COMUNE DI BRACCIANO

CITTA' METROPOLITANA DI ROMA CAPITALE

AREA OPERE ARCHITETTONICHE E BENI CULTURALI

LAVORI PER LA REALIZZAZIONE DI NUOVI LOCULI ED OPERE ACCESSORIE

PROGETTO ESECUTIVO

Il progettista:
RTP: ing. Pasquale Fusco (CAPOGRUPPO)
MANDANTE: geol. Giuseppe De Luca
MANDANTE: ing. Mario Elefante

Sede: via Dario Fiore 114 ex 78
80021 Afragola (NA), Italia
Tel: pbx/fax +39 081 8602065
E-mail: ing.pasqualefusco@gmail.com
PEC: pasquale.fusco.15834@ordingna.it

ORDINE DEGLI INGEGNERI DELLA PROVINCIA DI NAPOLI
Timbro e firma
DOTT. ING.
FUSCO PASQUALE
SEZIONE A
SETTORE CIVILE & AMBIENTALE - INDUSTRIALE - DELL'INFORMAZIONE
N° ISCRIZ.
15834
ing. Pasquale Fusco

Il Responsabile Unico del Procedimento
Arch. Cecilia Sodano

PROGETTO NUOVI LOCULI: FASCICOLO DEI CALCOLI	DATA EMISS. Marzo 2019	CODIFICA STR.08
	SCALA / FORMATO	

REVISIONE	DESCRIZIONE	DATA	APPROVATO DA
01	PRIMA EMISSIONE	MARZO 2019	
02			
03			
04			

Il presente documento è di proprietà di ing.P.Fusco. Si fa divieto a chiunque di riprodurlo o renderlo noto a terzi senza autorizzazione. Legge 22-4-41 n.633 art. 2575 e segg. C.C.

PRO_SAP

PROfessional Structural Analysis Program

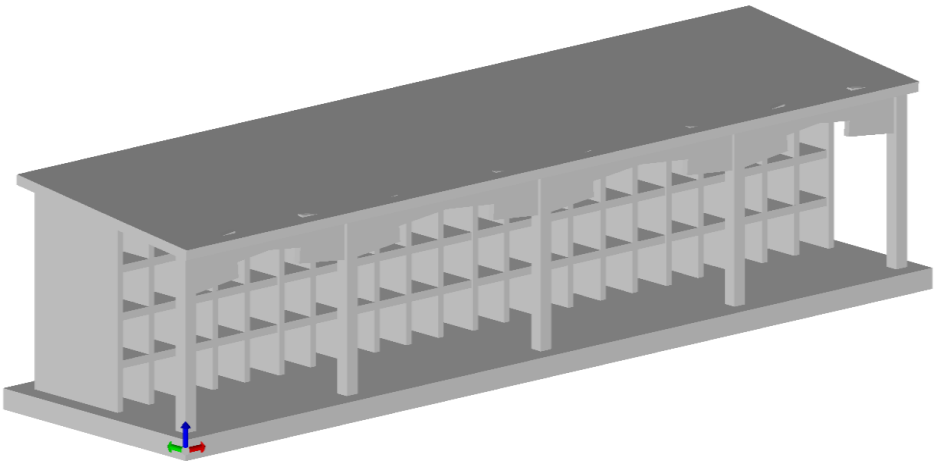

BLOCCO 1

2S.I. Software e Servizi per l'Ingegneria S.r.l.
Via Garibaldi, 90
44121 Ferrara FE (Italy)

Tel. +39 0532 200091

www.2si.it
info@2si.it

D.M. 17/01/18 cap. 10.2 Affidabilità dei codici utilizzati
https://www.2si.it/it/prodotti/affidabilita/

SCHEMA MODELLO ED ESPLOSO

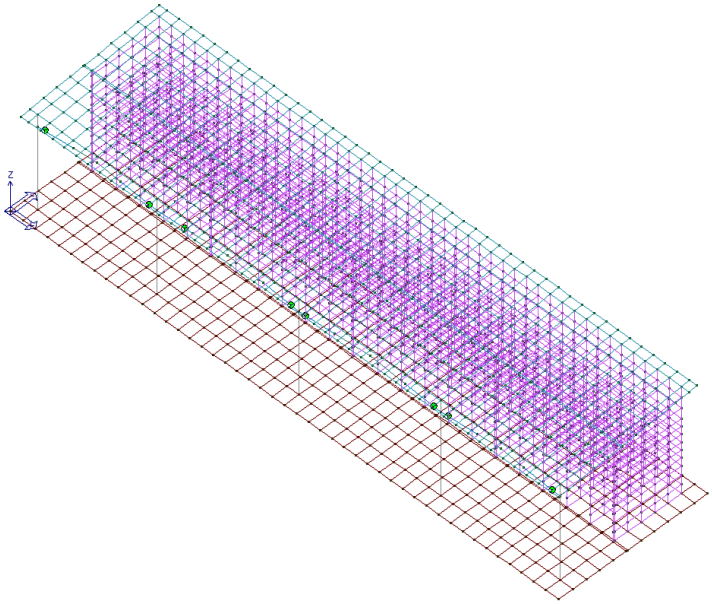

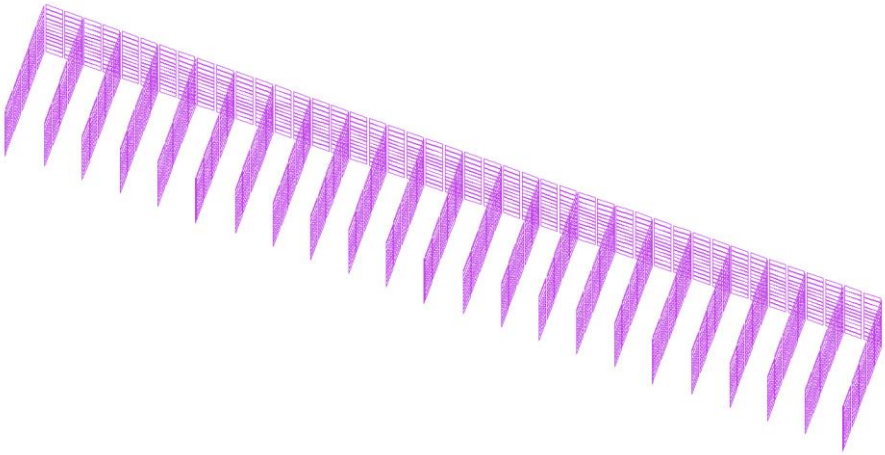

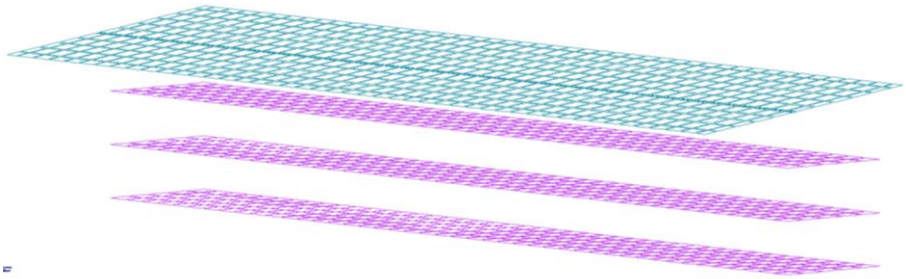

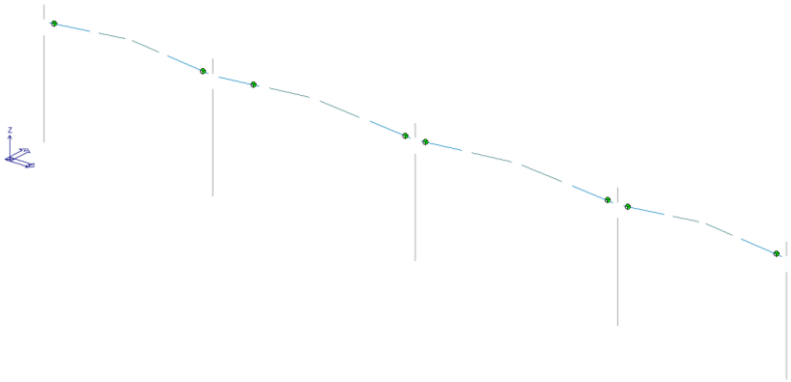

Descrizione generale dell'opera	
Fabbricato ad uso	Loculi ed ossari funerari
Ubicazione	Comune di BRACCIANO (RM) (Regione LAZIO)
	Località BRACCIANO (RM)
	Longitudine 12.168, Latitudine 42.108
Tipo di fondazione	diretta

Principali caratteristiche della struttura	
Struttura regolare in pianta	si
Struttura regolare in altezza	si
Classe di duttilità	bassa

Parametri della struttura			
Classe d'uso	Vita Vn [anni]	Coeff. Uso	Periodo Vr [anni]
III	50.0	1.5	75.0

Fattore di struttura/comportamento
1.5

Tipo di analisi strutturale	
Carichi verticali	SI
Sismica dinamica lineare	SI

Di seguito si indicano l'origine e le caratteristiche dei codici di calcolo utilizzati riportando titolo, produttore e distributore, versione, estremi della licenza d'uso:

Informazioni sul codice di calcolo	
Titolo:	PRO_SAP PROfessional Structural Analysis Program
Versione:	PROFESSIONAL (build 2019-01-184)
Produttore-Distributore:	2S.I. Software e Servizi per l'Ingegneria s.r.l., Ferrara
Dati utente finale:	ing.Pasquale Fusco
Codice Utente:	00152cli
Codice Licenza:	Licenza dsi3164

Un attento esame preliminare della documentazione a corredo del software ***ha consentito di valutarne l'affidabilità e soprattutto l'idoneità al caso specifico***. La documentazione, fornita dal produttore e distributore del software, contiene una esauriente descrizione delle basi teoriche e degli algoritmi impiegati, l'individuazione dei campi d'impiego, nonché casi prova interamente risolti e commentati, corredati dei file di input necessari a riprodurre l'elaborazione:

Affidabilità dei codici utilizzati	
2S.I. ha verificato l'affidabilità e la robustezza del codice di calcolo attraverso un numero significativo di casi prova in cui i risultati dell'analisi numerica sono stati confrontati con soluzioni teoriche.E' possibile reperire la documentazione contenente alcuni dei più significativi casi trattati al seguente link: http://www.2si.it/Software/Affidabilità.htm	
Modellazione della geometria e proprietà meccaniche:	
nodi	3384
elementi D2 (per aste, travi, pilastri…)	26
elementi D3 (per pareti, platee, gusci…)	3732
elementi solaio	0
elementi solidi	0
Dimensione del modello strutturale [cm]:	
X min =	-0.00
Xmax =	2100.00
Ymin =	-0.00
Ymax =	570.00
Zmin =	0.00
Zmax =	412.95
Strutture verticali:	
Elementi di tipo asta	NO
Pilastri	SI
Pareti	SI
Setti (a comportamento membranale)	NO
Strutture non verticali:	
Elementi di tipo asta	NO

Travi	SI
Gusci	SI
Membrane	NO
Orizzontamenti:	
Solai con la proprietà piano rigido	NO
Solai senza la proprietà piano rigido	NO
Tipo di vincoli:	
Nodi vincolati rigidamente	NO
Nodi vincolati elasticamente	NO
Nodi con isolatori sismici	NO
Fondazioni puntuali (plinti/plinti su palo)	NO
Fondazioni di tipo trave	NO
Fondazioni di tipo platea	SI
Fondazioni con elementi solidi	NO

CARATTERISTICHE MATERIALI UTILIZZATI

Il programma consente l'uso di materiali diversi. Sono previsti i seguenti tipi di materiale:

1	materiale tipo cemento armato

I materiali utilizzati nella modellazione sono individuati da una sigla identificativa ed un codice numerico (gli elementi strutturali richiamano quest'ultimo nella propria descrizione). Per ogni materiale vengono riportati in tabella i seguenti dati:

Young	modulo di elasticità normale E
Poisson	coefficiente di contrazione trasversale ni
G	modulo di elasticità tangenziale
Gamma	peso specifico
Alfa	coefficiente di dilatazione termica
Fattore di confidenza FC m	Fattore di confidenza specifico per materiale; (è riportato solo se diverso da quello globale della struttura)
Fattore di confidenza FC a	Fattore di confidenza specifico per l'armatura (è riportato solo se diverso da quello globale della struttura)
Elasto-plastico	Materiale elastico perfettamente plastico per aste non lineari
Massima compressione	Massima tensione di compressione per aste non lineari
Massima trazione	Massima tensione di trazione per aste non lineari
Fattore attrito	Coefficinete di attrito per aste non lineari
Rapporto HRDb	Rapporto di hardening a flessione
Rapporto HRDv	Rapporto di hardening a taglio

I dati soprariportati vengono utilizzati per la modellazione dello schema statico e per la determinazione dei carichi inerziali e termici. In relazione al tipo di materiale vengono riportati inoltre:

1	cemento armato		
		Resistenza Rc	resistenza a cmpressione cubica
		Resistenza fctm	resistenza media a trazione semplice
		Coefficiente ksb	Coefficiente di riduzione della resistenza a compressione da utilizzare nello stress block

Id	Tipo / Note	V. caratt.	V. medio	Young	Poisson	G	Gamma	Alfa	Altri
		daN/cm2	daN/cm2	daN/cm2		daN/cm2	daN/cm3		
1	Calcestruzzo Classe C25/30-Calcestruzzo Classe C25/30			3.145e+05	0.20	1.310e+05	2.50e-03	1.00e-05	
	Resistenza Rc	300.0							
	Resistenza fctm		25.6						
	Coefficiente ksb								0.85
	Rapporto HRDb								1.00e-05
	Rapporto HRDv								1.00e-05

MODELLAZIONE DELLE SEZIONI

LEGENDA TABELLA DATI SEZIONI

Il programma consente l'uso di sezioni diverse. Sono previsti i seguenti tipi di sezione:

1. sezione di tipo generico
2. profilati semplici
3. profilati accoppiati e speciali

Le sezioni utilizzate nella modellazione sono individuate da una sigla identificativa ed un codice numerico (gli elementi strutturali richiamano quest'ultimo nella propria descrizione). Per ogni sezione vengono riportati in tabella i seguenti dati:

Area	area della sezione
A V2	area della sezione/fattore di taglio (per il taglio in direzione 2)
A V3	area della sezione/fattore di taglio (per il taglio in direzione 3)
Jt	fattore torsionale di rigidezza
J2-2	momento d'inerzia della sezione riferito all'asse 2
J3-3	momento d'inerzia della sezione riferito all'asse 3
W2-2	modulo di resistenza della sezione riferito all'asse 2
W3-3	modulo di resistenza della sezione riferito all'asse 3
Wp2-2	modulo di resistenza plastico della sezione riferito all'asse 2
Wp3-3	modulo di resistenza plastico della sezione riferito all'asse 3

I dati sopra riportati vengono utilizzati per la determinazione dei carichi inerziali e per la definizione delle rigidezze degli elementi strutturali; qualora il valore di Area V2 (e/o Area V3) sia nullo la deformabilità per taglio V2 (e/o V3) è trascurata. La valutazione delle caratteristiche inerziali delle sezioni è condotta nel riferimento 2-3 dell'elemento.

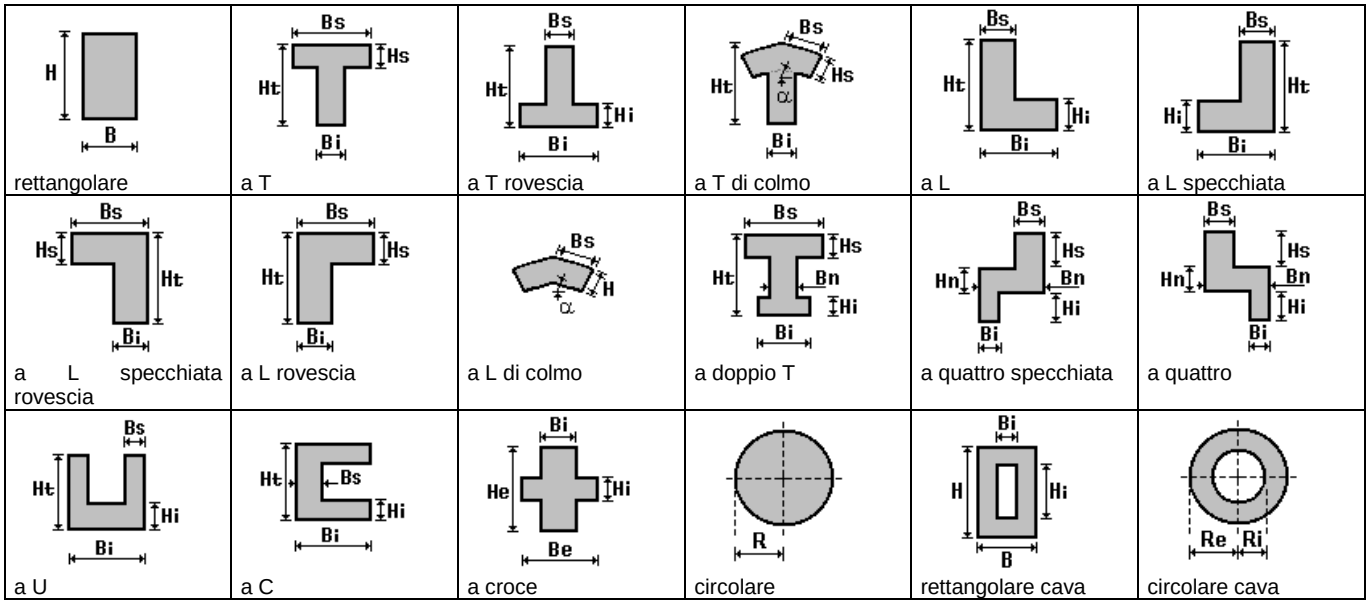

Per quanto concerne i profilati semplici ed accoppiati l'asse 2 del riferimento coincide con l'asse x riportato nei più diffusi profilatari.

Per quanto concerne le sezioni di tipo generico (tipo 1.):
i valori dimensionali con prefisso B sono riferiti all'asse 2
i valori dimensionali con prefisso H sono riferiti all'asse 3

Id	Tipo	Area	A V2	A V3	Jt	J 2-2	J 3-3	W 2-2	W 3-3	Wp 2-2	Wp 3-3
		cm2	cm2	cm2	cm4	cm4	cm4	cm3	cm3	cm3	cm3
1	Pil 30x30-Rettangolare: b=30 h=30	900.00	750.00	750.00	1.139e+05	6.750e+04	6.750e+04	4500.00	4500.00	6750.00	6750.00
2	trave 15x90-Rettangolare: b=15 h=90	1350.00	1125.00	1125.00	9.062e+04	2.531e+04	9.113e+05	3375.00	2.025e+04	5062.50	3.038e+04
3	trave 15x30-Rettangolare: b=15 h=30	450.00	375.00	375.00	2.312e+04	8437.50	3.375e+04	1125.00	2250.00	1687.50	3375.00

MODELLAZIONE STRUTTURA: ELEMENTI TRAVE

TABELLA DATI TRAVI

Il programma utilizza per la modellazione elementi a due nodi denominati in generale travi.
Ogni elemento trave è individuato dal nodo iniziale e dal nodo finale.
Ogni elemento è caratterizzato da un insieme di proprietà riportate in tabella che ne completano la modellazione.

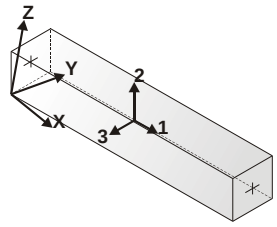

orientamento elementi 2D non verticali

orientamento elementi 2D verticali

In particolare per ogni elemento viene indicato in tabella:

Elem.	numero dell'elemento
Note	codice di comportamento: trave, trave di fondazione, pilastro, asta, asta tesa, asta compressa,
Nodo I (J)	numero del nodo iniziale (finale)
Mat.	codice del materiale assegnato all'elemento
Sez.	codice della sezione assegnata all'elemento
Rotaz.	valore della rotazione dell'elemento, attorno al proprio asse, nel caso in cui l'orientamento di default non sia adottabile; l'orientamento di default prevede per gli elementi non verticali l'asse 2 contenuto nel piano verticale e l'asse 3 orizzontale, per gli elementi verticali l'asse 2 diretto secondo X negativo e l'asse 3 diretto secondo Y negativo
Svincolo I (J)	codici di svincolo per le azioni interne; i primi sei codici si riferiscono al nodo iniziale, i restanti sei al nodo finale (il valore 1 indica che la relativa azione interna non è attiva)
Wink V	costante di sottofondo (coefficiente di Winkler) per la modellazione della trave su suolo elastico
Wink O	costante di sottofondo (coefficiente di Winkler) per la modellazione del suolo elastico orizzontale

Elem.	Note	Nodo I	Nodo J	Mat.	Sez.	Rotaz. gradi	Svincolo I	Svincolo J	Wink V daN/cm3	Wink O daN/cm3
1	Pilas.	49	2427	1	1					
2	Pilas.	59	2428	1	1					
3	Pilas.	71	2429	1	1					
4	Pilas.	83	2430	1	1					
5	Pilas.	93	2431	1	1					
6	Trave	2428	2597	1	2			000011		
7	Trave	2598	2429	1	2			000011		
8	Trave	2429	2599	1	2		000011			
9	Trave	2600	2430	1	2			000011		
10	Trave	2427	2601	1	2		000011			
11	Trave	2602	2428	1	2			000011		
12	Trave	2430	2603	1	2		000011			
13	Trave	2604	2431	1	2			000011		
14	Trave	2597	2606	1	3					
15	Trave	2606	2598	1	3					
16	Trave	2599	2607	1	3					
17	Trave	2607	2600	1	3					
18	Trave	2601	2605	1	3					
19	Trave	2605	2602	1	3					
20	Trave	2603	2608	1	3					
21	Trave	2608	2604	1	3					
22	Pilas.	2427	2657	1	1					
23	Pilas.	2428	2667	1	1					
24	Pilas.	2429	2679	1	1					
25	Pilas.	2430	2691	1	1					
26	Pilas.	2431	2701	1	1					

MODELLAZIONE STRUTTURA: ELEMENTI SHELL

LEGENDA TABELLA DATI SHELL

Il programma utilizza per la modellazione elementi a tre o quattro nodi denominati in generale shell.
Ogni elemento shell è individuato dai nodi I, J, K, L (L=I per gli elementi a tre nodi).
Ogni elemento è caratterizzato da un insieme di proprietà riportate in tabella che ne completano la modellazione.

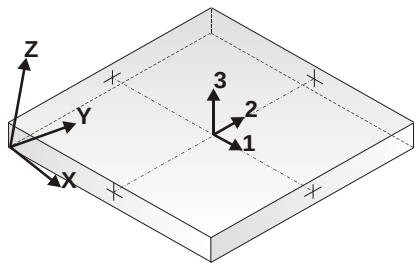

orientamento elementi 3D non verticali

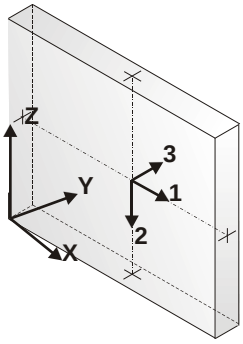

orientamento elementi 3D verticali

In particolare per ogni elemento viene indicato in tabella:

Elem.	numero dell'elemento
Note	codice di comportamento: *Guscio* (elemento guscio in elevazione non verticale) *Guscio fond.* (elemento guscio su suolo elastico) *Setto* (elemento guscio in elevazione verticale) *Membrana* (elemento guscio con comportamento membranale)
Nodo I (J, K, L)	numero del nodo I (J, K, L)
Mat.	codice del materiale assegnato all'elemento
Spessore	spessore dell'elemento (costante)
Wink V	costante di sottofondo (coefficiente di Winkler) per la modellazione del suolo elastico verticale
Wink O	costante di sottofondo (coefficiente di Winkler) per la modellazione del suolo elastico orizzontale

Elem.	Note	Nodo I	Nodo J	Nodo K	Nodo L	Mat.	Spessore	Svincolo	Wink V	Wink O
							cm		daN/cm3	daN/cm3
1	Guscio fond.	1	2	49	48	1	40.0		0.50	5.00
2	Guscio fond.	2	3	50	49	1	40.0		0.50	5.00
3	Guscio fond.	3	4	51	50	1	40.0		0.50	5.00
4	Guscio fond.	4	5	52	51	1	40.0		0.50	5.00
5	Guscio fond.	5	6	53	52	1	40.0		0.50	5.00
6	Guscio fond.	6	7	54	53	1	40.0		0.50	5.00
7	Guscio fond.	7	8	55	54	1	40.0		0.50	5.00
8	Guscio fond.	8	9	56	55	1	40.0		0.50	5.00
9	Guscio fond.	9	10	57	56	1	40.0		0.50	5.00
10	Guscio fond.	10	11	58	57	1	40.0		0.50	5.00
11	Guscio fond.	11	12	59	58	1	40.0		0.50	5.00
12	Guscio fond.	12	13	60	59	1	40.0		0.50	5.00
13	Guscio fond.	13	14	61	60	1	40.0		0.50	5.00
14	Guscio fond.	14	15	62	61	1	40.0		0.50	5.00
15	Guscio fond.	15	16	63	62	1	40.0		0.50	5.00
16	Guscio fond.	16	17	64	63	1	40.0		0.50	5.00
17	Guscio fond.	17	18	65	64	1	40.0		0.50	5.00
18	Guscio fond.	18	19	66	65	1	40.0		0.50	5.00
19	Guscio fond.	19	20	67	66	1	40.0		0.50	5.00
20	Guscio fond.	20	21	68	67	1	40.0		0.50	5.00
21	Guscio fond.	21	22	69	68	1	40.0		0.50	5.00
22	Guscio fond.	22	23	70	69	1	40.0		0.50	5.00
23	Guscio fond.	23	24	71	70	1	40.0		0.50	5.00
24	Guscio fond.	24	25	72	71	1	40.0		0.50	5.00
25	Guscio fond.	25	26	73	72	1	40.0		0.50	5.00
26	Guscio fond.	26	27	74	73	1	40.0		0.50	5.00
27	Guscio fond.	27	28	75	74	1	40.0		0.50	5.00
28	Guscio fond.	28	29	76	75	1	40.0		0.50	5.00
29	Guscio fond.	29	30	77	76	1	40.0		0.50	5.00
30	Guscio fond.	30	31	78	77	1	40.0		0.50	5.00
31	Guscio fond.	31	32	79	78	1	40.0		0.50	5.00
32	Guscio fond.	32	33	80	79	1	40.0		0.50	5.00
33	Guscio fond.	33	34	81	80	1	40.0		0.50	5.00
34	Guscio fond.	34	35	82	81	1	40.0		0.50	5.00

35	Guscio fond.	35	36	83	82	1	40.0	0.50	5.00
36	Guscio fond.	36	37	84	83	1	40.0	0.50	5.00
37	Guscio fond.	37	38	85	84	1	40.0	0.50	5.00
38	Guscio fond.	38	39	86	85	1	40.0	0.50	5.00
39	Guscio fond.	39	40	87	86	1	40.0	0.50	5.00
40	Guscio fond.	40	41	88	87	1	40.0	0.50	5.00
41	Guscio fond.	41	42	89	88	1	40.0	0.50	5.00
42	Guscio fond.	42	43	90	89	1	40.0	0.50	5.00
43	Guscio fond.	43	44	91	90	1	40.0	0.50	5.00
44	Guscio fond.	44	45	92	91	1	40.0	0.50	5.00
45	Guscio fond.	45	46	93	92	1	40.0	0.50	5.00
46	Guscio fond.	46	47	94	93	1	40.0	0.50	5.00
47	Guscio fond.	48	49	96	95	1	40.0	0.50	5.00
48	Guscio fond.	49	50	97	96	1	40.0	0.50	5.00
49	Guscio fond.	50	51	98	97	1	40.0	0.50	5.00
50	Guscio fond.	51	52	99	98	1	40.0	0.50	5.00
51	Guscio fond.	52	53	100	99	1	40.0	0.50	5.00
52	Guscio fond.	53	54	101	100	1	40.0	0.50	5.00
53	Guscio fond.	54	55	102	101	1	40.0	0.50	5.00
54	Guscio fond.	55	56	103	102	1	40.0	0.50	5.00
55	Guscio fond.	56	57	104	103	1	40.0	0.50	5.00
56	Guscio fond.	57	58	105	104	1	40.0	0.50	5.00
57	Guscio fond.	58	59	106	105	1	40.0	0.50	5.00
58	Guscio fond.	59	60	107	106	1	40.0	0.50	5.00
59	Guscio fond.	60	61	108	107	1	40.0	0.50	5.00
60	Guscio fond.	61	62	109	108	1	40.0	0.50	5.00
61	Guscio fond.	62	63	110	109	1	40.0	0.50	5.00
62	Guscio fond.	63	64	111	110	1	40.0	0.50	5.00
63	Guscio fond.	64	65	112	111	1	40.0	0.50	5.00
64	Guscio fond.	65	66	113	112	1	40.0	0.50	5.00
65	Guscio fond.	66	67	114	113	1	40.0	0.50	5.00
66	Guscio fond.	67	68	115	114	1	40.0	0.50	5.00
67	Guscio fond.	68	69	116	115	1	40.0	0.50	5.00
68	Guscio fond.	69	70	117	116	1	40.0	0.50	5.00
69	Guscio fond.	70	71	118	117	1	40.0	0.50	5.00
70	Guscio fond.	71	72	119	118	1	40.0	0.50	5.00
71	Guscio fond.	72	73	120	119	1	40.0	0.50	5.00
72	Guscio fond.	73	74	121	120	1	40.0	0.50	5.00
73	Guscio fond.	74	75	122	121	1	40.0	0.50	5.00
74	Guscio fond.	75	76	123	122	1	40.0	0.50	5.00
75	Guscio fond.	76	77	124	123	1	40.0	0.50	5.00
76	Guscio fond.	77	78	125	124	1	40.0	0.50	5.00
77	Guscio fond.	78	79	126	125	1	40.0	0.50	5.00
78	Guscio fond.	79	80	127	126	1	40.0	0.50	5.00
79	Guscio fond.	80	81	128	127	1	40.0	0.50	5.00
80	Guscio fond.	81	82	129	128	1	40.0	0.50	5.00
81	Guscio fond.	82	83	130	129	1	40.0	0.50	5.00
82	Guscio fond.	83	84	131	130	1	40.0	0.50	5.00
83	Guscio fond.	84	85	132	131	1	40.0	0.50	5.00
84	Guscio fond.	85	86	133	132	1	40.0	0.50	5.00
85	Guscio fond.	86	87	134	133	1	40.0	0.50	5.00
86	Guscio fond.	87	88	135	134	1	40.0	0.50	5.00
87	Guscio fond.	88	89	136	135	1	40.0	0.50	5.00
88	Guscio fond.	89	90	137	136	1	40.0	0.50	5.00
89	Guscio fond.	90	91	138	137	1	40.0	0.50	5.00
90	Guscio fond.	91	92	139	138	1	40.0	0.50	5.00
91	Guscio fond.	92	93	140	139	1	40.0	0.50	5.00
92	Guscio fond.	93	94	141	140	1	40.0	0.50	5.00
93	Guscio fond.	95	96	143	142	1	40.0	0.50	5.00
94	Guscio fond.	96	97	144	143	1	40.0	0.50	5.00
95	Guscio fond.	97	98	145	144	1	40.0	0.50	5.00
96	Guscio fond.	98	99	146	145	1	40.0	0.50	5.00
97	Guscio fond.	99	100	147	146	1	40.0	0.50	5.00
98	Guscio fond.	100	101	148	147	1	40.0	0.50	5.00
99	Guscio fond.	101	102	149	148	1	40.0	0.50	5.00
100	Guscio fond.	102	103	150	149	1	40.0	0.50	5.00
101	Guscio fond.	103	104	151	150	1	40.0	0.50	5.00
102	Guscio fond.	104	105	152	151	1	40.0	0.50	5.00
103	Guscio fond.	105	106	153	152	1	40.0	0.50	5.00
104	Guscio fond.	106	107	154	153	1	40.0	0.50	5.00
105	Guscio fond.	107	108	155	154	1	40.0	0.50	5.00
106	Guscio fond.	108	109	156	155	1	40.0	0.50	5.00
107	Guscio fond.	109	110	157	156	1	40.0	0.50	5.00
108	Guscio fond.	110	111	158	157	1	40.0	0.50	5.00
109	Guscio fond.	111	112	159	158	1	40.0	0.50	5.00
110	Guscio fond.	112	113	160	159	1	40.0	0.50	5.00
111	Guscio fond.	113	114	161	160	1	40.0	0.50	5.00
112	Guscio fond.	114	115	162	161	1	40.0	0.50	5.00

113	Guscio fond.	115	116	163	162	1	40.0	0.50	5.00
114	Guscio fond.	116	117	164	163	1	40.0	0.50	5.00
115	Guscio fond.	117	118	165	164	1	40.0	0.50	5.00
116	Guscio fond.	118	119	166	165	1	40.0	0.50	5.00
117	Guscio fond.	119	120	167	166	1	40.0	0.50	5.00
118	Guscio fond.	120	121	168	167	1	40.0	0.50	5.00
119	Guscio fond.	121	122	169	168	1	40.0	0.50	5.00
120	Guscio fond.	122	123	170	169	1	40.0	0.50	5.00
121	Guscio fond.	123	124	171	170	1	40.0	0.50	5.00
122	Guscio fond.	124	125	172	171	1	40.0	0.50	5.00
123	Guscio fond.	125	126	173	172	1	40.0	0.50	5.00
124	Guscio fond.	126	127	174	173	1	40.0	0.50	5.00
125	Guscio fond.	127	128	175	174	1	40.0	0.50	5.00
126	Guscio fond.	128	129	176	175	1	40.0	0.50	5.00
127	Guscio fond.	129	130	177	176	1	40.0	0.50	5.00
128	Guscio fond.	130	131	178	177	1	40.0	0.50	5.00
129	Guscio fond.	131	132	179	178	1	40.0	0.50	5.00
130	Guscio fond.	132	133	180	179	1	40.0	0.50	5.00
131	Guscio fond.	133	134	181	180	1	40.0	0.50	5.00
132	Guscio fond.	134	135	182	181	1	40.0	0.50	5.00
133	Guscio fond.	135	136	183	182	1	40.0	0.50	5.00
134	Guscio fond.	136	137	184	183	1	40.0	0.50	5.00
135	Guscio fond.	137	138	185	184	1	40.0	0.50	5.00
136	Guscio fond.	138	139	186	185	1	40.0	0.50	5.00
137	Guscio fond.	139	140	187	186	1	40.0	0.50	5.00
138	Guscio fond.	140	141	188	187	1	40.0	0.50	5.00
139	Guscio fond.	142	143	190	189	1	40.0	0.50	5.00
140	Guscio fond.	143	144	191	190	1	40.0	0.50	5.00
141	Guscio fond.	144	145	192	191	1	40.0	0.50	5.00
142	Guscio fond.	145	146	193	192	1	40.0	0.50	5.00
143	Guscio fond.	146	147	194	193	1	40.0	0.50	5.00
144	Guscio fond.	147	148	195	194	1	40.0	0.50	5.00
145	Guscio fond.	148	149	196	195	1	40.0	0.50	5.00
146	Guscio fond.	149	150	197	196	1	40.0	0.50	5.00
147	Guscio fond.	150	151	198	197	1	40.0	0.50	5.00
148	Guscio fond.	151	152	199	198	1	40.0	0.50	5.00
149	Guscio fond.	152	153	200	199	1	40.0	0.50	5.00
150	Guscio fond.	153	154	201	200	1	40.0	0.50	5.00
151	Guscio fond.	154	155	202	201	1	40.0	0.50	5.00
152	Guscio fond.	155	156	203	202	1	40.0	0.50	5.00
153	Guscio fond.	156	157	204	203	1	40.0	0.50	5.00
154	Guscio fond.	157	158	205	204	1	40.0	0.50	5.00
155	Guscio fond.	158	159	206	205	1	40.0	0.50	5.00
156	Guscio fond.	159	160	207	206	1	40.0	0.50	5.00
157	Guscio fond.	160	161	208	207	1	40.0	0.50	5.00
158	Guscio fond.	161	162	209	208	1	40.0	0.50	5.00
159	Guscio fond.	162	163	210	209	1	40.0	0.50	5.00
160	Guscio fond.	163	164	211	210	1	40.0	0.50	5.00
161	Guscio fond.	164	165	212	211	1	40.0	0.50	5.00
162	Guscio fond.	165	166	213	212	1	40.0	0.50	5.00
163	Guscio fond.	166	167	214	213	1	40.0	0.50	5.00
164	Guscio fond.	167	168	215	214	1	40.0	0.50	5.00
165	Guscio fond.	168	169	216	215	1	40.0	0.50	5.00
166	Guscio fond.	169	170	217	216	1	40.0	0.50	5.00
167	Guscio fond.	170	171	218	217	1	40.0	0.50	5.00
168	Guscio fond.	171	172	219	218	1	40.0	0.50	5.00
169	Guscio fond.	172	173	220	219	1	40.0	0.50	5.00
170	Guscio fond.	173	174	221	220	1	40.0	0.50	5.00
171	Guscio fond.	174	175	222	221	1	40.0	0.50	5.00
172	Guscio fond.	175	176	223	222	1	40.0	0.50	5.00
173	Guscio fond.	176	177	224	223	1	40.0	0.50	5.00
174	Guscio fond.	177	178	225	224	1	40.0	0.50	5.00
175	Guscio fond.	178	179	226	225	1	40.0	0.50	5.00
176	Guscio fond.	179	180	227	226	1	40.0	0.50	5.00
177	Guscio fond.	180	181	228	227	1	40.0	0.50	5.00
178	Guscio fond.	181	182	229	228	1	40.0	0.50	5.00
179	Guscio fond.	182	183	230	229	1	40.0	0.50	5.00
180	Guscio fond.	183	184	231	230	1	40.0	0.50	5.00
181	Guscio fond.	184	185	232	231	1	40.0	0.50	5.00
182	Guscio fond.	185	186	233	232	1	40.0	0.50	5.00
183	Guscio fond.	186	187	234	233	1	40.0	0.50	5.00
184	Guscio fond.	187	188	235	234	1	40.0	0.50	5.00
185	Guscio fond.	189	190	237	236	1	40.0	0.50	5.00
186	Guscio fond.	190	191	238	237	1	40.0	0.50	5.00
187	Guscio fond.	191	192	239	238	1	40.0	0.50	5.00
188	Guscio fond.	192	193	240	239	1	40.0	0.50	5.00
189	Guscio fond.	193	194	241	240	1	40.0	0.50	5.00
190	Guscio fond.	194	195	242	241	1	40.0	0.50	5.00

191	Guscio fond.	195	196	243	242	1	40.0	0.50	5.00
192	Guscio fond.	196	197	244	243	1	40.0	0.50	5.00
193	Guscio fond.	197	198	245	244	1	40.0	0.50	5.00
194	Guscio fond.	198	199	246	245	1	40.0	0.50	5.00
195	Guscio fond.	199	200	247	246	1	40.0	0.50	5.00
196	Guscio fond.	200	201	248	247	1	40.0	0.50	5.00
197	Guscio fond.	201	202	249	248	1	40.0	0.50	5.00
198	Guscio fond.	202	203	250	249	1	40.0	0.50	5.00
199	Guscio fond.	203	204	251	250	1	40.0	0.50	5.00
200	Guscio fond.	204	205	252	251	1	40.0	0.50	5.00
201	Guscio fond.	205	206	253	252	1	40.0	0.50	5.00
202	Guscio fond.	206	207	254	253	1	40.0	0.50	5.00
203	Guscio fond.	207	208	255	254	1	40.0	0.50	5.00
204	Guscio fond.	208	209	256	255	1	40.0	0.50	5.00
205	Guscio fond.	209	210	257	256	1	40.0	0.50	5.00
206	Guscio fond.	210	211	258	257	1	40.0	0.50	5.00
207	Guscio fond.	211	212	259	258	1	40.0	0.50	5.00
208	Guscio fond.	212	213	260	259	1	40.0	0.50	5.00
209	Guscio fond.	213	214	261	260	1	40.0	0.50	5.00
210	Guscio fond.	214	215	262	261	1	40.0	0.50	5.00
211	Guscio fond.	215	216	263	262	1	40.0	0.50	5.00
212	Guscio fond.	216	217	264	263	1	40.0	0.50	5.00
213	Guscio fond.	217	218	265	264	1	40.0	0.50	5.00
214	Guscio fond.	218	219	266	265	1	40.0	0.50	5.00
215	Guscio fond.	219	220	267	266	1	40.0	0.50	5.00
216	Guscio fond.	220	221	268	267	1	40.0	0.50	5.00
217	Guscio fond.	221	222	269	268	1	40.0	0.50	5.00
218	Guscio fond.	222	223	270	269	1	40.0	0.50	5.00
219	Guscio fond.	223	224	271	270	1	40.0	0.50	5.00
220	Guscio fond.	224	225	272	271	1	40.0	0.50	5.00
221	Guscio fond.	225	226	273	272	1	40.0	0.50	5.00
222	Guscio fond.	226	227	274	273	1	40.0	0.50	5.00
223	Guscio fond.	227	228	275	274	1	40.0	0.50	5.00
224	Guscio fond.	228	229	276	275	1	40.0	0.50	5.00
225	Guscio fond.	229	230	277	276	1	40.0	0.50	5.00
226	Guscio fond.	230	231	278	277	1	40.0	0.50	5.00
227	Guscio fond.	231	232	279	278	1	40.0	0.50	5.00
228	Guscio fond.	232	233	280	279	1	40.0	0.50	5.00
229	Guscio fond.	233	234	281	280	1	40.0	0.50	5.00
230	Guscio fond.	234	235	282	281	1	40.0	0.50	5.00
231	Guscio fond.	236	237	284	283	1	40.0	0.50	5.00
232	Guscio fond.	237	238	285	284	1	40.0	0.50	5.00
233	Guscio fond.	238	239	286	285	1	40.0	0.50	5.00
234	Guscio fond.	239	240	287	286	1	40.0	0.50	5.00
235	Guscio fond.	240	241	288	287	1	40.0	0.50	5.00
236	Guscio fond.	241	242	289	288	1	40.0	0.50	5.00
237	Guscio fond.	242	243	290	289	1	40.0	0.50	5.00
238	Guscio fond.	243	244	291	290	1	40.0	0.50	5.00
239	Guscio fond.	244	245	292	291	1	40.0	0.50	5.00
240	Guscio fond.	245	246	293	292	1	40.0	0.50	5.00
241	Guscio fond.	246	247	294	293	1	40.0	0.50	5.00
242	Guscio fond.	247	248	295	294	1	40.0	0.50	5.00
243	Guscio fond.	248	249	296	295	1	40.0	0.50	5.00
244	Guscio fond.	249	250	297	296	1	40.0	0.50	5.00
245	Guscio fond.	250	251	298	297	1	40.0	0.50	5.00
246	Guscio fond.	251	252	299	298	1	40.0	0.50	5.00
247	Guscio fond.	252	253	300	299	1	40.0	0.50	5.00
248	Guscio fond.	253	254	301	300	1	40.0	0.50	5.00
249	Guscio fond.	254	255	302	301	1	40.0	0.50	5.00
250	Guscio fond.	255	256	303	302	1	40.0	0.50	5.00
251	Guscio fond.	256	257	304	303	1	40.0	0.50	5.00
252	Guscio fond.	257	258	305	304	1	40.0	0.50	5.00
253	Guscio fond.	258	259	306	305	1	40.0	0.50	5.00
254	Guscio fond.	259	260	307	306	1	40.0	0.50	5.00
255	Guscio fond.	260	261	308	307	1	40.0	0.50	5.00
256	Guscio fond.	261	262	309	308	1	40.0	0.50	5.00
257	Guscio fond.	262	263	310	309	1	40.0	0.50	5.00
258	Guscio fond.	263	264	311	310	1	40.0	0.50	5.00
259	Guscio fond.	264	265	312	311	1	40.0	0.50	5.00
260	Guscio fond.	265	266	313	312	1	40.0	0.50	5.00
261	Guscio fond.	266	267	314	313	1	40.0	0.50	5.00
262	Guscio fond.	267	268	315	314	1	40.0	0.50	5.00
263	Guscio fond.	268	269	316	315	1	40.0	0.50	5.00
264	Guscio fond.	269	270	317	316	1	40.0	0.50	5.00
265	Guscio fond.	270	271	318	317	1	40.0	0.50	5.00
266	Guscio fond.	271	272	319	318	1	40.0	0.50	5.00
267	Guscio fond.	272	273	320	319	1	40.0	0.50	5.00
268	Guscio fond.	273	274	321	320	1	40.0	0.50	5.00

269	Guscio fond.	274	275	322	321	1	40.0	0.50	5.00
270	Guscio fond.	275	276	323	322	1	40.0	0.50	5.00
271	Guscio fond.	276	277	324	323	1	40.0	0.50	5.00
272	Guscio fond.	277	278	325	324	1	40.0	0.50	5.00
273	Guscio fond.	278	279	326	325	1	40.0	0.50	5.00
274	Guscio fond.	279	280	327	326	1	40.0	0.50	5.00
275	Guscio fond.	280	281	328	327	1	40.0	0.50	5.00
276	Guscio fond.	281	282	329	328	1	40.0	0.50	5.00
277	Guscio fond.	283	284	331	330	1	40.0	0.50	5.00
278	Guscio fond.	284	285	332	331	1	40.0	0.50	5.00
279	Guscio fond.	285	286	333	332	1	40.0	0.50	5.00
280	Guscio fond.	286	287	334	333	1	40.0	0.50	5.00
281	Guscio fond.	287	288	335	334	1	40.0	0.50	5.00
282	Guscio fond.	288	289	336	335	1	40.0	0.50	5.00
283	Guscio fond.	289	290	337	336	1	40.0	0.50	5.00
284	Guscio fond.	290	291	338	337	1	40.0	0.50	5.00
285	Guscio fond.	291	292	339	338	1	40.0	0.50	5.00
286	Guscio fond.	292	293	340	339	1	40.0	0.50	5.00
287	Guscio fond.	293	294	341	340	1	40.0	0.50	5.00
288	Guscio fond.	294	295	342	341	1	40.0	0.50	5.00
289	Guscio fond.	295	296	343	342	1	40.0	0.50	5.00
290	Guscio fond.	296	297	344	343	1	40.0	0.50	5.00
291	Guscio fond.	297	298	345	344	1	40.0	0.50	5.00
292	Guscio fond.	298	299	346	345	1	40.0	0.50	5.00
293	Guscio fond.	299	300	347	346	1	40.0	0.50	5.00
294	Guscio fond.	300	301	348	347	1	40.0	0.50	5.00
295	Guscio fond.	301	302	349	348	1	40.0	0.50	5.00
296	Guscio fond.	302	303	350	349	1	40.0	0.50	5.00
297	Guscio fond.	303	304	351	350	1	40.0	0.50	5.00
298	Guscio fond.	304	305	352	351	1	40.0	0.50	5.00
299	Guscio fond.	305	306	353	352	1	40.0	0.50	5.00
300	Guscio fond.	306	307	354	353	1	40.0	0.50	5.00
301	Guscio fond.	307	308	355	354	1	40.0	0.50	5.00
302	Guscio fond.	308	309	356	355	1	40.0	0.50	5.00
303	Guscio fond.	309	310	357	356	1	40.0	0.50	5.00
304	Guscio fond.	310	311	358	357	1	40.0	0.50	5.00
305	Guscio fond.	311	312	359	358	1	40.0	0.50	5.00
306	Guscio fond.	312	313	360	359	1	40.0	0.50	5.00
307	Guscio fond.	313	314	361	360	1	40.0	0.50	5.00
308	Guscio fond.	314	315	362	361	1	40.0	0.50	5.00
309	Guscio fond.	315	316	363	362	1	40.0	0.50	5.00
310	Guscio fond.	316	317	364	363	1	40.0	0.50	5.00
311	Guscio fond.	317	318	365	364	1	40.0	0.50	5.00
312	Guscio fond.	318	319	366	365	1	40.0	0.50	5.00
313	Guscio fond.	319	320	367	366	1	40.0	0.50	5.00
314	Guscio fond.	320	321	368	367	1	40.0	0.50	5.00
315	Guscio fond.	321	322	369	368	1	40.0	0.50	5.00
316	Guscio fond.	322	323	370	369	1	40.0	0.50	5.00
317	Guscio fond.	323	324	371	370	1	40.0	0.50	5.00
318	Guscio fond.	324	325	372	371	1	40.0	0.50	5.00
319	Guscio fond.	325	326	373	372	1	40.0	0.50	5.00
320	Guscio fond.	326	327	374	373	1	40.0	0.50	5.00
321	Guscio fond.	327	328	375	374	1	40.0	0.50	5.00
322	Guscio fond.	328	329	376	375	1	40.0	0.50	5.00
323	Guscio fond.	330	331	378	377	1	40.0	0.50	5.00
324	Guscio fond.	331	332	379	378	1	40.0	0.50	5.00
325	Guscio fond.	332	333	380	379	1	40.0	0.50	5.00
326	Guscio fond.	333	334	381	380	1	40.0	0.50	5.00
327	Guscio fond.	334	335	382	381	1	40.0	0.50	5.00
328	Guscio fond.	335	336	383	382	1	40.0	0.50	5.00
329	Guscio fond.	336	337	384	383	1	40.0	0.50	5.00
330	Guscio fond.	337	338	385	384	1	40.0	0.50	5.00
331	Guscio fond.	338	339	386	385	1	40.0	0.50	5.00
332	Guscio fond.	339	340	387	386	1	40.0	0.50	5.00
333	Guscio fond.	340	341	388	387	1	40.0	0.50	5.00
334	Guscio fond.	341	342	389	388	1	40.0	0.50	5.00
335	Guscio fond.	342	343	390	389	1	40.0	0.50	5.00
336	Guscio fond.	343	344	391	390	1	40.0	0.50	5.00
337	Guscio fond.	344	345	392	391	1	40.0	0.50	5.00
338	Guscio fond.	345	346	393	392	1	40.0	0.50	5.00
339	Guscio fond.	346	347	394	393	1	40.0	0.50	5.00
340	Guscio fond.	347	348	395	394	1	40.0	0.50	5.00
341	Guscio fond.	348	349	396	395	1	40.0	0.50	5.00
342	Guscio fond.	349	350	397	396	1	40.0	0.50	5.00
343	Guscio fond.	350	351	398	397	1	40.0	0.50	5.00
344	Guscio fond.	351	352	399	398	1	40.0	0.50	5.00
345	Guscio fond.	352	353	400	399	1	40.0	0.50	5.00
346	Guscio fond.	353	354	401	400	1	40.0	0.50	5.00

347	Guscio fond.	354	355	402	401	1	40.0	0.50	5.00
348	Guscio fond.	355	356	403	402	1	40.0	0.50	5.00
349	Guscio fond.	356	357	404	403	1	40.0	0.50	5.00
350	Guscio fond.	357	358	405	404	1	40.0	0.50	5.00
351	Guscio fond.	358	359	406	405	1	40.0	0.50	5.00
352	Guscio fond.	359	360	407	406	1	40.0	0.50	5.00
353	Guscio fond.	360	361	408	407	1	40.0	0.50	5.00
354	Guscio fond.	361	362	409	408	1	40.0	0.50	5.00
355	Guscio fond.	362	363	410	409	1	40.0	0.50	5.00
356	Guscio fond.	363	364	411	410	1	40.0	0.50	5.00
357	Guscio fond.	364	365	412	411	1	40.0	0.50	5.00
358	Guscio fond.	365	366	413	412	1	40.0	0.50	5.00
359	Guscio fond.	366	367	414	413	1	40.0	0.50	5.00
360	Guscio fond.	367	368	415	414	1	40.0	0.50	5.00
361	Guscio fond.	368	369	416	415	1	40.0	0.50	5.00
362	Guscio fond.	369	370	417	416	1	40.0	0.50	5.00
363	Guscio fond.	370	371	418	417	1	40.0	0.50	5.00
364	Guscio fond.	371	372	419	418	1	40.0	0.50	5.00
365	Guscio fond.	372	373	420	419	1	40.0	0.50	5.00
366	Guscio fond.	373	374	421	420	1	40.0	0.50	5.00
367	Guscio fond.	374	375	422	421	1	40.0	0.50	5.00
368	Guscio fond.	375	376	423	422	1	40.0	0.50	5.00
369	Guscio fond.	377	378	425	424	1	40.0	0.50	5.00
370	Guscio fond.	378	379	426	425	1	40.0	0.50	5.00
371	Guscio fond.	379	380	427	426	1	40.0	0.50	5.00
372	Guscio fond.	380	381	428	427	1	40.0	0.50	5.00
373	Guscio fond.	381	382	429	428	1	40.0	0.50	5.00
374	Guscio fond.	382	383	430	429	1	40.0	0.50	5.00
375	Guscio fond.	383	384	431	430	1	40.0	0.50	5.00
376	Guscio fond.	384	385	432	431	1	40.0	0.50	5.00
377	Guscio fond.	385	386	433	432	1	40.0	0.50	5.00
378	Guscio fond.	386	387	434	433	1	40.0	0.50	5.00
379	Guscio fond.	387	388	435	434	1	40.0	0.50	5.00
380	Guscio fond.	388	389	436	435	1	40.0	0.50	5.00
381	Guscio fond.	389	390	437	436	1	40.0	0.50	5.00
382	Guscio fond.	390	391	438	437	1	40.0	0.50	5.00
383	Guscio fond.	391	392	439	438	1	40.0	0.50	5.00
384	Guscio fond.	392	393	440	439	1	40.0	0.50	5.00
385	Guscio fond.	393	394	441	440	1	40.0	0.50	5.00
386	Guscio fond.	394	395	442	441	1	40.0	0.50	5.00
387	Guscio fond.	395	396	443	442	1	40.0	0.50	5.00
388	Guscio fond.	396	397	444	443	1	40.0	0.50	5.00
389	Guscio fond.	397	398	445	444	1	40.0	0.50	5.00
390	Guscio fond.	398	399	446	445	1	40.0	0.50	5.00
391	Guscio fond.	399	400	447	446	1	40.0	0.50	5.00
392	Guscio fond.	400	401	448	447	1	40.0	0.50	5.00
393	Guscio fond.	401	402	449	448	1	40.0	0.50	5.00
394	Guscio fond.	402	403	450	449	1	40.0	0.50	5.00
395	Guscio fond.	403	404	451	450	1	40.0	0.50	5.00
396	Guscio fond.	404	405	452	451	1	40.0	0.50	5.00
397	Guscio fond.	405	406	453	452	1	40.0	0.50	5.00
398	Guscio fond.	406	407	454	453	1	40.0	0.50	5.00
399	Guscio fond.	407	408	455	454	1	40.0	0.50	5.00
400	Guscio fond.	408	409	456	455	1	40.0	0.50	5.00
401	Guscio fond.	409	410	457	456	1	40.0	0.50	5.00
402	Guscio fond.	410	411	458	457	1	40.0	0.50	5.00
403	Guscio fond.	411	412	459	458	1	40.0	0.50	5.00
404	Guscio fond.	412	413	460	459	1	40.0	0.50	5.00
405	Guscio fond.	413	414	461	460	1	40.0	0.50	5.00
406	Guscio fond.	414	415	462	461	1	40.0	0.50	5.00
407	Guscio fond.	415	416	463	462	1	40.0	0.50	5.00
408	Guscio fond.	416	417	464	463	1	40.0	0.50	5.00
409	Guscio fond.	417	418	465	464	1	40.0	0.50	5.00
410	Guscio fond.	418	419	466	465	1	40.0	0.50	5.00
411	Guscio fond.	419	420	467	466	1	40.0	0.50	5.00
412	Guscio fond.	420	421	468	467	1	40.0	0.50	5.00
413	Guscio fond.	421	422	469	468	1	40.0	0.50	5.00
414	Guscio fond.	422	423	470	469	1	40.0	0.50	5.00
415	Guscio fond.	424	425	472	471	1	40.0	0.50	5.00
416	Guscio fond.	425	426	473	472	1	40.0	0.50	5.00
417	Guscio fond.	426	427	474	473	1	40.0	0.50	5.00
418	Guscio fond.	427	428	475	474	1	40.0	0.50	5.00
419	Guscio fond.	428	429	476	475	1	40.0	0.50	5.00
420	Guscio fond.	429	430	477	476	1	40.0	0.50	5.00
421	Guscio fond.	430	431	478	477	1	40.0	0.50	5.00
422	Guscio fond.	431	432	479	478	1	40.0	0.50	5.00
423	Guscio fond.	432	433	480	479	1	40.0	0.50	5.00
424	Guscio fond.	433	434	481	480	1	40.0	0.50	5.00

425	Guscio fond.	434	435	482	481	1	40.0	0.50	5.00
426	Guscio fond.	435	436	483	482	1	40.0	0.50	5.00
427	Guscio fond.	436	437	484	483	1	40.0	0.50	5.00
428	Guscio fond.	437	438	485	484	1	40.0	0.50	5.00
429	Guscio fond.	438	439	486	485	1	40.0	0.50	5.00
430	Guscio fond.	439	440	487	486	1	40.0	0.50	5.00
431	Guscio fond.	440	441	488	487	1	40.0	0.50	5.00
432	Guscio fond.	441	442	489	488	1	40.0	0.50	5.00
433	Guscio fond.	442	443	490	489	1	40.0	0.50	5.00
434	Guscio fond.	443	444	491	490	1	40.0	0.50	5.00
435	Guscio fond.	444	445	492	491	1	40.0	0.50	5.00
436	Guscio fond.	445	446	493	492	1	40.0	0.50	5.00
437	Guscio fond.	446	447	494	493	1	40.0	0.50	5.00
438	Guscio fond.	447	448	495	494	1	40.0	0.50	5.00
439	Guscio fond.	448	449	496	495	1	40.0	0.50	5.00
440	Guscio fond.	449	450	497	496	1	40.0	0.50	5.00
441	Guscio fond.	450	451	498	497	1	40.0	0.50	5.00
442	Guscio fond.	451	452	499	498	1	40.0	0.50	5.00
443	Guscio fond.	452	453	500	499	1	40.0	0.50	5.00
444	Guscio fond.	453	454	501	500	1	40.0	0.50	5.00
445	Guscio fond.	454	455	502	501	1	40.0	0.50	5.00
446	Guscio fond.	455	456	503	502	1	40.0	0.50	5.00
447	Guscio fond.	456	457	504	503	1	40.0	0.50	5.00
448	Guscio fond.	457	458	505	504	1	40.0	0.50	5.00
449	Guscio fond.	458	459	506	505	1	40.0	0.50	5.00
450	Guscio fond.	459	460	507	506	1	40.0	0.50	5.00
451	Guscio fond.	460	461	508	507	1	40.0	0.50	5.00
452	Guscio fond.	461	462	509	508	1	40.0	0.50	5.00
453	Guscio fond.	462	463	510	509	1	40.0	0.50	5.00
454	Guscio fond.	463	464	511	510	1	40.0	0.50	5.00
455	Guscio fond.	464	465	512	511	1	40.0	0.50	5.00
456	Guscio fond.	465	466	513	512	1	40.0	0.50	5.00
457	Guscio fond.	466	467	514	513	1	40.0	0.50	5.00
458	Guscio fond.	467	468	515	514	1	40.0	0.50	5.00
459	Guscio fond.	468	469	516	515	1	40.0	0.50	5.00
460	Guscio fond.	469	470	517	516	1	40.0	0.50	5.00
461	Guscio fond.	471	472	519	518	1	40.0	0.50	5.00
462	Guscio fond.	472	473	520	519	1	40.0	0.50	5.00
463	Guscio fond.	473	474	521	520	1	40.0	0.50	5.00
464	Guscio fond.	474	475	522	521	1	40.0	0.50	5.00
465	Guscio fond.	475	476	523	522	1	40.0	0.50	5.00
466	Guscio fond.	476	477	524	523	1	40.0	0.50	5.00
467	Guscio fond.	477	478	525	524	1	40.0	0.50	5.00
468	Guscio fond.	478	479	526	525	1	40.0	0.50	5.00
469	Guscio fond.	479	480	527	526	1	40.0	0.50	5.00
470	Guscio fond.	480	481	528	527	1	40.0	0.50	5.00
471	Guscio fond.	481	482	529	528	1	40.0	0.50	5.00
472	Guscio fond.	482	483	530	529	1	40.0	0.50	5.00
473	Guscio fond.	483	484	531	530	1	40.0	0.50	5.00
474	Guscio fond.	484	485	532	531	1	40.0	0.50	5.00
475	Guscio fond.	485	486	533	532	1	40.0	0.50	5.00
476	Guscio fond.	486	487	534	533	1	40.0	0.50	5.00
477	Guscio fond.	487	488	535	534	1	40.0	0.50	5.00
478	Guscio fond.	488	489	536	535	1	40.0	0.50	5.00
479	Guscio fond.	489	490	537	536	1	40.0	0.50	5.00
480	Guscio fond.	490	491	538	537	1	40.0	0.50	5.00
481	Guscio fond.	491	492	539	538	1	40.0	0.50	5.00
482	Guscio fond.	492	493	540	539	1	40.0	0.50	5.00
483	Guscio fond.	493	494	541	540	1	40.0	0.50	5.00
484	Guscio fond.	494	495	542	541	1	40.0	0.50	5.00
485	Guscio fond.	495	496	543	542	1	40.0	0.50	5.00
486	Guscio fond.	496	497	544	543	1	40.0	0.50	5.00
487	Guscio fond.	497	498	545	544	1	40.0	0.50	5.00
488	Guscio fond.	498	499	546	545	1	40.0	0.50	5.00
489	Guscio fond.	499	500	547	546	1	40.0	0.50	5.00
490	Guscio fond.	500	501	548	547	1	40.0	0.50	5.00
491	Guscio fond.	501	502	549	548	1	40.0	0.50	5.00
492	Guscio fond.	502	503	550	549	1	40.0	0.50	5.00
493	Guscio fond.	503	504	551	550	1	40.0	0.50	5.00
494	Guscio fond.	504	505	552	551	1	40.0	0.50	5.00
495	Guscio fond.	505	506	553	552	1	40.0	0.50	5.00
496	Guscio fond.	506	507	554	553	1	40.0	0.50	5.00
497	Guscio fond.	507	508	555	554	1	40.0	0.50	5.00
498	Guscio fond.	508	509	556	555	1	40.0	0.50	5.00
499	Guscio fond.	509	510	557	556	1	40.0	0.50	5.00
500	Guscio fond.	510	511	558	557	1	40.0	0.50	5.00
501	Guscio fond.	511	512	559	558	1	40.0	0.50	5.00
502	Guscio fond.	512	513	560	559	1	40.0	0.50	5.00

503	Guscio fond.	513	514	561	560	1	40.0	0.50	5.00
504	Guscio fond.	514	515	562	561	1	40.0	0.50	5.00
505	Guscio fond.	515	516	563	562	1	40.0	0.50	5.00
506	Guscio fond.	516	517	564	563	1	40.0	0.50	5.00
507	Guscio fond.	518	519	566	565	1	40.0	0.50	5.00
508	Guscio fond.	519	520	567	566	1	40.0	0.50	5.00
509	Guscio fond.	520	521	568	567	1	40.0	0.50	5.00
510	Guscio fond.	521	522	569	568	1	40.0	0.50	5.00
511	Guscio fond.	522	523	570	569	1	40.0	0.50	5.00
512	Guscio fond.	523	524	571	570	1	40.0	0.50	5.00
513	Guscio fond.	524	525	572	571	1	40.0	0.50	5.00
514	Guscio fond.	525	526	573	572	1	40.0	0.50	5.00
515	Guscio fond.	526	527	574	573	1	40.0	0.50	5.00
516	Guscio fond.	527	528	575	574	1	40.0	0.50	5.00
517	Guscio fond.	528	529	576	575	1	40.0	0.50	5.00
518	Guscio fond.	529	530	577	576	1	40.0	0.50	5.00
519	Guscio fond.	530	531	578	577	1	40.0	0.50	5.00
520	Guscio fond.	531	532	579	578	1	40.0	0.50	5.00
521	Guscio fond.	532	533	580	579	1	40.0	0.50	5.00
522	Guscio fond.	533	534	581	580	1	40.0	0.50	5.00
523	Guscio fond.	534	535	582	581	1	40.0	0.50	5.00
524	Guscio fond.	535	536	583	582	1	40.0	0.50	5.00
525	Guscio fond.	536	537	584	583	1	40.0	0.50	5.00
526	Guscio fond.	537	538	585	584	1	40.0	0.50	5.00
527	Guscio fond.	538	539	586	585	1	40.0	0.50	5.00
528	Guscio fond.	539	540	587	586	1	40.0	0.50	5.00
529	Guscio fond.	540	541	588	587	1	40.0	0.50	5.00
530	Guscio fond.	541	542	589	588	1	40.0	0.50	5.00
531	Guscio fond.	542	543	590	589	1	40.0	0.50	5.00
532	Guscio fond.	543	544	591	590	1	40.0	0.50	5.00
533	Guscio fond.	544	545	592	591	1	40.0	0.50	5.00
534	Guscio fond.	545	546	593	592	1	40.0	0.50	5.00
535	Guscio fond.	546	547	594	593	1	40.0	0.50	5.00
536	Guscio fond.	547	548	595	594	1	40.0	0.50	5.00
537	Guscio fond.	548	549	596	595	1	40.0	0.50	5.00
538	Guscio fond.	549	550	597	596	1	40.0	0.50	5.00
539	Guscio fond.	550	551	598	597	1	40.0	0.50	5.00
540	Guscio fond.	551	552	599	598	1	40.0	0.50	5.00
541	Guscio fond.	552	553	600	599	1	40.0	0.50	5.00
542	Guscio fond.	553	554	601	600	1	40.0	0.50	5.00
543	Guscio fond.	554	555	602	601	1	40.0	0.50	5.00
544	Guscio fond.	555	556	603	602	1	40.0	0.50	5.00
545	Guscio fond.	556	557	604	603	1	40.0	0.50	5.00
546	Guscio fond.	557	558	605	604	1	40.0	0.50	5.00
547	Guscio fond.	558	559	606	605	1	40.0	0.50	5.00
548	Guscio fond.	559	560	607	606	1	40.0	0.50	5.00
549	Guscio fond.	560	561	608	607	1	40.0	0.50	5.00
550	Guscio fond.	561	562	609	608	1	40.0	0.50	5.00
551	Guscio fond.	562	563	610	609	1	40.0	0.50	5.00
552	Guscio fond.	563	564	611	610	1	40.0	0.50	5.00
553	Setto	237	284	617	612	1	15.0		
554	Setto	247	294	622	613	1	15.0		
555	Setto	259	306	628	614	1	15.0		
556	Setto	271	318	634	615	1	15.0		
557	Setto	281	328	639	616	1	15.0		
558	Setto	284	331	640	617	1	15.0		
559	Setto	286	333	641	618	1	15.0		
560	Setto	288	335	642	619	1	15.0		
561	Setto	290	337	643	620	1	15.0		
562	Setto	292	339	644	621	1	15.0		
563	Setto	294	341	645	622	1	15.0		
564	Setto	296	343	646	623	1	15.0		
565	Setto	298	345	647	624	1	15.0		
566	Setto	300	347	648	625	1	15.0		
567	Setto	302	349	649	626	1	15.0		
568	Setto	304	351	650	627	1	15.0		
569	Setto	306	353	651	628	1	15.0		
570	Setto	308	355	652	629	1	15.0		
571	Setto	310	357	653	630	1	15.0		
572	Setto	312	359	654	631	1	15.0		
573	Setto	314	361	655	632	1	15.0		
574	Setto	316	363	656	633	1	15.0		
575	Setto	318	365	657	634	1	15.0		
576	Setto	320	367	658	635	1	15.0		
577	Setto	322	369	659	636	1	15.0		
578	Setto	324	371	660	637	1	15.0		
579	Setto	326	373	661	638	1	15.0		
580	Setto	328	375	662	639	1	15.0		

581	Setto	331	378	663	640	1	15.0
582	Setto	333	380	664	641	1	15.0
583	Setto	335	382	665	642	1	15.0
584	Setto	337	384	666	643	1	15.0
585	Setto	339	386	667	644	1	15.0
586	Setto	341	388	668	645	1	15.0
587	Setto	343	390	669	646	1	15.0
588	Setto	345	392	670	647	1	15.0
589	Setto	347	394	671	648	1	15.0
590	Setto	349	396	672	649	1	15.0
591	Setto	351	398	673	650	1	15.0
592	Setto	353	400	674	651	1	15.0
593	Setto	355	402	675	652	1	15.0
594	Setto	357	404	676	653	1	15.0
595	Setto	359	406	677	654	1	15.0
596	Setto	361	408	678	655	1	15.0
597	Setto	363	410	679	656	1	15.0
598	Setto	365	412	680	657	1	15.0
599	Setto	367	414	681	658	1	15.0
600	Setto	369	416	682	659	1	15.0
601	Setto	371	418	683	660	1	15.0
602	Setto	373	420	684	661	1	15.0
603	Setto	375	422	685	662	1	15.0
604	Setto	378	425	686	663	1	15.0
605	Setto	380	427	687	664	1	15.0
606	Setto	382	429	688	665	1	15.0
607	Setto	384	431	689	666	1	15.0
608	Setto	386	433	690	667	1	15.0
609	Setto	388	435	691	668	1	15.0
610	Setto	390	437	692	669	1	15.0
611	Setto	392	439	693	670	1	15.0
612	Setto	394	441	694	671	1	15.0
613	Setto	396	443	695	672	1	15.0
614	Setto	398	445	696	673	1	15.0
615	Setto	400	447	697	674	1	15.0
616	Setto	402	449	698	675	1	15.0
617	Setto	404	451	699	676	1	15.0
618	Setto	406	453	700	677	1	15.0
619	Setto	408	455	701	678	1	15.0
620	Setto	410	457	702	679	1	15.0
621	Setto	412	459	703	680	1	15.0
622	Setto	414	461	704	681	1	15.0
623	Setto	416	463	705	682	1	15.0
624	Setto	418	465	706	683	1	15.0
625	Setto	420	467	707	684	1	15.0
626	Setto	422	469	708	685	1	15.0
627	Setto	425	472	709	686	1	15.0
628	Setto	427	474	710	687	1	15.0
629	Setto	429	476	711	688	1	15.0
630	Setto	431	478	712	689	1	15.0
631	Setto	433	480	713	690	1	15.0
632	Setto	435	482	714	691	1	15.0
633	Setto	437	484	715	692	1	15.0
634	Setto	439	486	716	693	1	15.0
635	Setto	441	488	717	694	1	15.0
636	Setto	443	490	718	695	1	15.0
637	Setto	445	492	719	696	1	15.0
638	Setto	447	494	720	697	1	15.0
639	Setto	449	496	721	698	1	15.0
640	Setto	451	498	722	699	1	15.0
641	Setto	453	500	723	700	1	15.0
642	Setto	455	502	724	701	1	15.0
643	Setto	457	504	725	702	1	15.0
644	Setto	459	506	726	703	1	15.0
645	Setto	461	508	727	704	1	15.0
646	Setto	463	510	728	705	1	15.0
647	Setto	465	512	729	706	1	15.0
648	Setto	467	514	730	707	1	15.0
649	Setto	469	516	731	708	1	15.0
650	Setto	472	519	732	709	1	15.0
651	Setto	474	521	734	710	1	15.0
652	Setto	476	523	736	711	1	15.0
653	Setto	478	525	738	712	1	15.0
654	Setto	480	527	740	713	1	15.0
655	Setto	482	529	742	714	1	15.0
656	Setto	484	531	744	715	1	15.0
657	Setto	486	533	746	716	1	15.0
658	Setto	488	535	748	717	1	15.0

659	Setto	490	537	750	718	1	15.0
660	Setto	492	539	752	719	1	15.0
661	Setto	494	541	754	720	1	15.0
662	Setto	496	543	756	721	1	15.0
663	Setto	498	545	758	722	1	15.0
664	Setto	500	547	760	723	1	15.0
665	Setto	502	549	762	724	1	15.0
666	Setto	504	551	764	725	1	15.0
667	Setto	506	553	766	726	1	15.0
668	Setto	508	555	768	727	1	15.0
669	Setto	510	557	770	728	1	15.0
670	Setto	512	559	772	729	1	15.0
671	Setto	514	561	774	730	1	15.0
672	Setto	516	563	776	731	1	15.0
673	Setto	732	733	520	519	1	15.0
674	Setto	733	734	521	520	1	15.0
675	Setto	734	735	522	521	1	15.0
676	Setto	735	736	523	522	1	15.0
677	Setto	736	737	524	523	1	15.0
678	Setto	737	738	525	524	1	15.0
679	Setto	738	739	526	525	1	15.0
680	Setto	739	740	527	526	1	15.0
681	Setto	740	741	528	527	1	15.0
682	Setto	741	742	529	528	1	15.0
683	Setto	742	743	530	529	1	15.0
684	Setto	743	744	531	530	1	15.0
685	Setto	744	745	532	531	1	15.0
686	Setto	745	746	533	532	1	15.0
687	Setto	746	747	534	533	1	15.0
688	Setto	747	748	535	534	1	15.0
689	Setto	748	749	536	535	1	15.0
690	Setto	749	750	537	536	1	15.0
691	Setto	750	751	538	537	1	15.0
692	Setto	751	752	539	538	1	15.0
693	Setto	752	753	540	539	1	15.0
694	Setto	753	754	541	540	1	15.0
695	Setto	754	755	542	541	1	15.0
696	Setto	755	756	543	542	1	15.0
697	Setto	756	757	544	543	1	15.0
698	Setto	757	758	545	544	1	15.0
699	Setto	758	759	546	545	1	15.0
700	Setto	759	760	547	546	1	15.0
701	Setto	760	761	548	547	1	15.0
702	Setto	761	762	549	548	1	15.0
703	Setto	762	763	550	549	1	15.0
704	Setto	763	764	551	550	1	15.0
705	Setto	764	765	552	551	1	15.0
706	Setto	765	766	553	552	1	15.0
707	Setto	766	767	554	553	1	15.0
708	Setto	767	768	555	554	1	15.0
709	Setto	768	769	556	555	1	15.0
710	Setto	769	770	557	556	1	15.0
711	Setto	770	771	558	557	1	15.0
712	Setto	771	772	559	558	1	15.0
713	Setto	772	773	560	559	1	15.0
714	Setto	773	774	561	560	1	15.0
715	Setto	774	775	562	561	1	15.0
716	Setto	775	776	563	562	1	15.0
717	Setto	612	617	782	777	1	15.0
718	Setto	613	622	787	778	1	15.0
719	Setto	614	628	793	779	1	15.0
720	Setto	615	634	799	780	1	15.0
721	Setto	616	639	804	781	1	15.0
722	Setto	617	640	805	782	1	15.0
723	Setto	618	641	806	783	1	15.0
724	Setto	619	642	807	784	1	15.0
725	Setto	620	643	808	785	1	15.0
726	Setto	621	644	809	786	1	15.0
727	Setto	622	645	810	787	1	15.0
728	Setto	623	646	811	788	1	15.0
729	Setto	624	647	812	789	1	15.0
730	Setto	625	648	813	790	1	15.0
731	Setto	626	649	814	791	1	15.0
732	Setto	627	650	815	792	1	15.0
733	Setto	628	651	816	793	1	15.0
734	Setto	629	652	817	794	1	15.0
735	Setto	630	653	818	795	1	15.0
736	Setto	631	654	819	796	1	15.0

737	Setto	632	655	820	797	1	15.0
738	Setto	633	656	821	798	1	15.0
739	Setto	634	657	822	799	1	15.0
740	Setto	635	658	823	800	1	15.0
741	Setto	636	659	824	801	1	15.0
742	Setto	637	660	825	802	1	15.0
743	Setto	638	661	826	803	1	15.0
744	Setto	639	662	827	804	1	15.0
745	Setto	640	663	828	805	1	15.0
746	Setto	641	664	829	806	1	15.0
747	Setto	642	665	830	807	1	15.0
748	Setto	643	666	831	808	1	15.0
749	Setto	644	667	832	809	1	15.0
750	Setto	645	668	833	810	1	15.0
751	Setto	646	669	834	811	1	15.0
752	Setto	647	670	835	812	1	15.0
753	Setto	648	671	836	813	1	15.0
754	Setto	649	672	837	814	1	15.0
755	Setto	650	673	838	815	1	15.0
756	Setto	651	674	839	816	1	15.0
757	Setto	652	675	840	817	1	15.0
758	Setto	653	676	841	818	1	15.0
759	Setto	654	677	842	819	1	15.0
760	Setto	655	678	843	820	1	15.0
761	Setto	656	679	844	821	1	15.0
762	Setto	657	680	845	822	1	15.0
763	Setto	658	681	846	823	1	15.0
764	Setto	659	682	847	824	1	15.0
765	Setto	660	683	848	825	1	15.0
766	Setto	661	684	849	826	1	15.0
767	Setto	662	685	850	827	1	15.0
768	Setto	663	686	851	828	1	15.0
769	Setto	664	687	852	829	1	15.0
770	Setto	665	688	853	830	1	15.0
771	Setto	666	689	854	831	1	15.0
772	Setto	667	690	855	832	1	15.0
773	Setto	668	691	856	833	1	15.0
774	Setto	669	692	857	834	1	15.0
775	Setto	670	693	858	835	1	15.0
776	Setto	671	694	859	836	1	15.0
777	Setto	672	695	860	837	1	15.0
778	Setto	673	696	861	838	1	15.0
779	Setto	674	697	862	839	1	15.0
780	Setto	675	698	863	840	1	15.0
781	Setto	676	699	864	841	1	15.0
782	Setto	677	700	865	842	1	15.0
783	Setto	678	701	866	843	1	15.0
784	Setto	679	702	867	844	1	15.0
785	Setto	680	703	868	845	1	15.0
786	Setto	681	704	869	846	1	15.0
787	Setto	682	705	870	847	1	15.0
788	Setto	683	706	871	848	1	15.0
789	Setto	684	707	872	849	1	15.0
790	Setto	685	708	873	850	1	15.0
791	Setto	686	709	874	851	1	15.0
792	Setto	687	710	875	852	1	15.0
793	Setto	688	711	876	853	1	15.0
794	Setto	689	712	877	854	1	15.0
795	Setto	690	713	878	855	1	15.0
796	Setto	691	714	879	856	1	15.0
797	Setto	692	715	880	857	1	15.0
798	Setto	693	716	881	858	1	15.0
799	Setto	694	717	882	859	1	15.0
800	Setto	695	718	883	860	1	15.0
801	Setto	696	719	884	861	1	15.0
802	Setto	697	720	885	862	1	15.0
803	Setto	698	721	886	863	1	15.0
804	Setto	699	722	887	864	1	15.0
805	Setto	700	723	888	865	1	15.0
806	Setto	701	724	889	866	1	15.0
807	Setto	702	725	890	867	1	15.0
808	Setto	703	726	891	868	1	15.0
809	Setto	704	727	892	869	1	15.0
810	Setto	705	728	893	870	1	15.0
811	Setto	706	729	894	871	1	15.0
812	Setto	707	730	895	872	1	15.0
813	Setto	708	731	896	873	1	15.0
814	Setto	709	732	897	874	1	15.0

815	Setto	710	734	899	875	1	15.0
816	Setto	711	736	901	876	1	15.0
817	Setto	712	738	903	877	1	15.0
818	Setto	713	740	905	878	1	15.0
819	Setto	714	742	907	879	1	15.0
820	Setto	715	744	909	880	1	15.0
821	Setto	716	746	911	881	1	15.0
822	Setto	717	748	913	882	1	15.0
823	Setto	718	750	915	883	1	15.0
824	Setto	719	752	917	884	1	15.0
825	Setto	720	754	919	885	1	15.0
826	Setto	721	756	921	886	1	15.0
827	Setto	722	758	923	887	1	15.0
828	Setto	723	760	925	888	1	15.0
829	Setto	724	762	927	889	1	15.0
830	Setto	725	764	929	890	1	15.0
831	Setto	726	766	931	891	1	15.0
832	Setto	727	768	933	892	1	15.0
833	Setto	728	770	935	893	1	15.0
834	Setto	729	772	937	894	1	15.0
835	Setto	730	774	939	895	1	15.0
836	Setto	731	776	941	896	1	15.0
837	Setto	897	898	733	732	1	15.0
838	Setto	898	899	734	733	1	15.0
839	Setto	899	900	735	734	1	15.0
840	Setto	900	901	736	735	1	15.0
841	Setto	901	902	737	736	1	15.0
842	Setto	902	903	738	737	1	15.0
843	Setto	903	904	739	738	1	15.0
844	Setto	904	905	740	739	1	15.0
845	Setto	905	906	741	740	1	15.0
846	Setto	906	907	742	741	1	15.0
847	Setto	907	908	743	742	1	15.0
848	Setto	908	909	744	743	1	15.0
849	Setto	909	910	745	744	1	15.0
850	Setto	910	911	746	745	1	15.0
851	Setto	911	912	747	746	1	15.0
852	Setto	912	913	748	747	1	15.0
853	Setto	913	914	749	748	1	15.0
854	Setto	914	915	750	749	1	15.0
855	Setto	915	916	751	750	1	15.0
856	Setto	916	917	752	751	1	15.0
857	Setto	917	918	753	752	1	15.0
858	Setto	918	919	754	753	1	15.0
859	Setto	919	920	755	754	1	15.0
860	Setto	920	921	756	755	1	15.0
861	Setto	921	922	757	756	1	15.0
862	Setto	922	923	758	757	1	15.0
863	Setto	923	924	759	758	1	15.0
864	Setto	924	925	760	759	1	15.0
865	Setto	925	926	761	760	1	15.0
866	Setto	926	927	762	761	1	15.0
867	Setto	927	928	763	762	1	15.0
868	Setto	928	929	764	763	1	15.0
869	Setto	929	930	765	764	1	15.0
870	Setto	930	931	766	765	1	15.0
871	Setto	931	932	767	766	1	15.0
872	Setto	932	933	768	767	1	15.0
873	Setto	933	934	769	768	1	15.0
874	Setto	934	935	770	769	1	15.0
875	Setto	935	936	771	770	1	15.0
876	Setto	936	937	772	771	1	15.0
877	Setto	937	938	773	772	1	15.0
878	Setto	938	939	774	773	1	15.0
879	Setto	939	940	775	774	1	15.0
880	Setto	940	941	776	775	1	15.0
881	Setto	777	782	947	942	1	15.0
882	Setto	778	787	957	943	1	15.0
883	Setto	779	793	969	944	1	15.0
884	Setto	780	799	981	945	1	15.0
885	Setto	781	804	991	946	1	15.0
886	Setto	782	805	992	947	1	15.0
887	Setto	783	806	994	949	1	15.0
888	Setto	784	807	996	951	1	15.0
889	Setto	785	808	998	953	1	15.0
890	Setto	786	809	1000	955	1	15.0
891	Setto	787	810	1002	957	1	15.0
892	Setto	788	811	1004	959	1	15.0

893	Setto	789	812	1006	961	1	15.0
894	Setto	790	813	1008	963	1	15.0
895	Setto	791	814	1010	965	1	15.0
896	Setto	792	815	1012	967	1	15.0
897	Setto	793	816	1014	969	1	15.0
898	Setto	794	817	1016	971	1	15.0
899	Setto	795	818	1018	973	1	15.0
900	Setto	796	819	1020	975	1	15.0
901	Setto	797	820	1022	977	1	15.0
902	Setto	798	821	1024	979	1	15.0
903	Setto	799	822	1026	981	1	15.0
904	Setto	800	823	1028	983	1	15.0
905	Setto	801	824	1030	985	1	15.0
906	Setto	802	825	1032	987	1	15.0
907	Setto	803	826	1034	989	1	15.0
908	Setto	804	827	1036	991	1	15.0
909	Setto	805	828	1037	992	1	15.0
910	Setto	806	829	1039	994	1	15.0
911	Setto	807	830	1041	996	1	15.0
912	Setto	808	831	1043	998	1	15.0
913	Setto	809	832	1045	1000	1	15.0
914	Setto	810	833	1047	1002	1	15.0
915	Setto	811	834	1049	1004	1	15.0
916	Setto	812	835	1051	1006	1	15.0
917	Setto	813	836	1053	1008	1	15.0
918	Setto	814	837	1055	1010	1	15.0
919	Setto	815	838	1057	1012	1	15.0
920	Setto	816	839	1059	1014	1	15.0
921	Setto	817	840	1061	1016	1	15.0
922	Setto	818	841	1063	1018	1	15.0
923	Setto	819	842	1065	1020	1	15.0
924	Setto	820	843	1067	1022	1	15.0
925	Setto	821	844	1069	1024	1	15.0
926	Setto	822	845	1071	1026	1	15.0
927	Setto	823	846	1073	1028	1	15.0
928	Setto	824	847	1075	1030	1	15.0
929	Setto	825	848	1077	1032	1	15.0
930	Setto	826	849	1079	1034	1	15.0
931	Setto	827	850	1081	1036	1	15.0
932	Setto	828	851	1082	1037	1	15.0
933	Setto	829	852	1084	1039	1	15.0
934	Setto	830	853	1086	1041	1	15.0
935	Setto	831	854	1088	1043	1	15.0
936	Setto	832	855	1090	1045	1	15.0
937	Setto	833	856	1092	1047	1	15.0
938	Setto	834	857	1094	1049	1	15.0
939	Setto	835	858	1096	1051	1	15.0
940	Setto	836	859	1098	1053	1	15.0
941	Setto	837	860	1100	1055	1	15.0
942	Setto	838	861	1102	1057	1	15.0
943	Setto	839	862	1104	1059	1	15.0
944	Setto	840	863	1106	1061	1	15.0
945	Setto	841	864	1108	1063	1	15.0
946	Setto	842	865	1110	1065	1	15.0
947	Setto	843	866	1112	1067	1	15.0
948	Setto	844	867	1114	1069	1	15.0
949	Setto	845	868	1116	1071	1	15.0
950	Setto	846	869	1118	1073	1	15.0
951	Setto	847	870	1120	1075	1	15.0
952	Setto	848	871	1122	1077	1	15.0
953	Setto	849	872	1124	1079	1	15.0
954	Setto	850	873	1126	1081	1	15.0
955	Setto	851	874	1127	1082	1	15.0
956	Setto	852	875	1129	1084	1	15.0
957	Setto	853	876	1131	1086	1	15.0
958	Setto	854	877	1133	1088	1	15.0
959	Setto	855	878	1135	1090	1	15.0
960	Setto	856	879	1137	1092	1	15.0
961	Setto	857	880	1139	1094	1	15.0
962	Setto	858	881	1141	1096	1	15.0
963	Setto	859	882	1143	1098	1	15.0
964	Setto	860	883	1145	1100	1	15.0
965	Setto	861	884	1147	1102	1	15.0
966	Setto	862	885	1149	1104	1	15.0
967	Setto	863	886	1151	1106	1	15.0
968	Setto	864	887	1153	1108	1	15.0
969	Setto	865	888	1155	1110	1	15.0
970	Setto	866	889	1157	1112	1	15.0

971	Setto	867	890	1159	1114	1	15.0
972	Setto	868	891	1161	1116	1	15.0
973	Setto	869	892	1163	1118	1	15.0
974	Setto	870	893	1165	1120	1	15.0
975	Setto	871	894	1167	1122	1	15.0
976	Setto	872	895	1169	1124	1	15.0
977	Setto	873	896	1171	1126	1	15.0
978	Setto	874	897	1172	1127	1	15.0
979	Setto	875	899	1174	1129	1	15.0
980	Setto	876	901	1176	1131	1	15.0
981	Setto	877	903	1178	1133	1	15.0
982	Setto	878	905	1180	1135	1	15.0
983	Setto	879	907	1182	1137	1	15.0
984	Setto	880	909	1184	1139	1	15.0
985	Setto	881	911	1186	1141	1	15.0
986	Setto	882	913	1188	1143	1	15.0
987	Setto	883	915	1190	1145	1	15.0
988	Setto	884	917	1192	1147	1	15.0
989	Setto	885	919	1194	1149	1	15.0
990	Setto	886	921	1196	1151	1	15.0
991	Setto	887	923	1198	1153	1	15.0
992	Setto	888	925	1200	1155	1	15.0
993	Setto	889	927	1202	1157	1	15.0
994	Setto	890	929	1204	1159	1	15.0
995	Setto	891	931	1206	1161	1	15.0
996	Setto	892	933	1208	1163	1	15.0
997	Setto	893	935	1210	1165	1	15.0
998	Setto	894	937	1212	1167	1	15.0
999	Setto	895	939	1214	1169	1	15.0
1000	Setto	896	941	1216	1171	1	15.0
1001	Setto	1172	1173	898	897	1	15.0
1002	Setto	1173	1174	899	898	1	15.0
1003	Setto	1174	1175	900	899	1	15.0
1004	Setto	1175	1176	901	900	1	15.0
1005	Setto	1176	1177	902	901	1	15.0
1006	Setto	1177	1178	903	902	1	15.0
1007	Setto	1178	1179	904	903	1	15.0
1008	Setto	1179	1180	905	904	1	15.0
1009	Setto	1180	1181	906	905	1	15.0
1010	Setto	1181	1182	907	906	1	15.0
1011	Setto	1182	1183	908	907	1	15.0
1012	Setto	1183	1184	909	908	1	15.0
1013	Setto	1184	1185	910	909	1	15.0
1014	Setto	1185	1186	911	910	1	15.0
1015	Setto	1186	1187	912	911	1	15.0
1016	Setto	1187	1188	913	912	1	15.0
1017	Setto	1188	1189	914	913	1	15.0
1018	Setto	1189	1190	915	914	1	15.0
1019	Setto	1190	1191	916	915	1	15.0
1020	Setto	1191	1192	917	916	1	15.0
1021	Setto	1192	1193	918	917	1	15.0
1022	Setto	1193	1194	919	918	1	15.0
1023	Setto	1194	1195	920	919	1	15.0
1024	Setto	1195	1196	921	920	1	15.0
1025	Setto	1196	1197	922	921	1	15.0
1026	Setto	1197	1198	923	922	1	15.0
1027	Setto	1198	1199	924	923	1	15.0
1028	Setto	1199	1200	925	924	1	15.0
1029	Setto	1200	1201	926	925	1	15.0
1030	Setto	1201	1202	927	926	1	15.0
1031	Setto	1202	1203	928	927	1	15.0
1032	Setto	1203	1204	929	928	1	15.0
1033	Setto	1204	1205	930	929	1	15.0
1034	Setto	1205	1206	931	930	1	15.0
1035	Setto	1206	1207	932	931	1	15.0
1036	Setto	1207	1208	933	932	1	15.0
1037	Setto	1208	1209	934	933	1	15.0
1038	Setto	1209	1210	935	934	1	15.0
1039	Setto	1210	1211	936	935	1	15.0
1040	Setto	1211	1212	937	936	1	15.0
1041	Setto	1212	1213	938	937	1	15.0
1042	Setto	1213	1214	939	938	1	15.0
1043	Setto	1214	1215	940	939	1	15.0
1044	Setto	1215	1216	941	940	1	15.0
1045	Guscio	947	948	993	992	1	15.0
1046	Guscio	948	949	994	993	1	15.0
1047	Guscio	949	950	995	994	1	15.0
1048	Guscio	950	951	996	995	1	15.0

1049	Guscio	951	952	997	996	1	15.0
1050	Guscio	952	953	998	997	1	15.0
1051	Guscio	953	954	999	998	1	15.0
1052	Guscio	954	955	1000	999	1	15.0
1053	Guscio	955	956	1001	1000	1	15.0
1054	Guscio	956	957	1002	1001	1	15.0
1055	Guscio	957	958	1003	1002	1	15.0
1056	Guscio	958	959	1004	1003	1	15.0
1057	Guscio	959	960	1005	1004	1	15.0
1058	Guscio	960	961	1006	1005	1	15.0
1059	Guscio	961	962	1007	1006	1	15.0
1060	Guscio	962	963	1008	1007	1	15.0
1061	Guscio	963	964	1009	1008	1	15.0
1062	Guscio	964	965	1010	1009	1	15.0
1063	Guscio	965	966	1011	1010	1	15.0
1064	Guscio	966	967	1012	1011	1	15.0
1065	Guscio	967	968	1013	1012	1	15.0
1066	Guscio	968	969	1014	1013	1	15.0
1067	Guscio	969	970	1015	1014	1	15.0
1068	Guscio	970	971	1016	1015	1	15.0
1069	Guscio	971	972	1017	1016	1	15.0
1070	Guscio	972	973	1018	1017	1	15.0
1071	Guscio	973	974	1019	1018	1	15.0
1072	Guscio	974	975	1020	1019	1	15.0
1073	Guscio	975	976	1021	1020	1	15.0
1074	Guscio	976	977	1022	1021	1	15.0
1075	Guscio	977	978	1023	1022	1	15.0
1076	Guscio	978	979	1024	1023	1	15.0
1077	Guscio	979	980	1025	1024	1	15.0
1078	Guscio	980	981	1026	1025	1	15.0
1079	Guscio	981	982	1027	1026	1	15.0
1080	Guscio	982	983	1028	1027	1	15.0
1081	Guscio	983	984	1029	1028	1	15.0
1082	Guscio	984	985	1030	1029	1	15.0
1083	Guscio	985	986	1031	1030	1	15.0
1084	Guscio	986	987	1032	1031	1	15.0
1085	Guscio	987	988	1033	1032	1	15.0
1086	Guscio	988	989	1034	1033	1	15.0
1087	Guscio	989	990	1035	1034	1	15.0
1088	Guscio	990	991	1036	1035	1	15.0
1089	Guscio	992	993	1038	1037	1	15.0
1090	Guscio	993	994	1039	1038	1	15.0
1091	Guscio	994	995	1040	1039	1	15.0
1092	Guscio	995	996	1041	1040	1	15.0
1093	Guscio	996	997	1042	1041	1	15.0
1094	Guscio	997	998	1043	1042	1	15.0
1095	Guscio	998	999	1044	1043	1	15.0
1096	Guscio	999	1000	1045	1044	1	15.0
1097	Guscio	1000	1001	1046	1045	1	15.0
1098	Guscio	1001	1002	1047	1046	1	15.0
1099	Guscio	1002	1003	1048	1047	1	15.0
1100	Guscio	1003	1004	1049	1048	1	15.0
1101	Guscio	1004	1005	1050	1049	1	15.0
1102	Guscio	1005	1006	1051	1050	1	15.0
1103	Guscio	1006	1007	1052	1051	1	15.0
1104	Guscio	1007	1008	1053	1052	1	15.0
1105	Guscio	1008	1009	1054	1053	1	15.0
1106	Guscio	1009	1010	1055	1054	1	15.0
1107	Guscio	1010	1011	1056	1055	1	15.0
1108	Guscio	1011	1012	1057	1056	1	15.0
1109	Guscio	1012	1013	1058	1057	1	15.0
1110	Guscio	1013	1014	1059	1058	1	15.0
1111	Guscio	1014	1015	1060	1059	1	15.0
1112	Guscio	1015	1016	1061	1060	1	15.0
1113	Guscio	1016	1017	1062	1061	1	15.0
1114	Guscio	1017	1018	1063	1062	1	15.0
1115	Guscio	1018	1019	1064	1063	1	15.0
1116	Guscio	1019	1020	1065	1064	1	15.0
1117	Guscio	1020	1021	1066	1065	1	15.0
1118	Guscio	1021	1022	1067	1066	1	15.0
1119	Guscio	1022	1023	1068	1067	1	15.0
1120	Guscio	1023	1024	1069	1068	1	15.0
1121	Guscio	1024	1025	1070	1069	1	15.0
1122	Guscio	1025	1026	1071	1070	1	15.0
1123	Guscio	1026	1027	1072	1071	1	15.0
1124	Guscio	1027	1028	1073	1072	1	15.0
1125	Guscio	1028	1029	1074	1073	1	15.0
1126	Guscio	1029	1030	1075	1074	1	15.0

1127	Guscio	1030	1031	1076	1075	1	15.0
1128	Guscio	1031	1032	1077	1076	1	15.0
1129	Guscio	1032	1033	1078	1077	1	15.0
1130	Guscio	1033	1034	1079	1078	1	15.0
1131	Guscio	1034	1035	1080	1079	1	15.0
1132	Guscio	1035	1036	1081	1080	1	15.0
1133	Guscio	1037	1038	1083	1082	1	15.0
1134	Guscio	1038	1039	1084	1083	1	15.0
1135	Guscio	1039	1040	1085	1084	1	15.0
1136	Guscio	1040	1041	1086	1085	1	15.0
1137	Guscio	1041	1042	1087	1086	1	15.0
1138	Guscio	1042	1043	1088	1087	1	15.0
1139	Guscio	1043	1044	1089	1088	1	15.0
1140	Guscio	1044	1045	1090	1089	1	15.0
1141	Guscio	1045	1046	1091	1090	1	15.0
1142	Guscio	1046	1047	1092	1091	1	15.0
1143	Guscio	1047	1048	1093	1092	1	15.0
1144	Guscio	1048	1049	1094	1093	1	15.0
1145	Guscio	1049	1050	1095	1094	1	15.0
1146	Guscio	1050	1051	1096	1095	1	15.0
1147	Guscio	1051	1052	1097	1096	1	15.0
1148	Guscio	1052	1053	1098	1097	1	15.0
1149	Guscio	1053	1054	1099	1098	1	15.0
1150	Guscio	1054	1055	1100	1099	1	15.0
1151	Guscio	1055	1056	1101	1100	1	15.0
1152	Guscio	1056	1057	1102	1101	1	15.0
1153	Guscio	1057	1058	1103	1102	1	15.0
1154	Guscio	1058	1059	1104	1103	1	15.0
1155	Guscio	1059	1060	1105	1104	1	15.0
1156	Guscio	1060	1061	1106	1105	1	15.0
1157	Guscio	1061	1062	1107	1106	1	15.0
1158	Guscio	1062	1063	1108	1107	1	15.0
1159	Guscio	1063	1064	1109	1108	1	15.0
1160	Guscio	1064	1065	1110	1109	1	15.0
1161	Guscio	1065	1066	1111	1110	1	15.0
1162	Guscio	1066	1067	1112	1111	1	15.0
1163	Guscio	1067	1068	1113	1112	1	15.0
1164	Guscio	1068	1069	1114	1113	1	15.0
1165	Guscio	1069	1070	1115	1114	1	15.0
1166	Guscio	1070	1071	1116	1115	1	15.0
1167	Guscio	1071	1072	1117	1116	1	15.0
1168	Guscio	1072	1073	1118	1117	1	15.0
1169	Guscio	1073	1074	1119	1118	1	15.0
1170	Guscio	1074	1075	1120	1119	1	15.0
1171	Guscio	1075	1076	1121	1120	1	15.0
1172	Guscio	1076	1077	1122	1121	1	15.0
1173	Guscio	1077	1078	1123	1122	1	15.0
1174	Guscio	1078	1079	1124	1123	1	15.0
1175	Guscio	1079	1080	1125	1124	1	15.0
1176	Guscio	1080	1081	1126	1125	1	15.0
1177	Guscio	1082	1083	1128	1127	1	15.0
1178	Guscio	1083	1084	1129	1128	1	15.0
1179	Guscio	1084	1085	1130	1129	1	15.0
1180	Guscio	1085	1086	1131	1130	1	15.0
1181	Guscio	1086	1087	1132	1131	1	15.0
1182	Guscio	1087	1088	1133	1132	1	15.0
1183	Guscio	1088	1089	1134	1133	1	15.0
1184	Guscio	1089	1090	1135	1134	1	15.0
1185	Guscio	1090	1091	1136	1135	1	15.0
1186	Guscio	1091	1092	1137	1136	1	15.0
1187	Guscio	1092	1093	1138	1137	1	15.0
1188	Guscio	1093	1094	1139	1138	1	15.0
1189	Guscio	1094	1095	1140	1139	1	15.0
1190	Guscio	1095	1096	1141	1140	1	15.0
1191	Guscio	1096	1097	1142	1141	1	15.0
1192	Guscio	1097	1098	1143	1142	1	15.0
1193	Guscio	1098	1099	1144	1143	1	15.0
1194	Guscio	1099	1100	1145	1144	1	15.0
1195	Guscio	1100	1101	1146	1145	1	15.0
1196	Guscio	1101	1102	1147	1146	1	15.0
1197	Guscio	1102	1103	1148	1147	1	15.0
1198	Guscio	1103	1104	1149	1148	1	15.0
1199	Guscio	1104	1105	1150	1149	1	15.0
1200	Guscio	1105	1106	1151	1150	1	15.0
1201	Guscio	1106	1107	1152	1151	1	15.0
1202	Guscio	1107	1108	1153	1152	1	15.0
1203	Guscio	1108	1109	1154	1153	1	15.0
1204	Guscio	1109	1110	1155	1154	1	15.0

1205	Guscio	1110	1111	1156	1155	1	15.0
1206	Guscio	1111	1112	1157	1156	1	15.0
1207	Guscio	1112	1113	1158	1157	1	15.0
1208	Guscio	1113	1114	1159	1158	1	15.0
1209	Guscio	1114	1115	1160	1159	1	15.0
1210	Guscio	1115	1116	1161	1160	1	15.0
1211	Guscio	1116	1117	1162	1161	1	15.0
1212	Guscio	1117	1118	1163	1162	1	15.0
1213	Guscio	1118	1119	1164	1163	1	15.0
1214	Guscio	1119	1120	1165	1164	1	15.0
1215	Guscio	1120	1121	1166	1165	1	15.0
1216	Guscio	1121	1122	1167	1166	1	15.0
1217	Guscio	1122	1123	1168	1167	1	15.0
1218	Guscio	1123	1124	1169	1168	1	15.0
1219	Guscio	1124	1125	1170	1169	1	15.0
1220	Guscio	1125	1126	1171	1170	1	15.0
1221	Guscio	1127	1128	1173	1172	1	15.0
1222	Guscio	1128	1129	1174	1173	1	15.0
1223	Guscio	1129	1130	1175	1174	1	15.0
1224	Guscio	1130	1131	1176	1175	1	15.0
1225	Guscio	1131	1132	1177	1176	1	15.0
1226	Guscio	1132	1133	1178	1177	1	15.0
1227	Guscio	1133	1134	1179	1178	1	15.0
1228	Guscio	1134	1135	1180	1179	1	15.0
1229	Guscio	1135	1136	1181	1180	1	15.0
1230	Guscio	1136	1137	1182	1181	1	15.0
1231	Guscio	1137	1138	1183	1182	1	15.0
1232	Guscio	1138	1139	1184	1183	1	15.0
1233	Guscio	1139	1140	1185	1184	1	15.0
1234	Guscio	1140	1141	1186	1185	1	15.0
1235	Guscio	1141	1142	1187	1186	1	15.0
1236	Guscio	1142	1143	1188	1187	1	15.0
1237	Guscio	1143	1144	1189	1188	1	15.0
1238	Guscio	1144	1145	1190	1189	1	15.0
1239	Guscio	1145	1146	1191	1190	1	15.0
1240	Guscio	1146	1147	1192	1191	1	15.0
1241	Guscio	1147	1148	1193	1192	1	15.0
1242	Guscio	1148	1149	1194	1193	1	15.0
1243	Guscio	1149	1150	1195	1194	1	15.0
1244	Guscio	1150	1151	1196	1195	1	15.0
1245	Guscio	1151	1152	1197	1196	1	15.0
1246	Guscio	1152	1153	1198	1197	1	15.0
1247	Guscio	1153	1154	1199	1198	1	15.0
1248	Guscio	1154	1155	1200	1199	1	15.0
1249	Guscio	1155	1156	1201	1200	1	15.0
1250	Guscio	1156	1157	1202	1201	1	15.0
1251	Guscio	1157	1158	1203	1202	1	15.0
1252	Guscio	1158	1159	1204	1203	1	15.0
1253	Guscio	1159	1160	1205	1204	1	15.0
1254	Guscio	1160	1161	1206	1205	1	15.0
1255	Guscio	1161	1162	1207	1206	1	15.0
1256	Guscio	1162	1163	1208	1207	1	15.0
1257	Guscio	1163	1164	1209	1208	1	15.0
1258	Guscio	1164	1165	1210	1209	1	15.0
1259	Guscio	1165	1166	1211	1210	1	15.0
1260	Guscio	1166	1167	1212	1211	1	15.0
1261	Guscio	1167	1168	1213	1212	1	15.0
1262	Guscio	1168	1169	1214	1213	1	15.0
1263	Guscio	1169	1170	1215	1214	1	15.0
1264	Guscio	1170	1171	1216	1215	1	15.0
1265	Setto	942	947	1222	1217	1	15.0
1266	Setto	943	957	1227	1218	1	15.0
1267	Setto	944	969	1233	1219	1	15.0
1268	Setto	945	981	1239	1220	1	15.0
1269	Setto	946	991	1244	1221	1	15.0
1270	Setto	947	992	1245	1222	1	15.0
1271	Setto	949	994	1246	1223	1	15.0
1272	Setto	951	996	1247	1224	1	15.0
1273	Setto	953	998	1248	1225	1	15.0
1274	Setto	955	1000	1249	1226	1	15.0
1275	Setto	957	1002	1250	1227	1	15.0
1276	Setto	959	1004	1251	1228	1	15.0
1277	Setto	961	1006	1252	1229	1	15.0
1278	Setto	963	1008	1253	1230	1	15.0
1279	Setto	965	1010	1254	1231	1	15.0
1280	Setto	967	1012	1255	1232	1	15.0
1281	Setto	969	1014	1256	1233	1	15.0
1282	Setto	971	1016	1257	1234	1	15.0

1283	Setto	973	1018	1258	1235	1	15.0
1284	Setto	975	1020	1259	1236	1	15.0
1285	Setto	977	1022	1260	1237	1	15.0
1286	Setto	979	1024	1261	1238	1	15.0
1287	Setto	981	1026	1262	1239	1	15.0
1288	Setto	983	1028	1263	1240	1	15.0
1289	Setto	985	1030	1264	1241	1	15.0
1290	Setto	987	1032	1265	1242	1	15.0
1291	Setto	989	1034	1266	1243	1	15.0
1292	Setto	991	1036	1267	1244	1	15.0
1293	Setto	992	1037	1268	1245	1	15.0
1294	Setto	994	1039	1269	1246	1	15.0
1295	Setto	996	1041	1270	1247	1	15.0
1296	Setto	998	1043	1271	1248	1	15.0
1297	Setto	1000	1045	1272	1249	1	15.0
1298	Setto	1002	1047	1273	1250	1	15.0
1299	Setto	1004	1049	1274	1251	1	15.0
1300	Setto	1006	1051	1275	1252	1	15.0
1301	Setto	1008	1053	1276	1253	1	15.0
1302	Setto	1010	1055	1277	1254	1	15.0
1303	Setto	1012	1057	1278	1255	1	15.0
1304	Setto	1014	1059	1279	1256	1	15.0
1305	Setto	1016	1061	1280	1257	1	15.0
1306	Setto	1018	1063	1281	1258	1	15.0
1307	Setto	1020	1065	1282	1259	1	15.0
1308	Setto	1022	1067	1283	1260	1	15.0
1309	Setto	1024	1069	1284	1261	1	15.0
1310	Setto	1026	1071	1285	1262	1	15.0
1311	Setto	1028	1073	1286	1263	1	15.0
1312	Setto	1030	1075	1287	1264	1	15.0
1313	Setto	1032	1077	1288	1265	1	15.0
1314	Setto	1034	1079	1289	1266	1	15.0
1315	Setto	1036	1081	1290	1267	1	15.0
1316	Setto	1037	1082	1291	1268	1	15.0
1317	Setto	1039	1084	1292	1269	1	15.0
1318	Setto	1041	1086	1293	1270	1	15.0
1319	Setto	1043	1088	1294	1271	1	15.0
1320	Setto	1045	1090	1295	1272	1	15.0
1321	Setto	1047	1092	1296	1273	1	15.0
1322	Setto	1049	1094	1297	1274	1	15.0
1323	Setto	1051	1096	1298	1275	1	15.0
1324	Setto	1053	1098	1299	1276	1	15.0
1325	Setto	1055	1100	1300	1277	1	15.0
1326	Setto	1057	1102	1301	1278	1	15.0
1327	Setto	1059	1104	1302	1279	1	15.0
1328	Setto	1061	1106	1303	1280	1	15.0
1329	Setto	1063	1108	1304	1281	1	15.0
1330	Setto	1065	1110	1305	1282	1	15.0
1331	Setto	1067	1112	1306	1283	1	15.0
1332	Setto	1069	1114	1307	1284	1	15.0
1333	Setto	1071	1116	1308	1285	1	15.0
1334	Setto	1073	1118	1309	1286	1	15.0
1335	Setto	1075	1120	1310	1287	1	15.0
1336	Setto	1077	1122	1311	1288	1	15.0
1337	Setto	1079	1124	1312	1289	1	15.0
1338	Setto	1081	1126	1313	1290	1	15.0
1339	Setto	1082	1127	1314	1291	1	15.0
1340	Setto	1084	1129	1315	1292	1	15.0
1341	Setto	1086	1131	1316	1293	1	15.0
1342	Setto	1088	1133	1317	1294	1	15.0
1343	Setto	1090	1135	1318	1295	1	15.0
1344	Setto	1092	1137	1319	1296	1	15.0
1345	Setto	1094	1139	1320	1297	1	15.0
1346	Setto	1096	1141	1321	1298	1	15.0
1347	Setto	1098	1143	1322	1299	1	15.0
1348	Setto	1100	1145	1323	1300	1	15.0
1349	Setto	1102	1147	1324	1301	1	15.0
1350	Setto	1104	1149	1325	1302	1	15.0
1351	Setto	1106	1151	1326	1303	1	15.0
1352	Setto	1108	1153	1327	1304	1	15.0
1353	Setto	1110	1155	1328	1305	1	15.0
1354	Setto	1112	1157	1329	1306	1	15.0
1355	Setto	1114	1159	1330	1307	1	15.0
1356	Setto	1116	1161	1331	1308	1	15.0
1357	Setto	1118	1163	1332	1309	1	15.0
1358	Setto	1120	1165	1333	1310	1	15.0
1359	Setto	1122	1167	1334	1311	1	15.0
1360	Setto	1124	1169	1335	1312	1	15.0

1361	Setto	1126	1171	1336	1313	1	15.0
1362	Setto	1127	1172	1337	1314	1	15.0
1363	Setto	1129	1174	1339	1315	1	15.0
1364	Setto	1131	1176	1341	1316	1	15.0
1365	Setto	1133	1178	1343	1317	1	15.0
1366	Setto	1135	1180	1345	1318	1	15.0
1367	Setto	1137	1182	1347	1319	1	15.0
1368	Setto	1139	1184	1349	1320	1	15.0
1369	Setto	1141	1186	1351	1321	1	15.0
1370	Setto	1143	1188	1353	1322	1	15.0
1371	Setto	1145	1190	1355	1323	1	15.0
1372	Setto	1147	1192	1357	1324	1	15.0
1373	Setto	1149	1194	1359	1325	1	15.0
1374	Setto	1151	1196	1361	1326	1	15.0
1375	Setto	1153	1198	1363	1327	1	15.0
1376	Setto	1155	1200	1365	1328	1	15.0
1377	Setto	1157	1202	1367	1329	1	15.0
1378	Setto	1159	1204	1369	1330	1	15.0
1379	Setto	1161	1206	1371	1331	1	15.0
1380	Setto	1163	1208	1373	1332	1	15.0
1381	Setto	1165	1210	1375	1333	1	15.0
1382	Setto	1167	1212	1377	1334	1	15.0
1383	Setto	1169	1214	1379	1335	1	15.0
1384	Setto	1171	1216	1381	1336	1	15.0
1385	Setto	1337	1338	1173	1172	1	15.0
1386	Setto	1338	1339	1174	1173	1	15.0
1387	Setto	1339	1340	1175	1174	1	15.0
1388	Setto	1340	1341	1176	1175	1	15.0
1389	Setto	1341	1342	1177	1176	1	15.0
1390	Setto	1342	1343	1178	1177	1	15.0
1391	Setto	1343	1344	1179	1178	1	15.0
1392	Setto	1344	1345	1180	1179	1	15.0
1393	Setto	1345	1346	1181	1180	1	15.0
1394	Setto	1346	1347	1182	1181	1	15.0
1395	Setto	1347	1348	1183	1182	1	15.0
1396	Setto	1348	1349	1184	1183	1	15.0
1397	Setto	1349	1350	1185	1184	1	15.0
1398	Setto	1350	1351	1186	1185	1	15.0
1399	Setto	1351	1352	1187	1186	1	15.0
1400	Setto	1352	1353	1188	1187	1	15.0
1401	Setto	1353	1354	1189	1188	1	15.0
1402	Setto	1354	1355	1190	1189	1	15.0
1403	Setto	1355	1356	1191	1190	1	15.0
1404	Setto	1356	1357	1192	1191	1	15.0
1405	Setto	1357	1358	1193	1192	1	15.0
1406	Setto	1358	1359	1194	1193	1	15.0
1407	Setto	1359	1360	1195	1194	1	15.0
1408	Setto	1360	1361	1196	1195	1	15.0
1409	Setto	1361	1362	1197	1196	1	15.0
1410	Setto	1362	1363	1198	1197	1	15.0
1411	Setto	1363	1364	1199	1198	1	15.0
1412	Setto	1364	1365	1200	1199	1	15.0
1413	Setto	1365	1366	1201	1200	1	15.0
1414	Setto	1366	1367	1202	1201	1	15.0
1415	Setto	1367	1368	1203	1202	1	15.0
1416	Setto	1368	1369	1204	1203	1	15.0
1417	Setto	1369	1370	1205	1204	1	15.0
1418	Setto	1370	1371	1206	1205	1	15.0
1419	Setto	1371	1372	1207	1206	1	15.0
1420	Setto	1372	1373	1208	1207	1	15.0
1421	Setto	1373	1374	1209	1208	1	15.0
1422	Setto	1374	1375	1210	1209	1	15.0
1423	Setto	1375	1376	1211	1210	1	15.0
1424	Setto	1376	1377	1212	1211	1	15.0
1425	Setto	1377	1378	1213	1212	1	15.0
1426	Setto	1378	1379	1214	1213	1	15.0
1427	Setto	1379	1380	1215	1214	1	15.0
1428	Setto	1380	1381	1216	1215	1	15.0
1429	Setto	1217	1222	1387	1382	1	15.0
1430	Setto	1218	1227	1392	1383	1	15.0
1431	Setto	1219	1233	1398	1384	1	15.0
1432	Setto	1220	1239	1404	1385	1	15.0
1433	Setto	1221	1244	1409	1386	1	15.0
1434	Setto	1222	1245	1410	1387	1	15.0
1435	Setto	1223	1246	1411	1388	1	15.0
1436	Setto	1224	1247	1412	1389	1	15.0
1437	Setto	1225	1248	1413	1390	1	15.0
1438	Setto	1226	1249	1414	1391	1	15.0

1439	Setto	1227	1250	1415	1392	1	15.0
1440	Setto	1228	1251	1416	1393	1	15.0
1441	Setto	1229	1252	1417	1394	1	15.0
1442	Setto	1230	1253	1418	1395	1	15.0
1443	Setto	1231	1254	1419	1396	1	15.0
1444	Setto	1232	1255	1420	1397	1	15.0
1445	Setto	1233	1256	1421	1398	1	15.0
1446	Setto	1234	1257	1422	1399	1	15.0
1447	Setto	1235	1258	1423	1400	1	15.0
1448	Setto	1236	1259	1424	1401	1	15.0
1449	Setto	1237	1260	1425	1402	1	15.0
1450	Setto	1238	1261	1426	1403	1	15.0
1451	Setto	1239	1262	1427	1404	1	15.0
1452	Setto	1240	1263	1428	1405	1	15.0
1453	Setto	1241	1264	1429	1406	1	15.0
1454	Setto	1242	1265	1430	1407	1	15.0
1455	Setto	1243	1266	1431	1408	1	15.0
1456	Setto	1244	1267	1432	1409	1	15.0
1457	Setto	1245	1268	1433	1410	1	15.0
1458	Setto	1246	1269	1434	1411	1	15.0
1459	Setto	1247	1270	1435	1412	1	15.0
1460	Setto	1248	1271	1436	1413	1	15.0
1461	Setto	1249	1272	1437	1414	1	15.0
1462	Setto	1250	1273	1438	1415	1	15.0
1463	Setto	1251	1274	1439	1416	1	15.0
1464	Setto	1252	1275	1440	1417	1	15.0
1465	Setto	1253	1276	1441	1418	1	15.0
1466	Setto	1254	1277	1442	1419	1	15.0
1467	Setto	1255	1278	1443	1420	1	15.0
1468	Setto	1256	1279	1444	1421	1	15.0
1469	Setto	1257	1280	1445	1422	1	15.0
1470	Setto	1258	1281	1446	1423	1	15.0
1471	Setto	1259	1282	1447	1424	1	15.0
1472	Setto	1260	1283	1448	1425	1	15.0
1473	Setto	1261	1284	1449	1426	1	15.0
1474	Setto	1262	1285	1450	1427	1	15.0
1475	Setto	1263	1286	1451	1428	1	15.0
1476	Setto	1264	1287	1452	1429	1	15.0
1477	Setto	1265	1288	1453	1430	1	15.0
1478	Setto	1266	1289	1454	1431	1	15.0
1479	Setto	1267	1290	1455	1432	1	15.0
1480	Setto	1268	1291	1456	1433	1	15.0
1481	Setto	1269	1292	1457	1434	1	15.0
1482	Setto	1270	1293	1458	1435	1	15.0
1483	Setto	1271	1294	1459	1436	1	15.0
1484	Setto	1272	1295	1460	1437	1	15.0
1485	Setto	1273	1296	1461	1438	1	15.0
1486	Setto	1274	1297	1462	1439	1	15.0
1487	Setto	1275	1298	1463	1440	1	15.0
1488	Setto	1276	1299	1464	1441	1	15.0
1489	Setto	1277	1300	1465	1442	1	15.0
1490	Setto	1278	1301	1466	1443	1	15.0
1491	Setto	1279	1302	1467	1444	1	15.0
1492	Setto	1280	1303	1468	1445	1	15.0
1493	Setto	1281	1304	1469	1446	1	15.0
1494	Setto	1282	1305	1470	1447	1	15.0
1495	Setto	1283	1306	1471	1448	1	15.0
1496	Setto	1284	1307	1472	1449	1	15.0
1497	Setto	1285	1308	1473	1450	1	15.0
1498	Setto	1286	1309	1474	1451	1	15.0
1499	Setto	1287	1310	1475	1452	1	15.0
1500	Setto	1288	1311	1476	1453	1	15.0
1501	Setto	1289	1312	1477	1454	1	15.0
1502	Setto	1290	1313	1478	1455	1	15.0
1503	Setto	1291	1314	1479	1456	1	15.0
1504	Setto	1292	1315	1480	1457	1	15.0
1505	Setto	1293	1316	1481	1458	1	15.0
1506	Setto	1294	1317	1482	1459	1	15.0
1507	Setto	1295	1318	1483	1460	1	15.0
1508	Setto	1296	1319	1484	1461	1	15.0
1509	Setto	1297	1320	1485	1462	1	15.0
1510	Setto	1298	1321	1486	1463	1	15.0
1511	Setto	1299	1322	1487	1464	1	15.0
1512	Setto	1300	1323	1488	1465	1	15.0
1513	Setto	1301	1324	1489	1466	1	15.0
1514	Setto	1302	1325	1490	1467	1	15.0
1515	Setto	1303	1326	1491	1468	1	15.0
1516	Setto	1304	1327	1492	1469	1	15.0

1517	Setto	1305	1328	1493	1470	1	15.0
1518	Setto	1306	1329	1494	1471	1	15.0
1519	Setto	1307	1330	1495	1472	1	15.0
1520	Setto	1308	1331	1496	1473	1	15.0
1521	Setto	1309	1332	1497	1474	1	15.0
1522	Setto	1310	1333	1498	1475	1	15.0
1523	Setto	1311	1334	1499	1476	1	15.0
1524	Setto	1312	1335	1500	1477	1	15.0
1525	Setto	1313	1336	1501	1478	1	15.0
1526	Setto	1314	1337	1502	1479	1	15.0
1527	Setto	1315	1339	1504	1480	1	15.0
1528	Setto	1316	1341	1506	1481	1	15.0
1529	Setto	1317	1343	1508	1482	1	15.0
1530	Setto	1318	1345	1510	1483	1	15.0
1531	Setto	1319	1347	1512	1484	1	15.0
1532	Setto	1320	1349	1514	1485	1	15.0
1533	Setto	1321	1351	1516	1486	1	15.0
1534	Setto	1322	1353	1518	1487	1	15.0
1535	Setto	1323	1355	1520	1488	1	15.0
1536	Setto	1324	1357	1522	1489	1	15.0
1537	Setto	1325	1359	1524	1490	1	15.0
1538	Setto	1326	1361	1526	1491	1	15.0
1539	Setto	1327	1363	1528	1492	1	15.0
1540	Setto	1328	1365	1530	1493	1	15.0
1541	Setto	1329	1367	1532	1494	1	15.0
1542	Setto	1330	1369	1534	1495	1	15.0
1543	Setto	1331	1371	1536	1496	1	15.0
1544	Setto	1332	1373	1538	1497	1	15.0
1545	Setto	1333	1375	1540	1498	1	15.0
1546	Setto	1334	1377	1542	1499	1	15.0
1547	Setto	1335	1379	1544	1500	1	15.0
1548	Setto	1336	1381	1546	1501	1	15.0
1549	Setto	1502	1503	1338	1337	1	15.0
1550	Setto	1503	1504	1339	1338	1	15.0
1551	Setto	1504	1505	1340	1339	1	15.0
1552	Setto	1505	1506	1341	1340	1	15.0
1553	Setto	1506	1507	1342	1341	1	15.0
1554	Setto	1507	1508	1343	1342	1	15.0
1555	Setto	1508	1509	1344	1343	1	15.0
1556	Setto	1509	1510	1345	1344	1	15.0
1557	Setto	1510	1511	1346	1345	1	15.0
1558	Setto	1511	1512	1347	1346	1	15.0
1559	Setto	1512	1513	1348	1347	1	15.0
1560	Setto	1513	1514	1349	1348	1	15.0
1561	Setto	1514	1515	1350	1349	1	15.0
1562	Setto	1515	1516	1351	1350	1	15.0
1563	Setto	1516	1517	1352	1351	1	15.0
1564	Setto	1517	1518	1353	1352	1	15.0
1565	Setto	1518	1519	1354	1353	1	15.0
1566	Setto	1519	1520	1355	1354	1	15.0
1567	Setto	1520	1521	1356	1355	1	15.0
1568	Setto	1521	1522	1357	1356	1	15.0
1569	Setto	1522	1523	1358	1357	1	15.0
1570	Setto	1523	1524	1359	1358	1	15.0
1571	Setto	1524	1525	1360	1359	1	15.0
1572	Setto	1525	1526	1361	1360	1	15.0
1573	Setto	1526	1527	1362	1361	1	15.0
1574	Setto	1527	1528	1363	1362	1	15.0
1575	Setto	1528	1529	1364	1363	1	15.0
1576	Setto	1529	1530	1365	1364	1	15.0
1577	Setto	1530	1531	1366	1365	1	15.0
1578	Setto	1531	1532	1367	1366	1	15.0
1579	Setto	1532	1533	1368	1367	1	15.0
1580	Setto	1533	1534	1369	1368	1	15.0
1581	Setto	1534	1535	1370	1369	1	15.0
1582	Setto	1535	1536	1371	1370	1	15.0
1583	Setto	1536	1537	1372	1371	1	15.0
1584	Setto	1537	1538	1373	1372	1	15.0
1585	Setto	1538	1539	1374	1373	1	15.0
1586	Setto	1539	1540	1375	1374	1	15.0
1587	Setto	1540	1541	1376	1375	1	15.0
1588	Setto	1541	1542	1377	1376	1	15.0
1589	Setto	1542	1543	1378	1377	1	15.0
1590	Setto	1543	1544	1379	1378	1	15.0
1591	Setto	1544	1545	1380	1379	1	15.0
1592	Setto	1545	1546	1381	1380	1	15.0
1593	Setto	1382	1387	1552	1547	1	15.0
1594	Setto	1383	1392	1562	1548	1	15.0

1595	Setto	1384	1398	1574	1549	1	15.0
1596	Setto	1385	1404	1586	1550	1	15.0
1597	Setto	1386	1409	1596	1551	1	15.0
1598	Setto	1387	1410	1597	1552	1	15.0
1599	Setto	1388	1411	1599	1554	1	15.0
1600	Setto	1389	1412	1601	1556	1	15.0
1601	Setto	1390	1413	1603	1558	1	15.0
1602	Setto	1391	1414	1605	1560	1	15.0
1603	Setto	1392	1415	1607	1562	1	15.0
1604	Setto	1393	1416	1609	1564	1	15.0
1605	Setto	1394	1417	1611	1566	1	15.0
1606	Setto	1395	1418	1613	1568	1	15.0
1607	Setto	1396	1419	1615	1570	1	15.0
1608	Setto	1397	1420	1617	1572	1	15.0
1609	Setto	1398	1421	1619	1574	1	15.0
1610	Setto	1399	1422	1621	1576	1	15.0
1611	Setto	1400	1423	1623	1578	1	15.0
1612	Setto	1401	1424	1625	1580	1	15.0
1613	Setto	1402	1425	1627	1582	1	15.0
1614	Setto	1403	1426	1629	1584	1	15.0
1615	Setto	1404	1427	1631	1586	1	15.0
1616	Setto	1405	1428	1633	1588	1	15.0
1617	Setto	1406	1429	1635	1590	1	15.0
1618	Setto	1407	1430	1637	1592	1	15.0
1619	Setto	1408	1431	1639	1594	1	15.0
1620	Setto	1409	1432	1641	1596	1	15.0
1621	Setto	1410	1433	1642	1597	1	15.0
1622	Setto	1411	1434	1644	1599	1	15.0
1623	Setto	1412	1435	1646	1601	1	15.0
1624	Setto	1413	1436	1648	1603	1	15.0
1625	Setto	1414	1437	1650	1605	1	15.0
1626	Setto	1415	1438	1652	1607	1	15.0
1627	Setto	1416	1439	1654	1609	1	15.0
1628	Setto	1417	1440	1656	1611	1	15.0
1629	Setto	1418	1441	1658	1613	1	15.0
1630	Setto	1419	1442	1660	1615	1	15.0
1631	Setto	1420	1443	1662	1617	1	15.0
1632	Setto	1421	1444	1664	1619	1	15.0
1633	Setto	1422	1445	1666	1621	1	15.0
1634	Setto	1423	1446	1668	1623	1	15.0
1635	Setto	1424	1447	1670	1625	1	15.0
1636	Setto	1425	1448	1672	1627	1	15.0
1637	Setto	1426	1449	1674	1629	1	15.0
1638	Setto	1427	1450	1676	1631	1	15.0
1639	Setto	1428	1451	1678	1633	1	15.0
1640	Setto	1429	1452	1680	1635	1	15.0
1641	Setto	1430	1453	1682	1637	1	15.0
1642	Setto	1431	1454	1684	1639	1	15.0
1643	Setto	1432	1455	1686	1641	1	15.0
1644	Setto	1433	1456	1687	1642	1	15.0
1645	Setto	1434	1457	1689	1644	1	15.0
1646	Setto	1435	1458	1691	1646	1	15.0
1647	Setto	1436	1459	1693	1648	1	15.0
1648	Setto	1437	1460	1695	1650	1	15.0
1649	Setto	1438	1461	1697	1652	1	15.0
1650	Setto	1439	1462	1699	1654	1	15.0
1651	Setto	1440	1463	1701	1656	1	15.0
1652	Setto	1441	1464	1703	1658	1	15.0
1653	Setto	1442	1465	1705	1660	1	15.0
1654	Setto	1443	1466	1707	1662	1	15.0
1655	Setto	1444	1467	1709	1664	1	15.0
1656	Setto	1445	1468	1711	1666	1	15.0
1657	Setto	1446	1469	1713	1668	1	15.0
1658	Setto	1447	1470	1715	1670	1	15.0
1659	Setto	1448	1471	1717	1672	1	15.0
1660	Setto	1449	1472	1719	1674	1	15.0
1661	Setto	1450	1473	1721	1676	1	15.0
1662	Setto	1451	1474	1723	1678	1	15.0
1663	Setto	1452	1475	1725	1680	1	15.0
1664	Setto	1453	1476	1727	1682	1	15.0
1665	Setto	1454	1477	1729	1684	1	15.0
1666	Setto	1455	1478	1731	1686	1	15.0
1667	Setto	1456	1479	1732	1687	1	15.0
1668	Setto	1457	1480	1734	1689	1	15.0
1669	Setto	1458	1481	1736	1691	1	15.0
1670	Setto	1459	1482	1738	1693	1	15.0
1671	Setto	1460	1483	1740	1695	1	15.0
1672	Setto	1461	1484	1742	1697	1	15.0

1673	Setto	1462	1485	1744	1699	1	15.0
1674	Setto	1463	1486	1746	1701	1	15.0
1675	Setto	1464	1487	1748	1703	1	15.0
1676	Setto	1465	1488	1750	1705	1	15.0
1677	Setto	1466	1489	1752	1707	1	15.0
1678	Setto	1467	1490	1754	1709	1	15.0
1679	Setto	1468	1491	1756	1711	1	15.0
1680	Setto	1469	1492	1758	1713	1	15.0
1681	Setto	1470	1493	1760	1715	1	15.0
1682	Setto	1471	1494	1762	1717	1	15.0
1683	Setto	1472	1495	1764	1719	1	15.0
1684	Setto	1473	1496	1766	1721	1	15.0
1685	Setto	1474	1497	1768	1723	1	15.0
1686	Setto	1475	1498	1770	1725	1	15.0
1687	Setto	1476	1499	1772	1727	1	15.0
1688	Setto	1477	1500	1774	1729	1	15.0
1689	Setto	1478	1501	1776	1731	1	15.0
1690	Setto	1479	1502	1777	1732	1	15.0
1691	Setto	1480	1504	1779	1734	1	15.0
1692	Setto	1481	1506	1781	1736	1	15.0
1693	Setto	1482	1508	1783	1738	1	15.0
1694	Setto	1483	1510	1785	1740	1	15.0
1695	Setto	1484	1512	1787	1742	1	15.0
1696	Setto	1485	1514	1789	1744	1	15.0
1697	Setto	1486	1516	1791	1746	1	15.0
1698	Setto	1487	1518	1793	1748	1	15.0
1699	Setto	1488	1520	1795	1750	1	15.0
1700	Setto	1489	1522	1797	1752	1	15.0
1701	Setto	1490	1524	1799	1754	1	15.0
1702	Setto	1491	1526	1801	1756	1	15.0
1703	Setto	1492	1528	1803	1758	1	15.0
1704	Setto	1493	1530	1805	1760	1	15.0
1705	Setto	1494	1532	1807	1762	1	15.0
1706	Setto	1495	1534	1809	1764	1	15.0
1707	Setto	1496	1536	1811	1766	1	15.0
1708	Setto	1497	1538	1813	1768	1	15.0
1709	Setto	1498	1540	1815	1770	1	15.0
1710	Setto	1499	1542	1817	1772	1	15.0
1711	Setto	1500	1544	1819	1774	1	15.0
1712	Setto	1501	1546	1821	1776	1	15.0
1713	Setto	1777	1778	1503	1502	1	15.0
1714	Setto	1778	1779	1504	1503	1	15.0
1715	Setto	1779	1780	1505	1504	1	15.0
1716	Setto	1780	1781	1506	1505	1	15.0
1717	Setto	1781	1782	1507	1506	1	15.0
1718	Setto	1782	1783	1508	1507	1	15.0
1719	Setto	1783	1784	1509	1508	1	15.0
1720	Setto	1784	1785	1510	1509	1	15.0
1721	Setto	1785	1786	1511	1510	1	15.0
1722	Setto	1786	1787	1512	1511	1	15.0
1723	Setto	1787	1788	1513	1512	1	15.0
1724	Setto	1788	1789	1514	1513	1	15.0
1725	Setto	1789	1790	1515	1514	1	15.0
1726	Setto	1790	1791	1516	1515	1	15.0
1727	Setto	1791	1792	1517	1516	1	15.0
1728	Setto	1792	1793	1518	1517	1	15.0
1729	Setto	1793	1794	1519	1518	1	15.0
1730	Setto	1794	1795	1520	1519	1	15.0
1731	Setto	1795	1796	1521	1520	1	15.0
1732	Setto	1796	1797	1522	1521	1	15.0
1733	Setto	1797	1798	1523	1522	1	15.0
1734	Setto	1798	1799	1524	1523	1	15.0
1735	Setto	1799	1800	1525	1524	1	15.0
1736	Setto	1800	1801	1526	1525	1	15.0
1737	Setto	1801	1802	1527	1526	1	15.0
1738	Setto	1802	1803	1528	1527	1	15.0
1739	Setto	1803	1804	1529	1528	1	15.0
1740	Setto	1804	1805	1530	1529	1	15.0
1741	Setto	1805	1806	1531	1530	1	15.0
1742	Setto	1806	1807	1532	1531	1	15.0
1743	Setto	1807	1808	1533	1532	1	15.0
1744	Setto	1808	1809	1534	1533	1	15.0
1745	Setto	1809	1810	1535	1534	1	15.0
1746	Setto	1810	1811	1536	1535	1	15.0
1747	Setto	1811	1812	1537	1536	1	15.0
1748	Setto	1812	1813	1538	1537	1	15.0
1749	Setto	1813	1814	1539	1538	1	15.0
1750	Setto	1814	1815	1540	1539	1	15.0

1751	Setto	1815	1816	1541	1540	1	15.0
1752	Setto	1816	1817	1542	1541	1	15.0
1753	Setto	1817	1818	1543	1542	1	15.0
1754	Setto	1818	1819	1544	1543	1	15.0
1755	Setto	1819	1820	1545	1544	1	15.0
1756	Setto	1820	1821	1546	1545	1	15.0
1757	Guscio	1552	1553	1598	1597	1	15.0
1758	Guscio	1553	1554	1599	1598	1	15.0
1759	Guscio	1554	1555	1600	1599	1	15.0
1760	Guscio	1555	1556	1601	1600	1	15.0
1761	Guscio	1556	1557	1602	1601	1	15.0
1762	Guscio	1557	1558	1603	1602	1	15.0
1763	Guscio	1558	1559	1604	1603	1	15.0
1764	Guscio	1559	1560	1605	1604	1	15.0
1765	Guscio	1560	1561	1606	1605	1	15.0
1766	Guscio	1561	1562	1607	1606	1	15.0
1767	Guscio	1562	1563	1608	1607	1	15.0
1768	Guscio	1563	1564	1609	1608	1	15.0
1769	Guscio	1564	1565	1610	1609	1	15.0
1770	Guscio	1565	1566	1611	1610	1	15.0
1771	Guscio	1566	1567	1612	1611	1	15.0
1772	Guscio	1567	1568	1613	1612	1	15.0
1773	Guscio	1568	1569	1614	1613	1	15.0
1774	Guscio	1569	1570	1615	1614	1	15.0
1775	Guscio	1570	1571	1616	1615	1	15.0
1776	Guscio	1571	1572	1617	1616	1	15.0
1777	Guscio	1572	1573	1618	1617	1	15.0
1778	Guscio	1573	1574	1619	1618	1	15.0
1779	Guscio	1574	1575	1620	1619	1	15.0
1780	Guscio	1575	1576	1621	1620	1	15.0
1781	Guscio	1576	1577	1622	1621	1	15.0
1782	Guscio	1577	1578	1623	1622	1	15.0
1783	Guscio	1578	1579	1624	1623	1	15.0
1784	Guscio	1579	1580	1625	1624	1	15.0
1785	Guscio	1580	1581	1626	1625	1	15.0
1786	Guscio	1581	1582	1627	1626	1	15.0
1787	Guscio	1582	1583	1628	1627	1	15.0
1788	Guscio	1583	1584	1629	1628	1	15.0
1789	Guscio	1584	1585	1630	1629	1	15.0
1790	Guscio	1585	1586	1631	1630	1	15.0
1791	Guscio	1586	1587	1632	1631	1	15.0
1792	Guscio	1587	1588	1633	1632	1	15.0
1793	Guscio	1588	1589	1634	1633	1	15.0
1794	Guscio	1589	1590	1635	1634	1	15.0
1795	Guscio	1590	1591	1636	1635	1	15.0
1796	Guscio	1591	1592	1637	1636	1	15.0
1797	Guscio	1592	1593	1638	1637	1	15.0
1798	Guscio	1593	1594	1639	1638	1	15.0
1799	Guscio	1594	1595	1640	1639	1	15.0
1800	Guscio	1595	1596	1641	1640	1	15.0
1801	Guscio	1597	1598	1643	1642	1	15.0
1802	Guscio	1598	1599	1644	1643	1	15.0
1803	Guscio	1599	1600	1645	1644	1	15.0
1804	Guscio	1600	1601	1646	1645	1	15.0
1805	Guscio	1601	1602	1647	1646	1	15.0
1806	Guscio	1602	1603	1648	1647	1	15.0
1807	Guscio	1603	1604	1649	1648	1	15.0
1808	Guscio	1604	1605	1650	1649	1	15.0
1809	Guscio	1605	1606	1651	1650	1	15.0
1810	Guscio	1606	1607	1652	1651	1	15.0
1811	Guscio	1607	1608	1653	1652	1	15.0
1812	Guscio	1608	1609	1654	1653	1	15.0
1813	Guscio	1609	1610	1655	1654	1	15.0
1814	Guscio	1610	1611	1656	1655	1	15.0
1815	Guscio	1611	1612	1657	1656	1	15.0
1816	Guscio	1612	1613	1658	1657	1	15.0
1817	Guscio	1613	1614	1659	1658	1	15.0
1818	Guscio	1614	1615	1660	1659	1	15.0
1819	Guscio	1615	1616	1661	1660	1	15.0
1820	Guscio	1616	1617	1662	1661	1	15.0
1821	Guscio	1617	1618	1663	1662	1	15.0
1822	Guscio	1618	1619	1664	1663	1	15.0
1823	Guscio	1619	1620	1665	1664	1	15.0
1824	Guscio	1620	1621	1666	1665	1	15.0
1825	Guscio	1621	1622	1667	1666	1	15.0
1826	Guscio	1622	1623	1668	1667	1	15.0
1827	Guscio	1623	1624	1669	1668	1	15.0
1828	Guscio	1624	1625	1670	1669	1	15.0

1829	Guscio	1625	1626	1671	1670	1	15.0
1830	Guscio	1626	1627	1672	1671	1	15.0
1831	Guscio	1627	1628	1673	1672	1	15.0
1832	Guscio	1628	1629	1674	1673	1	15.0
1833	Guscio	1629	1630	1675	1674	1	15.0
1834	Guscio	1630	1631	1676	1675	1	15.0
1835	Guscio	1631	1632	1677	1676	1	15.0
1836	Guscio	1632	1633	1678	1677	1	15.0
1837	Guscio	1633	1634	1679	1678	1	15.0
1838	Guscio	1634	1635	1680	1679	1	15.0
1839	Guscio	1635	1636	1681	1680	1	15.0
1840	Guscio	1636	1637	1682	1681	1	15.0
1841	Guscio	1637	1638	1683	1682	1	15.0
1842	Guscio	1638	1639	1684	1683	1	15.0
1843	Guscio	1639	1640	1685	1684	1	15.0
1844	Guscio	1640	1641	1686	1685	1	15.0
1845	Guscio	1642	1643	1688	1687	1	15.0
1846	Guscio	1643	1644	1689	1688	1	15.0
1847	Guscio	1644	1645	1690	1689	1	15.0
1848	Guscio	1645	1646	1691	1690	1	15.0
1849	Guscio	1646	1647	1692	1691	1	15.0
1850	Guscio	1647	1648	1693	1692	1	15.0
1851	Guscio	1648	1649	1694	1693	1	15.0
1852	Guscio	1649	1650	1695	1694	1	15.0
1853	Guscio	1650	1651	1696	1695	1	15.0
1854	Guscio	1651	1652	1697	1696	1	15.0
1855	Guscio	1652	1653	1698	1697	1	15.0
1856	Guscio	1653	1654	1699	1698	1	15.0
1857	Guscio	1654	1655	1700	1699	1	15.0
1858	Guscio	1655	1656	1701	1700	1	15.0
1859	Guscio	1656	1657	1702	1701	1	15.0
1860	Guscio	1657	1658	1703	1702	1	15.0
1861	Guscio	1658	1659	1704	1703	1	15.0
1862	Guscio	1659	1660	1705	1704	1	15.0
1863	Guscio	1660	1661	1706	1705	1	15.0
1864	Guscio	1661	1662	1707	1706	1	15.0
1865	Guscio	1662	1663	1708	1707	1	15.0
1866	Guscio	1663	1664	1709	1708	1	15.0
1867	Guscio	1664	1665	1710	1709	1	15.0
1868	Guscio	1665	1666	1711	1710	1	15.0
1869	Guscio	1666	1667	1712	1711	1	15.0
1870	Guscio	1667	1668	1713	1712	1	15.0
1871	Guscio	1668	1669	1714	1713	1	15.0
1872	Guscio	1669	1670	1715	1714	1	15.0
1873	Guscio	1670	1671	1716	1715	1	15.0
1874	Guscio	1671	1672	1717	1716	1	15.0
1875	Guscio	1672	1673	1718	1717	1	15.0
1876	Guscio	1673	1674	1719	1718	1	15.0
1877	Guscio	1674	1675	1720	1719	1	15.0
1878	Guscio	1675	1676	1721	1720	1	15.0
1879	Guscio	1676	1677	1722	1721	1	15.0
1880	Guscio	1677	1678	1723	1722	1	15.0
1881	Guscio	1678	1679	1724	1723	1	15.0
1882	Guscio	1679	1680	1725	1724	1	15.0
1883	Guscio	1680	1681	1726	1725	1	15.0
1884	Guscio	1681	1682	1727	1726	1	15.0
1885	Guscio	1682	1683	1728	1727	1	15.0
1886	Guscio	1683	1684	1729	1728	1	15.0
1887	Guscio	1684	1685	1730	1729	1	15.0
1888	Guscio	1685	1686	1731	1730	1	15.0
1889	Guscio	1687	1688	1733	1732	1	15.0
1890	Guscio	1688	1689	1734	1733	1	15.0
1891	Guscio	1689	1690	1735	1734	1	15.0
1892	Guscio	1690	1691	1736	1735	1	15.0
1893	Guscio	1691	1692	1737	1736	1	15.0
1894	Guscio	1692	1693	1738	1737	1	15.0
1895	Guscio	1693	1694	1739	1738	1	15.0
1896	Guscio	1694	1695	1740	1739	1	15.0
1897	Guscio	1695	1696	1741	1740	1	15.0
1898	Guscio	1696	1697	1742	1741	1	15.0
1899	Guscio	1697	1698	1743	1742	1	15.0
1900	Guscio	1698	1699	1744	1743	1	15.0
1901	Guscio	1699	1700	1745	1744	1	15.0
1902	Guscio	1700	1701	1746	1745	1	15.0
1903	Guscio	1701	1702	1747	1746	1	15.0
1904	Guscio	1702	1703	1748	1747	1	15.0
1905	Guscio	1703	1704	1749	1748	1	15.0
1906	Guscio	1704	1705	1750	1749	1	15.0

1907	Guscio	1705	1706	1751	1750	1	15.0
1908	Guscio	1706	1707	1752	1751	1	15.0
1909	Guscio	1707	1708	1753	1752	1	15.0
1910	Guscio	1708	1709	1754	1753	1	15.0
1911	Guscio	1709	1710	1755	1754	1	15.0
1912	Guscio	1710	1711	1756	1755	1	15.0
1913	Guscio	1711	1712	1757	1756	1	15.0
1914	Guscio	1712	1713	1758	1757	1	15.0
1915	Guscio	1713	1714	1759	1758	1	15.0
1916	Guscio	1714	1715	1760	1759	1	15.0
1917	Guscio	1715	1716	1761	1760	1	15.0
1918	Guscio	1716	1717	1762	1761	1	15.0
1919	Guscio	1717	1718	1763	1762	1	15.0
1920	Guscio	1718	1719	1764	1763	1	15.0
1921	Guscio	1719	1720	1765	1764	1	15.0
1922	Guscio	1720	1721	1766	1765	1	15.0
1923	Guscio	1721	1722	1767	1766	1	15.0
1924	Guscio	1722	1723	1768	1767	1	15.0
1925	Guscio	1723	1724	1769	1768	1	15.0
1926	Guscio	1724	1725	1770	1769	1	15.0
1927	Guscio	1725	1726	1771	1770	1	15.0
1928	Guscio	1726	1727	1772	1771	1	15.0
1929	Guscio	1727	1728	1773	1772	1	15.0
1930	Guscio	1728	1729	1774	1773	1	15.0
1931	Guscio	1729	1730	1775	1774	1	15.0
1932	Guscio	1730	1731	1776	1775	1	15.0
1933	Guscio	1732	1733	1778	1777	1	15.0
1934	Guscio	1733	1734	1779	1778	1	15.0
1935	Guscio	1734	1735	1780	1779	1	15.0
1936	Guscio	1735	1736	1781	1780	1	15.0
1937	Guscio	1736	1737	1782	1781	1	15.0
1938	Guscio	1737	1738	1783	1782	1	15.0
1939	Guscio	1738	1739	1784	1783	1	15.0
1940	Guscio	1739	1740	1785	1784	1	15.0
1941	Guscio	1740	1741	1786	1785	1	15.0
1942	Guscio	1741	1742	1787	1786	1	15.0
1943	Guscio	1742	1743	1788	1787	1	15.0
1944	Guscio	1743	1744	1789	1788	1	15.0
1945	Guscio	1744	1745	1790	1789	1	15.0
1946	Guscio	1745	1746	1791	1790	1	15.0
1947	Guscio	1746	1747	1792	1791	1	15.0
1948	Guscio	1747	1748	1793	1792	1	15.0
1949	Guscio	1748	1749	1794	1793	1	15.0
1950	Guscio	1749	1750	1795	1794	1	15.0
1951	Guscio	1750	1751	1796	1795	1	15.0
1952	Guscio	1751	1752	1797	1796	1	15.0
1953	Guscio	1752	1753	1798	1797	1	15.0
1954	Guscio	1753	1754	1799	1798	1	15.0
1955	Guscio	1754	1755	1800	1799	1	15.0
1956	Guscio	1755	1756	1801	1800	1	15.0
1957	Guscio	1756	1757	1802	1801	1	15.0
1958	Guscio	1757	1758	1803	1802	1	15.0
1959	Guscio	1758	1759	1804	1803	1	15.0
1960	Guscio	1759	1760	1805	1804	1	15.0
1961	Guscio	1760	1761	1806	1805	1	15.0
1962	Guscio	1761	1762	1807	1806	1	15.0
1963	Guscio	1762	1763	1808	1807	1	15.0
1964	Guscio	1763	1764	1809	1808	1	15.0
1965	Guscio	1764	1765	1810	1809	1	15.0
1966	Guscio	1765	1766	1811	1810	1	15.0
1967	Guscio	1766	1767	1812	1811	1	15.0
1968	Guscio	1767	1768	1813	1812	1	15.0
1969	Guscio	1768	1769	1814	1813	1	15.0
1970	Guscio	1769	1770	1815	1814	1	15.0
1971	Guscio	1770	1771	1816	1815	1	15.0
1972	Guscio	1771	1772	1817	1816	1	15.0
1973	Guscio	1772	1773	1818	1817	1	15.0
1974	Guscio	1773	1774	1819	1818	1	15.0
1975	Guscio	1774	1775	1820	1819	1	15.0
1976	Guscio	1775	1776	1821	1820	1	15.0
1977	Setto	1547	1552	1827	1822	1	15.0
1978	Setto	1548	1562	1832	1823	1	15.0
1979	Setto	1549	1574	1838	1824	1	15.0
1980	Setto	1550	1586	1844	1825	1	15.0
1981	Setto	1551	1596	1849	1826	1	15.0
1982	Setto	1552	1597	1850	1827	1	15.0
1983	Setto	1554	1599	1851	1828	1	15.0
1984	Setto	1556	1601	1852	1829	1	15.0

1985	Setto	1558	1603	1853	1830	1	15.0
1986	Setto	1560	1605	1854	1831	1	15.0
1987	Setto	1562	1607	1855	1832	1	15.0
1988	Setto	1564	1609	1856	1833	1	15.0
1989	Setto	1566	1611	1857	1834	1	15.0
1990	Setto	1568	1613	1858	1835	1	15.0
1991	Setto	1570	1615	1859	1836	1	15.0
1992	Setto	1572	1617	1860	1837	1	15.0
1993	Setto	1574	1619	1861	1838	1	15.0
1994	Setto	1576	1621	1862	1839	1	15.0
1995	Setto	1578	1623	1863	1840	1	15.0
1996	Setto	1580	1625	1864	1841	1	15.0
1997	Setto	1582	1627	1865	1842	1	15.0
1998	Setto	1584	1629	1866	1843	1	15.0
1999	Setto	1586	1631	1867	1844	1	15.0
2000	Setto	1588	1633	1868	1845	1	15.0
2001	Setto	1590	1635	1869	1846	1	15.0
2002	Setto	1592	1637	1870	1847	1	15.0
2003	Setto	1594	1639	1871	1848	1	15.0
2004	Setto	1596	1641	1872	1849	1	15.0
2005	Setto	1597	1642	1873	1850	1	15.0
2006	Setto	1599	1644	1874	1851	1	15.0
2007	Setto	1601	1646	1875	1852	1	15.0
2008	Setto	1603	1648	1876	1853	1	15.0
2009	Setto	1605	1650	1877	1854	1	15.0
2010	Setto	1607	1652	1878	1855	1	15.0
2011	Setto	1609	1654	1879	1856	1	15.0
2012	Setto	1611	1656	1880	1857	1	15.0
2013	Setto	1613	1658	1881	1858	1	15.0
2014	Setto	1615	1660	1882	1859	1	15.0
2015	Setto	1617	1662	1883	1860	1	15.0
2016	Setto	1619	1664	1884	1861	1	15.0
2017	Setto	1621	1666	1885	1862	1	15.0
2018	Setto	1623	1668	1886	1863	1	15.0
2019	Setto	1625	1670	1887	1864	1	15.0
2020	Setto	1627	1672	1888	1865	1	15.0
2021	Setto	1629	1674	1889	1866	1	15.0
2022	Setto	1631	1676	1890	1867	1	15.0
2023	Setto	1633	1678	1891	1868	1	15.0
2024	Setto	1635	1680	1892	1869	1	15.0
2025	Setto	1637	1682	1893	1870	1	15.0
2026	Setto	1639	1684	1894	1871	1	15.0
2027	Setto	1641	1686	1895	1872	1	15.0
2028	Setto	1642	1687	1896	1873	1	15.0
2029	Setto	1644	1689	1897	1874	1	15.0
2030	Setto	1646	1691	1898	1875	1	15.0
2031	Setto	1648	1693	1899	1876	1	15.0
2032	Setto	1650	1695	1900	1877	1	15.0
2033	Setto	1652	1697	1901	1878	1	15.0
2034	Setto	1654	1699	1902	1879	1	15.0
2035	Setto	1656	1701	1903	1880	1	15.0
2036	Setto	1658	1703	1904	1881	1	15.0
2037	Setto	1660	1705	1905	1882	1	15.0
2038	Setto	1662	1707	1906	1883	1	15.0
2039	Setto	1664	1709	1907	1884	1	15.0
2040	Setto	1666	1711	1908	1885	1	15.0
2041	Setto	1668	1713	1909	1886	1	15.0
2042	Setto	1670	1715	1910	1887	1	15.0
2043	Setto	1672	1717	1911	1888	1	15.0
2044	Setto	1674	1719	1912	1889	1	15.0
2045	Setto	1676	1721	1913	1890	1	15.0
2046	Setto	1678	1723	1914	1891	1	15.0
2047	Setto	1680	1725	1915	1892	1	15.0
2048	Setto	1682	1727	1916	1893	1	15.0
2049	Setto	1684	1729	1917	1894	1	15.0
2050	Setto	1686	1731	1918	1895	1	15.0
2051	Setto	1687	1732	1919	1896	1	15.0
2052	Setto	1689	1734	1920	1897	1	15.0
2053	Setto	1691	1736	1921	1898	1	15.0
2054	Setto	1693	1738	1922	1899	1	15.0
2055	Setto	1695	1740	1923	1900	1	15.0
2056	Setto	1697	1742	1924	1901	1	15.0
2057	Setto	1699	1744	1925	1902	1	15.0
2058	Setto	1701	1746	1926	1903	1	15.0
2059	Setto	1703	1748	1927	1904	1	15.0
2060	Setto	1705	1750	1928	1905	1	15.0
2061	Setto	1707	1752	1929	1906	1	15.0
2062	Setto	1709	1754	1930	1907	1	15.0

2063	Setto	1711	1756	1931	1908	1	15.0
2064	Setto	1713	1758	1932	1909	1	15.0
2065	Setto	1715	1760	1933	1910	1	15.0
2066	Setto	1717	1762	1934	1911	1	15.0
2067	Setto	1719	1764	1935	1912	1	15.0
2068	Setto	1721	1766	1936	1913	1	15.0
2069	Setto	1723	1768	1937	1914	1	15.0
2070	Setto	1725	1770	1938	1915	1	15.0
2071	Setto	1727	1772	1939	1916	1	15.0
2072	Setto	1729	1774	1940	1917	1	15.0
2073	Setto	1731	1776	1941	1918	1	15.0
2074	Setto	1732	1777	1942	1919	1	15.0
2075	Setto	1734	1779	1944	1920	1	15.0
2076	Setto	1736	1781	1946	1921	1	15.0
2077	Setto	1738	1783	1948	1922	1	15.0
2078	Setto	1740	1785	1950	1923	1	15.0
2079	Setto	1742	1787	1952	1924	1	15.0
2080	Setto	1744	1789	1954	1925	1	15.0
2081	Setto	1746	1791	1956	1926	1	15.0
2082	Setto	1748	1793	1958	1927	1	15.0
2083	Setto	1750	1795	1960	1928	1	15.0
2084	Setto	1752	1797	1962	1929	1	15.0
2085	Setto	1754	1799	1964	1930	1	15.0
2086	Setto	1756	1801	1966	1931	1	15.0
2087	Setto	1758	1803	1968	1932	1	15.0
2088	Setto	1760	1805	1970	1933	1	15.0
2089	Setto	1762	1807	1972	1934	1	15.0
2090	Setto	1764	1809	1974	1935	1	15.0
2091	Setto	1766	1811	1976	1936	1	15.0
2092	Setto	1768	1813	1978	1937	1	15.0
2093	Setto	1770	1815	1980	1938	1	15.0
2094	Setto	1772	1817	1982	1939	1	15.0
2095	Setto	1774	1819	1984	1940	1	15.0
2096	Setto	1776	1821	1986	1941	1	15.0
2097	Setto	1942	1943	1778	1777	1	15.0
2098	Setto	1943	1944	1779	1778	1	15.0
2099	Setto	1944	1945	1780	1779	1	15.0
2100	Setto	1945	1946	1781	1780	1	15.0
2101	Setto	1946	1947	1782	1781	1	15.0
2102	Setto	1947	1948	1783	1782	1	15.0
2103	Setto	1948	1949	1784	1783	1	15.0
2104	Setto	1949	1950	1785	1784	1	15.0
2105	Setto	1950	1951	1786	1785	1	15.0
2106	Setto	1951	1952	1787	1786	1	15.0
2107	Setto	1952	1953	1788	1787	1	15.0
2108	Setto	1953	1954	1789	1788	1	15.0
2109	Setto	1954	1955	1790	1789	1	15.0
2110	Setto	1955	1956	1791	1790	1	15.0
2111	Setto	1956	1957	1792	1791	1	15.0
2112	Setto	1957	1958	1793	1792	1	15.0
2113	Setto	1958	1959	1794	1793	1	15.0
2114	Setto	1959	1960	1795	1794	1	15.0
2115	Setto	1960	1961	1796	1795	1	15.0
2116	Setto	1961	1962	1797	1796	1	15.0
2117	Setto	1962	1963	1798	1797	1	15.0
2118	Setto	1963	1964	1799	1798	1	15.0
2119	Setto	1964	1965	1800	1799	1	15.0
2120	Setto	1965	1966	1801	1800	1	15.0
2121	Setto	1966	1967	1802	1801	1	15.0
2122	Setto	1967	1968	1803	1802	1	15.0
2123	Setto	1968	1969	1804	1803	1	15.0
2124	Setto	1969	1970	1805	1804	1	15.0
2125	Setto	1970	1971	1806	1805	1	15.0
2126	Setto	1971	1972	1807	1806	1	15.0
2127	Setto	1972	1973	1808	1807	1	15.0
2128	Setto	1973	1974	1809	1808	1	15.0
2129	Setto	1974	1975	1810	1809	1	15.0
2130	Setto	1975	1976	1811	1810	1	15.0
2131	Setto	1976	1977	1812	1811	1	15.0
2132	Setto	1977	1978	1813	1812	1	15.0
2133	Setto	1978	1979	1814	1813	1	15.0
2134	Setto	1979	1980	1815	1814	1	15.0
2135	Setto	1980	1981	1816	1815	1	15.0
2136	Setto	1981	1982	1817	1816	1	15.0
2137	Setto	1982	1983	1818	1817	1	15.0
2138	Setto	1983	1984	1819	1818	1	15.0
2139	Setto	1984	1985	1820	1819	1	15.0
2140	Setto	1985	1986	1821	1820	1	15.0

2141	Setto	1822	1827	1992	1987	1	15.0
2142	Setto	1823	1832	1997	1988	1	15.0
2143	Setto	1824	1838	2003	1989	1	15.0
2144	Setto	1825	1844	2009	1990	1	15.0
2145	Setto	1826	1849	2014	1991	1	15.0
2146	Setto	1827	1850	2015	1992	1	15.0
2147	Setto	1828	1851	2016	1993	1	15.0
2148	Setto	1829	1852	2017	1994	1	15.0
2149	Setto	1830	1853	2018	1995	1	15.0
2150	Setto	1831	1854	2019	1996	1	15.0
2151	Setto	1832	1855	2020	1997	1	15.0
2152	Setto	1833	1856	2021	1998	1	15.0
2153	Setto	1834	1857	2022	1999	1	15.0
2154	Setto	1835	1858	2023	2000	1	15.0
2155	Setto	1836	1859	2024	2001	1	15.0
2156	Setto	1837	1860	2025	2002	1	15.0
2157	Setto	1838	1861	2026	2003	1	15.0
2158	Setto	1839	1862	2027	2004	1	15.0
2159	Setto	1840	1863	2028	2005	1	15.0
2160	Setto	1841	1864	2029	2006	1	15.0
2161	Setto	1842	1865	2030	2007	1	15.0
2162	Setto	1843	1866	2031	2008	1	15.0
2163	Setto	1844	1867	2032	2009	1	15.0
2164	Setto	1845	1868	2033	2010	1	15.0
2165	Setto	1846	1869	2034	2011	1	15.0
2166	Setto	1847	1870	2035	2012	1	15.0
2167	Setto	1848	1871	2036	2013	1	15.0
2168	Setto	1849	1872	2037	2014	1	15.0
2169	Setto	1850	1873	2038	2015	1	15.0
2170	Setto	1851	1874	2039	2016	1	15.0
2171	Setto	1852	1875	2040	2017	1	15.0
2172	Setto	1853	1876	2041	2018	1	15.0
2173	Setto	1854	1877	2042	2019	1	15.0
2174	Setto	1855	1878	2043	2020	1	15.0
2175	Setto	1856	1879	2044	2021	1	15.0
2176	Setto	1857	1880	2045	2022	1	15.0
2177	Setto	1858	1881	2046	2023	1	15.0
2178	Setto	1859	1882	2047	2024	1	15.0
2179	Setto	1860	1883	2048	2025	1	15.0
2180	Setto	1861	1884	2049	2026	1	15.0
2181	Setto	1862	1885	2050	2027	1	15.0
2182	Setto	1863	1886	2051	2028	1	15.0
2183	Setto	1864	1887	2052	2029	1	15.0
2184	Setto	1865	1888	2053	2030	1	15.0
2185	Setto	1866	1889	2054	2031	1	15.0
2186	Setto	1867	1890	2055	2032	1	15.0
2187	Setto	1868	1891	2056	2033	1	15.0
2188	Setto	1869	1892	2057	2034	1	15.0
2189	Setto	1870	1893	2058	2035	1	15.0
2190	Setto	1871	1894	2059	2036	1	15.0
2191	Setto	1872	1895	2060	2037	1	15.0
2192	Setto	1873	1896	2061	2038	1	15.0
2193	Setto	1874	1897	2062	2039	1	15.0
2194	Setto	1875	1898	2063	2040	1	15.0
2195	Setto	1876	1899	2064	2041	1	15.0
2196	Setto	1877	1900	2065	2042	1	15.0
2197	Setto	1878	1901	2066	2043	1	15.0
2198	Setto	1879	1902	2067	2044	1	15.0
2199	Setto	1880	1903	2068	2045	1	15.0
2200	Setto	1881	1904	2069	2046	1	15.0
2201	Setto	1882	1905	2070	2047	1	15.0
2202	Setto	1883	1906	2071	2048	1	15.0
2203	Setto	1884	1907	2072	2049	1	15.0
2204	Setto	1885	1908	2073	2050	1	15.0
2205	Setto	1886	1909	2074	2051	1	15.0
2206	Setto	1887	1910	2075	2052	1	15.0
2207	Setto	1888	1911	2076	2053	1	15.0
2208	Setto	1889	1912	2077	2054	1	15.0
2209	Setto	1890	1913	2078	2055	1	15.0
2210	Setto	1891	1914	2079	2056	1	15.0
2211	Setto	1892	1915	2080	2057	1	15.0
2212	Setto	1893	1916	2081	2058	1	15.0
2213	Setto	1894	1917	2082	2059	1	15.0
2214	Setto	1895	1918	2083	2060	1	15.0
2215	Setto	1896	1919	2084	2061	1	15.0
2216	Setto	1897	1920	2085	2062	1	15.0
2217	Setto	1898	1921	2086	2063	1	15.0
2218	Setto	1899	1922	2087	2064	1	15.0

2219	Setto	1900	1923	2088	2065	1	15.0
2220	Setto	1901	1924	2089	2066	1	15.0
2221	Setto	1902	1925	2090	2067	1	15.0
2222	Setto	1903	1926	2091	2068	1	15.0
2223	Setto	1904	1927	2092	2069	1	15.0
2224	Setto	1905	1928	2093	2070	1	15.0
2225	Setto	1906	1929	2094	2071	1	15.0
2226	Setto	1907	1930	2095	2072	1	15.0
2227	Setto	1908	1931	2096	2073	1	15.0
2228	Setto	1909	1932	2097	2074	1	15.0
2229	Setto	1910	1933	2098	2075	1	15.0
2230	Setto	1911	1934	2099	2076	1	15.0
2231	Setto	1912	1935	2100	2077	1	15.0
2232	Setto	1913	1936	2101	2078	1	15.0
2233	Setto	1914	1937	2102	2079	1	15.0
2234	Setto	1915	1938	2103	2080	1	15.0
2235	Setto	1916	1939	2104	2081	1	15.0
2236	Setto	1917	1940	2105	2082	1	15.0
2237	Setto	1918	1941	2106	2083	1	15.0
2238	Setto	1919	1942	2107	2084	1	15.0
2239	Setto	1920	1944	2109	2085	1	15.0
2240	Setto	1921	1946	2111	2086	1	15.0
2241	Setto	1922	1948	2113	2087	1	15.0
2242	Setto	1923	1950	2115	2088	1	15.0
2243	Setto	1924	1952	2117	2089	1	15.0
2244	Setto	1925	1954	2119	2090	1	15.0
2245	Setto	1926	1956	2121	2091	1	15.0
2246	Setto	1927	1958	2123	2092	1	15.0
2247	Setto	1928	1960	2125	2093	1	15.0
2248	Setto	1929	1962	2127	2094	1	15.0
2249	Setto	1930	1964	2129	2095	1	15.0
2250	Setto	1931	1966	2131	2096	1	15.0
2251	Setto	1932	1968	2133	2097	1	15.0
2252	Setto	1933	1970	2135	2098	1	15.0
2253	Setto	1934	1972	2137	2099	1	15.0
2254	Setto	1935	1974	2139	2100	1	15.0
2255	Setto	1936	1976	2141	2101	1	15.0
2256	Setto	1937	1978	2143	2102	1	15.0
2257	Setto	1938	1980	2145	2103	1	15.0
2258	Setto	1939	1982	2147	2104	1	15.0
2259	Setto	1940	1984	2149	2105	1	15.0
2260	Setto	1941	1986	2151	2106	1	15.0
2261	Setto	2107	2108	1943	1942	1	15.0
2262	Setto	2108	2109	1944	1943	1	15.0
2263	Setto	2109	2110	1945	1944	1	15.0
2264	Setto	2110	2111	1946	1945	1	15.0
2265	Setto	2111	2112	1947	1946	1	15.0
2266	Setto	2112	2113	1948	1947	1	15.0
2267	Setto	2113	2114	1949	1948	1	15.0
2268	Setto	2114	2115	1950	1949	1	15.0
2269	Setto	2115	2116	1951	1950	1	15.0
2270	Setto	2116	2117	1952	1951	1	15.0
2271	Setto	2117	2118	1953	1952	1	15.0
2272	Setto	2118	2119	1954	1953	1	15.0
2273	Setto	2119	2120	1955	1954	1	15.0
2274	Setto	2120	2121	1956	1955	1	15.0
2275	Setto	2121	2122	1957	1956	1	15.0
2276	Setto	2122	2123	1958	1957	1	15.0
2277	Setto	2123	2124	1959	1958	1	15.0
2278	Setto	2124	2125	1960	1959	1	15.0
2279	Setto	2125	2126	1961	1960	1	15.0
2280	Setto	2126	2127	1962	1961	1	15.0
2281	Setto	2127	2128	1963	1962	1	15.0
2282	Setto	2128	2129	1964	1963	1	15.0
2283	Setto	2129	2130	1965	1964	1	15.0
2284	Setto	2130	2131	1966	1965	1	15.0
2285	Setto	2131	2132	1967	1966	1	15.0
2286	Setto	2132	2133	1968	1967	1	15.0
2287	Setto	2133	2134	1969	1968	1	15.0
2288	Setto	2134	2135	1970	1969	1	15.0
2289	Setto	2135	2136	1971	1970	1	15.0
2290	Setto	2136	2137	1972	1971	1	15.0
2291	Setto	2137	2138	1973	1972	1	15.0
2292	Setto	2138	2139	1974	1973	1	15.0
2293	Setto	2139	2140	1975	1974	1	15.0
2294	Setto	2140	2141	1976	1975	1	15.0
2295	Setto	2141	2142	1977	1976	1	15.0
2296	Setto	2142	2143	1978	1977	1	15.0

2297	Setto	2143	2144	1979	1978	1	15.0
2298	Setto	2144	2145	1980	1979	1	15.0
2299	Setto	2145	2146	1981	1980	1	15.0
2300	Setto	2146	2147	1982	1981	1	15.0
2301	Setto	2147	2148	1983	1982	1	15.0
2302	Setto	2148	2149	1984	1983	1	15.0
2303	Setto	2149	2150	1985	1984	1	15.0
2304	Setto	2150	2151	1986	1985	1	15.0
2305	Setto	1987	1992	2157	2152	1	15.0
2306	Setto	1988	1997	2167	2153	1	15.0
2307	Setto	1989	2003	2179	2154	1	15.0
2308	Setto	1990	2009	2191	2155	1	15.0
2309	Setto	1991	2014	2201	2156	1	15.0
2310	Setto	1992	2015	2202	2157	1	15.0
2311	Setto	1993	2016	2204	2159	1	15.0
2312	Setto	1994	2017	2206	2161	1	15.0
2313	Setto	1995	2018	2208	2163	1	15.0
2314	Setto	1996	2019	2210	2165	1	15.0
2315	Setto	1997	2020	2212	2167	1	15.0
2316	Setto	1998	2021	2214	2169	1	15.0
2317	Setto	1999	2022	2216	2171	1	15.0
2318	Setto	2000	2023	2218	2173	1	15.0
2319	Setto	2001	2024	2220	2175	1	15.0
2320	Setto	2002	2025	2222	2177	1	15.0
2321	Setto	2003	2026	2224	2179	1	15.0
2322	Setto	2004	2027	2226	2181	1	15.0
2323	Setto	2005	2028	2228	2183	1	15.0
2324	Setto	2006	2029	2230	2185	1	15.0
2325	Setto	2007	2030	2232	2187	1	15.0
2326	Setto	2008	2031	2234	2189	1	15.0
2327	Setto	2009	2032	2236	2191	1	15.0
2328	Setto	2010	2033	2238	2193	1	15.0
2329	Setto	2011	2034	2240	2195	1	15.0
2330	Setto	2012	2035	2242	2197	1	15.0
2331	Setto	2013	2036	2244	2199	1	15.0
2332	Setto	2014	2037	2246	2201	1	15.0
2333	Setto	2015	2038	2247	2202	1	15.0
2334	Setto	2016	2039	2249	2204	1	15.0
2335	Setto	2017	2040	2251	2206	1	15.0
2336	Setto	2018	2041	2253	2208	1	15.0
2337	Setto	2019	2042	2255	2210	1	15.0
2338	Setto	2020	2043	2257	2212	1	15.0
2339	Setto	2021	2044	2259	2214	1	15.0
2340	Setto	2022	2045	2261	2216	1	15.0
2341	Setto	2023	2046	2263	2218	1	15.0
2342	Setto	2024	2047	2265	2220	1	15.0
2343	Setto	2025	2048	2267	2222	1	15.0
2344	Setto	2026	2049	2269	2224	1	15.0
2345	Setto	2027	2050	2271	2226	1	15.0
2346	Setto	2028	2051	2273	2228	1	15.0
2347	Setto	2029	2052	2275	2230	1	15.0
2348	Setto	2030	2053	2277	2232	1	15.0
2349	Setto	2031	2054	2279	2234	1	15.0
2350	Setto	2032	2055	2281	2236	1	15.0
2351	Setto	2033	2056	2283	2238	1	15.0
2352	Setto	2034	2057	2285	2240	1	15.0
2353	Setto	2035	2058	2287	2242	1	15.0
2354	Setto	2036	2059	2289	2244	1	15.0
2355	Setto	2037	2060	2291	2246	1	15.0
2356	Setto	2038	2061	2292	2247	1	15.0
2357	Setto	2039	2062	2294	2249	1	15.0
2358	Setto	2040	2063	2296	2251	1	15.0
2359	Setto	2041	2064	2298	2253	1	15.0
2360	Setto	2042	2065	2300	2255	1	15.0
2361	Setto	2043	2066	2302	2257	1	15.0
2362	Setto	2044	2067	2304	2259	1	15.0
2363	Setto	2045	2068	2306	2261	1	15.0
2364	Setto	2046	2069	2308	2263	1	15.0
2365	Setto	2047	2070	2310	2265	1	15.0
2366	Setto	2048	2071	2312	2267	1	15.0
2367	Setto	2049	2072	2314	2269	1	15.0
2368	Setto	2050	2073	2316	2271	1	15.0
2369	Setto	2051	2074	2318	2273	1	15.0
2370	Setto	2052	2075	2320	2275	1	15.0
2371	Setto	2053	2076	2322	2277	1	15.0
2372	Setto	2054	2077	2324	2279	1	15.0
2373	Setto	2055	2078	2326	2281	1	15.0
2374	Setto	2056	2079	2328	2283	1	15.0

2375	Setto	2057	2080	2330	2285	1	15.0
2376	Setto	2058	2081	2332	2287	1	15.0
2377	Setto	2059	2082	2334	2289	1	15.0
2378	Setto	2060	2083	2336	2291	1	15.0
2379	Setto	2061	2084	2337	2292	1	15.0
2380	Setto	2062	2085	2339	2294	1	15.0
2381	Setto	2063	2086	2341	2296	1	15.0
2382	Setto	2064	2087	2343	2298	1	15.0
2383	Setto	2065	2088	2345	2300	1	15.0
2384	Setto	2066	2089	2347	2302	1	15.0
2385	Setto	2067	2090	2349	2304	1	15.0
2386	Setto	2068	2091	2351	2306	1	15.0
2387	Setto	2069	2092	2353	2308	1	15.0
2388	Setto	2070	2093	2355	2310	1	15.0
2389	Setto	2071	2094	2357	2312	1	15.0
2390	Setto	2072	2095	2359	2314	1	15.0
2391	Setto	2073	2096	2361	2316	1	15.0
2392	Setto	2074	2097	2363	2318	1	15.0
2393	Setto	2075	2098	2365	2320	1	15.0
2394	Setto	2076	2099	2367	2322	1	15.0
2395	Setto	2077	2100	2369	2324	1	15.0
2396	Setto	2078	2101	2371	2326	1	15.0
2397	Setto	2079	2102	2373	2328	1	15.0
2398	Setto	2080	2103	2375	2330	1	15.0
2399	Setto	2081	2104	2377	2332	1	15.0
2400	Setto	2082	2105	2379	2334	1	15.0
2401	Setto	2083	2106	2381	2336	1	15.0
2402	Setto	2084	2107	2382	2337	1	15.0
2403	Setto	2085	2109	2384	2339	1	15.0
2404	Setto	2086	2111	2386	2341	1	15.0
2405	Setto	2087	2113	2388	2343	1	15.0
2406	Setto	2088	2115	2390	2345	1	15.0
2407	Setto	2089	2117	2392	2347	1	15.0
2408	Setto	2090	2119	2394	2349	1	15.0
2409	Setto	2091	2121	2396	2351	1	15.0
2410	Setto	2092	2123	2398	2353	1	15.0
2411	Setto	2093	2125	2400	2355	1	15.0
2412	Setto	2094	2127	2402	2357	1	15.0
2413	Setto	2095	2129	2404	2359	1	15.0
2414	Setto	2096	2131	2406	2361	1	15.0
2415	Setto	2097	2133	2408	2363	1	15.0
2416	Setto	2098	2135	2410	2365	1	15.0
2417	Setto	2099	2137	2412	2367	1	15.0
2418	Setto	2100	2139	2414	2369	1	15.0
2419	Setto	2101	2141	2416	2371	1	15.0
2420	Setto	2102	2143	2418	2373	1	15.0
2421	Setto	2103	2145	2420	2375	1	15.0
2422	Setto	2104	2147	2422	2377	1	15.0
2423	Setto	2105	2149	2424	2379	1	15.0
2424	Setto	2106	2151	2426	2381	1	15.0
2425	Setto	2382	2383	2108	2107	1	15.0
2426	Setto	2383	2384	2109	2108	1	15.0
2427	Setto	2384	2385	2110	2109	1	15.0
2428	Setto	2385	2386	2111	2110	1	15.0
2429	Setto	2386	2387	2112	2111	1	15.0
2430	Setto	2387	2388	2113	2112	1	15.0
2431	Setto	2388	2389	2114	2113	1	15.0
2432	Setto	2389	2390	2115	2114	1	15.0
2433	Setto	2390	2391	2116	2115	1	15.0
2434	Setto	2391	2392	2117	2116	1	15.0
2435	Setto	2392	2393	2118	2117	1	15.0
2436	Setto	2393	2394	2119	2118	1	15.0
2437	Setto	2394	2395	2120	2119	1	15.0
2438	Setto	2395	2396	2121	2120	1	15.0
2439	Setto	2396	2397	2122	2121	1	15.0
2440	Setto	2397	2398	2123	2122	1	15.0
2441	Setto	2398	2399	2124	2123	1	15.0
2442	Setto	2399	2400	2125	2124	1	15.0
2443	Setto	2400	2401	2126	2125	1	15.0
2444	Setto	2401	2402	2127	2126	1	15.0
2445	Setto	2402	2403	2128	2127	1	15.0
2446	Setto	2403	2404	2129	2128	1	15.0
2447	Setto	2404	2405	2130	2129	1	15.0
2448	Setto	2405	2406	2131	2130	1	15.0
2449	Setto	2406	2407	2132	2131	1	15.0
2450	Setto	2407	2408	2133	2132	1	15.0
2451	Setto	2408	2409	2134	2133	1	15.0
2452	Setto	2409	2410	2135	2134	1	15.0

2453	Setto	2410	2411	2136	2135	1	15.0
2454	Setto	2411	2412	2137	2136	1	15.0
2455	Setto	2412	2413	2138	2137	1	15.0
2456	Setto	2413	2414	2139	2138	1	15.0
2457	Setto	2414	2415	2140	2139	1	15.0
2458	Setto	2415	2416	2141	2140	1	15.0
2459	Setto	2416	2417	2142	2141	1	15.0
2460	Setto	2417	2418	2143	2142	1	15.0
2461	Setto	2418	2419	2144	2143	1	15.0
2462	Setto	2419	2420	2145	2144	1	15.0
2463	Setto	2420	2421	2146	2145	1	15.0
2464	Setto	2421	2422	2147	2146	1	15.0
2465	Setto	2422	2423	2148	2147	1	15.0
2466	Setto	2423	2424	2149	2148	1	15.0
2467	Setto	2424	2425	2150	2149	1	15.0
2468	Setto	2425	2426	2151	2150	1	15.0
2469	Guscio	2157	2158	2203	2202	1	15.0
2470	Guscio	2158	2159	2204	2203	1	15.0
2471	Guscio	2159	2160	2205	2204	1	15.0
2472	Guscio	2160	2161	2206	2205	1	15.0
2473	Guscio	2161	2162	2207	2206	1	15.0
2474	Guscio	2162	2163	2208	2207	1	15.0
2475	Guscio	2163	2164	2209	2208	1	15.0
2476	Guscio	2164	2165	2210	2209	1	15.0
2477	Guscio	2165	2166	2211	2210	1	15.0
2478	Guscio	2166	2167	2212	2211	1	15.0
2479	Guscio	2167	2168	2213	2212	1	15.0
2480	Guscio	2168	2169	2214	2213	1	15.0
2481	Guscio	2169	2170	2215	2214	1	15.0
2482	Guscio	2170	2171	2216	2215	1	15.0
2483	Guscio	2171	2172	2217	2216	1	15.0
2484	Guscio	2172	2173	2218	2217	1	15.0
2485	Guscio	2173	2174	2219	2218	1	15.0
2486	Guscio	2174	2175	2220	2219	1	15.0
2487	Guscio	2175	2176	2221	2220	1	15.0
2488	Guscio	2176	2177	2222	2221	1	15.0
2489	Guscio	2177	2178	2223	2222	1	15.0
2490	Guscio	2178	2179	2224	2223	1	15.0
2491	Guscio	2179	2180	2225	2224	1	15.0
2492	Guscio	2180	2181	2226	2225	1	15.0
2493	Guscio	2181	2182	2227	2226	1	15.0
2494	Guscio	2182	2183	2228	2227	1	15.0
2495	Guscio	2183	2184	2229	2228	1	15.0
2496	Guscio	2184	2185	2230	2229	1	15.0
2497	Guscio	2185	2186	2231	2230	1	15.0
2498	Guscio	2186	2187	2232	2231	1	15.0
2499	Guscio	2187	2188	2233	2232	1	15.0
2500	Guscio	2188	2189	2234	2233	1	15.0
2501	Guscio	2189	2190	2235	2234	1	15.0
2502	Guscio	2190	2191	2236	2235	1	15.0
2503	Guscio	2191	2192	2237	2236	1	15.0
2504	Guscio	2192	2193	2238	2237	1	15.0
2505	Guscio	2193	2194	2239	2238	1	15.0
2506	Guscio	2194	2195	2240	2239	1	15.0
2507	Guscio	2195	2196	2241	2240	1	15.0
2508	Guscio	2196	2197	2242	2241	1	15.0
2509	Guscio	2197	2198	2243	2242	1	15.0
2510	Guscio	2198	2199	2244	2243	1	15.0
2511	Guscio	2199	2200	2245	2244	1	15.0
2512	Guscio	2200	2201	2246	2245	1	15.0
2513	Guscio	2202	2203	2248	2247	1	15.0
2514	Guscio	2203	2204	2249	2248	1	15.0
2515	Guscio	2204	2205	2250	2249	1	15.0
2516	Guscio	2205	2206	2251	2250	1	15.0
2517	Guscio	2206	2207	2252	2251	1	15.0
2518	Guscio	2207	2208	2253	2252	1	15.0
2519	Guscio	2208	2209	2254	2253	1	15.0
2520	Guscio	2209	2210	2255	2254	1	15.0
2521	Guscio	2210	2211	2256	2255	1	15.0
2522	Guscio	2211	2212	2257	2256	1	15.0
2523	Guscio	2212	2213	2258	2257	1	15.0
2524	Guscio	2213	2214	2259	2258	1	15.0
2525	Guscio	2214	2215	2260	2259	1	15.0
2526	Guscio	2215	2216	2261	2260	1	15.0
2527	Guscio	2216	2217	2262	2261	1	15.0
2528	Guscio	2217	2218	2263	2262	1	15.0
2529	Guscio	2218	2219	2264	2263	1	15.0
2530	Guscio	2219	2220	2265	2264	1	15.0

2531	Guscio	2220	2221	2266	2265	1	15.0
2532	Guscio	2221	2222	2267	2266	1	15.0
2533	Guscio	2222	2223	2268	2267	1	15.0
2534	Guscio	2223	2224	2269	2268	1	15.0
2535	Guscio	2224	2225	2270	2269	1	15.0
2536	Guscio	2225	2226	2271	2270	1	15.0
2537	Guscio	2226	2227	2272	2271	1	15.0
2538	Guscio	2227	2228	2273	2272	1	15.0
2539	Guscio	2228	2229	2274	2273	1	15.0
2540	Guscio	2229	2230	2275	2274	1	15.0
2541	Guscio	2230	2231	2276	2275	1	15.0
2542	Guscio	2231	2232	2277	2276	1	15.0
2543	Guscio	2232	2233	2278	2277	1	15.0
2544	Guscio	2233	2234	2279	2278	1	15.0
2545	Guscio	2234	2235	2280	2279	1	15.0
2546	Guscio	2235	2236	2281	2280	1	15.0
2547	Guscio	2236	2237	2282	2281	1	15.0
2548	Guscio	2237	2238	2283	2282	1	15.0
2549	Guscio	2238	2239	2284	2283	1	15.0
2550	Guscio	2239	2240	2285	2284	1	15.0
2551	Guscio	2240	2241	2286	2285	1	15.0
2552	Guscio	2241	2242	2287	2286	1	15.0
2553	Guscio	2242	2243	2288	2287	1	15.0
2554	Guscio	2243	2244	2289	2288	1	15.0
2555	Guscio	2244	2245	2290	2289	1	15.0
2556	Guscio	2245	2246	2291	2290	1	15.0
2557	Guscio	2247	2248	2293	2292	1	15.0
2558	Guscio	2248	2249	2294	2293	1	15.0
2559	Guscio	2249	2250	2295	2294	1	15.0
2560	Guscio	2250	2251	2296	2295	1	15.0
2561	Guscio	2251	2252	2297	2296	1	15.0
2562	Guscio	2252	2253	2298	2297	1	15.0
2563	Guscio	2253	2254	2299	2298	1	15.0
2564	Guscio	2254	2255	2300	2299	1	15.0
2565	Guscio	2255	2256	2301	2300	1	15.0
2566	Guscio	2256	2257	2302	2301	1	15.0
2567	Guscio	2257	2258	2303	2302	1	15.0
2568	Guscio	2258	2259	2304	2303	1	15.0
2569	Guscio	2259	2260	2305	2304	1	15.0
2570	Guscio	2260	2261	2306	2305	1	15.0
2571	Guscio	2261	2262	2307	2306	1	15.0
2572	Guscio	2262	2263	2308	2307	1	15.0
2573	Guscio	2263	2264	2309	2308	1	15.0
2574	Guscio	2264	2265	2310	2309	1	15.0
2575	Guscio	2265	2266	2311	2310	1	15.0
2576	Guscio	2266	2267	2312	2311	1	15.0
2577	Guscio	2267	2268	2313	2312	1	15.0
2578	Guscio	2268	2269	2314	2313	1	15.0
2579	Guscio	2269	2270	2315	2314	1	15.0
2580	Guscio	2270	2271	2316	2315	1	15.0
2581	Guscio	2271	2272	2317	2316	1	15.0
2582	Guscio	2272	2273	2318	2317	1	15.0
2583	Guscio	2273	2274	2319	2318	1	15.0
2584	Guscio	2274	2275	2320	2319	1	15.0
2585	Guscio	2275	2276	2321	2320	1	15.0
2586	Guscio	2276	2277	2322	2321	1	15.0
2587	Guscio	2277	2278	2323	2322	1	15.0
2588	Guscio	2278	2279	2324	2323	1	15.0
2589	Guscio	2279	2280	2325	2324	1	15.0
2590	Guscio	2280	2281	2326	2325	1	15.0
2591	Guscio	2281	2282	2327	2326	1	15.0
2592	Guscio	2282	2283	2328	2327	1	15.0
2593	Guscio	2283	2284	2329	2328	1	15.0
2594	Guscio	2284	2285	2330	2329	1	15.0
2595	Guscio	2285	2286	2331	2330	1	15.0
2596	Guscio	2286	2287	2332	2331	1	15.0
2597	Guscio	2287	2288	2333	2332	1	15.0
2598	Guscio	2288	2289	2334	2333	1	15.0
2599	Guscio	2289	2290	2335	2334	1	15.0
2600	Guscio	2290	2291	2336	2335	1	15.0
2601	Guscio	2292	2293	2338	2337	1	15.0
2602	Guscio	2293	2294	2339	2338	1	15.0
2603	Guscio	2294	2295	2340	2339	1	15.0
2604	Guscio	2295	2296	2341	2340	1	15.0
2605	Guscio	2296	2297	2342	2341	1	15.0
2606	Guscio	2297	2298	2343	2342	1	15.0
2607	Guscio	2298	2299	2344	2343	1	15.0
2608	Guscio	2299	2300	2345	2344	1	15.0

2609	Guscio	2300	2301	2346	2345	1	15.0
2610	Guscio	2301	2302	2347	2346	1	15.0
2611	Guscio	2302	2303	2348	2347	1	15.0
2612	Guscio	2303	2304	2349	2348	1	15.0
2613	Guscio	2304	2305	2350	2349	1	15.0
2614	Guscio	2305	2306	2351	2350	1	15.0
2615	Guscio	2306	2307	2352	2351	1	15.0
2616	Guscio	2307	2308	2353	2352	1	15.0
2617	Guscio	2308	2309	2354	2353	1	15.0
2618	Guscio	2309	2310	2355	2354	1	15.0
2619	Guscio	2310	2311	2356	2355	1	15.0
2620	Guscio	2311	2312	2357	2356	1	15.0
2621	Guscio	2312	2313	2358	2357	1	15.0
2622	Guscio	2313	2314	2359	2358	1	15.0
2623	Guscio	2314	2315	2360	2359	1	15.0
2624	Guscio	2315	2316	2361	2360	1	15.0
2625	Guscio	2316	2317	2362	2361	1	15.0
2626	Guscio	2317	2318	2363	2362	1	15.0
2627	Guscio	2318	2319	2364	2363	1	15.0
2628	Guscio	2319	2320	2365	2364	1	15.0
2629	Guscio	2320	2321	2366	2365	1	15.0
2630	Guscio	2321	2322	2367	2366	1	15.0
2631	Guscio	2322	2323	2368	2367	1	15.0
2632	Guscio	2323	2324	2369	2368	1	15.0
2633	Guscio	2324	2325	2370	2369	1	15.0
2634	Guscio	2325	2326	2371	2370	1	15.0
2635	Guscio	2326	2327	2372	2371	1	15.0
2636	Guscio	2327	2328	2373	2372	1	15.0
2637	Guscio	2328	2329	2374	2373	1	15.0
2638	Guscio	2329	2330	2375	2374	1	15.0
2639	Guscio	2330	2331	2376	2375	1	15.0
2640	Guscio	2331	2332	2377	2376	1	15.0
2641	Guscio	2332	2333	2378	2377	1	15.0
2642	Guscio	2333	2334	2379	2378	1	15.0
2643	Guscio	2334	2335	2380	2379	1	15.0
2644	Guscio	2335	2336	2381	2380	1	15.0
2645	Guscio	2337	2338	2383	2382	1	15.0
2646	Guscio	2338	2339	2384	2383	1	15.0
2647	Guscio	2339	2340	2385	2384	1	15.0
2648	Guscio	2340	2341	2386	2385	1	15.0
2649	Guscio	2341	2342	2387	2386	1	15.0
2650	Guscio	2342	2343	2388	2387	1	15.0
2651	Guscio	2343	2344	2389	2388	1	15.0
2652	Guscio	2344	2345	2390	2389	1	15.0
2653	Guscio	2345	2346	2391	2390	1	15.0
2654	Guscio	2346	2347	2392	2391	1	15.0
2655	Guscio	2347	2348	2393	2392	1	15.0
2656	Guscio	2348	2349	2394	2393	1	15.0
2657	Guscio	2349	2350	2395	2394	1	15.0
2658	Guscio	2350	2351	2396	2395	1	15.0
2659	Guscio	2351	2352	2397	2396	1	15.0
2660	Guscio	2352	2353	2398	2397	1	15.0
2661	Guscio	2353	2354	2399	2398	1	15.0
2662	Guscio	2354	2355	2400	2399	1	15.0
2663	Guscio	2355	2356	2401	2400	1	15.0
2664	Guscio	2356	2357	2402	2401	1	15.0
2665	Guscio	2357	2358	2403	2402	1	15.0
2666	Guscio	2358	2359	2404	2403	1	15.0
2667	Guscio	2359	2360	2405	2404	1	15.0
2668	Guscio	2360	2361	2406	2405	1	15.0
2669	Guscio	2361	2362	2407	2406	1	15.0
2670	Guscio	2362	2363	2408	2407	1	15.0
2671	Guscio	2363	2364	2409	2408	1	15.0
2672	Guscio	2364	2365	2410	2409	1	15.0
2673	Guscio	2365	2366	2411	2410	1	15.0
2674	Guscio	2366	2367	2412	2411	1	15.0
2675	Guscio	2367	2368	2413	2412	1	15.0
2676	Guscio	2368	2369	2414	2413	1	15.0
2677	Guscio	2369	2370	2415	2414	1	15.0
2678	Guscio	2370	2371	2416	2415	1	15.0
2679	Guscio	2371	2372	2417	2416	1	15.0
2680	Guscio	2372	2373	2418	2417	1	15.0
2681	Guscio	2373	2374	2419	2418	1	15.0
2682	Guscio	2374	2375	2420	2419	1	15.0
2683	Guscio	2375	2376	2421	2420	1	15.0
2684	Guscio	2376	2377	2422	2421	1	15.0
2685	Guscio	2377	2378	2423	2422	1	15.0
2686	Guscio	2378	2379	2424	2423	1	15.0

2687	Guscio	2379	2380	2425	2424	1	15.0
2688	Guscio	2380	2381	2426	2425	1	15.0
2689	Setto	2152	2157	2437	2432	1	15.0
2690	Setto	2153	2167	2442	2433	1	15.0
2691	Setto	2154	2179	2448	2434	1	15.0
2692	Setto	2155	2191	2454	2435	1	15.0
2693	Setto	2156	2201	2459	2436	1	15.0
2694	Setto	2157	2202	2460	2437	1	15.0
2695	Setto	2159	2204	2461	2438	1	15.0
2696	Setto	2161	2206	2462	2439	1	15.0
2697	Setto	2163	2208	2463	2440	1	15.0
2698	Setto	2165	2210	2464	2441	1	15.0
2699	Setto	2167	2212	2465	2442	1	15.0
2700	Setto	2169	2214	2466	2443	1	15.0
2701	Setto	2171	2216	2467	2444	1	15.0
2702	Setto	2173	2218	2468	2445	1	15.0
2703	Setto	2175	2220	2469	2446	1	15.0
2704	Setto	2177	2222	2470	2447	1	15.0
2705	Setto	2179	2224	2471	2448	1	15.0
2706	Setto	2181	2226	2472	2449	1	15.0
2707	Setto	2183	2228	2473	2450	1	15.0
2708	Setto	2185	2230	2474	2451	1	15.0
2709	Setto	2187	2232	2475	2452	1	15.0
2710	Setto	2189	2234	2476	2453	1	15.0
2711	Setto	2191	2236	2477	2454	1	15.0
2712	Setto	2193	2238	2478	2455	1	15.0
2713	Setto	2195	2240	2479	2456	1	15.0
2714	Setto	2197	2242	2480	2457	1	15.0
2715	Setto	2199	2244	2481	2458	1	15.0
2716	Setto	2201	2246	2482	2459	1	15.0
2717	Setto	2202	2247	2483	2460	1	15.0
2718	Setto	2204	2249	2484	2461	1	15.0
2719	Setto	2206	2251	2485	2462	1	15.0
2720	Setto	2208	2253	2486	2463	1	15.0
2721	Setto	2210	2255	2487	2464	1	15.0
2722	Setto	2212	2257	2488	2465	1	15.0
2723	Setto	2214	2259	2489	2466	1	15.0
2724	Setto	2216	2261	2490	2467	1	15.0
2725	Setto	2218	2263	2491	2468	1	15.0
2726	Setto	2220	2265	2492	2469	1	15.0
2727	Setto	2222	2267	2493	2470	1	15.0
2728	Setto	2224	2269	2494	2471	1	15.0
2729	Setto	2226	2271	2495	2472	1	15.0
2730	Setto	2228	2273	2496	2473	1	15.0
2731	Setto	2230	2275	2497	2474	1	15.0
2732	Setto	2232	2277	2498	2475	1	15.0
2733	Setto	2234	2279	2499	2476	1	15.0
2734	Setto	2236	2281	2500	2477	1	15.0
2735	Setto	2238	2283	2501	2478	1	15.0
2736	Setto	2240	2285	2502	2479	1	15.0
2737	Setto	2242	2287	2503	2480	1	15.0
2738	Setto	2244	2289	2504	2481	1	15.0
2739	Setto	2246	2291	2505	2482	1	15.0
2740	Setto	2247	2292	2506	2483	1	15.0
2741	Setto	2249	2294	2507	2484	1	15.0
2742	Setto	2251	2296	2508	2485	1	15.0
2743	Setto	2253	2298	2509	2486	1	15.0
2744	Setto	2255	2300	2510	2487	1	15.0
2745	Setto	2257	2302	2511	2488	1	15.0
2746	Setto	2259	2304	2512	2489	1	15.0
2747	Setto	2261	2306	2513	2490	1	15.0
2748	Setto	2263	2308	2514	2491	1	15.0
2749	Setto	2265	2310	2515	2492	1	15.0
2750	Setto	2267	2312	2516	2493	1	15.0
2751	Setto	2269	2314	2517	2494	1	15.0
2752	Setto	2271	2316	2518	2495	1	15.0
2753	Setto	2273	2318	2519	2496	1	15.0
2754	Setto	2275	2320	2520	2497	1	15.0
2755	Setto	2277	2322	2521	2498	1	15.0
2756	Setto	2279	2324	2522	2499	1	15.0
2757	Setto	2281	2326	2523	2500	1	15.0
2758	Setto	2283	2328	2524	2501	1	15.0
2759	Setto	2285	2330	2525	2502	1	15.0
2760	Setto	2287	2332	2526	2503	1	15.0
2761	Setto	2289	2334	2527	2504	1	15.0
2762	Setto	2291	2336	2528	2505	1	15.0
2763	Setto	2292	2337	2529	2506	1	15.0
2764	Setto	2294	2339	2530	2507	1	15.0

2765	Setto	2296	2341	2531	2508	1	15.0
2766	Setto	2298	2343	2532	2509	1	15.0
2767	Setto	2300	2345	2533	2510	1	15.0
2768	Setto	2302	2347	2534	2511	1	15.0
2769	Setto	2304	2349	2535	2512	1	15.0
2770	Setto	2306	2351	2536	2513	1	15.0
2771	Setto	2308	2353	2537	2514	1	15.0
2772	Setto	2310	2355	2538	2515	1	15.0
2773	Setto	2312	2357	2539	2516	1	15.0
2774	Setto	2314	2359	2540	2517	1	15.0
2775	Setto	2316	2361	2541	2518	1	15.0
2776	Setto	2318	2363	2542	2519	1	15.0
2777	Setto	2320	2365	2543	2520	1	15.0
2778	Setto	2322	2367	2544	2521	1	15.0
2779	Setto	2324	2369	2545	2522	1	15.0
2780	Setto	2326	2371	2546	2523	1	15.0
2781	Setto	2328	2373	2547	2524	1	15.0
2782	Setto	2330	2375	2548	2525	1	15.0
2783	Setto	2332	2377	2549	2526	1	15.0
2784	Setto	2334	2379	2550	2527	1	15.0
2785	Setto	2336	2381	2551	2528	1	15.0
2786	Setto	2337	2382	2552	2529	1	15.0
2787	Setto	2339	2384	2554	2530	1	15.0
2788	Setto	2341	2386	2556	2531	1	15.0
2789	Setto	2343	2388	2558	2532	1	15.0
2790	Setto	2345	2390	2560	2533	1	15.0
2791	Setto	2347	2392	2562	2534	1	15.0
2792	Setto	2349	2394	2564	2535	1	15.0
2793	Setto	2351	2396	2566	2536	1	15.0
2794	Setto	2353	2398	2568	2537	1	15.0
2795	Setto	2355	2400	2570	2538	1	15.0
2796	Setto	2357	2402	2572	2539	1	15.0
2797	Setto	2359	2404	2574	2540	1	15.0
2798	Setto	2361	2406	2576	2541	1	15.0
2799	Setto	2363	2408	2578	2542	1	15.0
2800	Setto	2365	2410	2580	2543	1	15.0
2801	Setto	2367	2412	2582	2544	1	15.0
2802	Setto	2369	2414	2584	2545	1	15.0
2803	Setto	2371	2416	2586	2546	1	15.0
2804	Setto	2373	2418	2588	2547	1	15.0
2805	Setto	2375	2420	2590	2548	1	15.0
2806	Setto	2377	2422	2592	2549	1	15.0
2807	Setto	2379	2424	2594	2550	1	15.0
2808	Setto	2381	2426	2596	2551	1	15.0
2809	Setto	2552	2553	2383	2382	1	15.0
2810	Setto	2553	2554	2384	2383	1	15.0
2811	Setto	2554	2555	2385	2384	1	15.0
2812	Setto	2555	2556	2386	2385	1	15.0
2813	Setto	2556	2557	2387	2386	1	15.0
2814	Setto	2557	2558	2388	2387	1	15.0
2815	Setto	2558	2559	2389	2388	1	15.0
2816	Setto	2559	2560	2390	2389	1	15.0
2817	Setto	2560	2561	2391	2390	1	15.0
2818	Setto	2561	2562	2392	2391	1	15.0
2819	Setto	2562	2563	2393	2392	1	15.0
2820	Setto	2563	2564	2394	2393	1	15.0
2821	Setto	2564	2565	2395	2394	1	15.0
2822	Setto	2565	2566	2396	2395	1	15.0
2823	Setto	2566	2567	2397	2396	1	15.0
2824	Setto	2567	2568	2398	2397	1	15.0
2825	Setto	2568	2569	2399	2398	1	15.0
2826	Setto	2569	2570	2400	2399	1	15.0
2827	Setto	2570	2571	2401	2400	1	15.0
2828	Setto	2571	2572	2402	2401	1	15.0
2829	Setto	2572	2573	2403	2402	1	15.0
2830	Setto	2573	2574	2404	2403	1	15.0
2831	Setto	2574	2575	2405	2404	1	15.0
2832	Setto	2575	2576	2406	2405	1	15.0
2833	Setto	2576	2577	2407	2406	1	15.0
2834	Setto	2577	2578	2408	2407	1	15.0
2835	Setto	2578	2579	2409	2408	1	15.0
2836	Setto	2579	2580	2410	2409	1	15.0
2837	Setto	2580	2581	2411	2410	1	15.0
2838	Setto	2581	2582	2412	2411	1	15.0
2839	Setto	2582	2583	2413	2412	1	15.0
2840	Setto	2583	2584	2414	2413	1	15.0
2841	Setto	2584	2585	2415	2414	1	15.0
2842	Setto	2585	2586	2416	2415	1	15.0

2843	Setto	2586	2587	2417	2416	1	15.0
2844	Setto	2587	2588	2418	2417	1	15.0
2845	Setto	2588	2589	2419	2418	1	15.0
2846	Setto	2589	2590	2420	2419	1	15.0
2847	Setto	2590	2591	2421	2420	1	15.0
2848	Setto	2591	2592	2422	2421	1	15.0
2849	Setto	2592	2593	2423	2422	1	15.0
2850	Setto	2593	2594	2424	2423	1	15.0
2851	Setto	2594	2595	2425	2424	1	15.0
2852	Setto	2595	2596	2426	2425	1	15.0
2853	Setto	2432	2437	2755	2750	1	15.0
2854	Setto	2433	2442	2760	2751	1	15.0
2855	Setto	2434	2448	2766	2752	1	15.0
2856	Setto	2435	2454	2772	2753	1	15.0
2857	Setto	2436	2459	2777	2754	1	15.0
2858	Setto	2437	2460	2778	2755	1	15.0
2859	Setto	2438	2461	2779	2756	1	15.0
2860	Setto	2439	2462	2780	2757	1	15.0
2861	Setto	2440	2463	2781	2758	1	15.0
2862	Setto	2441	2464	2782	2759	1	15.0
2863	Setto	2442	2465	2783	2760	1	15.0
2864	Setto	2443	2466	2784	2761	1	15.0
2865	Setto	2444	2467	2785	2762	1	15.0
2866	Setto	2445	2468	2786	2763	1	15.0
2867	Setto	2446	2469	2787	2764	1	15.0
2868	Setto	2447	2470	2788	2765	1	15.0
2869	Setto	2448	2471	2789	2766	1	15.0
2870	Setto	2449	2472	2790	2767	1	15.0
2871	Setto	2450	2473	2791	2768	1	15.0
2872	Setto	2451	2474	2792	2769	1	15.0
2873	Setto	2452	2475	2793	2770	1	15.0
2874	Setto	2453	2476	2794	2771	1	15.0
2875	Setto	2454	2477	2795	2772	1	15.0
2876	Setto	2455	2478	2796	2773	1	15.0
2877	Setto	2456	2479	2797	2774	1	15.0
2878	Setto	2457	2480	2798	2775	1	15.0
2879	Setto	2458	2481	2799	2776	1	15.0
2880	Setto	2459	2482	2800	2777	1	15.0
2881	Setto	2460	2483	2801	2778	1	15.0
2882	Setto	2461	2484	2802	2779	1	15.0
2883	Setto	2462	2485	2803	2780	1	15.0
2884	Setto	2463	2486	2804	2781	1	15.0
2885	Setto	2464	2487	2805	2782	1	15.0
2886	Setto	2465	2488	2806	2783	1	15.0
2887	Setto	2466	2489	2807	2784	1	15.0
2888	Setto	2467	2490	2808	2785	1	15.0
2889	Setto	2468	2491	2809	2786	1	15.0
2890	Setto	2469	2492	2810	2787	1	15.0
2891	Setto	2470	2493	2811	2788	1	15.0
2892	Setto	2471	2494	2812	2789	1	15.0
2893	Setto	2472	2495	2813	2790	1	15.0
2894	Setto	2473	2496	2814	2791	1	15.0
2895	Setto	2474	2497	2815	2792	1	15.0
2896	Setto	2475	2498	2816	2793	1	15.0
2897	Setto	2476	2499	2817	2794	1	15.0
2898	Setto	2477	2500	2818	2795	1	15.0
2899	Setto	2478	2501	2819	2796	1	15.0
2900	Setto	2479	2502	2820	2797	1	15.0
2901	Setto	2480	2503	2821	2798	1	15.0
2902	Setto	2481	2504	2822	2799	1	15.0
2903	Setto	2482	2505	2823	2800	1	15.0
2904	Setto	2483	2506	2824	2801	1	15.0
2905	Setto	2484	2507	2825	2802	1	15.0
2906	Setto	2485	2508	2826	2803	1	15.0
2907	Setto	2486	2509	2827	2804	1	15.0
2908	Setto	2487	2510	2828	2805	1	15.0
2909	Setto	2488	2511	2829	2806	1	15.0
2910	Setto	2489	2512	2830	2807	1	15.0
2911	Setto	2490	2513	2831	2808	1	15.0
2912	Setto	2491	2514	2832	2809	1	15.0
2913	Setto	2492	2515	2833	2810	1	15.0
2914	Setto	2493	2516	2834	2811	1	15.0
2915	Setto	2494	2517	2835	2812	1	15.0
2916	Setto	2495	2518	2836	2813	1	15.0
2917	Setto	2496	2519	2837	2814	1	15.0
2918	Setto	2497	2520	2838	2815	1	15.0
2919	Setto	2498	2521	2839	2816	1	15.0
2920	Setto	2499	2522	2840	2817	1	15.0

2921	Setto	2500	2523	2841	2818	1	15.0
2922	Setto	2501	2524	2842	2819	1	15.0
2923	Setto	2502	2525	2843	2820	1	15.0
2924	Setto	2503	2526	2844	2821	1	15.0
2925	Setto	2504	2527	2845	2822	1	15.0
2926	Setto	2505	2528	2846	2823	1	15.0
2927	Setto	2506	2529	2847	2824	1	15.0
2928	Setto	2507	2530	2848	2825	1	15.0
2929	Setto	2508	2531	2849	2826	1	15.0
2930	Setto	2509	2532	2850	2827	1	15.0
2931	Setto	2510	2533	2851	2828	1	15.0
2932	Setto	2511	2534	2852	2829	1	15.0
2933	Setto	2512	2535	2853	2830	1	15.0
2934	Setto	2513	2536	2854	2831	1	15.0
2935	Setto	2514	2537	2855	2832	1	15.0
2936	Setto	2515	2538	2856	2833	1	15.0
2937	Setto	2516	2539	2857	2834	1	15.0
2938	Setto	2517	2540	2858	2835	1	15.0
2939	Setto	2518	2541	2859	2836	1	15.0
2940	Setto	2519	2542	2860	2837	1	15.0
2941	Setto	2520	2543	2861	2838	1	15.0
2942	Setto	2521	2544	2862	2839	1	15.0
2943	Setto	2522	2545	2863	2840	1	15.0
2944	Setto	2523	2546	2864	2841	1	15.0
2945	Setto	2524	2547	2865	2842	1	15.0
2946	Setto	2525	2548	2866	2843	1	15.0
2947	Setto	2526	2549	2867	2844	1	15.0
2948	Setto	2527	2550	2868	2845	1	15.0
2949	Setto	2528	2551	2869	2846	1	15.0
2950	Setto	2529	2552	2870	2847	1	15.0
2951	Setto	2530	2554	2872	2848	1	15.0
2952	Setto	2531	2556	2874	2849	1	15.0
2953	Setto	2532	2558	2876	2850	1	15.0
2954	Setto	2533	2560	2878	2851	1	15.0
2955	Setto	2534	2562	2880	2852	1	15.0
2956	Setto	2535	2564	2882	2853	1	15.0
2957	Setto	2536	2566	2884	2854	1	15.0
2958	Setto	2537	2568	2886	2855	1	15.0
2959	Setto	2538	2570	2888	2856	1	15.0
2960	Setto	2539	2572	2890	2857	1	15.0
2961	Setto	2540	2574	2892	2858	1	15.0
2962	Setto	2541	2576	2894	2859	1	15.0
2963	Setto	2542	2578	2896	2860	1	15.0
2964	Setto	2543	2580	2898	2861	1	15.0
2965	Setto	2544	2582	2900	2862	1	15.0
2966	Setto	2545	2584	2902	2863	1	15.0
2967	Setto	2546	2586	2904	2864	1	15.0
2968	Setto	2547	2588	2906	2865	1	15.0
2969	Setto	2548	2590	2908	2866	1	15.0
2970	Setto	2549	2592	2910	2867	1	15.0
2971	Setto	2550	2594	2912	2868	1	15.0
2972	Setto	2551	2596	2914	2869	1	15.0
2973	Setto	2870	2871	2553	2552	1	15.0
2974	Setto	2871	2872	2554	2553	1	15.0
2975	Setto	2872	2873	2555	2554	1	15.0
2976	Setto	2873	2874	2556	2555	1	15.0
2977	Setto	2874	2875	2557	2556	1	15.0
2978	Setto	2875	2876	2558	2557	1	15.0
2979	Setto	2876	2877	2559	2558	1	15.0
2980	Setto	2877	2878	2560	2559	1	15.0
2981	Setto	2878	2879	2561	2560	1	15.0
2982	Setto	2879	2880	2562	2561	1	15.0
2983	Setto	2880	2881	2563	2562	1	15.0
2984	Setto	2881	2882	2564	2563	1	15.0
2985	Setto	2882	2883	2565	2564	1	15.0
2986	Setto	2883	2884	2566	2565	1	15.0
2987	Setto	2884	2885	2567	2566	1	15.0
2988	Setto	2885	2886	2568	2567	1	15.0
2989	Setto	2886	2887	2569	2568	1	15.0
2990	Setto	2887	2888	2570	2569	1	15.0
2991	Setto	2888	2889	2571	2570	1	15.0
2992	Setto	2889	2890	2572	2571	1	15.0
2993	Setto	2890	2891	2573	2572	1	15.0
2994	Setto	2891	2892	2574	2573	1	15.0
2995	Setto	2892	2893	2575	2574	1	15.0
2996	Setto	2893	2894	2576	2575	1	15.0
2997	Setto	2894	2895	2577	2576	1	15.0
2998	Setto	2895	2896	2578	2577	1	15.0

2999	Setto	2896	2897	2579	2578	1	15.0
3000	Setto	2897	2898	2580	2579	1	15.0
3001	Setto	2898	2899	2581	2580	1	15.0
3002	Setto	2899	2900	2582	2581	1	15.0
3003	Setto	2900	2901	2583	2582	1	15.0
3004	Setto	2901	2902	2584	2583	1	15.0
3005	Setto	2902	2903	2585	2584	1	15.0
3006	Setto	2903	2904	2586	2585	1	15.0
3007	Setto	2904	2905	2587	2586	1	15.0
3008	Setto	2905	2906	2588	2587	1	15.0
3009	Setto	2906	2907	2589	2588	1	15.0
3010	Setto	2907	2908	2590	2589	1	15.0
3011	Setto	2908	2909	2591	2590	1	15.0
3012	Setto	2909	2910	2592	2591	1	15.0
3013	Setto	2910	2911	2593	2592	1	15.0
3014	Setto	2911	2912	2594	2593	1	15.0
3015	Setto	2912	2913	2595	2594	1	15.0
3016	Setto	2913	2914	2596	2595	1	15.0
3017	Guscio	2609	2610	2657	2656	1	20.0
3018	Guscio	2610	2611	2658	2657	1	20.0
3019	Guscio	2611	2612	2659	2658	1	20.0
3020	Guscio	2612	2613	2660	2659	1	20.0
3021	Guscio	2613	2614	2661	2660	1	20.0
3022	Guscio	2614	2615	2662	2661	1	20.0
3023	Guscio	2615	2616	2663	2662	1	20.0
3024	Guscio	2616	2617	2664	2663	1	20.0
3025	Guscio	2617	2618	2665	2664	1	20.0
3026	Guscio	2618	2619	2666	2665	1	20.0
3027	Guscio	2619	2620	2667	2666	1	20.0
3028	Guscio	2620	2621	2668	2667	1	20.0
3029	Guscio	2621	2622	2669	2668	1	20.0
3030	Guscio	2622	2623	2670	2669	1	20.0
3031	Guscio	2623	2624	2671	2670	1	20.0
3032	Guscio	2624	2625	2672	2671	1	20.0
3033	Guscio	2625	2626	2673	2672	1	20.0
3034	Guscio	2626	2627	2674	2673	1	20.0
3035	Guscio	2627	2628	2675	2674	1	20.0
3036	Guscio	2628	2629	2676	2675	1	20.0
3037	Guscio	2629	2630	2677	2676	1	20.0
3038	Guscio	2630	2631	2678	2677	1	20.0
3039	Guscio	2631	2632	2679	2678	1	20.0
3040	Guscio	2632	2633	2680	2679	1	20.0
3041	Guscio	2633	2634	2681	2680	1	20.0
3042	Guscio	2634	2635	2682	2681	1	20.0
3043	Guscio	2635	2636	2683	2682	1	20.0
3044	Guscio	2636	2637	2684	2683	1	20.0
3045	Guscio	2637	2638	2685	2684	1	20.0
3046	Guscio	2638	2639	2686	2685	1	20.0
3047	Guscio	2639	2640	2687	2686	1	20.0
3048	Guscio	2640	2641	2688	2687	1	20.0
3049	Guscio	2641	2642	2689	2688	1	20.0
3050	Guscio	2642	2643	2690	2689	1	20.0
3051	Guscio	2643	2644	2691	2690	1	20.0
3052	Guscio	2644	2645	2692	2691	1	20.0
3053	Guscio	2645	2646	2693	2692	1	20.0
3054	Guscio	2646	2647	2694	2693	1	20.0
3055	Guscio	2647	2648	2695	2694	1	20.0
3056	Guscio	2648	2649	2696	2695	1	20.0
3057	Guscio	2649	2650	2697	2696	1	20.0
3058	Guscio	2650	2651	2698	2697	1	20.0
3059	Guscio	2651	2652	2699	2698	1	20.0
3060	Guscio	2652	2653	2700	2699	1	20.0
3061	Guscio	2653	2654	2701	2700	1	20.0
3062	Guscio	2654	2655	2702	2701	1	20.0
3063	Guscio	2656	2657	2704	2703	1	20.0
3064	Guscio	2657	2658	2705	2704	1	20.0
3065	Guscio	2658	2659	2706	2705	1	20.0
3066	Guscio	2659	2660	2707	2706	1	20.0
3067	Guscio	2660	2661	2708	2707	1	20.0
3068	Guscio	2661	2662	2709	2708	1	20.0
3069	Guscio	2662	2663	2710	2709	1	20.0
3070	Guscio	2663	2664	2711	2710	1	20.0
3071	Guscio	2664	2665	2712	2711	1	20.0
3072	Guscio	2665	2666	2713	2712	1	20.0
3073	Guscio	2666	2667	2714	2713	1	20.0
3074	Guscio	2667	2668	2715	2714	1	20.0
3075	Guscio	2668	2669	2716	2715	1	20.0
3076	Guscio	2669	2670	2717	2716	1	20.0

3077	Guscio	2670	2671	2718	2717	1	20.0
3078	Guscio	2671	2672	2719	2718	1	20.0
3079	Guscio	2672	2673	2720	2719	1	20.0
3080	Guscio	2673	2674	2721	2720	1	20.0
3081	Guscio	2674	2675	2722	2721	1	20.0
3082	Guscio	2675	2676	2723	2722	1	20.0
3083	Guscio	2676	2677	2724	2723	1	20.0
3084	Guscio	2677	2678	2725	2724	1	20.0
3085	Guscio	2678	2679	2726	2725	1	20.0
3086	Guscio	2679	2680	2727	2726	1	20.0
3087	Guscio	2680	2681	2728	2727	1	20.0
3088	Guscio	2681	2682	2729	2728	1	20.0
3089	Guscio	2682	2683	2730	2729	1	20.0
3090	Guscio	2683	2684	2731	2730	1	20.0
3091	Guscio	2684	2685	2732	2731	1	20.0
3092	Guscio	2685	2686	2733	2732	1	20.0
3093	Guscio	2686	2687	2734	2733	1	20.0
3094	Guscio	2687	2688	2735	2734	1	20.0
3095	Guscio	2688	2689	2736	2735	1	20.0
3096	Guscio	2689	2690	2737	2736	1	20.0
3097	Guscio	2690	2691	2738	2737	1	20.0
3098	Guscio	2691	2692	2739	2738	1	20.0
3099	Guscio	2692	2693	2740	2739	1	20.0
3100	Guscio	2693	2694	2741	2740	1	20.0
3101	Guscio	2694	2695	2742	2741	1	20.0
3102	Guscio	2695	2696	2743	2742	1	20.0
3103	Guscio	2696	2697	2744	2743	1	20.0
3104	Guscio	2697	2698	2745	2744	1	20.0
3105	Guscio	2698	2699	2746	2745	1	20.0
3106	Guscio	2699	2700	2747	2746	1	20.0
3107	Guscio	2700	2701	2748	2747	1	20.0
3108	Guscio	2701	2702	2749	2748	1	20.0
3109	Guscio	2703	2704	2916	2915	1	20.0
3110	Guscio	2704	2705	2917	2916	1	20.0
3111	Guscio	2705	2706	2918	2917	1	20.0
3112	Guscio	2706	2707	2919	2918	1	20.0
3113	Guscio	2707	2708	2920	2919	1	20.0
3114	Guscio	2708	2709	2921	2920	1	20.0
3115	Guscio	2709	2710	2922	2921	1	20.0
3116	Guscio	2710	2711	2923	2922	1	20.0
3117	Guscio	2711	2712	2924	2923	1	20.0
3118	Guscio	2712	2713	2925	2924	1	20.0
3119	Guscio	2713	2714	2926	2925	1	20.0
3120	Guscio	2714	2715	2927	2926	1	20.0
3121	Guscio	2715	2716	2928	2927	1	20.0
3122	Guscio	2716	2717	2929	2928	1	20.0
3123	Guscio	2717	2718	2930	2929	1	20.0
3124	Guscio	2718	2719	2931	2930	1	20.0
3125	Guscio	2719	2720	2932	2931	1	20.0
3126	Guscio	2720	2721	2933	2932	1	20.0
3127	Guscio	2721	2722	2934	2933	1	20.0
3128	Guscio	2722	2723	2935	2934	1	20.0
3129	Guscio	2723	2724	2936	2935	1	20.0
3130	Guscio	2724	2725	2937	2936	1	20.0
3131	Guscio	2725	2726	2938	2937	1	20.0
3132	Guscio	2726	2727	2939	2938	1	20.0
3133	Guscio	2727	2728	2940	2939	1	20.0
3134	Guscio	2728	2729	2941	2940	1	20.0
3135	Guscio	2729	2730	2942	2941	1	20.0
3136	Guscio	2730	2731	2943	2942	1	20.0
3137	Guscio	2731	2732	2944	2943	1	20.0
3138	Guscio	2732	2733	2945	2944	1	20.0
3139	Guscio	2733	2734	2946	2945	1	20.0
3140	Guscio	2734	2735	2947	2946	1	20.0
3141	Guscio	2735	2736	2948	2947	1	20.0
3142	Guscio	2736	2737	2949	2948	1	20.0
3143	Guscio	2737	2738	2950	2949	1	20.0
3144	Guscio	2738	2739	2951	2950	1	20.0
3145	Guscio	2739	2740	2952	2951	1	20.0
3146	Guscio	2740	2741	2953	2952	1	20.0
3147	Guscio	2741	2742	2954	2953	1	20.0
3148	Guscio	2742	2743	2955	2954	1	20.0
3149	Guscio	2743	2744	2956	2955	1	20.0
3150	Guscio	2744	2745	2957	2956	1	20.0
3151	Guscio	2745	2746	2958	2957	1	20.0
3152	Guscio	2746	2747	2959	2958	1	20.0
3153	Guscio	2747	2748	2960	2959	1	20.0
3154	Guscio	2748	2749	2961	2960	1	20.0

3155	Guscio	2915	2916	2963	2962	1	20.0
3156	Guscio	2916	2917	2964	2963	1	20.0
3157	Guscio	2917	2918	2965	2964	1	20.0
3158	Guscio	2918	2919	2966	2965	1	20.0
3159	Guscio	2919	2920	2967	2966	1	20.0
3160	Guscio	2920	2921	2968	2967	1	20.0
3161	Guscio	2921	2922	2969	2968	1	20.0
3162	Guscio	2922	2923	2970	2969	1	20.0
3163	Guscio	2923	2924	2971	2970	1	20.0
3164	Guscio	2924	2925	2972	2971	1	20.0
3165	Guscio	2925	2926	2973	2972	1	20.0
3166	Guscio	2926	2927	2974	2973	1	20.0
3167	Guscio	2927	2928	2975	2974	1	20.0
3168	Guscio	2928	2929	2976	2975	1	20.0
3169	Guscio	2929	2930	2977	2976	1	20.0
3170	Guscio	2930	2931	2978	2977	1	20.0
3171	Guscio	2931	2932	2979	2978	1	20.0
3172	Guscio	2932	2933	2980	2979	1	20.0
3173	Guscio	2933	2934	2981	2980	1	20.0
3174	Guscio	2934	2935	2982	2981	1	20.0
3175	Guscio	2935	2936	2983	2982	1	20.0
3176	Guscio	2936	2937	2984	2983	1	20.0
3177	Guscio	2937	2938	2985	2984	1	20.0
3178	Guscio	2938	2939	2986	2985	1	20.0
3179	Guscio	2939	2940	2987	2986	1	20.0
3180	Guscio	2940	2941	2988	2987	1	20.0
3181	Guscio	2941	2942	2989	2988	1	20.0
3182	Guscio	2942	2943	2990	2989	1	20.0
3183	Guscio	2943	2944	2991	2990	1	20.0
3184	Guscio	2944	2945	2992	2991	1	20.0
3185	Guscio	2945	2946	2993	2992	1	20.0
3186	Guscio	2946	2947	2994	2993	1	20.0
3187	Guscio	2947	2948	2995	2994	1	20.0
3188	Guscio	2948	2949	2996	2995	1	20.0
3189	Guscio	2949	2950	2997	2996	1	20.0
3190	Guscio	2950	2951	2998	2997	1	20.0
3191	Guscio	2951	2952	2999	2998	1	20.0
3192	Guscio	2952	2953	3000	2999	1	20.0
3193	Guscio	2953	2954	3001	3000	1	20.0
3194	Guscio	2954	2955	3002	3001	1	20.0
3195	Guscio	2955	2956	3003	3002	1	20.0
3196	Guscio	2956	2957	3004	3003	1	20.0
3197	Guscio	2957	2958	3005	3004	1	20.0
3198	Guscio	2958	2959	3006	3005	1	20.0
3199	Guscio	2959	2960	3007	3006	1	20.0
3200	Guscio	2960	2961	3008	3007	1	20.0
3201	Setto	2750	2755	3057	3010	1	15.0
3202	Setto	2751	2760	3067	3020	1	15.0
3203	Setto	2752	2766	3079	3032	1	15.0
3204	Setto	2753	2772	3091	3044	1	15.0
3205	Setto	2754	2777	3101	3054	1	15.0
3206	Setto	2755	2778	3104	3057	1	15.0
3207	Setto	2756	2779	3106	3059	1	15.0
3208	Setto	2757	2780	3108	3061	1	15.0
3209	Setto	2758	2781	3110	3063	1	15.0
3210	Setto	2759	2782	3112	3065	1	15.0
3211	Setto	2760	2783	3114	3067	1	15.0
3212	Setto	2761	2784	3116	3069	1	15.0
3213	Setto	2762	2785	3118	3071	1	15.0
3214	Setto	2763	2786	3120	3073	1	15.0
3215	Setto	2764	2787	3122	3075	1	15.0
3216	Setto	2765	2788	3124	3077	1	15.0
3217	Setto	2766	2789	3126	3079	1	15.0
3218	Setto	2767	2790	3128	3081	1	15.0
3219	Setto	2768	2791	3130	3083	1	15.0
3220	Setto	2769	2792	3132	3085	1	15.0
3221	Setto	2770	2793	3134	3087	1	15.0
3222	Setto	2771	2794	3136	3089	1	15.0
3223	Setto	2772	2795	3138	3091	1	15.0
3224	Setto	2773	2796	3140	3093	1	15.0
3225	Setto	2774	2797	3142	3095	1	15.0
3226	Setto	2775	2798	3144	3097	1	15.0
3227	Setto	2776	2799	3146	3099	1	15.0
3228	Setto	2777	2800	3148	3101	1	15.0
3229	Setto	2778	2801	3151	3104	1	15.0
3230	Setto	2779	2802	3153	3106	1	15.0
3231	Setto	2780	2803	3155	3108	1	15.0
3232	Setto	2781	2804	3157	3110	1	15.0

3233	Setto	2782	2805	3159	3112	1	15.0
3234	Setto	2783	2806	3161	3114	1	15.0
3235	Setto	2784	2807	3163	3116	1	15.0
3236	Setto	2785	2808	3165	3118	1	15.0
3237	Setto	2786	2809	3167	3120	1	15.0
3238	Setto	2787	2810	3169	3122	1	15.0
3239	Setto	2788	2811	3171	3124	1	15.0
3240	Setto	2789	2812	3173	3126	1	15.0
3241	Setto	2790	2813	3175	3128	1	15.0
3242	Setto	2791	2814	3177	3130	1	15.0
3243	Setto	2792	2815	3179	3132	1	15.0
3244	Setto	2793	2816	3181	3134	1	15.0
3245	Setto	2794	2817	3183	3136	1	15.0
3246	Setto	2795	2818	3185	3138	1	15.0
3247	Setto	2796	2819	3187	3140	1	15.0
3248	Setto	2797	2820	3189	3142	1	15.0
3249	Setto	2798	2821	3191	3144	1	15.0
3250	Setto	2799	2822	3193	3146	1	15.0
3251	Setto	2800	2823	3195	3148	1	15.0
3252	Guscio	2962	2963	3010	3009	1	20.0
3253	Guscio	2963	2964	3011	3010	1	20.0
3254	Guscio	2964	2965	3012	3011	1	20.0
3255	Guscio	2965	2966	3013	3012	1	20.0
3256	Guscio	2966	2967	3014	3013	1	20.0
3257	Guscio	2967	2968	3015	3014	1	20.0
3258	Guscio	2968	2969	3016	3015	1	20.0
3259	Guscio	2969	2970	3017	3016	1	20.0
3260	Guscio	2970	2971	3018	3017	1	20.0
3261	Guscio	2971	2972	3019	3018	1	20.0
3262	Guscio	2972	2973	3020	3019	1	20.0
3263	Guscio	2973	2974	3021	3020	1	20.0
3264	Guscio	2974	2975	3022	3021	1	20.0
3265	Guscio	2975	2976	3023	3022	1	20.0
3266	Guscio	2976	2977	3024	3023	1	20.0
3267	Guscio	2977	2978	3025	3024	1	20.0
3268	Guscio	2978	2979	3026	3025	1	20.0
3269	Guscio	2979	2980	3027	3026	1	20.0
3270	Guscio	2980	2981	3028	3027	1	20.0
3271	Guscio	2981	2982	3029	3028	1	20.0
3272	Guscio	2982	2983	3030	3029	1	20.0
3273	Guscio	2983	2984	3031	3030	1	20.0
3274	Guscio	2984	2985	3032	3031	1	20.0
3275	Guscio	2985	2986	3033	3032	1	20.0
3276	Guscio	2986	2987	3034	3033	1	20.0
3277	Guscio	2987	2988	3035	3034	1	20.0
3278	Guscio	2988	2989	3036	3035	1	20.0
3279	Guscio	2989	2990	3037	3036	1	20.0
3280	Guscio	2990	2991	3038	3037	1	20.0
3281	Guscio	2991	2992	3039	3038	1	20.0
3282	Guscio	2992	2993	3040	3039	1	20.0
3283	Guscio	2993	2994	3041	3040	1	20.0
3284	Guscio	2994	2995	3042	3041	1	20.0
3285	Guscio	2995	2996	3043	3042	1	20.0
3286	Guscio	2996	2997	3044	3043	1	20.0
3287	Guscio	2997	2998	3045	3044	1	20.0
3288	Guscio	2998	2999	3046	3045	1	20.0
3289	Guscio	2999	3000	3047	3046	1	20.0
3290	Guscio	3000	3001	3048	3047	1	20.0
3291	Guscio	3001	3002	3049	3048	1	20.0
3292	Guscio	3002	3003	3050	3049	1	20.0
3293	Guscio	3003	3004	3051	3050	1	20.0
3294	Guscio	3004	3005	3052	3051	1	20.0
3295	Guscio	3005	3006	3053	3052	1	20.0
3296	Guscio	3006	3007	3054	3053	1	20.0
3297	Guscio	3007	3008	3055	3054	1	20.0
3298	Setto	2801	2824	3198	3151	1	15.0
3299	Setto	2802	2825	3200	3153	1	15.0
3300	Setto	2803	2826	3202	3155	1	15.0
3301	Setto	2804	2827	3204	3157	1	15.0
3302	Setto	2805	2828	3206	3159	1	15.0
3303	Setto	2806	2829	3208	3161	1	15.0
3304	Setto	2807	2830	3210	3163	1	15.0
3305	Setto	2808	2831	3212	3165	1	15.0
3306	Setto	2809	2832	3214	3167	1	15.0
3307	Setto	2810	2833	3216	3169	1	15.0
3308	Setto	2811	2834	3218	3171	1	15.0
3309	Setto	2812	2835	3220	3173	1	15.0
3310	Setto	2813	2836	3222	3175	1	15.0

3311	Setto	2814	2837	3224	3177	1	15.0
3312	Setto	2815	2838	3226	3179	1	15.0
3313	Setto	2816	2839	3228	3181	1	15.0
3314	Setto	2817	2840	3230	3183	1	15.0
3315	Setto	2818	2841	3232	3185	1	15.0
3316	Setto	2819	2842	3234	3187	1	15.0
3317	Setto	2820	2843	3236	3189	1	15.0
3318	Setto	2821	2844	3238	3191	1	15.0
3319	Setto	2822	2845	3240	3193	1	15.0
3320	Setto	2823	2846	3242	3195	1	15.0
3321	Guscio	3009	3010	3057	3056	1	20.0
3322	Guscio	3010	3011	3058	3057	1	20.0
3323	Guscio	3011	3012	3059	3058	1	20.0
3324	Guscio	3012	3013	3060	3059	1	20.0
3325	Guscio	3013	3014	3061	3060	1	20.0
3326	Guscio	3014	3015	3062	3061	1	20.0
3327	Guscio	3015	3016	3063	3062	1	20.0
3328	Guscio	3016	3017	3064	3063	1	20.0
3329	Guscio	3017	3018	3065	3064	1	20.0
3330	Guscio	3018	3019	3066	3065	1	20.0
3331	Guscio	3019	3020	3067	3066	1	20.0
3332	Guscio	3020	3021	3068	3067	1	20.0
3333	Guscio	3021	3022	3069	3068	1	20.0
3334	Guscio	3022	3023	3070	3069	1	20.0
3335	Guscio	3023	3024	3071	3070	1	20.0
3336	Guscio	3024	3025	3072	3071	1	20.0
3337	Guscio	3025	3026	3073	3072	1	20.0
3338	Guscio	3026	3027	3074	3073	1	20.0
3339	Guscio	3027	3028	3075	3074	1	20.0
3340	Guscio	3028	3029	3076	3075	1	20.0
3341	Guscio	3029	3030	3077	3076	1	20.0
3342	Guscio	3030	3031	3078	3077	1	20.0
3343	Guscio	3031	3032	3079	3078	1	20.0
3344	Guscio	3032	3033	3080	3079	1	20.0
3345	Guscio	3033	3034	3081	3080	1	20.0
3346	Guscio	3034	3035	3082	3081	1	20.0
3347	Guscio	3035	3036	3083	3082	1	20.0
3348	Guscio	3036	3037	3084	3083	1	20.0
3349	Guscio	3037	3038	3085	3084	1	20.0
3350	Guscio	3038	3039	3086	3085	1	20.0
3351	Guscio	3039	3040	3087	3086	1	20.0
3352	Guscio	3040	3041	3088	3087	1	20.0
3353	Guscio	3041	3042	3089	3088	1	20.0
3354	Guscio	3042	3043	3090	3089	1	20.0
3355	Guscio	3043	3044	3091	3090	1	20.0
3356	Guscio	3044	3045	3092	3091	1	20.0
3357	Guscio	3045	3046	3093	3092	1	20.0
3358	Guscio	3046	3047	3094	3093	1	20.0
3359	Guscio	3047	3048	3095	3094	1	20.0
3360	Guscio	3048	3049	3096	3095	1	20.0
3361	Guscio	3049	3050	3097	3096	1	20.0
3362	Guscio	3050	3051	3098	3097	1	20.0
3363	Guscio	3051	3052	3099	3098	1	20.0
3364	Guscio	3052	3053	3100	3099	1	20.0
3365	Guscio	3053	3054	3101	3100	1	20.0
3366	Guscio	3054	3055	3102	3101	1	20.0
3367	Setto	2824	2847	3245	3198	1	15.0
3368	Setto	2825	2848	3247	3200	1	15.0
3369	Setto	2826	2849	3249	3202	1	15.0
3370	Setto	2827	2850	3251	3204	1	15.0
3371	Setto	2828	2851	3253	3206	1	15.0
3372	Setto	2829	2852	3255	3208	1	15.0
3373	Setto	2830	2853	3257	3210	1	15.0
3374	Setto	2831	2854	3259	3212	1	15.0
3375	Setto	2832	2855	3261	3214	1	15.0
3376	Setto	2833	2856	3263	3216	1	15.0
3377	Setto	2834	2857	3265	3218	1	15.0
3378	Setto	2835	2858	3267	3220	1	15.0
3379	Setto	2836	2859	3269	3222	1	15.0
3380	Setto	2837	2860	3271	3224	1	15.0
3381	Setto	2838	2861	3273	3226	1	15.0
3382	Setto	2839	2862	3275	3228	1	15.0
3383	Setto	2840	2863	3277	3230	1	15.0
3384	Setto	2841	2864	3279	3232	1	15.0
3385	Setto	2842	2865	3281	3234	1	15.0
3386	Setto	2843	2866	3283	3236	1	15.0
3387	Setto	2844	2867	3285	3238	1	15.0
3388	Setto	2845	2868	3287	3240	1	15.0

3389	Setto	2846	2869	3289	3242	1	15.0
3390	Guscio	3056	3057	3104	3103	1	20.0
3391	Guscio	3057	3058	3105	3104	1	20.0
3392	Guscio	3058	3059	3106	3105	1	20.0
3393	Guscio	3059	3060	3107	3106	1	20.0
3394	Guscio	3060	3061	3108	3107	1	20.0
3395	Guscio	3061	3062	3109	3108	1	20.0
3396	Guscio	3062	3063	3110	3109	1	20.0
3397	Guscio	3063	3064	3111	3110	1	20.0
3398	Guscio	3064	3065	3112	3111	1	20.0
3399	Guscio	3065	3066	3113	3112	1	20.0
3400	Guscio	3066	3067	3114	3113	1	20.0
3401	Guscio	3067	3068	3115	3114	1	20.0
3402	Guscio	3068	3069	3116	3115	1	20.0
3403	Guscio	3069	3070	3117	3116	1	20.0
3404	Guscio	3070	3071	3118	3117	1	20.0
3405	Guscio	3071	3072	3119	3118	1	20.0
3406	Guscio	3072	3073	3120	3119	1	20.0
3407	Guscio	3073	3074	3121	3120	1	20.0
3408	Guscio	3074	3075	3122	3121	1	20.0
3409	Guscio	3075	3076	3123	3122	1	20.0
3410	Guscio	3076	3077	3124	3123	1	20.0
3411	Guscio	3077	3078	3125	3124	1	20.0
3412	Guscio	3078	3079	3126	3125	1	20.0
3413	Guscio	3079	3080	3127	3126	1	20.0
3414	Guscio	3080	3081	3128	3127	1	20.0
3415	Guscio	3081	3082	3129	3128	1	20.0
3416	Guscio	3082	3083	3130	3129	1	20.0
3417	Guscio	3083	3084	3131	3130	1	20.0
3418	Guscio	3084	3085	3132	3131	1	20.0
3419	Guscio	3085	3086	3133	3132	1	20.0
3420	Guscio	3086	3087	3134	3133	1	20.0
3421	Guscio	3087	3088	3135	3134	1	20.0
3422	Guscio	3088	3089	3136	3135	1	20.0
3423	Guscio	3089	3090	3137	3136	1	20.0
3424	Guscio	3090	3091	3138	3137	1	20.0
3425	Guscio	3091	3092	3139	3138	1	20.0
3426	Guscio	3092	3093	3140	3139	1	20.0
3427	Guscio	3093	3094	3141	3140	1	20.0
3428	Guscio	3094	3095	3142	3141	1	20.0
3429	Guscio	3095	3096	3143	3142	1	20.0
3430	Guscio	3096	3097	3144	3143	1	20.0
3431	Guscio	3097	3098	3145	3144	1	20.0
3432	Guscio	3098	3099	3146	3145	1	20.0
3433	Guscio	3099	3100	3147	3146	1	20.0
3434	Guscio	3100	3101	3148	3147	1	20.0
3435	Guscio	3101	3102	3149	3148	1	20.0
3436	Setto	2847	2870	3292	3245	1	15.0
3437	Setto	2848	2872	3294	3247	1	15.0
3438	Setto	2849	2874	3296	3249	1	15.0
3439	Setto	2850	2876	3298	3251	1	15.0
3440	Setto	2851	2878	3300	3253	1	15.0
3441	Setto	2852	2880	3302	3255	1	15.0
3442	Setto	2853	2882	3304	3257	1	15.0
3443	Setto	2854	2884	3306	3259	1	15.0
3444	Setto	2855	2886	3308	3261	1	15.0
3445	Setto	2856	2888	3310	3263	1	15.0
3446	Setto	2857	2890	3312	3265	1	15.0
3447	Setto	2858	2892	3314	3267	1	15.0
3448	Setto	2859	2894	3316	3269	1	15.0
3449	Setto	2860	2896	3318	3271	1	15.0
3450	Setto	2861	2898	3320	3273	1	15.0
3451	Setto	2862	2900	3322	3275	1	15.0
3452	Setto	2863	2902	3324	3277	1	15.0
3453	Setto	2864	2904	3326	3279	1	15.0
3454	Setto	2865	2906	3328	3281	1	15.0
3455	Setto	2866	2908	3330	3283	1	15.0
3456	Setto	2867	2910	3332	3285	1	15.0
3457	Setto	2868	2912	3334	3287	1	15.0
3458	Setto	2869	2914	3336	3289	1	15.0
3459	Setto	3292	3293	2871	2870	1	15.0
3460	Setto	3293	3294	2872	2871	1	15.0
3461	Setto	3294	3295	2873	2872	1	15.0
3462	Setto	3295	3296	2874	2873	1	15.0
3463	Setto	3296	3297	2875	2874	1	15.0
3464	Setto	3297	3298	2876	2875	1	15.0
3465	Setto	3298	3299	2877	2876	1	15.0
3466	Setto	3299	3300	2878	2877	1	15.0

3467	Setto	3300	3301	2879	2878	1	15.0
3468	Setto	3301	3302	2880	2879	1	15.0
3469	Setto	3302	3303	2881	2880	1	15.0
3470	Setto	3303	3304	2882	2881	1	15.0
3471	Setto	3304	3305	2883	2882	1	15.0
3472	Setto	3305	3306	2884	2883	1	15.0
3473	Setto	3306	3307	2885	2884	1	15.0
3474	Setto	3307	3308	2886	2885	1	15.0
3475	Setto	3308	3309	2887	2886	1	15.0
3476	Setto	3309	3310	2888	2887	1	15.0
3477	Setto	3310	3311	2889	2888	1	15.0
3478	Setto	3311	3312	2890	2889	1	15.0
3479	Setto	3312	3313	2891	2890	1	15.0
3480	Setto	3313	3314	2892	2891	1	15.0
3481	Setto	3314	3315	2893	2892	1	15.0
3482	Setto	3315	3316	2894	2893	1	15.0
3483	Setto	3316	3317	2895	2894	1	15.0
3484	Setto	3317	3318	2896	2895	1	15.0
3485	Setto	3318	3319	2897	2896	1	15.0
3486	Setto	3319	3320	2898	2897	1	15.0
3487	Setto	3320	3321	2899	2898	1	15.0
3488	Setto	3321	3322	2900	2899	1	15.0
3489	Setto	3322	3323	2901	2900	1	15.0
3490	Setto	3323	3324	2902	2901	1	15.0
3491	Setto	3324	3325	2903	2902	1	15.0
3492	Setto	3325	3326	2904	2903	1	15.0
3493	Setto	3326	3327	2905	2904	1	15.0
3494	Setto	3327	3328	2906	2905	1	15.0
3495	Setto	3328	3329	2907	2906	1	15.0
3496	Setto	3329	3330	2908	2907	1	15.0
3497	Setto	3330	3331	2909	2908	1	15.0
3498	Setto	3331	3332	2910	2909	1	15.0
3499	Setto	3332	3333	2911	2910	1	15.0
3500	Setto	3333	3334	2912	2911	1	15.0
3501	Setto	3334	3335	2913	2912	1	15.0
3502	Setto	3335	3336	2914	2913	1	15.0
3503	Guscio	3103	3104	3151	3150	1	20.0
3504	Guscio	3104	3105	3152	3151	1	20.0
3505	Guscio	3105	3106	3153	3152	1	20.0
3506	Guscio	3106	3107	3154	3153	1	20.0
3507	Guscio	3107	3108	3155	3154	1	20.0
3508	Guscio	3108	3109	3156	3155	1	20.0
3509	Guscio	3109	3110	3157	3156	1	20.0
3510	Guscio	3110	3111	3158	3157	1	20.0
3511	Guscio	3111	3112	3159	3158	1	20.0
3512	Guscio	3112	3113	3160	3159	1	20.0
3513	Guscio	3113	3114	3161	3160	1	20.0
3514	Guscio	3114	3115	3162	3161	1	20.0
3515	Guscio	3115	3116	3163	3162	1	20.0
3516	Guscio	3116	3117	3164	3163	1	20.0
3517	Guscio	3117	3118	3165	3164	1	20.0
3518	Guscio	3118	3119	3166	3165	1	20.0
3519	Guscio	3119	3120	3167	3166	1	20.0
3520	Guscio	3120	3121	3168	3167	1	20.0
3521	Guscio	3121	3122	3169	3168	1	20.0
3522	Guscio	3122	3123	3170	3169	1	20.0
3523	Guscio	3123	3124	3171	3170	1	20.0
3524	Guscio	3124	3125	3172	3171	1	20.0
3525	Guscio	3125	3126	3173	3172	1	20.0
3526	Guscio	3126	3127	3174	3173	1	20.0
3527	Guscio	3127	3128	3175	3174	1	20.0
3528	Guscio	3128	3129	3176	3175	1	20.0
3529	Guscio	3129	3130	3177	3176	1	20.0
3530	Guscio	3130	3131	3178	3177	1	20.0
3531	Guscio	3131	3132	3179	3178	1	20.0
3532	Guscio	3132	3133	3180	3179	1	20.0
3533	Guscio	3133	3134	3181	3180	1	20.0
3534	Guscio	3134	3135	3182	3181	1	20.0
3535	Guscio	3135	3136	3183	3182	1	20.0
3536	Guscio	3136	3137	3184	3183	1	20.0
3537	Guscio	3137	3138	3185	3184	1	20.0
3538	Guscio	3138	3139	3186	3185	1	20.0
3539	Guscio	3139	3140	3187	3186	1	20.0
3540	Guscio	3140	3141	3188	3187	1	20.0
3541	Guscio	3141	3142	3189	3188	1	20.0
3542	Guscio	3142	3143	3190	3189	1	20.0
3543	Guscio	3143	3144	3191	3190	1	20.0
3544	Guscio	3144	3145	3192	3191	1	20.0

3545	Guscio	3145	3146	3193	3192	1	20.0
3546	Guscio	3146	3147	3194	3193	1	20.0
3547	Guscio	3147	3148	3195	3194	1	20.0
3548	Guscio	3148	3149	3196	3195	1	20.0
3549	Guscio	3150	3151	3198	3197	1	20.0
3550	Guscio	3151	3152	3199	3198	1	20.0
3551	Guscio	3152	3153	3200	3199	1	20.0
3552	Guscio	3153	3154	3201	3200	1	20.0
3553	Guscio	3154	3155	3202	3201	1	20.0
3554	Guscio	3155	3156	3203	3202	1	20.0
3555	Guscio	3156	3157	3204	3203	1	20.0
3556	Guscio	3157	3158	3205	3204	1	20.0
3557	Guscio	3158	3159	3206	3205	1	20.0
3558	Guscio	3159	3160	3207	3206	1	20.0
3559	Guscio	3160	3161	3208	3207	1	20.0
3560	Guscio	3161	3162	3209	3208	1	20.0
3561	Guscio	3162	3163	3210	3209	1	20.0
3562	Guscio	3163	3164	3211	3210	1	20.0
3563	Guscio	3164	3165	3212	3211	1	20.0
3564	Guscio	3165	3166	3213	3212	1	20.0
3565	Guscio	3166	3167	3214	3213	1	20.0
3566	Guscio	3167	3168	3215	3214	1	20.0
3567	Guscio	3168	3169	3216	3215	1	20.0
3568	Guscio	3169	3170	3217	3216	1	20.0
3569	Guscio	3170	3171	3218	3217	1	20.0
3570	Guscio	3171	3172	3219	3218	1	20.0
3571	Guscio	3172	3173	3220	3219	1	20.0
3572	Guscio	3173	3174	3221	3220	1	20.0
3573	Guscio	3174	3175	3222	3221	1	20.0
3574	Guscio	3175	3176	3223	3222	1	20.0
3575	Guscio	3176	3177	3224	3223	1	20.0
3576	Guscio	3177	3178	3225	3224	1	20.0
3577	Guscio	3178	3179	3226	3225	1	20.0
3578	Guscio	3179	3180	3227	3226	1	20.0
3579	Guscio	3180	3181	3228	3227	1	20.0
3580	Guscio	3181	3182	3229	3228	1	20.0
3581	Guscio	3182	3183	3230	3229	1	20.0
3582	Guscio	3183	3184	3231	3230	1	20.0
3583	Guscio	3184	3185	3232	3231	1	20.0
3584	Guscio	3185	3186	3233	3232	1	20.0
3585	Guscio	3186	3187	3234	3233	1	20.0
3586	Guscio	3187	3188	3235	3234	1	20.0
3587	Guscio	3188	3189	3236	3235	1	20.0
3588	Guscio	3189	3190	3237	3236	1	20.0
3589	Guscio	3190	3191	3238	3237	1	20.0
3590	Guscio	3191	3192	3239	3238	1	20.0
3591	Guscio	3192	3193	3240	3239	1	20.0
3592	Guscio	3193	3194	3241	3240	1	20.0
3593	Guscio	3194	3195	3242	3241	1	20.0
3594	Guscio	3195	3196	3243	3242	1	20.0
3595	Guscio	3197	3198	3245	3244	1	20.0
3596	Guscio	3198	3199	3246	3245	1	20.0
3597	Guscio	3199	3200	3247	3246	1	20.0
3598	Guscio	3200	3201	3248	3247	1	20.0
3599	Guscio	3201	3202	3249	3248	1	20.0
3600	Guscio	3202	3203	3250	3249	1	20.0
3601	Guscio	3203	3204	3251	3250	1	20.0
3602	Guscio	3204	3205	3252	3251	1	20.0
3603	Guscio	3205	3206	3253	3252	1	20.0
3604	Guscio	3206	3207	3254	3253	1	20.0
3605	Guscio	3207	3208	3255	3254	1	20.0
3606	Guscio	3208	3209	3256	3255	1	20.0
3607	Guscio	3209	3210	3257	3256	1	20.0
3608	Guscio	3210	3211	3258	3257	1	20.0
3609	Guscio	3211	3212	3259	3258	1	20.0
3610	Guscio	3212	3213	3260	3259	1	20.0
3611	Guscio	3213	3214	3261	3260	1	20.0
3612	Guscio	3214	3215	3262	3261	1	20.0
3613	Guscio	3215	3216	3263	3262	1	20.0
3614	Guscio	3216	3217	3264	3263	1	20.0
3615	Guscio	3217	3218	3265	3264	1	20.0
3616	Guscio	3218	3219	3266	3265	1	20.0
3617	Guscio	3219	3220	3267	3266	1	20.0
3618	Guscio	3220	3221	3268	3267	1	20.0
3619	Guscio	3221	3222	3269	3268	1	20.0
3620	Guscio	3222	3223	3270	3269	1	20.0
3621	Guscio	3223	3224	3271	3270	1	20.0
3622	Guscio	3224	3225	3272	3271	1	20.0

3623	Guscio	3225	3226	3273	3272	1	20.0
3624	Guscio	3226	3227	3274	3273	1	20.0
3625	Guscio	3227	3228	3275	3274	1	20.0
3626	Guscio	3228	3229	3276	3275	1	20.0
3627	Guscio	3229	3230	3277	3276	1	20.0
3628	Guscio	3230	3231	3278	3277	1	20.0
3629	Guscio	3231	3232	3279	3278	1	20.0
3630	Guscio	3232	3233	3280	3279	1	20.0
3631	Guscio	3233	3234	3281	3280	1	20.0
3632	Guscio	3234	3235	3282	3281	1	20.0
3633	Guscio	3235	3236	3283	3282	1	20.0
3634	Guscio	3236	3237	3284	3283	1	20.0
3635	Guscio	3237	3238	3285	3284	1	20.0
3636	Guscio	3238	3239	3286	3285	1	20.0
3637	Guscio	3239	3240	3287	3286	1	20.0
3638	Guscio	3240	3241	3288	3287	1	20.0
3639	Guscio	3241	3242	3289	3288	1	20.0
3640	Guscio	3242	3243	3290	3289	1	20.0
3641	Guscio	3244	3245	3292	3291	1	20.0
3642	Guscio	3245	3246	3293	3292	1	20.0
3643	Guscio	3246	3247	3294	3293	1	20.0
3644	Guscio	3247	3248	3295	3294	1	20.0
3645	Guscio	3248	3249	3296	3295	1	20.0
3646	Guscio	3249	3250	3297	3296	1	20.0
3647	Guscio	3250	3251	3298	3297	1	20.0
3648	Guscio	3251	3252	3299	3298	1	20.0
3649	Guscio	3252	3253	3300	3299	1	20.0
3650	Guscio	3253	3254	3301	3300	1	20.0
3651	Guscio	3254	3255	3302	3301	1	20.0
3652	Guscio	3255	3256	3303	3302	1	20.0
3653	Guscio	3256	3257	3304	3303	1	20.0
3654	Guscio	3257	3258	3305	3304	1	20.0
3655	Guscio	3258	3259	3306	3305	1	20.0
3656	Guscio	3259	3260	3307	3306	1	20.0
3657	Guscio	3260	3261	3308	3307	1	20.0
3658	Guscio	3261	3262	3309	3308	1	20.0
3659	Guscio	3262	3263	3310	3309	1	20.0
3660	Guscio	3263	3264	3311	3310	1	20.0
3661	Guscio	3264	3265	3312	3311	1	20.0
3662	Guscio	3265	3266	3313	3312	1	20.0
3663	Guscio	3266	3267	3314	3313	1	20.0
3664	Guscio	3267	3268	3315	3314	1	20.0
3665	Guscio	3268	3269	3316	3315	1	20.0
3666	Guscio	3269	3270	3317	3316	1	20.0
3667	Guscio	3270	3271	3318	3317	1	20.0
3668	Guscio	3271	3272	3319	3318	1	20.0
3669	Guscio	3272	3273	3320	3319	1	20.0
3670	Guscio	3273	3274	3321	3320	1	20.0
3671	Guscio	3274	3275	3322	3321	1	20.0
3672	Guscio	3275	3276	3323	3322	1	20.0
3673	Guscio	3276	3277	3324	3323	1	20.0
3674	Guscio	3277	3278	3325	3324	1	20.0
3675	Guscio	3278	3279	3326	3325	1	20.0
3676	Guscio	3279	3280	3327	3326	1	20.0
3677	Guscio	3280	3281	3328	3327	1	20.0
3678	Guscio	3281	3282	3329	3328	1	20.0
3679	Guscio	3282	3283	3330	3329	1	20.0
3680	Guscio	3283	3284	3331	3330	1	20.0
3681	Guscio	3284	3285	3332	3331	1	20.0
3682	Guscio	3285	3286	3333	3332	1	20.0
3683	Guscio	3286	3287	3334	3333	1	20.0
3684	Guscio	3287	3288	3335	3334	1	20.0
3685	Guscio	3288	3289	3336	3335	1	20.0
3686	Guscio	3289	3290	3337	3336	1	20.0
3687	Guscio	3291	3292	3339	3338	1	20.0
3688	Guscio	3292	3293	3340	3339	1	20.0
3689	Guscio	3293	3294	3341	3340	1	20.0
3690	Guscio	3294	3295	3342	3341	1	20.0
3691	Guscio	3295	3296	3343	3342	1	20.0
3692	Guscio	3296	3297	3344	3343	1	20.0
3693	Guscio	3297	3298	3345	3344	1	20.0
3694	Guscio	3298	3299	3346	3345	1	20.0
3695	Guscio	3299	3300	3347	3346	1	20.0
3696	Guscio	3300	3301	3348	3347	1	20.0
3697	Guscio	3301	3302	3349	3348	1	20.0
3698	Guscio	3302	3303	3350	3349	1	20.0
3699	Guscio	3303	3304	3351	3350	1	20.0
3700	Guscio	3304	3305	3352	3351	1	20.0

3701	Guscio	3305	3306	3353	3352	1	20.0
3702	Guscio	3306	3307	3354	3353	1	20.0
3703	Guscio	3307	3308	3355	3354	1	20.0
3704	Guscio	3308	3309	3356	3355	1	20.0
3705	Guscio	3309	3310	3357	3356	1	20.0
3706	Guscio	3310	3311	3358	3357	1	20.0
3707	Guscio	3311	3312	3359	3358	1	20.0
3708	Guscio	3312	3313	3360	3359	1	20.0
3709	Guscio	3313	3314	3361	3360	1	20.0
3710	Guscio	3314	3315	3362	3361	1	20.0
3711	Guscio	3315	3316	3363	3362	1	20.0
3712	Guscio	3316	3317	3364	3363	1	20.0
3713	Guscio	3317	3318	3365	3364	1	20.0
3714	Guscio	3318	3319	3366	3365	1	20.0
3715	Guscio	3319	3320	3367	3366	1	20.0
3716	Guscio	3320	3321	3368	3367	1	20.0
3717	Guscio	3321	3322	3369	3368	1	20.0
3718	Guscio	3322	3323	3370	3369	1	20.0
3719	Guscio	3323	3324	3371	3370	1	20.0
3720	Guscio	3324	3325	3372	3371	1	20.0
3721	Guscio	3325	3326	3373	3372	1	20.0
3722	Guscio	3326	3327	3374	3373	1	20.0
3723	Guscio	3327	3328	3375	3374	1	20.0
3724	Guscio	3328	3329	3376	3375	1	20.0
3725	Guscio	3329	3330	3377	3376	1	20.0
3726	Guscio	3330	3331	3378	3377	1	20.0
3727	Guscio	3331	3332	3379	3378	1	20.0
3728	Guscio	3332	3333	3380	3379	1	20.0
3729	Guscio	3333	3334	3381	3380	1	20.0
3730	Guscio	3334	3335	3382	3381	1	20.0
3731	Guscio	3335	3336	3383	3382	1	20.0
3732	Guscio	3336	3337	3384	3383	1	20.0

AZIONE SISMICA

L'azione sismica sulle costruzioni è valutata a partire dalla "pericolosità sismica di base", in condizioni ideali di sito di riferimento rigido con superficie topografica orizzontale.
Allo stato attuale, la pericolosità sismica su reticolo di riferimento nell'intervallo di riferimento è fornita dai dati pubblicati sul sito http://esse1.mi.ingv.it/. Per punti non coincidenti con il reticolo di riferimento e periodi di ritorno non contemplati direttamente si opera come indicato nell' allegato alle NTC (rispettivamente media pesata e interpolazione).

L' azione sismica viene definita in relazione ad un periodo di riferimento Vr che si ricava, per ciascun tipo di costruzione, moltiplicandone la vita nominale per il coefficiente d'uso (vedi tabella Parametri della struttura). Fissato il periodo di riferimento Vr e la probabilità di superamento Pver associata a ciascuno degli stati limite considerati, si ottiene il periodo di ritorno Tr e i relativi parametri di pericolosità sismica (vedi tabella successiva):
ag: accelerazione orizzontale massima del terreno;
Fo: valore massimo del fattore di amplificazione dello spettro in accelerazione orizzontale;
T*c: periodo di inizio del tratto a velocità costante dello spettro in accelerazione orizzontale;

Parametri della struttura					
Classe d'uso	Vita Vn [anni]	Coeff. Uso	Periodo Vr [anni]	Tipo di suolo	Categoria topografica
III	50.0	1.5	75.0	C	T1

Individuati su reticolo di riferimento i parametri di pericolosità sismica si valutano i parametri spettrali riportati in tabella:
S è il coefficiente che tiene conto della categoria di sottosuolo e delle condizioni topografiche mediante la relazione seguente S = Ss*St (3.2.3)
Fo è il fattore che quantifica l'amplificazione spettrale massima, su sito di riferimento rigido orizzontale
Fv è il fattore che quantifica l'amplificazione spettrale massima verticale, in termini di accelerazione orizzontale massima del terreno ag su sito di riferimento rigido orizzontale
Tb è il periodo corrispondente all'inizio del tratto dello spettro ad accelerazione costante.
Tc è il periodo corrispondente all'inizio del tratto dello spettro a velocità costante.
Td è il periodo corrispondente all'inizio del tratto dello spettro a spostamento costante.

Id nodo	**Longitudine**	**Latitudine**	**Distanza**
			Km
Loc.	12.168	42.108	
27619	12.143	42.077	4.027
27620	12.210	42.078	4.841
27398	12.209	42.128	4.032
27397	12.142	42.127	2.954

SL	Pver	Tr	ag	Fo	T*c
		Anni	g		sec
SLO	81.0	45.0	0.036	2.660	0.250
SLD	63.0	75.0	0.041	2.670	0.270
SLV	10.0	712.0	0.073	2.910	0.340
SLC	5.0	1462.0	0.085	2.970	0.370

SL	ag	S	Fo	Fv	Tb	Tc	Td
	g				sec	sec	sec
SLO	0.036	1.500	2.660	0.679	0.138	0.415	1.743
SLD	0.042	1.500	2.670	0.734	0.146	0.437	1.766
SLV	0.073	1.500	2.910	1.064	0.170	0.510	1.893
SLC	0.086	1.500	2.970	1.172	0.180	0.539	1.942

RISULTATI ANALISI SISMICHE

Il programma consente l'analisi di diverse configurazioni sismiche.

Sono previsti, infatti, i seguenti casi di carico:

9. Esk caso di carico sismico con analisi statica equivalente
10. Edk caso di carico sismico con analisi dinamica

Ciascun caso di carico è caratterizzato da un angolo di ingresso e da una configurazione di masse determinante la forza sismica complessiva (si rimanda al capitolo relativo ai casi di carico per chiarimenti inerenti questo aspetto).

Nella colonna Note, in funzione della norma in uso sono riportati i parametri fondamentali che caratterizzano l' azione sismica: in particolare possono essere presenti i seguenti valori:

Angolo di ingresso	Angolo di ingresso dell'azione sismica orizzontale
Fattore di importanza	Fattore di importanza dell'edificio, in base alla categoria di appartenenza
Zona sismica	Zona sismica
Accelerazione ag	Accelerazione orizzontale massima sul suolo
Categoria suolo	Categoria di profilo stratigrafico del suolo di fondazione
Fattore q	Fattore di struttura/di comportamento. Dipendente dalla tipologia strutturale
Fattore di sito S	Fattore dipendente dalla stratigrafia e dal profilo topografico
Classe di duttilità CD	Classe di duttilità della struttura – "A" duttilità alta, "B" duttilità bassa
Fattore riduz. SLD	Fattore di riduzione dello spettro elastico per lo stato limite di danno
Periodo proprio T1	Periodo proprio di vibrazione della struttura
Coefficiente Lambda	Coefficiente dipendente dal periodo proprio T1 e dal numero di piani della struttura
Ordinata spettro Sd(T1)	Valore delle ordinate dello spettro di progetto per lo stato limite ultimo, componente orizzontale (verticale Svd)
Ordinata spettro Se(T1)	Valore delle ordinate dello spettro elastico ridotta del fattore SLD per lo stato limite di danno, componente orizzontale (verticale Sve)
Ordinata spettro S (Tb-Tc)	Valore dell' ordinata dello spettro in uso nel tratto costante
numero di modi considerati	Numero di modi di vibrare della struttura considerati nell'analisi dinamica

Per ciascun caso di carico sismico viene riportato l'insieme di dati sotto riportati (le masse sono espresse in unità di forza):

a) **analisi sismica statica equivalente**:
- quota, posizione del centro di applicazione e azione orizzontale risultante, posizione del baricentro delle rigidezze, rapporto r/Ls (per strutture a nucleo), indici di regolarità e/r secondo EC8 4.2.3.2
- azione sismica complessiva

b) **analisi sismica dinamica con spettro di risposta**:
- quota, posizione del centro di massa e massa risultante, posizione del baricentro delle rigidezze, rapporto r/Ls (per strutture a nucleo) **,** indici di regolarità e/r secondo EC8 4.2.3.2
- frequenza, periodo, accelerazione spettrale, massa eccitata nelle tre direzioni globali per tutti i modi
- massa complessiva ed aliquota di massa complessiva eccitata.

Per ciascuna combinazione sismica definita SLD o SLO viene riportato il livello di deformazione etaT (dr) degli elementi strutturali verticali. Per semplicità di consultazione il livello è espresso anche in unità 1000*etaT/h da confrontare direttamente con i valori forniti nella norma (es. 5 per edifici con tamponamenti collegati rigidamente alla struttura, 10.0 per edifici con tamponamenti collegati elasticamente, 3 per edifici in muratura ordinaria, 4 per edifici in muratura armata).

CDC	Tipo	Sigla Id	Note
8	Edk	CDC=Ed (dinamico SLO) alfa=0.0 (ecc. +)	
			categoria suolo: C
			fattore di sito S = 1.500
			ordinata spettro (tratto Tb-Tc) = 0.143 g
			angolo di ingresso:0.0
			eccentricità aggiuntiva: positiva
			periodo proprio T1: 0.048 sec.
			numero di modi considerati: 9
			combinaz. modale: CQC

Quota	M Sismica x g	Pos. GX	Pos. GY	E agg. X-X	E agg. Y-Y	Pos. KX	Pos. KY	(r/Ls)^2	rapp. ex/rx	rapp. ey/ry
m	daN	m	m	m	m	m	m			
4.13	1968.83	10.50	5.50	0.0	0.0	0.0	0.0	0.0	0.0	0.0
4.10	7281.30	10.50	5.20	0.0	0.0	0.0	0.0	0.0	0.0	0.0
4.05	7479.57	10.50	4.69	0.0	0.0	0.0	0.0	0.0	0.0	0.0
4.00	7367.41	10.50	4.18	0.0	0.0	0.0	0.0	0.0	0.0	0.0
3.95	7255.24	10.50	3.67	0.0	0.0	0.0	0.0	0.0	0.0	0.0
3.90	7143.07	10.50	3.16	0.0	0.0	0.0	0.0	0.0	0.0	0.0
3.84	3861.17	10.50	2.65	0.0	0.0	0.0	0.0	0.0	0.0	0.0
3.84	3678.65	10.50	2.60	0.0	0.0	0.0	0.0	0.0	0.0	0.0
3.79	6693.71	10.50	2.09	0.0	0.0	0.0	0.0	0.0	0.0	0.0
3.74	6693.40	10.50	1.58	0.0	0.0	0.0	0.0	0.0	0.0	0.0
3.69	1.066e+04	10.50	4.34	0.0	-0.13	20.25	5.20	1.6217e-04	6.243	11.534
3.69	6756.45	10.50	1.07	0.0	0.0	0.0	0.0	0.0	0.0	0.0
3.64	5959.57	10.50	0.55	0.0	0.0	10.50	0.55	1.467	0.0	0.0
3.61	2296.70	10.50	0.20	0.0	0.0	0.0	0.0	0.0	0.0	0.0
3.42	508.27	10.50	0.55	0.0	0.0	0.0	0.0	0.0	0.0	0.0
3.33	1136.14	10.50	0.55	0.0	0.0	0.0	0.0	0.0	0.0	0.0
3.30	1236.07	10.50	0.55	0.0	0.0	0.0	0.0	0.0	0.0	0.0
3.28	1.208e+04	10.50	4.24	0.0	-0.13	20.25	5.20	1.6217e-04	6.243	12.893
3.19	3911.44	10.50	0.55	0.0	0.0	10.50	0.55	1.556	0.0	0.0
2.88	4.235e+04	10.50	4.00	0.0	-0.13	9.94	5.20	0.041	0.093	1.010
2.58	8876.25	10.50	4.24	0.0	-0.13	9.94	5.20	0.041	0.093	0.807
2.27	8876.25	10.50	4.24	0.0	-0.13	9.94	5.20	0.041	0.093	0.807
1.98	4.075e+04	10.50	3.99	0.0	-0.13	9.94	5.20	0.041	0.093	1.018
1.68	8876.25	10.50	4.24	0.0	-0.13	9.94	5.20	0.041	0.093	0.807
1.38	8876.25	10.50	4.24	0.0	-0.13	9.94	5.20	0.041	0.093	0.807
1.07	4.161e+04	10.50	4.00	0.0	-0.13	9.94	5.20	0.041	0.093	1.014
0.72	1.060e+04	10.50	4.24	0.0	-0.13	10.50	5.20	0.035	0.0	0.875
0.36	1.060e+04	10.50	4.24	0.0	-0.13	10.50	5.20	0.035	0.0	0.875
1.00e-05	548.26	13.00	3.92	0.0	-0.08	0.0	0.0	0.0	0.0	0.0
Risulta	2.859e+05									

Modo	Frequenza	Periodo	Acc. Spettrale	M efficace X x g	%	M efficace Y x g	%	M efficace Z x g	%	Energia	Energia x v
	Hz	sec	g	daN		daN		daN			
1	3.596	0.278	0.143	1.15e-03	0.0	1.796e+05	62.8	2.988e+04	10.5	0.0	0.0
2	5.574	0.179	0.143	7.504e+04	26.2	0.11	4.02e-05	0.36	1.26e-04	0.0	0.0
3	7.019	0.142	0.143	98.90	3.46e-02	806.87	0.3	1.471e+04	5.1	0.0	0.0
4	7.374	0.136	0.141	8.61	3.01e-03	2.162e+04	7.6	2.410e+05	84.3	0.0	0.0
5	10.002	0.100	0.118	968.66	0.3	1.81	6.33e-04	10.19	3.56e-03	0.0	0.0
6	11.271	0.089	0.111	13.72	4.80e-03	30.37	1.06e-02	222.22	7.77e-02	0.0	0.0
7	20.894	0.048	0.085	2.019e+05	70.6	4.64	1.62e-03	0.0	0.0	0.0	0.0
8	22.714	0.044	0.082	95.88	3.35e-02	1.715e+04	6.0	20.50	7.17e-03	0.0	0.0
9	36.518	0.027	0.071	7.12	2.49e-03	5.667e+04	19.8	70.95	2.48e-02	0.0	0.0
Risulta				2.782e+05		2.758e+05		2.859e+05			
In percentuale				97.28		96.47		99.98			

CDC	Tipo	Sigla Id	Note
9	Edk	CDC=Ed (dinamico SLO) alfa=0.0 (ecc. -)	
			categoria suolo: C
			fattore di sito S = 1.500
			ordinata spettro (tratto Tb-Tc) = 0.143 g
			angolo di ingresso:0.0
			eccentricità aggiuntiva: negativa
			periodo proprio T1: 0.048 sec.
			numero di modi considerati: 9
			combinaz. modale: CQC

Quota	M Sismica x g	Pos. GX	Pos. GY	E agg. X-X	E agg. Y-Y	Pos. KX	Pos. KY	(r/Ls)^2	rapp. ex/rx	rapp. ey/ry
m	daN	m	m	m	m	m	m			
4.13	1968.83	10.50	5.50	0.0	0.0	0.0	0.0	0.0	0.0	0.0
4.10	7281.30	10.50	5.20	0.0	0.0	0.0	0.0	0.0	0.0	0.0
4.05	7479.57	10.50	4.69	0.0	0.0	0.0	0.0	0.0	0.0	0.0
4.00	7367.41	10.50	4.18	0.0	0.0	0.0	0.0	0.0	0.0	0.0
3.95	7255.24	10.50	3.67	0.0	0.0	0.0	0.0	0.0	0.0	0.0
3.90	7143.07	10.50	3.16	0.0	0.0	0.0	0.0	0.0	0.0	0.0
3.84	3861.17	10.50	2.65	0.0	0.0	0.0	0.0	0.0	0.0	0.0
3.84	3678.65	10.50	2.60	0.0	0.0	0.0	0.0	0.0	0.0	0.0
3.79	6693.71	10.50	2.09	0.0	0.0	0.0	0.0	0.0	0.0	0.0
3.74	6693.40	10.50	1.58	0.0	0.0	0.0	0.0	0.0	0.0	0.0

Quota	M Sismica x g	Pos. GX	Pos. GY	E agg. X-X	E agg. Y-Y	Pos. KX	Pos. KY	(r/Ls)^2	rapp. ex/rx	rapp. ey/ry
3.69	1.066e+04	10.50	4.34	0.0	0.13	20.25	5.20	1.6217e-04	6.243	11.534
3.69	6756.45	10.50	1.07	0.0	0.0	0.0	0.0	0.0	0.0	0.0
3.64	5959.57	10.50	0.55	0.0	0.0	10.50	0.55	1.467	0.0	0.0
3.61	2296.70	10.50	0.20	0.0	0.0	0.0	0.0	0.0	0.0	0.0
3.42	508.27	10.50	0.55	0.0	0.0	0.0	0.0	0.0	0.0	0.0
3.33	1136.14	10.50	0.55	0.0	0.0	0.0	0.0	0.0	0.0	0.0
3.30	1236.07	10.50	0.55	0.0	0.0	0.0	0.0	0.0	0.0	0.0
3.28	1.208e+04	10.50	4.24	0.0	0.13	20.25	5.20	1.6217e-04	6.243	12.893
3.19	3911.44	10.50	0.55	0.0	0.0	10.50	0.55	1.556	0.0	0.0
2.88	4.235e+04	10.50	4.00	0.0	0.13	9.94	5.20	0.041	0.093	1.010
2.58	8876.25	10.50	4.24	0.0	0.13	9.94	5.20	0.041	0.093	0.807
2.27	8876.25	10.50	4.24	0.0	0.13	9.94	5.20	0.041	0.093	0.807
1.98	4.075e+04	10.50	3.99	0.0	0.13	9.94	5.20	0.041	0.093	1.018
1.68	8876.25	10.50	4.24	0.0	0.13	9.94	5.20	0.041	0.093	0.807
1.38	8876.25	10.50	4.24	0.0	0.13	9.94	5.20	0.041	0.093	0.807
1.07	4.161e+04	10.50	4.00	0.0	0.13	9.94	5.20	0.041	0.093	1.014
0.72	1.060e+04	10.50	4.24	0.0	0.13	10.50	5.20	0.035	0.0	0.875
0.36	1.060e+04	10.50	4.24	0.0	0.13	10.50	5.20	0.035	0.0	0.875
1.00e-05	548.26	13.00	3.92	0.0	0.08	0.0	0.0	0.0	0.0	0.0
Risulta	2.859e+05									

Modo	Frequenza	Periodo	Acc. Spettrale	M efficace X x g	%	M efficace Y x g	%	M efficace Z x g	%	Energia	Energia x v
	Hz	sec	g	daN		daN		daN			
1	3.596	0.278	0.143	1.11e-03	0.0	1.796e+05	62.8	2.988e+04	10.5	0.0	0.0
2	5.601	0.179	0.143	7.259e+04	25.4	0.12	4.11e-05	0.36	1.27e-04	0.0	0.0
3	7.019	0.142	0.143	103.52	3.62e-02	804.38	0.3	1.468e+04	5.1	0.0	0.0
4	7.374	0.136	0.141	9.05	3.17e-03	2.162e+04	7.6	2.410e+05	84.3	0.0	0.0
5	9.801	0.102	0.120	850.17	0.3	3.43	1.20e-03	14.75	5.16e-03	0.0	0.0
6	11.291	0.089	0.111	15.13	5.29e-03	28.94	1.01e-02	219.55	7.68e-02	0.0	0.0
7	20.701	0.048	0.085	2.043e+05	71.4	0.04	1.48e-05	5.49e-03	1.92e-06	0.0	0.0
8	22.737	0.044	0.082	0.14	4.86e-05	1.728e+04	6.0	20.42	7.14e-03	0.0	0.0
9	36.565	0.027	0.071	0.09	3.01e-05	5.658e+04	19.8	71.20	2.49e-02	0.0	0.0
Risulta				2.778e+05		2.759e+05		2.859e+05			
In percentuale				97.17		96.48		99.98			

CDC	Tipo	Sigla Id	Note
10	Edk	CDC=Ed (dinamico SLO) alfa=90.00 (ecc. +)	
			categoria suolo: C
			fattore di sito S = 1.500
			ordinata spettro (tratto Tb-Tc) = 0.143 g
			angolo di ingresso:90.00
			eccentricità aggiuntiva: positiva
			periodo proprio T1: 0.279 sec.
			numero di modi considerati: 9
			combinaz. modale: CQC

Quota	M Sismica x g	Pos. GX	Pos. GY	E agg. X-X	E agg. Y-Y	Pos. KX	Pos. KY	(r/Ls)^2	rapp. ex/rx	rapp. ey/ry
m	daN	m	m	m	m	m	m			
4.13	1968.83	10.50	5.50	1.03	0.0	0.0	0.0	0.0	0.0	0.0
4.10	7281.30	10.50	5.20	1.03	0.0	0.0	0.0	0.0	0.0	0.0
4.05	7479.57	10.50	4.69	1.03	0.0	0.0	0.0	0.0	0.0	0.0
4.00	7367.41	10.50	4.18	1.03	0.0	0.0	0.0	0.0	0.0	0.0
3.95	7255.24	10.50	3.67	1.03	0.0	0.0	0.0	0.0	0.0	0.0
3.90	7143.07	10.50	3.16	1.03	0.0	0.0	0.0	0.0	0.0	0.0
3.84	3861.17	10.50	2.65	1.03	0.0	0.0	0.0	0.0	0.0	0.0
3.84	3678.65	10.50	2.60	1.03	0.0	0.0	0.0	0.0	0.0	0.0
3.79	6693.71	10.50	2.09	1.03	0.0	0.0	0.0	0.0	0.0	0.0
3.74	6693.40	10.50	1.58	1.03	0.0	0.0	0.0	0.0	0.0	0.0
3.69	1.066e+04	10.50	4.34	1.00	0.0	20.25	5.20	1.6217e-04	6.243	11.534
3.69	6756.45	10.50	1.07	1.03	0.0	0.0	0.0	0.0	0.0	0.0
3.64	5959.57	10.50	0.55	1.03	0.0	10.50	0.55	1.467	0.0	0.0
3.61	2296.70	10.50	0.20	1.03	0.0	0.0	0.0	0.0	0.0	0.0
3.42	508.27	10.50	0.55	0.77	0.0	0.0	0.0	0.0	0.0	0.0
3.33	1136.14	10.50	0.55	0.86	0.0	0.0	0.0	0.0	0.0	0.0
3.30	1236.07	10.50	0.55	0.41	0.0	0.0	0.0	0.0	0.0	0.0
3.28	1.208e+04	10.50	4.24	1.00	0.0	20.25	5.20	1.6217e-04	6.243	12.893
3.19	3911.44	10.50	0.55	1.00	0.0	10.50	0.55	1.556	0.0	0.0
2.88	4.235e+04	10.50	4.00	1.00	0.0	9.94	5.20	0.041	0.093	1.010
2.58	8876.25	10.50	4.24	1.00	0.0	9.94	5.20	0.041	0.093	0.807

Quota	M Sismica x g	Pos. GX	Pos. GY	E agg. X-X	E agg. Y-Y	Pos. KX	Pos. KY	(r/Ls)^2	rapp. ex/rx	rapp. ey/ry
2.27	8876.25	10.50	4.24	1.00	0.0	9.94	5.20	0.041	0.093	0.807
1.98	4.075e+04	10.50	3.99	1.00	0.0	9.94	5.20	0.041	0.093	1.018
1.68	8876.25	10.50	4.24	1.00	0.0	9.94	5.20	0.041	0.093	0.807
1.38	8876.25	10.50	4.24	1.00	0.0	9.94	5.20	0.041	0.093	0.807
1.07	4.161e+04	10.50	4.00	1.00	0.0	9.94	5.20	0.041	0.093	1.014
0.72	1.060e+04	10.50	4.24	1.00	0.0	10.50	5.20	0.035	0.0	0.875
0.36	1.060e+04	10.50	4.24	1.00	0.0	10.50	5.20	0.035	0.0	0.875
1.00e-05	548.26	13.00	3.92	0.77	0.0	0.0	0.0	0.0	0.0	0.0
Risulta	2.859e+05									

Modo	Frequenza	Periodo	Acc. Spettrale	M efficace X x g	%	M efficace Y x g	%	M efficace Z x g	%	Energia	Energia x v
	Hz	sec	g	daN		daN		daN			
1	3.585	0.279	0.143	142.79	4.99e-02	1.798e+05	62.9	2.934e+04	10.3	0.0	0.0
2	5.606	0.178	0.143	7.388e+04	25.8	31.71	1.11e-02	1207.32	0.4	0.0	0.0
3	6.752	0.148	0.143	121.92	4.26e-02	230.36	8.06e-02	7188.04	2.5	0.0	0.0
4	7.363	0.136	0.141	182.79	6.39e-02	2.194e+04	7.7	2.462e+05	86.1	0.0	0.0
5	8.925	0.112	0.126	27.81	9.72e-03	95.31	3.33e-02	1750.99	0.6	0.0	0.0
6	9.762	0.102	0.120	713.01	0.2	17.30	6.05e-03	15.33	5.36e-03	0.0	0.0
7	12.837	0.078	0.104	595.31	0.2	136.99	4.79e-02	62.89	2.20e-02	0.0	0.0
8	20.835	0.048	0.085	2.020e+05	70.6	257.15	8.99e-02	2.99	1.04e-03	0.0	0.0
9	28.754	0.035	0.076	596.58	0.2	6.168e+04	21.6	79.93	2.80e-02	0.0	0.0
Risulta				2.782e+05		2.642e+05		2.859e+05			
In percentuale				97.30		92.41		99.98			

CDC	Tipo	Sigla Id	Note
11	Edk	CDC=Ed (dinamico SLO) alfa=90.00 (ecc. -)	
			categoria suolo: C
			fattore di sito S = 1.500
			ordinata spettro (tratto Tb-Tc) = 0.143 g
			angolo di ingresso:90.00
			eccentricità aggiuntiva: negativa
			periodo proprio T1: 0.279 sec.
			numero di modi considerati: 9
			combinaz. modale: CQC

Quota	M Sismica x g	Pos. GX	Pos. GY	E agg. X-X	E agg. Y-Y	Pos. KX	Pos. KY	(r/Ls)^2	rapp. ex/rx	rapp. ey/ry
m	daN	m	m	m	m	m	m			
4.13	1968.83	10.50	5.50	-1.03	0.0	0.0	0.0	0.0	0.0	0.0
4.10	7281.30	10.50	5.20	-1.03	0.0	0.0	0.0	0.0	0.0	0.0
4.05	7479.57	10.50	4.69	-1.03	0.0	0.0	0.0	0.0	0.0	0.0
4.00	7367.41	10.50	4.18	-1.03	0.0	0.0	0.0	0.0	0.0	0.0
3.95	7255.24	10.50	3.67	-1.03	0.0	0.0	0.0	0.0	0.0	0.0
3.90	7143.07	10.50	3.16	-1.03	0.0	0.0	0.0	0.0	0.0	0.0
3.84	3861.17	10.50	2.65	-1.03	0.0	0.0	0.0	0.0	0.0	0.0
3.84	3678.65	10.50	2.60	-1.03	0.0	0.0	0.0	0.0	0.0	0.0
3.79	6693.71	10.50	2.09	-1.03	0.0	0.0	0.0	0.0	0.0	0.0
3.74	6693.40	10.50	1.58	-1.03	0.0	0.0	0.0	0.0	0.0	0.0
3.69	1.066e+04	10.50	4.34	-1.00	0.0	20.25	5.20	1.6217e-04	6.243	11.534
3.69	6756.45	10.50	1.07	-1.03	0.0	0.0	0.0	0.0	0.0	0.0
3.64	5959.57	10.50	0.55	-1.03	0.0	10.50	0.55	1.467	0.0	0.0
3.61	2296.70	10.50	0.20	-1.03	0.0	0.0	0.0	0.0	0.0	0.0
3.42	508.27	10.50	0.55	-0.77	0.0	0.0	0.0	0.0	0.0	0.0
3.33	1136.14	10.50	0.55	-0.86	0.0	0.0	0.0	0.0	0.0	0.0
3.30	1236.07	10.50	0.55	-0.41	0.0	0.0	0.0	0.0	0.0	0.0
3.28	1.208e+04	10.50	4.24	-1.00	0.0	20.25	5.20	1.6217e-04	6.243	12.893
3.19	3911.44	10.50	0.55	-1.00	0.0	10.50	0.55	1.556	0.0	0.0
2.88	4.235e+04	10.50	4.00	-1.00	0.0	9.94	5.20	0.041	0.093	1.010
2.58	8876.25	10.50	4.24	-1.00	0.0	9.94	5.20	0.041	0.093	0.807
2.27	8876.25	10.50	4.24	-1.00	0.0	9.94	5.20	0.041	0.093	0.807
1.98	4.075e+04	10.50	3.99	-1.00	0.0	9.94	5.20	0.041	0.093	1.018
1.68	8876.25	10.50	4.24	-1.00	0.0	9.94	5.20	0.041	0.093	0.807
1.38	8876.25	10.50	4.24	-1.00	0.0	9.94	5.20	0.041	0.093	0.807
1.07	4.161e+04	10.50	4.00	-1.00	0.0	9.94	5.20	0.041	0.093	1.014
0.72	1.060e+04	10.50	4.24	-1.00	0.0	10.50	5.20	0.035	0.0	0.875
0.36	1.060e+04	10.50	4.24	-1.00	0.0	10.50	5.20	0.035	0.0	0.875
1.00e-05	548.26	13.00	3.92	-0.77	0.0	0.0	0.0	0.0	0.0	0.0
Risulta	2.859e+05									

Modo	Frequenza	Periodo	Acc. Spettrale	M efficace X x g	%	M efficace Y x g	%	M efficace Z x g	%	Energia	Energia x v
	Hz	sec	g	daN		daN		daN			
1	3.586	0.279	0.143	141.56	4.95e-02	1.799e+05	62.9	2.936e+04	10.3	0.0	0.0
2	5.606	0.178	0.143	7.385e+04	25.8	24.86	8.69e-03	1300.77	0.5	0.0	0.0
3	7.323	0.137	0.142	194.50	6.80e-02	2.066e+04	7.2	2.415e+05	84.5	0.0	0.0
4	7.908	0.126	0.135	207.86	7.27e-02	1586.43	0.6	1.285e+04	4.5	0.0	0.0
5	8.849	0.113	0.127	314.44	0.1	29.09	1.02e-02	581.61	0.2	0.0	0.0
6	10.209	0.098	0.117	448.52	0.2	41.50	1.45e-02	46.52	1.63e-02	0.0	0.0
7	12.733	0.079	0.104	132.65	4.64e-02	32.50	1.14e-02	126.52	4.42e-02	0.0	0.0
8	20.787	0.048	0.085	2.017e+05	70.5	348.88	0.1	3.43	1.20e-03	0.0	0.0
9	28.893	0.035	0.076	972.45	0.3	6.214e+04	21.7	73.51	2.57e-02	0.0	0.0
Risulta				2.780e+05		2.647e+05		2.859e+05			
In percentuale				97.21		92.58		99.97			

CDC	Tipo	Sigla Id	Note
12	Edk	CDC=Ed (dinamico SLD) alfa=0.0 (ecc. +)	
			categoria suolo: C
			fattore di sito S = 1.500
			ordinata spettro (tratto Tb-Tc) = 0.166 g
			angolo di ingresso:0.0
			eccentricità aggiuntiva: positiva
			periodo proprio T1: 0.048 sec.
			numero di modi considerati: 9
			combinaz. modale: CQC

Quota	M Sismica x g	Pos. GX	Pos. GY	E agg. X-X	E agg. Y-Y	Pos. KX	Pos. KY	(r/Ls)^2	rapp. ex/rx	rapp. ey/ry
m	daN	m	m	m	m	m	m			
4.13	1968.83	10.50	5.50	0.0	0.0	0.0	0.0	0.0	0.0	0.0
4.10	7281.30	10.50	5.20	0.0	0.0	0.0	0.0	0.0	0.0	0.0
4.05	7479.57	10.50	4.69	0.0	0.0	0.0	0.0	0.0	0.0	0.0
4.00	7367.41	10.50	4.18	0.0	0.0	0.0	0.0	0.0	0.0	0.0
3.95	7255.24	10.50	3.67	0.0	0.0	0.0	0.0	0.0	0.0	0.0
3.90	7143.07	10.50	3.16	0.0	0.0	0.0	0.0	0.0	0.0	0.0
3.84	3861.17	10.50	2.65	0.0	0.0	0.0	0.0	0.0	0.0	0.0
3.84	3678.65	10.50	2.60	0.0	0.0	0.0	0.0	0.0	0.0	0.0
3.79	6693.71	10.50	2.09	0.0	0.0	0.0	0.0	0.0	0.0	0.0
3.74	6693.40	10.50	1.58	0.0	0.0	0.0	0.0	0.0	0.0	0.0
3.69	1.066e+04	10.50	4.34	0.0	-0.13	20.25	5.20	1.6217e-04	6.243	11.534
3.69	6756.45	10.50	1.07	0.0	0.0	0.0	0.0	0.0	0.0	0.0
3.64	5959.57	10.50	0.55	0.0	0.0	10.50	0.55	1.467	0.0	0.0
3.61	2296.70	10.50	0.20	0.0	0.0	0.0	0.0	0.0	0.0	0.0
3.42	508.27	10.50	0.55	0.0	0.0	0.0	0.0	0.0	0.0	0.0
3.33	1136.14	10.50	0.55	0.0	0.0	0.0	0.0	0.0	0.0	0.0
3.30	1236.07	10.50	0.55	0.0	0.0	0.0	0.0	0.0	0.0	0.0
3.28	1.208e+04	10.50	4.24	0.0	-0.13	20.25	5.20	1.6217e-04	6.243	12.893
3.19	3911.44	10.50	0.55	0.0	0.0	10.50	0.55	1.556	0.0	0.0
2.88	4.235e+04	10.50	4.00	0.0	-0.13	9.94	5.20	0.041	0.093	1.010
2.58	8876.25	10.50	4.24	0.0	-0.13	9.94	5.20	0.041	0.093	0.807
2.27	8876.25	10.50	4.24	0.0	-0.13	9.94	5.20	0.041	0.093	0.807
1.98	4.075e+04	10.50	3.99	0.0	-0.13	9.94	5.20	0.041	0.093	1.018
1.68	8876.25	10.50	4.24	0.0	-0.13	9.94	5.20	0.041	0.093	0.807
1.38	8876.25	10.50	4.24	0.0	-0.13	9.94	5.20	0.041	0.093	0.807
1.07	4.161e+04	10.50	4.00	0.0	-0.13	9.94	5.20	0.041	0.093	1.014
0.72	1.060e+04	10.50	4.24	0.0	-0.13	10.50	5.20	0.035	0.0	0.875
0.36	1.060e+04	10.50	4.24	0.0	-0.13	10.50	5.20	0.035	0.0	0.875
1.00e-05	548.26	13.00	3.92	0.0	-0.08	0.0	0.0	0.0	0.0	0.0
Risulta	2.859e+05									

Modo	Frequenza	Periodo	Acc. Spettrale	M efficace X x g	%	M efficace Y x g	%	M efficace Z x g	%	Energia	Energia x v
	Hz	sec	g	daN		daN		daN			
1	3.596	0.278	0.166	1.15e-03	0.0	1.796e+05	62.8	2.988e+04	10.5	0.0	0.0
2	5.574	0.179	0.166	7.504e+04	26.2	0.11	4.02e-05	0.36	1.26e-04	0.0	0.0
3	7.019	0.142	0.164	98.90	3.46e-02	806.87	0.3	1.471e+04	5.1	0.0	0.0
4	7.374	0.136	0.159	8.61	3.01e-03	2.162e+04	7.6	2.410e+05	84.3	0.0	0.0
5	10.002	0.100	0.133	968.66	0.3	1.81	6.33e-04	10.19	3.56e-03	0.0	0.0
6	11.271	0.089	0.125	13.72	4.80e-03	30.37	1.06e-02	222.22	7.77e-02	0.0	0.0

Modo	Frequenza	Periodo	Acc. Spettrale	M efficace X x g	%	M efficace Y x g	%	M efficace Z x g	%	Energia	Energia x v
7	20.894	0.048	0.096	2.019e+05	70.6	4.64	1.62e-03	0.0	0.0	0.0	0.0
8	22.714	0.044	0.094	95.88	3.35e-02	1.715e+04	6.0	20.50	7.17e-03	0.0	0.0
9	36.518	0.027	0.082	7.12	2.49e-03	5.667e+04	19.8	70.95	2.48e-02	0.0	0.0
Risulta				2.782e+05		2.758e+05		2.859e+05			
In percentuale				97.28		96.47		99.98			

CDC	Tipo	Sigla Id	Note
13	Edk	CDC=Ed (dinamico SLD) alfa=0.0 (ecc. -)	
			categoria suolo: C
			fattore di sito S = 1.500
			ordinata spettro (tratto Tb-Tc) = 0.166 g
			angolo di ingresso:0.0
			eccentricità aggiuntiva: negativa
			periodo proprio T1: 0.048 sec.
			numero di modi considerati: 9
			combinaz. modale: CQC

Quota	M Sismica x g	Pos. GX	Pos. GY	E agg. X-X	E agg. Y-Y	Pos. KX	Pos. KY	(r/Ls)^2	rapp. ex/rx	rapp. ey/ry
m	daN	m	m	m	m	m	m			
4.13	1968.83	10.50	5.50	0.0	0.0	0.0	0.0	0.0	0.0	0.0
4.10	7281.30	10.50	5.20	0.0	0.0	0.0	0.0	0.0	0.0	0.0
4.05	7479.57	10.50	4.69	0.0	0.0	0.0	0.0	0.0	0.0	0.0
4.00	7367.41	10.50	4.18	0.0	0.0	0.0	0.0	0.0	0.0	0.0
3.95	7255.24	10.50	3.67	0.0	0.0	0.0	0.0	0.0	0.0	0.0
3.90	7143.07	10.50	3.16	0.0	0.0	0.0	0.0	0.0	0.0	0.0
3.84	3861.17	10.50	2.65	0.0	0.0	0.0	0.0	0.0	0.0	0.0
3.84	3678.65	10.50	2.60	0.0	0.0	0.0	0.0	0.0	0.0	0.0
3.79	6693.71	10.50	2.09	0.0	0.0	0.0	0.0	0.0	0.0	0.0
3.74	6693.40	10.50	1.58	0.0	0.0	0.0	0.0	0.0	0.0	0.0
3.69	1.066e+04	10.50	4.34	0.0	0.13	20.25	5.20	1.6217e-04	6.243	11.534
3.69	6756.45	10.50	1.07	0.0	0.0	0.0	0.0	0.0	0.0	0.0
3.64	5959.57	10.50	0.55	0.0	0.0	10.50	0.55	1.467	0.0	0.0
3.61	2296.70	10.50	0.20	0.0	0.0	0.0	0.0	0.0	0.0	0.0
3.42	508.27	10.50	0.55	0.0	0.0	0.0	0.0	0.0	0.0	0.0
3.33	1136.14	10.50	0.55	0.0	0.0	0.0	0.0	0.0	0.0	0.0
3.30	1236.07	10.50	0.55	0.0	0.0	0.0	0.0	0.0	0.0	0.0
3.28	1.208e+04	10.50	4.24	0.0	0.13	20.25	5.20	1.6217e-04	6.243	12.893
3.19	3911.44	10.50	0.55	0.0	0.0	10.50	0.55	1.556	0.0	0.0
2.88	4.235e+04	10.50	4.00	0.0	0.13	9.94	5.20	0.041	0.093	1.010
2.58	8876.25	10.50	4.24	0.0	0.13	9.94	5.20	0.041	0.093	0.807
2.27	8876.25	10.50	4.24	0.0	0.13	9.94	5.20	0.041	0.093	0.807
1.98	4.075e+04	10.50	3.99	0.0	0.13	9.94	5.20	0.041	0.093	1.018
1.68	8876.25	10.50	4.24	0.0	0.13	9.94	5.20	0.041	0.093	0.807
1.38	8876.25	10.50	4.24	0.0	0.13	9.94	5.20	0.041	0.093	0.807
1.07	4.161e+04	10.50	4.00	0.0	0.13	9.94	5.20	0.041	0.093	1.014
0.72	1.060e+04	10.50	4.24	0.0	0.13	10.50	5.20	0.035	0.0	0.875
0.36	1.060e+04	10.50	4.24	0.0	0.13	10.50	5.20	0.035	0.0	0.875
1.00e-05	548.26	13.00	3.92	0.0	0.08	0.0	0.0	0.0	0.0	0.0
Risulta	2.859e+05									

Modo	Frequenza	Periodo	Acc. Spettrale	M efficace X x g	%	M efficace Y x g	%	M efficace Z x g	%	Energia	Energia x v
	Hz	sec	g	daN		daN		daN			
1	3.596	0.278	0.166	1.11e-03	0.0	1.796e+05	62.8	2.988e+04	10.5	0.0	0.0
2	5.601	0.179	0.166	7.259e+04	25.4	0.12	4.11e-05	0.36	1.27e-04	0.0	0.0
3	7.019	0.142	0.164	103.52	3.62e-02	804.38	0.3	1.468e+04	5.1	0.0	0.0
4	7.374	0.136	0.159	9.05	3.17e-03	2.162e+04	7.6	2.410e+05	84.3	0.0	0.0
5	9.801	0.102	0.135	850.17	0.3	3.43	1.20e-03	14.75	5.16e-03	0.0	0.0
6	11.291	0.089	0.125	15.13	5.29e-03	28.94	1.01e-02	219.55	7.68e-02	0.0	0.0
7	20.701	0.048	0.097	2.043e+05	71.4	0.04	1.48e-05	5.49e-03	1.92e-06	0.0	0.0
8	22.737	0.044	0.094	0.14	4.86e-05	1.728e+04	6.0	20.42	7.14e-03	0.0	0.0
9	36.565	0.027	0.082	0.09	3.01e-05	5.658e+04	19.8	71.20	2.49e-02	0.0	0.0
Risulta				2.778e+05		2.759e+05		2.859e+05			
In percentuale				97.17		96.48		99.98			

CDC	Tipo	Sigla Id	Note
14	Edk	CDC=Ed (dinamico SLD) alfa=90.00 (ecc. +)	
			categoria suolo: C
			fattore di sito S = 1.500
			ordinata spettro (tratto Tb-Tc) = 0.166 g
			angolo di ingresso:90.00
			eccentricità aggiuntiva: positiva
			periodo proprio T1: 0.279 sec.
			numero di modi considerati: 9
			combinaz. modale: CQC

Quota	M Sismica x g	Pos. GX	Pos. GY	E agg. X-X	E agg. Y-Y	Pos. KX	Pos. KY	(r/Ls)^2	rapp. ex/rx	rapp. ey/ry
m	daN	m	m	m	m	m	m			
4.13	1968.83	10.50	5.50	1.03	0.0	0.0	0.0	0.0	0.0	0.0
4.10	7281.30	10.50	5.20	1.03	0.0	0.0	0.0	0.0	0.0	0.0
4.05	7479.57	10.50	4.69	1.03	0.0	0.0	0.0	0.0	0.0	0.0
4.00	7367.41	10.50	4.18	1.03	0.0	0.0	0.0	0.0	0.0	0.0
3.95	7255.24	10.50	3.67	1.03	0.0	0.0	0.0	0.0	0.0	0.0
3.90	7143.07	10.50	3.16	1.03	0.0	0.0	0.0	0.0	0.0	0.0
3.84	3861.17	10.50	2.65	1.03	0.0	0.0	0.0	0.0	0.0	0.0
3.84	3678.65	10.50	2.60	1.03	0.0	0.0	0.0	0.0	0.0	0.0
3.79	6693.71	10.50	2.09	1.03	0.0	0.0	0.0	0.0	0.0	0.0
3.74	6693.40	10.50	1.58	1.03	0.0	0.0	0.0	0.0	0.0	0.0
3.69	1.066e+04	10.50	4.34	1.00	0.0	20.25	5.20	1.6217e-04	6.243	11.534
3.69	6756.45	10.50	1.07	1.03	0.0	0.0	0.0	0.0	0.0	0.0
3.64	5959.57	10.50	0.55	1.03	0.0	10.50	0.55	1.467	0.0	0.0
3.61	2296.70	10.50	0.20	1.03	0.0	0.0	0.0	0.0	0.0	0.0
3.42	508.27	10.50	0.55	0.77	0.0	0.0	0.0	0.0	0.0	0.0
3.33	1136.14	10.50	0.55	0.86	0.0	0.0	0.0	0.0	0.0	0.0
3.30	1236.07	10.50	0.55	0.41	0.0	0.0	0.0	0.0	0.0	0.0
3.28	1.208e+04	10.50	4.24	1.00	0.0	20.25	5.20	1.6217e-04	6.243	12.893
3.19	3911.44	10.50	0.55	1.00	0.0	10.50	0.55	1.556	0.0	0.0
2.88	4.235e+04	10.50	4.00	1.00	0.0	9.94	5.20	0.041	0.093	1.010
2.58	8876.25	10.50	4.24	1.00	0.0	9.94	5.20	0.041	0.093	0.807
2.27	8876.25	10.50	4.24	1.00	0.0	9.94	5.20	0.041	0.093	0.807
1.98	4.075e+04	10.50	3.99	1.00	0.0	9.94	5.20	0.041	0.093	1.018
1.68	8876.25	10.50	4.24	1.00	0.0	9.94	5.20	0.041	0.093	0.807
1.38	8876.25	10.50	4.24	1.00	0.0	9.94	5.20	0.041	0.093	0.807
1.07	4.161e+04	10.50	4.00	1.00	0.0	9.94	5.20	0.041	0.093	1.014
0.72	1.060e+04	10.50	4.24	1.00	0.0	10.50	5.20	0.035	0.0	0.875
0.36	1.060e+04	10.50	4.24	1.00	0.0	10.50	5.20	0.035	0.0	0.875
1.00e-05	548.26	13.00	3.92	0.77	0.0	0.0	0.0	0.0	0.0	0.0
Risulta	2.859e+05									

Modo	Frequenza	Periodo	Acc. Spettrale	M efficace X x g	%	M efficace Y x g	%	M efficace Z x g	%	Energia	Energia x v
	Hz	sec	g	daN		daN		daN			
1	3.585	0.279	0.166	142.79	4.99e-02	1.798e+05	62.9	2.934e+04	10.3	0.0	0.0
2	5.606	0.178	0.166	7.388e+04	25.8	31.71	1.11e-02	1207.32	0.4	0.0	0.0
3	6.752	0.148	0.166	121.92	4.26e-02	230.36	8.06e-02	7188.04	2.5	0.0	0.0
4	7.363	0.136	0.159	182.79	6.39e-02	2.194e+04	7.7	2.462e+05	86.1	0.0	0.0
5	8.925	0.112	0.142	27.81	9.72e-03	95.31	3.33e-02	1750.99	0.6	0.0	0.0
6	9.762	0.102	0.135	713.01	0.2	17.30	6.05e-03	15.33	5.36e-03	0.0	0.0
7	12.837	0.078	0.118	595.31	0.2	136.99	4.79e-02	62.89	2.20e-02	0.0	0.0
8	20.835	0.048	0.096	2.020e+05	70.6	257.15	8.99e-02	2.99	1.04e-03	0.0	0.0
9	28.754	0.035	0.087	596.58	0.2	6.168e+04	21.6	79.93	2.80e-02	0.0	0.0
Risulta				2.782e+05		2.642e+05		2.859e+05			
In percentuale				97.30		92.41		99.98			

CDC	Tipo	Sigla Id	Note
15	Edk	CDC=Ed (dinamico SLD) alfa=90.00 (ecc. -)	
			categoria suolo: C
			fattore di sito S = 1.500
			ordinata spettro (tratto Tb-Tc) = 0.166 g
			angolo di ingresso:90.00
			eccentricità aggiuntiva: negativa
			periodo proprio T1: 0.279 sec.
			numero di modi considerati: 9
			combinaz. modale: CQC

Quota	M Sismica x g	Pos. GX	Pos. GY	E agg. X-X	E agg. Y-Y	Pos. KX	Pos. KY	(r/Ls)^2	rapp. ex/rx	rapp. ey/ry
m	daN	m	m	m	m	m	m			
4.13	1968.83	10.50	5.50	-1.03	0.0	0.0	0.0	0.0	0.0	0.0
4.10	7281.30	10.50	5.20	-1.03	0.0	0.0	0.0	0.0	0.0	0.0
4.05	7479.57	10.50	4.69	-1.03	0.0	0.0	0.0	0.0	0.0	0.0
4.00	7367.41	10.50	4.18	-1.03	0.0	0.0	0.0	0.0	0.0	0.0
3.95	7255.24	10.50	3.67	-1.03	0.0	0.0	0.0	0.0	0.0	0.0
3.90	7143.07	10.50	3.16	-1.03	0.0	0.0	0.0	0.0	0.0	0.0
3.84	3861.17	10.50	2.65	-1.03	0.0	0.0	0.0	0.0	0.0	0.0
3.84	3678.65	10.50	2.60	-1.03	0.0	0.0	0.0	0.0	0.0	0.0
3.79	6693.71	10.50	2.09	-1.03	0.0	0.0	0.0	0.0	0.0	0.0
3.74	6693.40	10.50	1.58	-1.03	0.0	0.0	0.0	0.0	0.0	0.0
3.69	1.066e+04	10.50	4.34	-1.00	0.0	20.25	5.20	1.6217e-04	6.243	11.534
3.69	6756.45	10.50	1.07	-1.03	0.0	0.0	0.0	0.0	0.0	0.0
3.64	5959.57	10.50	0.55	-1.03	0.0	10.50	0.55	1.467	0.0	0.0
3.61	2296.70	10.50	0.20	-1.03	0.0	0.0	0.0	0.0	0.0	0.0
3.42	508.27	10.50	0.55	-0.77	0.0	0.0	0.0	0.0	0.0	0.0
3.33	1136.14	10.50	0.55	-0.86	0.0	0.0	0.0	0.0	0.0	0.0
3.30	1236.07	10.50	0.55	-0.41	0.0	0.0	0.0	0.0	0.0	0.0
3.28	1.208e+04	10.50	4.24	-1.00	0.0	20.25	5.20	1.6217e-04	6.243	12.893
3.19	3911.44	10.50	0.55	-1.00	0.0	10.50	0.55	1.556	0.0	0.0
2.88	4.235e+04	10.50	4.00	-1.00	0.0	9.94	5.20	0.041	0.093	1.010
2.58	8876.25	10.50	4.24	-1.00	0.0	9.94	5.20	0.041	0.093	0.807
2.27	8876.25	10.50	4.24	-1.00	0.0	9.94	5.20	0.041	0.093	0.807
1.98	4.075e+04	10.50	3.99	-1.00	0.0	9.94	5.20	0.041	0.093	1.018
1.68	8876.25	10.50	4.24	-1.00	0.0	9.94	5.20	0.041	0.093	0.807
1.38	8876.25	10.50	4.24	-1.00	0.0	9.94	5.20	0.041	0.093	0.807
1.07	4.161e+04	10.50	4.00	-1.00	0.0	9.94	5.20	0.041	0.093	1.014
0.72	1.060e+04	10.50	4.24	-1.00	0.0	10.50	5.20	0.035	0.0	0.875
0.36	1.060e+04	10.50	4.24	-1.00	0.0	10.50	5.20	0.035	0.0	0.875
1.00e-05	548.26	13.00	3.92	-0.77	0.0	0.0	0.0	0.0	0.0	0.0
Risulta	2.859e+05									

Modo	Frequenza	Periodo	Acc. Spettrale	M efficace X x g	%	M efficace Y x g	%	M efficace Z x g	%	Energia	Energia x v
	Hz	sec	g	daN		daN		daN			
1	3.586	0.279	0.166	141.56	4.95e-02	1.799e+05	62.9	2.936e+04	10.3	0.0	0.0
2	5.606	0.178	0.166	7.385e+04	25.8	24.86	8.69e-03	1300.77	0.5	0.0	0.0
3	7.323	0.137	0.159	194.50	6.80e-02	2.066e+04	7.2	2.415e+05	84.5	0.0	0.0
4	7.908	0.126	0.152	207.86	7.27e-02	1586.43	0.6	1.285e+04	4.5	0.0	0.0
5	8.849	0.113	0.143	314.44	0.1	29.09	1.02e-02	581.61	0.2	0.0	0.0
6	10.209	0.098	0.132	448.52	0.2	41.50	1.45e-02	46.52	1.63e-02	0.0	0.0
7	12.733	0.079	0.118	132.65	4.64e-02	32.50	1.14e-02	126.52	4.42e-02	0.0	0.0
8	20.787	0.048	0.097	2.017e+05	70.5	348.88	0.1	3.43	1.20e-03	0.0	0.0
9	28.893	0.035	0.087	972.45	0.3	6.214e+04	21.7	73.51	2.57e-02	0.0	0.0
Risulta				2.780e+05		2.647e+05		2.859e+05			
In percentuale				97.21		92.58		99.97			

CDC	Tipo	Sigla Id	Note
16	Edk	CDC=Ed (dinamico SLU) alfa=0.0 (ecc. +)	
			categoria suolo: C
			fattore di sito S = 1.500
			ordinata spettro (tratto Tb-Tc) = 0.213 g
			angolo di ingresso:0.0
			eccentricità aggiuntiva: positiva
			periodo proprio T1: 0.048 sec.
			fattore q: 1.500
			fattore per spost. mu d: 3.500
			classe di duttilità CD: B
			numero di modi considerati: 9
			combinaz. modale: CQC

Quota	M Sismica x g	Pos. GX	Pos. GY	E agg. X-X	E agg. Y-Y	Pos. KX	Pos. KY	(r/Ls)^2	rapp. ex/rx	rapp. ey/ry
m	daN	m	m	m	m	m	m			
4.13	1968.83	10.50	5.50	0.0	0.0	0.0	0.0	0.0	0.0	0.0
4.10	7281.30	10.50	5.20	0.0	0.0	0.0	0.0	0.0	0.0	0.0
4.05	7479.57	10.50	4.69	0.0	0.0	0.0	0.0	0.0	0.0	0.0
4.00	7367.41	10.50	4.18	0.0	0.0	0.0	0.0	0.0	0.0	0.0

Quota	M Sismica x g	Pos. GX	Pos. GY	E agg. X-X	E agg. Y-Y	Pos. KX	Pos. KY	(r/Ls)^2	rapp. ex/rx	rapp. ey/ry
3.95	7255.24	10.50	3.67	0.0	0.0	0.0	0.0	0.0	0.0	0.0
3.90	7143.07	10.50	3.16	0.0	0.0	0.0	0.0	0.0	0.0	0.0
3.84	3861.17	10.50	2.65	0.0	0.0	0.0	0.0	0.0	0.0	0.0
3.84	3678.65	10.50	2.60	0.0	0.0	0.0	0.0	0.0	0.0	0.0
3.79	6693.71	10.50	2.09	0.0	0.0	0.0	0.0	0.0	0.0	0.0
3.74	6693.40	10.50	1.58	0.0	0.0	0.0	0.0	0.0	0.0	0.0
3.69	1.066e+04	10.50	4.34	0.0	-0.13	20.25	5.20	1.6217e-04	6.243	11.534
3.69	6756.45	10.50	1.07	0.0	0.0	0.0	0.0	0.0	0.0	0.0
3.64	5959.57	10.50	0.55	0.0	0.0	10.50	0.55	1.467	0.0	0.0
3.61	2296.70	10.50	0.20	0.0	0.0	0.0	0.0	0.0	0.0	0.0
3.42	508.27	10.50	0.55	0.0	0.0	0.0	0.0	0.0	0.0	0.0
3.33	1136.14	10.50	0.55	0.0	0.0	0.0	0.0	0.0	0.0	0.0
3.30	1236.07	10.50	0.55	0.0	0.0	0.0	0.0	0.0	0.0	0.0
3.28	1.208e+04	10.50	4.24	0.0	-0.13	20.25	5.20	1.6217e-04	6.243	12.893
3.19	3911.44	10.50	0.55	0.0	0.0	10.50	0.55	1.556	0.0	0.0
2.88	4.235e+04	10.50	4.00	0.0	-0.13	9.94	5.20	0.041	0.093	1.010
2.58	8876.25	10.50	4.24	0.0	-0.13	9.94	5.20	0.041	0.093	0.807
2.27	8876.25	10.50	4.24	0.0	-0.13	9.94	5.20	0.041	0.093	0.807
1.98	4.075e+04	10.50	3.99	0.0	-0.13	9.94	5.20	0.041	0.093	1.018
1.68	8876.25	10.50	4.24	0.0	-0.13	9.94	5.20	0.041	0.093	0.807
1.38	8876.25	10.50	4.24	0.0	-0.13	9.94	5.20	0.041	0.093	0.807
1.07	4.161e+04	10.50	4.00	0.0	-0.13	9.94	5.20	0.041	0.093	1.014
0.72	1.060e+04	10.50	4.24	0.0	-0.13	10.50	5.20	0.035	0.0	0.875
0.36	1.060e+04	10.50	4.24	0.0	-0.13	10.50	5.20	0.035	0.0	0.875
1.00e-05	548.26	13.00	3.92	0.0	-0.08	0.0	0.0	0.0	0.0	0.0
Risulta	2.859e+05									

Modo	Frequenza	Periodo	Acc. Spettrale	M efficace X x g	%	M efficace Y x g	%	M efficace Z x g	%	Energia	Energia x v
	Hz	sec	g	daN		daN		daN			
1	3.596	0.278	0.213	1.15e-03	0.0	1.796e+05	62.8	2.988e+04	10.5	0.0	0.0
2	5.574	0.179	0.213	7.504e+04	26.2	0.11	4.02e-05	0.36	1.26e-04	0.0	0.0
3	7.019	0.142	0.197	98.90	3.46e-02	806.87	0.3	1.471e+04	5.1	0.0	0.0
4	7.374	0.136	0.192	8.61	3.01e-03	2.162e+04	7.6	2.410e+05	84.3	0.0	0.0
5	10.002	0.100	0.171	968.66	0.3	1.81	6.33e-04	10.19	3.56e-03	0.0	0.0
6	11.271	0.089	0.164	13.72	4.80e-03	30.37	1.06e-02	222.22	7.77e-02	0.0	0.0
7	20.894	0.048	0.139	2.019e+05	70.6	4.64	1.62e-03	0.0	0.0	0.0	0.0
8	22.714	0.044	0.137	95.88	3.35e-02	1.715e+04	6.0	20.50	7.17e-03	0.0	0.0
9	36.518	0.027	0.127	7.12	2.49e-03	5.667e+04	19.8	70.95	2.48e-02	0.0	0.0
Risulta				2.782e+05		2.758e+05		2.859e+05			
In percentuale				97.28		96.47		99.98			

CDC	Tipo	Sigla Id	Note
17	Edk	CDC=Ed (dinamico SLU) alfa=0.0 (ecc. -)	
			categoria suolo: C
			fattore di sito S = 1.500
			ordinata spettro (tratto Tb-Tc) = 0.213 g
			angolo di ingresso:0.0
			eccentricità aggiuntiva: negativa
			periodo proprio T1: 0.048 sec.
			fattore q: 1.500
			fattore per spost. mu d: 3.500
			classe di duttilità CD: B
			numero di modi considerati: 9
			combinaz. modale: CQC

Quota	M Sismica x g	Pos. GX	Pos. GY	E agg. X-X	E agg. Y-Y	Pos. KX	Pos. KY	(r/Ls)^2	rapp. ex/rx	rapp. ey/ry
m	daN	m	m	m	m	m	m			
4.13	1968.83	10.50	5.50	0.0	0.0	0.0	0.0	0.0	0.0	0.0
4.10	7281.30	10.50	5.20	0.0	0.0	0.0	0.0	0.0	0.0	0.0
4.05	7479.57	10.50	4.69	0.0	0.0	0.0	0.0	0.0	0.0	0.0
4.00	7367.41	10.50	4.18	0.0	0.0	0.0	0.0	0.0	0.0	0.0
3.95	7255.24	10.50	3.67	0.0	0.0	0.0	0.0	0.0	0.0	0.0
3.90	7143.07	10.50	3.16	0.0	0.0	0.0	0.0	0.0	0.0	0.0
3.84	3861.17	10.50	2.65	0.0	0.0	0.0	0.0	0.0	0.0	0.0
3.84	3678.65	10.50	2.60	0.0	0.0	0.0	0.0	0.0	0.0	0.0
3.79	6693.71	10.50	2.09	0.0	0.0	0.0	0.0	0.0	0.0	0.0
3.74	6693.40	10.50	1.58	0.0	0.0	0.0	0.0	0.0	0.0	0.0
3.69	1.066e+04	10.50	4.34	0.0	0.13	20.25	5.20	1.6217e-04	6.243	11.534
3.69	6756.45	10.50	1.07	0.0	0.0	0.0	0.0	0.0	0.0	0.0

Quota	M Sismica x g	Pos. GX	Pos. GY	E agg. X-X	E agg. Y-Y	Pos. KX	Pos. KY	(r/Ls)^2	rapp. ex/rx	rapp. ey/ry
3.64	5959.57	10.50	0.55	0.0	0.0	10.50	0.55	1.467	0.0	0.0
3.61	2296.70	10.50	0.20	0.0	0.0	0.0	0.0	0.0	0.0	0.0
3.42	508.27	10.50	0.55	0.0	0.0	0.0	0.0	0.0	0.0	0.0
3.33	1136.14	10.50	0.55	0.0	0.0	0.0	0.0	0.0	0.0	0.0
3.30	1236.07	10.50	0.55	0.0	0.0	0.0	0.0	0.0	0.0	0.0
3.28	1.208e+04	10.50	4.24	0.0	0.13	20.25	5.20	1.6217e-04	6.243	12.893
3.19	3911.44	10.50	0.55	0.0	0.0	10.50	0.55	1.556	0.0	0.0
2.88	4.235e+04	10.50	4.00	0.0	0.13	9.94	5.20	0.041	0.093	1.010
2.58	8876.25	10.50	4.24	0.0	0.13	9.94	5.20	0.041	0.093	0.807
2.27	8876.25	10.50	4.24	0.0	0.13	9.94	5.20	0.041	0.093	0.807
1.98	4.075e+04	10.50	3.99	0.0	0.13	9.94	5.20	0.041	0.093	1.018
1.68	8876.25	10.50	4.24	0.0	0.13	9.94	5.20	0.041	0.093	0.807
1.38	8876.25	10.50	4.24	0.0	0.13	9.94	5.20	0.041	0.093	0.807
1.07	4.161e+04	10.50	4.00	0.0	0.13	9.94	5.20	0.041	0.093	1.014
0.72	1.060e+04	10.50	4.24	0.0	0.13	10.50	5.20	0.035	0.0	0.875
0.36	1.060e+04	10.50	4.24	0.0	0.13	10.50	5.20	0.035	0.0	0.875
1.00e-05	548.26	13.00	3.92	0.0	0.08	0.0	0.0	0.0	0.0	0.0
Risulta	2.859e+05									

Modo	Frequenza	Periodo	Acc. Spettrale	M efficace X x g	%	M efficace Y x g	%	M efficace Z x g	%	Energia	Energia x v
	Hz	sec	g	daN		daN		daN			
1	3.596	0.278	0.213	1.11e-03	0.0	1.796e+05	62.8	2.988e+04	10.5	0.0	0.0
2	5.601	0.179	0.213	7.259e+04	25.4	0.12	4.11e-05	0.36	1.27e-04	0.0	0.0
3	7.019	0.142	0.197	103.52	3.62e-02	804.38	0.3	1.468e+04	5.1	0.0	0.0
4	7.374	0.136	0.192	9.05	3.17e-03	2.162e+04	7.6	2.410e+05	84.3	0.0	0.0
5	9.801	0.102	0.172	850.17	0.3	3.43	1.20e-03	14.75	5.16e-03	0.0	0.0
6	11.291	0.089	0.164	15.13	5.29e-03	28.94	1.01e-02	219.55	7.68e-02	0.0	0.0
7	20.701	0.048	0.139	2.043e+05	71.4	0.04	1.48e-05	5.49e-03	1.92e-06	0.0	0.0
8	22.737	0.044	0.137	0.14	4.86e-05	1.728e+04	6.0	20.42	7.14e-03	0.0	0.0
9	36.565	0.027	0.127	0.09	3.01e-05	5.658e+04	19.8	71.20	2.49e-02	0.0	0.0
Risulta				2.778e+05		2.759e+05		2.859e+05			
In percentuale				97.17		96.48		99.98			

CDC	Tipo	Sigla Id	Note
18	Edk	CDC=Ed (dinamico SLU) alfa=90.00 (ecc. +)	
			categoria suolo: C
			fattore di sito S = 1.500
			ordinata spettro (tratto Tb-Tc) = 0.213 g
			angolo di ingresso:90.00
			eccentricità aggiuntiva: positiva
			periodo proprio T1: 0.279 sec.
			fattore q: 1.500
			fattore per spost. mu d: 1.914
			classe di duttilità CD: B
			numero di modi considerati: 9
			combinaz. modale: CQC

Quota	M Sismica x g	Pos. GX	Pos. GY	E agg. X-X	E agg. Y-Y	Pos. KX	Pos. KY	(r/Ls)^2	rapp. ex/rx	rapp. ey/ry
m	daN	m	m	m	m	m	m			
4.13	1968.83	10.50	5.50	1.03	0.0	0.0	0.0	0.0	0.0	0.0
4.10	7281.30	10.50	5.20	1.03	0.0	0.0	0.0	0.0	0.0	0.0
4.05	7479.57	10.50	4.69	1.03	0.0	0.0	0.0	0.0	0.0	0.0
4.00	7367.41	10.50	4.18	1.03	0.0	0.0	0.0	0.0	0.0	0.0
3.95	7255.24	10.50	3.67	1.03	0.0	0.0	0.0	0.0	0.0	0.0
3.90	7143.07	10.50	3.16	1.03	0.0	0.0	0.0	0.0	0.0	0.0
3.84	3861.17	10.50	2.65	1.03	0.0	0.0	0.0	0.0	0.0	0.0
3.84	3678.65	10.50	2.60	1.03	0.0	0.0	0.0	0.0	0.0	0.0
3.79	6693.71	10.50	2.09	1.03	0.0	0.0	0.0	0.0	0.0	0.0
3.74	6693.40	10.50	1.58	1.03	0.0	0.0	0.0	0.0	0.0	0.0
3.69	1.066e+04	10.50	4.34	1.00	0.0	20.25	5.20	1.6217e-04	6.243	11.534
3.69	6756.45	10.50	1.07	1.03	0.0	0.0	0.0	0.0	0.0	0.0
3.64	5959.57	10.50	0.55	1.03	0.0	10.50	0.55	1.467	0.0	0.0
3.61	2296.70	10.50	0.20	1.03	0.0	0.0	0.0	0.0	0.0	0.0
3.42	508.27	10.50	0.55	0.77	0.0	0.0	0.0	0.0	0.0	0.0
3.33	1136.14	10.50	0.55	0.86	0.0	0.0	0.0	0.0	0.0	0.0
3.30	1236.07	10.50	0.55	0.41	0.0	0.0	0.0	0.0	0.0	0.0
3.28	1.208e+04	10.50	4.24	1.00	0.0	20.25	5.20	1.6217e-04	6.243	12.893
3.19	3911.44	10.50	0.55	1.00	0.0	10.50	0.55	1.556	0.0	0.0
2.88	4.235e+04	10.50	4.00	1.00	0.0	9.94	5.20	0.041	0.093	1.010

Quota	M Sismica x g	Pos. GX	Pos. GY	E agg. X-X	E agg. Y-Y	Pos. KX	Pos. KY	(r/Ls)^2	rapp. ex/rx	rapp. ey/ry
2.58	8876.25	10.50	4.24	1.00	0.0	9.94	5.20	0.041	0.093	0.807
2.27	8876.25	10.50	4.24	1.00	0.0	9.94	5.20	0.041	0.093	0.807
1.98	4.075e+04	10.50	3.99	1.00	0.0	9.94	5.20	0.041	0.093	1.018
1.68	8876.25	10.50	4.24	1.00	0.0	9.94	5.20	0.041	0.093	0.807
1.38	8876.25	10.50	4.24	1.00	0.0	9.94	5.20	0.041	0.093	0.807
1.07	4.161e+04	10.50	4.00	1.00	0.0	9.94	5.20	0.041	0.093	1.014
0.72	1.060e+04	10.50	4.24	1.00	0.0	10.50	5.20	0.035	0.0	0.875
0.36	1.060e+04	10.50	4.24	1.00	0.0	10.50	5.20	0.035	0.0	0.875
1.00e-05	548.26	13.00	3.92	0.77	0.0	0.0	0.0	0.0	0.0	0.0
Risulta	2.859e+05									

Modo	Frequenza	Periodo	Acc. Spettrale	M efficace X x g	%	M efficace Y x g	%	M efficace Z x g	%	Energia	Energia x v
	Hz	sec	g	daN		daN		daN			
1	3.585	0.279	0.213	142.79	4.99e-02	1.798e+05	62.9	2.934e+04	10.3	0.0	0.0
2	5.606	0.178	0.213	7.388e+04	25.8	31.71	1.11e-02	1207.32	0.4	0.0	0.0
3	6.752	0.148	0.200	121.92	4.26e-02	230.36	8.06e-02	7188.04	2.5	0.0	0.0
4	7.363	0.136	0.193	182.79	6.39e-02	2.194e+04	7.7	2.462e+05	86.1	0.0	0.0
5	8.925	0.112	0.178	27.81	9.72e-03	95.31	3.33e-02	1750.99	0.6	0.0	0.0
6	9.762	0.102	0.172	713.01	0.2	17.30	6.05e-03	15.33	5.36e-03	0.0	0.0
7	12.837	0.078	0.157	595.31	0.2	136.99	4.79e-02	62.89	2.20e-02	0.0	0.0
8	20.835	0.048	0.139	2.020e+05	70.6	257.15	8.99e-02	2.99	1.04e-03	0.0	0.0
9	28.754	0.035	0.131	596.58	0.2	6.168e+04	21.6	79.93	2.80e-02	0.0	0.0
Risulta				2.782e+05		2.642e+05		2.859e+05			
In percentuale				97.30		92.41		99.98			

CDC	Tipo	Sigla Id	Note
19	Edk	CDC=Ed (dinamico SLU) alfa=90.00 (ecc. -)	
			categoria suolo: C
			fattore di sito S = 1.500
			ordinata spettro (tratto Tb-Tc) = 0.213 g
			angolo di ingresso:90.00
			eccentricità aggiuntiva: negativa
			periodo proprio T1: 0.279 sec.
			fattore q: 1.500
			fattore per spost. mu d: 1.914
			classe di duttilità CD: B
			numero di modi considerati: 9
			combinaz. modale: CQC

Quota	M Sismica x g	Pos. GX	Pos. GY	E agg. X-X	E agg. Y-Y	Pos. KX	Pos. KY	(r/Ls)^2	rapp. ex/rx	rapp. ey/ry
m	daN	m	m	m	m	m	m			
4.13	1968.83	10.50	5.50	-1.03	0.0	0.0	0.0	0.0	0.0	0.0
4.10	7281.30	10.50	5.20	-1.03	0.0	0.0	0.0	0.0	0.0	0.0
4.05	7479.57	10.50	4.69	-1.03	0.0	0.0	0.0	0.0	0.0	0.0
4.00	7367.41	10.50	4.18	-1.03	0.0	0.0	0.0	0.0	0.0	0.0
3.95	7255.24	10.50	3.67	-1.03	0.0	0.0	0.0	0.0	0.0	0.0
3.90	7143.07	10.50	3.16	-1.03	0.0	0.0	0.0	0.0	0.0	0.0
3.84	3861.17	10.50	2.65	-1.03	0.0	0.0	0.0	0.0	0.0	0.0
3.84	3678.65	10.50	2.60	-1.03	0.0	0.0	0.0	0.0	0.0	0.0
3.79	6693.71	10.50	2.09	-1.03	0.0	0.0	0.0	0.0	0.0	0.0
3.74	6693.40	10.50	1.58	-1.03	0.0	0.0	0.0	0.0	0.0	0.0
3.69	1.066e+04	10.50	4.34	-1.00	0.0	20.25	5.20	1.6217e-04	6.243	11.534
3.69	6756.45	10.50	1.07	-1.03	0.0	0.0	0.0	0.0	0.0	0.0
3.64	5959.57	10.50	0.55	-1.03	0.0	10.50	0.55	1.467	0.0	0.0
3.61	2296.70	10.50	0.20	-1.03	0.0	0.0	0.0	0.0	0.0	0.0
3.42	508.27	10.50	0.55	-0.77	0.0	0.0	0.0	0.0	0.0	0.0
3.33	1136.14	10.50	0.55	-0.86	0.0	0.0	0.0	0.0	0.0	0.0
3.30	1236.07	10.50	0.55	-0.41	0.0	0.0	0.0	0.0	0.0	0.0
3.28	1.208e+04	10.50	4.24	-1.00	0.0	20.25	5.20	1.6217e-04	6.243	12.893
3.19	3911.44	10.50	0.55	-1.00	0.0	10.50	0.55	1.556	0.0	0.0
2.88	4.235e+04	10.50	4.00	-1.00	0.0	9.94	5.20	0.041	0.093	1.010
2.58	8876.25	10.50	4.24	-1.00	0.0	9.94	5.20	0.041	0.093	0.807
2.27	8876.25	10.50	4.24	-1.00	0.0	9.94	5.20	0.041	0.093	0.807
1.98	4.075e+04	10.50	3.99	-1.00	0.0	9.94	5.20	0.041	0.093	1.018
1.68	8876.25	10.50	4.24	-1.00	0.0	9.94	5.20	0.041	0.093	0.807
1.38	8876.25	10.50	4.24	-1.00	0.0	9.94	5.20	0.041	0.093	0.807
1.07	4.161e+04	10.50	4.00	-1.00	0.0	9.94	5.20	0.041	0.093	1.014
0.72	1.060e+04	10.50	4.24	-1.00	0.0	10.50	5.20	0.035	0.0	0.875
0.36	1.060e+04	10.50	4.24	-1.00	0.0	10.50	5.20	0.035	0.0	0.875

Quota	M Sismica x g	Pos. GX	Pos. GY	E agg. X-X	E agg. Y-Y	Pos. KX	Pos. KY	(r/Ls)^2	rapp. ex/rx	rapp. ey/ry
1.00e-05	548.26	13.00	3.92	-0.77	0.0	0.0	0.0	0.0	0.0	0.0
Risulta	2.859e+05									

Modo	Frequenza	Periodo	Acc. Spettrale	M efficace X x g	%	M efficace Y x g	%	M efficace Z x g	%	Energia	Energia x v
	Hz	sec	g	daN		daN		daN			
1	3.586	0.279	0.213	141.56	4.95e-02	1.799e+05	62.9	2.936e+04	10.3	0.0	0.0
2	5.606	0.178	0.213	7.385e+04	25.8	24.86	8.69e-03	1300.77	0.5	0.0	0.0
3	7.323	0.137	0.193	194.50	6.80e-02	2.066e+04	7.2	2.415e+05	84.5	0.0	0.0
4	7.908	0.126	0.187	207.86	7.27e-02	1586.43	0.6	1.285e+04	4.5	0.0	0.0
5	8.849	0.113	0.179	314.44	0.1	29.09	1.02e-02	581.61	0.2	0.0	0.0
6	10.209	0.098	0.170	448.52	0.2	41.50	1.45e-02	46.52	1.63e-02	0.0	0.0
7	12.733	0.079	0.158	132.65	4.64e-02	32.50	1.14e-02	126.52	4.42e-02	0.0	0.0
8	20.787	0.048	0.139	2.017e+05	70.5	348.88	0.1	3.43	1.20e-03	0.0	0.0
9	28.893	0.035	0.131	972.45	0.3	6.214e+04	21.7	73.51	2.57e-02	0.0	0.0
Risulta				2.780e+05		2.647e+05		2.859e+05			
In percentuale				97.21		92.58		99.97			

Cmb	Pilas.	1000 etaT/h	etaT	inter. h	Pilas.	1000 etaT/h	etaT	inter. h	Pilas.	1000 etaT/h	etaT	inter. h
			cm	cm			cm	cm			cm	cm
25	1	1.40	0.45	319.0	2	1.48	0.47	319.0	3	1.57	0.50	319.0
	4	1.68	0.54	319.0	5	1.77	0.56	319.0	22	1.46	0.07	45.0
	23	1.50	0.07	45.0	24	1.58	0.07	45.0	25	1.67	0.08	45.0
	26	1.74	0.08	45.0								
26	1	1.02	0.33	319.0	2	1.08	0.35	319.0	3	1.16	0.37	319.0
	4	1.24	0.40	319.0	5	1.31	0.42	319.0	22	1.11	0.05	45.0
	23	1.15	0.05	45.0	24	1.21	0.05	45.0	25	1.29	0.06	45.0
	26	1.34	0.06	45.0								
27	1	1.73	0.55	319.0	2	1.66	0.53	319.0	3	1.57	0.50	319.0
	4	1.49	0.48	319.0	5	1.43	0.46	319.0	22	1.71	0.08	45.0
	23	1.65	0.07	45.0	24	1.58	0.07	45.0	25	1.51	0.07	45.0
	26	1.48	0.07	45.0								
28	1	1.34	0.43	319.0	2	1.26	0.40	319.0	3	1.17	0.37	319.0
	4	1.07	0.34	319.0	5	1.00	0.32	319.0	22	1.36	0.06	45.0
	23	1.30	0.06	45.0	24	1.21	0.05	45.0	25	1.14	0.05	45.0
	26	1.09	0.05	45.0								
29	1	1.42	0.45	319.0	2	1.49	0.48	319.0	3	1.57	0.50	319.0
	4	1.66	0.53	319.0	5	1.73	0.55	319.0	22	1.48	0.07	45.0
	23	1.51	0.07	45.0	24	1.58	0.07	45.0	25	1.66	0.07	45.0
	26	1.71	0.08	45.0								
30	1	0.99	0.32	319.0	2	1.07	0.34	319.0	3	1.16	0.37	319.0
	4	1.26	0.40	319.0	5	1.35	0.43	319.0	22	1.09	0.05	45.0
	23	1.14	0.05	45.0	24	1.22	0.05	45.0	25	1.30	0.06	45.0
	26	1.36	0.06	45.0								
31	1	1.76	0.56	319.0	2	1.68	0.54	319.0	3	1.58	0.50	319.0
	4	1.48	0.47	319.0	5	1.40	0.45	319.0	22	1.74	0.08	45.0
	23	1.67	0.08	45.0	24	1.58	0.07	45.0	25	1.50	0.07	45.0
	26	1.46	0.07	45.0								
32	1	1.31	0.42	319.0	2	1.24	0.39	319.0	3	1.16	0.37	319.0
	4	1.09	0.35	319.0	5	1.02	0.33	319.0	22	1.33	0.06	45.0
	23	1.28	0.06	45.0	24	1.21	0.05	45.0	25	1.15	0.05	45.0
	26	1.11	0.05	45.0								
33	1	1.40	0.45	319.0	2	1.48	0.47	319.0	3	1.57	0.50	319.0
	4	1.68	0.54	319.0	5	1.76	0.56	319.0	22	1.46	0.07	45.0
	23	1.50	0.07	45.0	24	1.58	0.07	45.0	25	1.67	0.08	45.0
	26	1.73	0.08	45.0								
34	1	1.02	0.33	319.0	2	1.09	0.35	319.0	3	1.16	0.37	319.0
	4	1.24	0.39	319.0	5	1.30	0.42	319.0	22	1.12	0.05	45.0
	23	1.15	0.05	45.0	24	1.21	0.05	45.0	25	1.28	0.06	45.0
	26	1.33	0.06	45.0								
35	1	1.72	0.55	319.0	2	1.66	0.53	319.0	3	1.57	0.50	319.0
	4	1.49	0.48	319.0	5	1.43	0.46	319.0	22	1.71	0.08	45.0
	23	1.65	0.07	45.0	24	1.58	0.07	45.0	25	1.51	0.07	45.0
	26	1.48	0.07	45.0								
36	1	1.34	0.43	319.0	2	1.26	0.40	319.0	3	1.17	0.37	319.0
	4	1.07	0.34	319.0	5	1.00	0.32	319.0	22	1.35	0.06	45.0
	23	1.30	0.06	45.0	24	1.21	0.05	45.0	25	1.14	0.05	45.0
	26	1.10	0.05	45.0								

37	1	1.43	0.46	319.0	2	1.49	0.48	319.0	3	1.57	0.50	319.0
	4	1.66	0.53	319.0	5	1.72	0.55	319.0	22	1.48	0.07	45.0
	23	1.51	0.07	45.0	24	1.58	0.07	45.0	25	1.65	0.07	45.0
	26	1.71	0.08	45.0								
38	1	1.00	0.32	319.0	2	1.07	0.34	319.0	3	1.16	0.37	319.0
	4	1.26	0.40	319.0	5	1.34	0.43	319.0	22	1.10	0.05	45.0
	23	1.14	0.05	45.0	24	1.22	0.05	45.0	25	1.30	0.06	45.0
	26	1.35	0.06	45.0								
39	1	1.76	0.56	319.0	2	1.68	0.53	319.0	3	1.58	0.50	319.0
	4	1.48	0.47	319.0	5	1.41	0.45	319.0	22	1.73	0.08	45.0
	23	1.67	0.07	45.0	24	1.58	0.07	45.0	25	1.50	0.07	45.0
	26	1.46	0.07	45.0								
40	1	1.30	0.41	319.0	2	1.23	0.39	319.0	3	1.16	0.37	319.0
	4	1.09	0.35	319.0	5	1.03	0.33	319.0	22	1.33	0.06	45.0
	23	1.28	0.06	45.0	24	1.21	0.05	45.0	25	1.15	0.05	45.0
	26	1.12	0.05	45.0								
41	1	1.95	0.62	319.0	2	1.99	0.63	319.0	3	2.04	0.65	319.0
	4	2.10	0.67	319.0	5	2.16	0.69	319.0	22	1.95	0.09	45.0
	23	1.97	0.09	45.0	24	2.01	0.09	45.0	25	2.06	0.09	45.0
	26	2.11	0.10	45.0								
42	1	0.67	0.22	319.0	2	0.66	0.21	319.0	3	0.65	0.21	319.0
	4	0.65	0.21	319.0	5	0.66	0.21	319.0	22	0.75	0.03	45.0
	23	0.78	0.04	45.0	24	0.78	0.03	45.0	25	0.78	0.04	45.0
	26	0.79	0.04	45.0								
43	1	2.05	0.65	319.0	2	2.04	0.65	319.0	3	2.04	0.65	319.0
	4	2.04	0.65	319.0	5	2.05	0.65	319.0	22	2.03	0.09	45.0
	23	2.01	0.09	45.0	24	2.01	0.09	45.0	25	2.01	0.09	45.0
	26	2.02	0.09	45.0								
44	1	0.78	0.25	319.0	2	0.72	0.23	319.0	3	0.66	0.21	319.0
	4	0.61	0.19	319.0	5	0.57	0.18	319.0	22	0.85	0.04	45.0
	23	0.82	0.04	45.0	24	0.77	0.03	45.0	25	0.74	0.03	45.0
	26	0.73	0.03	45.0								
45	1	1.95	0.62	319.0	2	1.99	0.64	319.0	3	2.04	0.65	319.0
	4	2.10	0.67	319.0	5	2.15	0.69	319.0	22	1.95	0.09	45.0
	23	1.97	0.09	45.0	24	2.01	0.09	45.0	25	2.06	0.09	45.0
	26	2.11	0.09	45.0								
46	1	0.68	0.22	319.0	2	0.66	0.21	319.0	3	0.65	0.21	319.0
	4	0.65	0.21	319.0	5	0.66	0.21	319.0	22	0.75	0.03	45.0
	23	0.78	0.04	45.0	24	0.78	0.03	45.0	25	0.78	0.04	45.0
	26	0.79	0.04	45.0								
47	1	2.05	0.65	319.0	2	2.04	0.65	319.0	3	2.04	0.65	319.0
	4	2.05	0.65	319.0	5	2.05	0.65	319.0	22	2.03	0.09	45.0
	23	2.01	0.09	45.0	24	2.01	0.09	45.0	25	2.01	0.09	45.0
	26	2.02	0.09	45.0								
48	1	0.77	0.25	319.0	2	0.72	0.23	319.0	3	0.66	0.21	319.0
	4	0.61	0.19	319.0	5	0.57	0.18	319.0	22	0.85	0.04	45.0
	23	0.82	0.04	45.0	24	0.77	0.03	45.0	25	0.74	0.03	45.0
	26	0.73	0.03	45.0								
49	1	2.05	0.65	319.0	2	2.04	0.65	319.0	3	2.04	0.65	319.0
	4	2.05	0.65	319.0	5	2.06	0.66	319.0	22	2.02	0.09	45.0
	23	2.01	0.09	45.0	24	2.01	0.09	45.0	25	2.01	0.09	45.0
	26	2.03	0.09	45.0								
50	1	0.56	0.18	319.0	2	0.60	0.19	319.0	3	0.66	0.21	319.0
	4	0.72	0.23	319.0	5	0.78	0.25	319.0	22	0.73	0.03	45.0
	23	0.74	0.03	45.0	24	0.78	0.04	45.0	25	0.82	0.04	45.0
	26	0.85	0.04	45.0								
51	1	2.15	0.69	319.0	2	2.10	0.67	319.0	3	2.04	0.65	319.0
	4	1.99	0.64	319.0	5	1.95	0.62	319.0	22	2.11	0.09	45.0
	23	2.06	0.09	45.0	24	2.01	0.09	45.0	25	1.97	0.09	45.0
	26	1.95	0.09	45.0								
52	1	0.65	0.21	319.0	2	0.65	0.21	319.0	3	0.65	0.21	319.0
	4	0.66	0.21	319.0	5	0.68	0.22	319.0	22	0.79	0.04	45.0
	23	0.78	0.04	45.0	24	0.77	0.03	45.0	25	0.78	0.04	45.0
	26	0.76	0.03	45.0								
53	1	2.05	0.65	319.0	2	2.04	0.65	319.0	3	2.04	0.65	319.0
	4	2.05	0.65	319.0	5	2.06	0.66	319.0	22	2.02	0.09	45.0
	23	2.01	0.09	45.0	24	2.01	0.09	45.0	25	2.01	0.09	45.0
	26	2.03	0.09	45.0								
54	1	0.56	0.18	319.0	2	0.60	0.19	319.0	3	0.66	0.21	319.0
	4	0.72	0.23	319.0	5	0.78	0.25	319.0	22	0.73	0.03	45.0
	23	0.74	0.03	45.0	24	0.78	0.04	45.0	25	0.82	0.04	45.0
	26	0.85	0.04	45.0								
55	1	2.15	0.69	319.0	2	2.10	0.67	319.0	3	2.04	0.65	319.0
	4	1.99	0.64	319.0	5	1.96	0.62	319.0	22	2.11	0.09	45.0
	23	2.06	0.09	45.0	24	2.01	0.09	45.0	25	1.97	0.09	45.0
	26	1.96	0.09	45.0								
56	1	0.65	0.21	319.0	2	0.65	0.21	319.0	3	0.65	0.21	319.0
	4	0.66	0.21	319.0	5	0.68	0.22	319.0	22	0.78	0.04	45.0

	23	0.78	0.04	45.0	24	0.77	0.03	45.0	25	0.78	0.03	45.0
	26	0.76	0.03	45.0								
57	1	1.40	0.45	319.0	2	1.50	0.48	319.0	3	1.61	0.51	319.0
	4	1.73	0.55	319.0	5	1.83	0.58	319.0	22	1.47	0.07	45.0
	23	1.52	0.07	45.0	24	1.62	0.07	45.0	25	1.72	0.08	45.0
	26	1.79	0.08	45.0								
58	1	0.96	0.31	319.0	2	1.04	0.33	319.0	3	1.13	0.36	319.0
	4	1.22	0.39	319.0	5	1.30	0.42	319.0	22	1.07	0.05	45.0
	23	1.11	0.05	45.0	24	1.19	0.05	45.0	25	1.27	0.06	45.0
	26	1.32	0.06	45.0								
59	1	1.78	0.57	319.0	2	1.71	0.55	319.0	3	1.61	0.51	319.0
	4	1.51	0.48	319.0	5	1.44	0.46	319.0	22	1.76	0.08	45.0
	23	1.70	0.08	45.0	24	1.61	0.07	45.0	25	1.53	0.07	45.0
	26	1.49	0.07	45.0								
60	1	1.34	0.43	319.0	2	1.25	0.40	319.0	3	1.14	0.36	319.0
	4	1.03	0.33	319.0	5	0.94	0.30	319.0	22	1.35	0.06	45.0
	23	1.28	0.06	45.0	24	1.18	0.05	45.0	25	1.09	0.05	45.0
	26	1.05	0.05	45.0								
61	1	1.43	0.46	319.0	2	1.51	0.48	319.0	3	1.61	0.51	319.0
	4	1.71	0.55	319.0	5	1.79	0.57	319.0	22	1.49	0.07	45.0
	23	1.53	0.07	45.0	24	1.61	0.07	45.0	25	1.70	0.08	45.0
	26	1.77	0.08	45.0								
62	1	0.94	0.30	319.0	2	1.03	0.33	319.0	3	1.13	0.36	319.0
	4	1.25	0.40	319.0	5	1.35	0.43	319.0	22	1.05	0.05	45.0
	23	1.10	0.05	45.0	24	1.19	0.05	45.0	25	1.29	0.06	45.0
	26	1.35	0.06	45.0								
63	1	1.83	0.58	319.0	2	1.73	0.55	319.0	3	1.61	0.51	319.0
	4	1.50	0.48	319.0	5	1.41	0.45	319.0	22	1.79	0.08	45.0
	23	1.71	0.08	45.0	24	1.61	0.07	45.0	25	1.52	0.07	45.0
	26	1.47	0.07	45.0								
64	1	1.30	0.41	319.0	2	1.22	0.39	319.0	3	1.13	0.36	319.0
	4	1.04	0.33	319.0	5	0.97	0.31	319.0	22	1.32	0.06	45.0
	23	1.27	0.06	45.0	24	1.18	0.05	45.0	25	1.11	0.05	45.0
	26	1.07	0.05	45.0								
65	1	1.41	0.45	319.0	2	1.50	0.48	319.0	3	1.61	0.51	319.0
	4	1.73	0.55	319.0	5	1.83	0.58	319.0	22	1.47	0.07	45.0
	23	1.52	0.07	45.0	24	1.61	0.07	45.0	25	1.71	0.08	45.0
	26	1.79	0.08	45.0								
66	1	0.97	0.31	319.0	2	1.04	0.33	319.0	3	1.13	0.36	319.0
	4	1.22	0.39	319.0	5	1.30	0.41	319.0	22	1.07	0.05	45.0
	23	1.11	0.05	45.0	24	1.19	0.05	45.0	25	1.27	0.06	45.0
	26	1.32	0.06	45.0								
67	1	1.78	0.57	319.0	2	1.71	0.54	319.0	3	1.61	0.51	319.0
	4	1.52	0.48	319.0	5	1.44	0.46	319.0	22	1.76	0.08	45.0
	23	1.70	0.08	45.0	24	1.61	0.07	45.0	25	1.53	0.07	45.0
	26	1.50	0.07	45.0								
68	1	1.34	0.43	319.0	2	1.24	0.40	319.0	3	1.14	0.36	319.0
	4	1.03	0.33	319.0	5	0.94	0.30	319.0	22	1.34	0.06	45.0
	23	1.28	0.06	45.0	24	1.18	0.05	45.0	25	1.10	0.05	45.0
	26	1.05	0.05	45.0								
69	1	1.44	0.46	319.0	2	1.51	0.48	319.0	3	1.61	0.51	319.0
	4	1.71	0.54	319.0	5	1.78	0.57	319.0	22	1.49	0.07	45.0
	23	1.54	0.07	45.0	24	1.61	0.07	45.0	25	1.70	0.08	45.0
	26	1.76	0.08	45.0								
70	1	0.94	0.30	319.0	2	1.03	0.33	319.0	3	1.13	0.36	319.0
	4	1.24	0.40	319.0	5	1.34	0.43	319.0	22	1.05	0.05	45.0
	23	1.10	0.05	45.0	24	1.19	0.05	45.0	25	1.28	0.06	45.0
	26	1.35	0.06	45.0								
71	1	1.82	0.58	319.0	2	1.73	0.55	319.0	3	1.61	0.51	319.0
	4	1.50	0.48	319.0	5	1.41	0.45	319.0	22	1.79	0.08	45.0
	23	1.71	0.08	45.0	24	1.61	0.07	45.0	25	1.52	0.07	45.0
	26	1.47	0.07	45.0								
72	1	1.29	0.41	319.0	2	1.22	0.39	319.0	3	1.13	0.36	319.0
	4	1.05	0.33	319.0	5	0.97	0.31	319.0	22	1.32	0.06	45.0
	23	1.26	0.06	45.0	24	1.18	0.05	45.0	25	1.11	0.05	45.0
	26	1.07	0.05	45.0								
73	1	2.05	0.65	319.0	2	2.09	0.67	319.0	3	2.15	0.69	319.0
	4	2.22	0.71	319.0	5	2.28	0.73	319.0	22	2.04	0.09	45.0
	23	2.06	0.09	45.0	24	2.11	0.09	45.0	25	2.17	0.10	45.0
	26	2.23	0.10	45.0								
74	1	0.56	0.18	319.0	2	0.55	0.17	319.0	3	0.54	0.17	319.0
	4	0.54	0.17	319.0	5	0.54	0.17	319.0	22	0.64	0.03	45.0
	23	0.68	0.03	45.0	24	0.68	0.03	45.0	25	0.68	0.03	45.0
	26	0.69	0.03	45.0								
75	1	2.16	0.69	319.0	2	2.16	0.69	319.0	3	2.15	0.69	319.0
	4	2.16	0.69	319.0	5	2.16	0.69	319.0	22	2.13	0.10	45.0
	23	2.11	0.10	45.0	24	2.11	0.09	45.0	25	2.11	0.09	45.0
	26	2.12	0.10	45.0								

76	1	0.68	0.22	319.0	2	0.62	0.20	319.0	3	0.55	0.18	319.0
	4	0.48	0.15	319.0	5	0.44	0.14	319.0	22	0.76	0.03	45.0
	23	0.73	0.03	45.0	24	0.67	0.03	45.0	25	0.64	0.03	45.0
	26	0.63	0.03	45.0								
77	1	2.05	0.65	319.0	2	2.09	0.67	319.0	3	2.15	0.69	319.0
	4	2.22	0.71	319.0	5	2.28	0.73	319.0	22	2.04	0.09	45.0
	23	2.06	0.09	45.0	24	2.11	0.09	45.0	25	2.17	0.10	45.0
	26	2.23	0.10	45.0								
78	1	0.56	0.18	319.0	2	0.55	0.17	319.0	3	0.54	0.17	319.0
	4	0.53	0.17	319.0	5	0.54	0.17	319.0	22	0.65	0.03	45.0
	23	0.68	0.03	45.0	24	0.68	0.03	45.0	25	0.68	0.03	45.0
	26	0.69	0.03	45.0								
79	1	2.16	0.69	319.0	2	2.16	0.69	319.0	3	2.15	0.69	319.0
	4	2.16	0.69	319.0	5	2.16	0.69	319.0	22	2.13	0.10	45.0
	23	2.11	0.10	45.0	24	2.11	0.09	45.0	25	2.11	0.10	45.0
	26	2.13	0.10	45.0								
80	1	0.68	0.22	319.0	2	0.62	0.20	319.0	3	0.55	0.18	319.0
	4	0.48	0.15	319.0	5	0.44	0.14	319.0	22	0.76	0.03	45.0
	23	0.73	0.03	45.0	24	0.67	0.03	45.0	25	0.64	0.03	45.0
	26	0.63	0.03	45.0								
81	1	2.16	0.69	319.0	2	2.15	0.69	319.0	3	2.15	0.69	319.0
	4	2.16	0.69	319.0	5	2.17	0.69	319.0	22	2.12	0.10	45.0
	23	2.11	0.09	45.0	24	2.11	0.09	45.0	25	2.12	0.10	45.0
	26	2.14	0.10	45.0								
82	1	0.43	0.14	319.0	2	0.48	0.15	319.0	3	0.55	0.17	319.0
	4	0.62	0.20	319.0	5	0.69	0.22	319.0	22	0.63	0.03	45.0
	23	0.64	0.03	45.0	24	0.68	0.03	45.0	25	0.73	0.03	45.0
	26	0.77	0.03	45.0								
83	1	2.28	0.73	319.0	2	2.22	0.71	319.0	3	2.16	0.69	319.0
	4	2.10	0.67	319.0	5	2.05	0.65	319.0	22	2.22	0.10	45.0
	23	2.17	0.10	45.0	24	2.11	0.09	45.0	25	2.06	0.09	45.0
	26	2.04	0.09	45.0								
84	1	0.54	0.17	319.0	2	0.53	0.17	319.0	3	0.54	0.17	319.0
	4	0.55	0.17	319.0	5	0.57	0.18	319.0	22	0.69	0.03	45.0
	23	0.68	0.03	45.0	24	0.67	0.03	45.0	25	0.68	0.03	45.0
	26	0.65	0.03	45.0								
85	1	2.16	0.69	319.0	2	2.16	0.69	319.0	3	2.15	0.69	319.0
	4	2.16	0.69	319.0	5	2.17	0.69	319.0	22	2.12	0.10	45.0
	23	2.11	0.09	45.0	24	2.11	0.09	45.0	25	2.12	0.10	45.0
	26	2.14	0.10	45.0								
86	1	0.43	0.14	319.0	2	0.48	0.15	319.0	3	0.55	0.17	319.0
	4	0.62	0.20	319.0	5	0.68	0.22	319.0	22	0.63	0.03	45.0
	23	0.64	0.03	45.0	24	0.68	0.03	45.0	25	0.73	0.03	45.0
	26	0.76	0.03	45.0								
87	1	2.28	0.73	319.0	2	2.22	0.71	319.0	3	2.16	0.69	319.0
	4	2.10	0.67	319.0	5	2.05	0.65	319.0	22	2.22	0.10	45.0
	23	2.16	0.10	45.0	24	2.11	0.09	45.0	25	2.06	0.09	45.0
	26	2.05	0.09	45.0								
88	1	0.54	0.17	319.0	2	0.53	0.17	319.0	3	0.54	0.17	319.0
	4	0.55	0.18	319.0	5	0.57	0.18	319.0	22	0.69	0.03	45.0
	23	0.68	0.03	45.0	24	0.67	0.03	45.0	25	0.68	0.03	45.0
	26	0.65	0.03	45.0								

Cmb	**1000 etaT/h**
	2.28

RISULTATI ELEMENTI TIPO TRAVE

LEGENDA RISULTATI ELEMENTI TIPO TRAVE

Il controllo dei risultati delle analisi condotte, per quanto concerne gli elementi tipo trave, è possibile in relazione alle tabelle sotto riportate.

Gli elementi vengono suddivisi in relazione alle proprietà in elementi:

- tipo **pilastro**
- tipo **trave in elevazione**
- tipo **trave in fondazione**

Per ogni elemento e per ogni combinazione (o caso di carico) vengono riportati i risultati più significativi.

Per gli elementi tipo *pilastro* sono riportati in tabella i seguenti valori:

Pilas.	numero dell'elemento pilastro
Cmb	combinazione in cui si verificano i valori riportati
M3 mx/mn	momento flettente in campata M3 max (prima riga) / min (seconda riga)
M2 mx/mn	momento flettente in campata M2 max (prima riga) / min (seconda riga)
D2/D3	freccia massima in direzione 2 (prima riga) / direzione 3 (seconda riga)
Q2/Q3	carico totale in direzione 2 (prima riga) / direzione 3 (seconda riga)
Pos.	ascissa del punto iniziale e finale dell'elemento
N, V2, ecc..	sei componenti di sollecitazione al piede ed in sommità dell'elemento

Per gli elementi tipo *trave in elevazione* sono riportati, oltre al numero dell'elemento, i medesimi risultati visti per i pilastri.

Per gli elementi tipo *trave in fondazione* (trave f.) sono riportati, oltre al numero dell'elemento, i medesimi risultati visti per i pilastri e la massima pressione sul terreno.

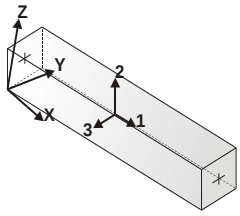

orientamento elementi 2D non verticali

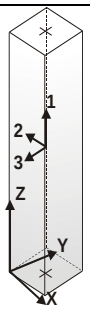

orientamento elementi 2D verticali

Pilas.	Cmb	M3 mx/mn	M2 mx/mn	D 2 / D 3	Q 2 / Q 3	Pos.	N	V 2	V 3	T	M 2	M 3
		kN m	kN m	m	kN	cm	kN	kN	kN	kN m	kN m	kN m
1	7	2.16	0.13	1.67e-04	0.0	0.0	-28.72	-2.22	-0.12	0.05	0.13	2.16
		-4.93	-0.25	-3.79e-03	0.0	319.0	-21.55	-2.22	-0.12	0.05	-0.25	-4.93
1	10	2.91	0.27	2.29e-04	0.0	0.0	-40.79	-3.03	-0.22	0.07	0.27	2.91
		-6.74	-0.45	-6.19e-03	0.0	319.0	-31.46	-3.03	-0.22	0.07	-0.45	-6.74
1	14	2.91	0.28	2.29e-04	0.0	0.0	-40.76	-3.02	-0.22	0.07	0.28	2.91
		-6.74	-0.44	-5.50e-03	0.0	319.0	-31.42	-3.02	-0.22	0.07	-0.44	-6.74
1	28	5.56	0.27	6.68e-04	0.0	0.0	-32.06	-4.00	-0.19	-0.22	0.27	5.56
		-7.21	-0.33	-4.32e-03	0.0	319.0	-24.88	-4.00	-0.19	-0.22	-0.33	-7.21
1	50	0.33	4.06	-1.56e-04	0.0	0.0	-33.76	-1.43	-2.13	0.22	4.06	0.33
		-4.01	-2.73	-1.90e-03	0.0	319.0	-26.58	-1.43	-2.13	0.22	-2.73	-4.01
1	51	4.00	2.20	3.76e-04	0.0	0.0	-23.74	-3.02	1.89	-0.12	-3.82	4.00
		-5.87	-3.82	-6.86e-03	0.0	319.0	-16.56	-3.02	1.89	-0.12	2.20	-5.87
1	53	2.16	1.94	1.23e-04	0.0	0.0	-22.68	-2.08	1.68	0.03	-3.42	2.16
		-4.70	-3.42	-6.53e-03	0.0	319.0	-15.50	-2.08	1.68	0.03	1.94	-4.70
1	56	2.18	3.66	2.12e-04	0.0	0.0	-34.82	-2.38	-1.92	0.07	3.66	2.18
		-5.17	-2.46	-2.22e-03	0.0	319.0	-27.64	-2.38	-1.92	0.07	-2.46	-5.17
1	60	6.12	0.29	7.61e-04	0.0	0.0	-32.59	-4.29	-0.20	-0.27	0.29	6.12
		-7.58	-0.34	-4.31e-03	0.0	319.0	-25.42	-4.29	-0.20	-0.27	-0.34	-7.58
1	82	0.04	4.70	-1.98e-04	0.0	0.0	-34.55	-1.30	-2.45	0.24	4.70	0.04
		-3.86	-3.13	-1.49e-03	0.0	319.0	-27.37	-1.30	-2.45	0.24	-3.13	-3.86
1	83	4.30	2.60	4.13e-04	0.0	0.0	-22.95	-3.15	2.22	-0.14	-4.47	4.30
		-6.01	-4.47	-7.26e-03	0.0	319.0	-15.77	-3.15	2.22	-0.14	2.60	-6.01
1	85	2.15	2.30	1.15e-04	0.0	0.0	-21.72	-2.05	1.97	0.03	-4.00	2.15
		-4.65	-4.00	-6.89e-03	0.0	319.0	-14.54	-2.05	1.97	0.03	2.30	-4.65
1	88	2.18	4.23	2.19e-04	0.0	0.0	-35.78	-2.40	-2.21	0.07	4.23	2.18
		-5.22	-2.82	-1.87e-03	0.0	319.0	-28.60	-2.40	-2.21	0.07	-2.82	-5.22
1	92	7.24	0.34	9.44e-04	0.0	0.0	-33.71	-4.88	-0.22	-0.36	0.34	7.24
		-8.34	-0.36	-4.30e-03	0.0	319.0	-26.53	-4.88	-0.22	-0.36	-0.36	-8.34
1	114	-0.57	5.99	-2.83e-04	0.0	0.0	-36.22	-1.03	-3.11	0.30	5.99	-0.57
		-3.53	-3.94	-6.76e-04	0.0	319.0	-29.04	-1.03	-3.11	0.30	-3.94	-3.53
1	115	4.91	3.41	4.92e-04	0.0	0.0	-21.29	-3.42	2.88	-0.20	-5.76	4.91
		-6.34	-5.76	-8.08e-03	0.0	319.0	-14.11	-3.42	2.88	-0.20	3.41	-6.34
1	117	2.15	3.02	1.02e-04	0.0	0.0	-19.70	-2.01	2.57	0.02	-5.16	2.15
		-4.60	-5.16	-7.59e-03	0.0	319.0	-12.52	-2.01	2.57	0.02	3.02	-4.60
1	120	2.19	5.39	2.33e-04	0.0	0.0	-37.80	-2.45	-2.80	0.08	5.39	2.19
		-5.28	-3.54	-1.16e-03	0.0	319.0	-30.63	-2.45	-2.80	0.08	-3.54	-5.28
1	123	2.17	0.12	1.67e-04	0.0	0.0	-28.74	-2.23	-0.12	0.05	0.12	2.17
		-4.93	-0.26	-4.11e-03	0.0	319.0	-21.56	-2.23	-0.12	0.05	-0.26	-4.93
1	126	2.23	0.19	1.75e-04	0.0	0.0	-31.03	-2.31	-0.17	0.05	0.19	2.23
		-5.15	-0.33	-4.76e-03	0.0	319.0	-23.85	-2.31	-0.17	0.05	-0.33	-5.15
1	130	2.23	0.20	1.75e-04	0.0	0.0	-31.01	-2.31	-0.17	0.05	0.20	2.23
		-5.15	-0.33	-4.30e-03	0.0	319.0	-23.83	-2.31	-0.17	0.05	-0.33	-5.15
1	134	2.17	0.12	1.67e-04	0.0	0.0	-28.75	-2.23	-0.12	0.05	0.12	2.17
		-4.94	-0.26	-4.31e-03	0.0	319.0	-21.57	-2.23	-0.12	0.05	-0.26	-4.94
1	136	2.18	0.12	1.68e-04	0.0	0.0	-29.09	-2.24	-0.13	0.05	0.12	2.18
		-4.97	-0.28	-4.77e-03	0.0	319.0	-21.91	-2.24	-0.13	0.05	-0.28	-4.97
1	137	2.18	0.13	1.68e-04	0.0	0.0	-29.07	-2.24	-0.13	0.05	0.13	2.18
		-4.97	-0.27	-4.38e-03	0.0	319.0	-21.89	-2.24	-0.13	0.05	-0.27	-4.97
1	138	2.17	0.11	1.67e-04	0.0	0.0	-28.77	-2.23	-0.12	0.05	0.11	2.17
		-4.94	-0.27	-4.77e-03	0.0	319.0	-21.59	-2.23	-0.12	0.05	-0.27	-4.94
1	139	2.17	0.12	1.67e-04	0.0	0.0	-28.75	-2.23	-0.12	0.05	0.12	2.17
		-4.94	-0.26	-4.38e-03	0.0	319.0	-21.57	-2.23	-0.12	0.05	-0.26	-4.94
2	7	1.75	0.72	8.21e-05	0.0	0.0	-54.99	-1.55	-0.46	8.52e-03	0.72	1.75
		-3.21	-0.74	-3.76e-03	0.0	319.0	-47.81	-1.55	-0.46	8.52e-03	-0.74	-3.21
2	10	2.35	1.07	1.11e-04	0.0	0.0	-78.61	-2.09	-0.69	0.01	1.07	2.35
		-4.30	-1.11	-6.15e-03	0.0	319.0	-69.28	-2.09	-0.69	0.01	-1.11	-4.30
2	14	2.35	1.08	1.11e-04	0.0	0.0	-78.56	-2.09	-0.69	0.01	1.08	2.35
		-4.30	-1.10	-5.47e-03	0.0	319.0	-69.23	-2.09	-0.69	0.01	-1.10	-4.30
2	28	6.02	1.84	6.05e-04	0.0	0.0	-59.32	-3.69	-1.05	-0.27	1.84	6.02
		-5.74	-1.52	-4.02e-03	0.0	319.0	-52.14	-3.69	-1.05	-0.27	-1.52	-5.74
2	53	1.61	1.94	4.85e-05	0.0	0.0	-44.23	-1.43	1.60	0.14	-3.18	1.61
		-2.97	-3.18	-6.52e-03	0.0	319.0	-37.05	-1.43	1.60	0.14	1.94	-2.97
2	56	1.89	4.61	1.17e-04	0.0	0.0	-65.84	-1.68	-2.52	-0.12	4.61	1.89
		-3.44	-3.43	-2.18e-03	0.0	319.0	-58.67	-1.68	-2.52	-0.12	-3.43	-3.44
2	60	6.72	2.02	6.97e-04	0.0	0.0	-60.00	-4.04	-1.15	-0.32	2.02	6.72
		-6.16	-1.64	-3.97e-03	0.0	319.0	-52.82	-4.04	-1.15	-0.32	-1.64	-6.16
2	85	1.59	2.37	4.34e-05	0.0	0.0	-42.52	-1.41	1.94	0.16	-3.81	1.59
		-2.93	-3.81	-6.87e-03	0.0	319.0	-35.34	-1.41	1.94	0.16	2.37	-2.93
2	88	1.92	5.24	1.23e-04	0.0	0.0	-67.55	-1.70	-2.85	-0.14	5.24	1.92
		-3.49	-3.86	-1.83e-03	0.0	319.0	-60.37	-1.70	-2.85	-0.14	-3.86	-3.49
2	92	8.13	2.39	8.80e-04	0.0	0.0	-61.44	-4.74	-1.34	-0.41	2.39	8.13
		-7.00	-1.90	-3.86e-03	0.0	319.0	-54.26	-4.74	-1.34	-0.41	-1.90	-7.00
2	117	1.54	3.25	3.44e-05	0.0	0.0	-38.90	-1.37	2.61	0.20	-5.09	1.54
		-2.86	-5.09	-7.59e-03	0.0	319.0	-31.73	-1.37	2.61	0.20	3.25	-2.86

2	120	1.96	6.52	1.34e-04	0.0	0.0	-71.17	-1.74	-3.53	-0.18	6.52	1.96
		-3.56	-4.74	-1.11e-03	0.0	319.0	-63.99	-1.74	-3.53	-0.18	-4.74	-3.56
2	123	1.75	0.72	8.21e-05	0.0	0.0	-55.02	-1.55	-0.46	8.52e-03	0.72	1.75
		-3.21	-0.74	-4.09e-03	0.0	319.0	-47.84	-1.55	-0.46	8.52e-03	-0.74	-3.21
2	126	1.80	0.81	8.47e-05	0.0	0.0	-59.75	-1.60	-0.52	9.28e-03	0.81	1.80
		-3.29	-0.84	-4.74e-03	0.0	319.0	-52.57	-1.60	-0.52	9.28e-03	-0.84	-3.29
2	130	1.80	0.82	8.46e-05	0.0	0.0	-59.71	-1.60	-0.52	9.27e-03	0.82	1.80
		-3.29	-0.84	-4.28e-03	0.0	319.0	-52.54	-1.60	-0.52	9.27e-03	-0.84	-3.29
2	134	1.75	0.72	8.21e-05	0.0	0.0	-55.03	-1.55	-0.46	8.52e-03	0.72	1.75
		-3.21	-0.74	-4.28e-03	0.0	319.0	-47.85	-1.55	-0.46	8.52e-03	-0.74	-3.21
2	136	1.76	0.72	8.25e-05	0.0	0.0	-55.73	-1.56	-0.47	8.63e-03	0.72	1.76
		-3.22	-0.76	-4.74e-03	0.0	319.0	-48.55	-1.56	-0.47	8.63e-03	-0.76	-3.22
2	137	1.76	0.73	8.25e-05	0.0	0.0	-55.70	-1.56	-0.47	8.63e-03	0.73	1.76
		-3.22	-0.76	-4.35e-03	0.0	319.0	-48.52	-1.56	-0.47	8.63e-03	-0.76	-3.22
2	138	1.75	0.71	8.21e-05	0.0	0.0	-55.06	-1.55	-0.46	8.53e-03	0.71	1.75
		-3.21	-0.75	-4.74e-03	0.0	319.0	-47.89	-1.55	-0.46	8.53e-03	-0.75	-3.21
2	139	1.75	0.71	8.21e-05	0.0	0.0	-55.03	-1.55	-0.46	8.52e-03	0.71	1.75
		-3.21	-0.75	-4.35e-03	0.0	319.0	-47.86	-1.55	-0.46	8.52e-03	-0.75	-3.21
3	7	0.74	0.93	3.84e-05	0.0	0.0	-54.95	-0.67	-0.56	0.02	0.93	0.74
		-1.39	-0.84	-3.75e-03	0.0	319.0	-47.77	-0.67	-0.56	0.02	-0.84	-1.39
3	10	0.96	1.34	5.02e-05	0.0	0.0	-78.77	-0.87	-0.81	0.02	1.34	0.96
		-1.81	-1.25	-6.14e-03	0.0	319.0	-69.44	-0.87	-0.81	0.02	-1.25	-1.81
3	14	0.96	1.35	5.02e-05	0.0	0.0	-78.72	-0.87	-0.81	0.02	1.35	0.96
		-1.81	-1.24	-5.45e-03	0.0	319.0	-69.39	-0.87	-0.81	0.02	-1.24	-1.81
3	28	5.52	2.06	5.99e-04	0.0	0.0	-57.80	-3.14	-1.16	-0.26	2.06	5.52
		-4.50	-1.63	-3.69e-03	0.0	319.0	-50.63	-3.14	-1.16	-0.26	-1.63	-4.50
3	44	3.35	4.64	3.06e-04	0.0	0.0	-64.96	-2.03	-2.51	-0.14	4.64	3.35
		-3.13	-3.39	-2.17e-03	0.0	319.0	-57.78	-2.03	-2.51	-0.14	-3.39	-3.13
3	50	0.18	4.61	-2.60e-04	0.0	0.0	-65.21	0.61	-2.50	0.18	4.61	-1.78
		-1.78	-3.36	-2.17e-03	0.0	319.0	-58.03	0.61	-2.50	0.18	-3.36	0.18
3	51	3.25	1.65	3.02e-04	0.0	0.0	-44.78	-1.94	1.38	-0.14	-2.76	3.25
		-2.95	-2.76	-6.51e-03	0.0	319.0	-37.60	-1.94	1.38	-0.14	1.65	-2.95
3	60	6.31	2.24	6.94e-04	0.0	0.0	-58.25	-3.55	-1.25	-0.31	2.24	6.31
		-5.01	-1.76	-3.59e-03	0.0	319.0	-51.08	-3.55	-1.25	-0.31	-1.76	-5.01
3	76	3.77	5.24	3.52e-04	0.0	0.0	-66.55	-2.25	-2.83	-0.16	5.24	3.77
		-3.41	-3.80	-1.82e-03	0.0	319.0	-59.37	-2.25	-2.83	-0.16	-3.80	-3.41
3	82	0.44	5.21	-3.06e-04	0.0	0.0	-66.83	0.82	-2.82	0.20	5.21	-2.19
		-2.19	-3.77	-1.82e-03	0.0	319.0	-59.65	0.82	-2.82	0.20	-3.77	0.44
3	83	3.66	2.06	3.48e-04	0.0	0.0	-43.16	-2.15	1.70	-0.17	-3.36	3.66
		-3.21	-3.36	-6.87e-03	0.0	319.0	-35.98	-2.15	1.70	-0.17	2.06	-3.21
3	89	3.27	0.31	-8.39e-04	0.0	0.0	-50.81	3.03	0.34	0.44	-0.77	-6.41
		-6.41	-0.77	-5.31e-03	0.0	319.0	-43.63	3.03	0.34	0.44	0.31	3.27
3	92	7.89	2.61	8.81e-04	0.0	0.0	-59.18	-4.36	-1.45	-0.40	2.61	7.89
		-6.04	-2.02	-3.37e-03	0.0	319.0	-52.00	-4.36	-1.45	-0.40	-2.02	-6.04
3	108	4.63	6.46	4.45e-04	0.0	0.0	-69.91	-2.70	-3.48	-0.21	6.46	4.63
		-3.99	-4.63	-1.10e-03	0.0	319.0	-62.73	-2.70	-3.48	-0.21	-4.63	-3.99
3	114	0.95	6.42	-3.97e-04	0.0	0.0	-70.26	1.24	-3.45	0.26	6.42	-3.01
		-3.01	-4.59	-1.10e-03	0.0	319.0	-63.08	1.24	-3.45	0.26	-4.59	0.95
3	115	4.49	2.89	4.40e-04	0.0	0.0	-39.73	-2.57	2.34	-0.22	-4.57	4.49
		-3.72	-4.57	-7.58e-03	0.0	319.0	-32.56	-2.57	2.34	-0.22	2.89	-3.72
3	123	0.74	0.93	3.84e-05	0.0	0.0	-54.97	-0.67	-0.56	0.02	0.93	0.74
		-1.39	-0.85	-4.08e-03	0.0	319.0	-47.80	-0.67	-0.56	0.02	-0.85	-1.39
3	126	0.74	1.02	3.86e-05	0.0	0.0	-59.85	-0.67	-0.62	0.02	1.02	0.74
		-1.39	-0.95	-4.73e-03	0.0	319.0	-52.67	-0.67	-0.62	0.02	-0.95	-1.39
3	130	0.74	1.02	3.86e-05	0.0	0.0	-59.82	-0.67	-0.62	0.02	1.02	0.74
		-1.39	-0.94	-4.27e-03	0.0	319.0	-52.64	-0.67	-0.62	0.02	-0.94	-1.39
3	134	0.74	0.92	3.84e-05	0.0	0.0	-54.99	-0.67	-0.56	0.02	0.92	0.74
		-1.39	-0.85	-4.28e-03	0.0	319.0	-47.81	-0.67	-0.56	0.02	-0.85	-1.39
3	136	0.74	0.93	3.84e-05	0.0	0.0	-55.71	-0.67	-0.57	0.02	0.93	0.74
		-1.39	-0.87	-4.73e-03	0.0	319.0	-48.53	-0.67	-0.57	0.02	-0.87	-1.39
3	137	0.74	0.94	3.84e-05	0.0	0.0	-55.68	-0.67	-0.57	0.02	0.94	0.74
		-1.39	-0.87	-4.34e-03	0.0	319.0	-48.50	-0.67	-0.57	0.02	-0.87	-1.39
3	138	0.74	0.92	3.84e-05	0.0	0.0	-55.03	-0.67	-0.56	0.02	0.92	0.74
		-1.39	-0.86	-4.73e-03	0.0	319.0	-47.85	-0.67	-0.56	0.02	-0.86	-1.39
3	139	0.74	0.92	3.84e-05	0.0	0.0	-55.00	-0.67	-0.56	0.02	0.92	0.74
		-1.39	-0.85	-4.34e-03	0.0	319.0	-47.82	-0.67	-0.56	0.02	-0.85	-1.39
4	7	1.91	0.76	-6.22e-05	0.0	0.0	-54.31	0.98	-0.48	3.74e-03	0.76	-1.21
		-1.21	-0.76	-3.77e-03	0.0	319.0	-47.13	0.98	-0.48	3.74e-03	-0.76	1.91
4	10	2.61	1.13	-8.46e-05	0.0	0.0	-77.72	1.33	-0.71	3.84e-03	1.13	-1.64
		-1.64	-1.15	-6.16e-03	0.0	319.0	-68.39	1.33	-0.71	3.84e-03	-1.15	2.61
4	14	2.61	1.14	-8.46e-05	0.0	0.0	-77.67	1.33	-0.71	3.85e-03	1.14	-1.64
		-1.64	-1.14	-5.47e-03	0.0	319.0	-68.34	1.33	-0.71	3.85e-03	-1.14	2.61
4	30	4.72	1.88	-6.17e-04	0.0	0.0	-58.70	3.25	-1.07	0.28	1.88	-5.66
		-5.66	-1.54	-4.02e-03	0.0	319.0	-51.52	3.25	-1.07	0.28	-1.54	4.72
4	42	2.14	4.65	-1.03e-04	0.0	0.0	-64.94	1.10	-2.54	3.04e-04	4.65	-1.37
		-1.37	-3.45	-2.19e-03	0.0	319.0	-57.77	1.10	-2.54	3.04e-04	-3.45	2.14
4	43	1.68	1.91	-2.47e-05	0.0	0.0	-43.76	0.86	1.58	7.17e-03	-3.14	-1.05
		-1.05	-3.14	-6.52e-03	0.0	319.0	-36.58	0.86	1.58	7.17e-03	1.91	1.68

4	46	2.12	4.66	-9.92e-05	0.0	0.0	-64.94	1.08	-2.54	-2.05e-03	4.66	-1.33
		-1.33	-3.46	-2.19e-03	0.0	319.0	-57.76	1.08	-2.54	-2.05e-03	-3.46	2.12
4	62	5.18	2.06	-7.10e-04	0.0	0.0	-59.38	3.62	-1.16	0.32	2.06	-6.38
		-6.38	-1.66	-3.97e-03	0.0	319.0	-52.20	3.62	-1.16	0.32	-1.66	5.18
4	74	2.18	5.28	-1.10e-04	0.0	0.0	-66.63	1.12	-2.87	-2.52e-04	5.28	-1.39
		-1.39	-3.89	-1.83e-03	0.0	319.0	-59.45	1.12	-2.87	-2.52e-04	-3.89	2.18
4	75	1.65	2.34	-1.91e-05	0.0	0.0	-42.08	0.84	1.92	7.72e-03	-3.77	-1.03
		-1.03	-3.77	-6.88e-03	0.0	319.0	-34.90	0.84	1.92	7.72e-03	2.34	1.65
4	78	2.15	5.29	-1.06e-04	0.0	0.0	-66.63	1.10	-2.88	-2.99e-03	5.29	-1.35
		-1.35	-3.89	-1.83e-03	0.0	319.0	-59.45	1.10	-2.88	-2.99e-03	-3.89	2.15
4	94	6.10	2.43	-8.95e-04	0.0	0.0	-60.83	4.37	-1.36	0.41	2.43	-7.85
		-7.85	-1.92	-3.86e-03	0.0	319.0	-53.65	4.37	-1.36	0.41	-1.92	6.10
4	106	2.25	6.56	-1.23e-04	0.0	0.0	-70.21	1.16	-3.55	-1.38e-03	6.56	-1.44
		-1.44	-4.77	-1.12e-03	0.0	319.0	-63.04	1.16	-3.55	-1.38e-03	-4.77	2.25
4	107	1.57	3.22	2.15e-05	0.0	0.0	-38.49	0.80	2.59	8.85e-03	-5.05	-0.98
		-0.98	-5.05	-7.59e-03	0.0	319.0	-31.32	0.80	2.59	8.85e-03	3.22	1.57
4	110	2.22	6.57	-1.18e-04	0.0	0.0	-70.21	1.13	-3.55	-4.89e-03	6.57	-1.39
		-1.39	-4.77	-1.12e-03	0.0	319.0	-63.03	1.13	-3.55	-4.89e-03	-4.77	2.22
4	111	1.60	3.23	1.54e-05	0.0	0.0	-38.50	0.82	2.60	0.01	-5.06	-1.03
		-1.03	-5.06	-7.59e-03	0.0	319.0	-31.32	0.82	2.60	0.01	3.23	1.60
4	123	1.91	0.76	-6.22e-05	0.0	0.0	-54.33	0.98	-0.48	3.74e-03	0.76	-1.21
		-1.21	-0.77	-4.09e-03	0.0	319.0	-47.16	0.98	-0.48	3.74e-03	-0.77	1.91
4	126	1.99	0.85	-6.47e-05	0.0	0.0	-59.06	1.02	-0.54	3.06e-03	0.85	-1.26
		-1.26	-0.87	-4.74e-03	0.0	319.0	-51.89	1.02	-0.54	3.06e-03	-0.87	1.99
4	130	1.99	0.86	-6.47e-05	0.0	0.0	-59.03	1.02	-0.54	3.06e-03	0.86	-1.26
		-1.26	-0.86	-4.28e-03	0.0	319.0	-51.85	1.02	-0.54	3.06e-03	-0.86	1.99
4	134	1.91	0.76	-6.23e-05	0.0	0.0	-54.35	0.98	-0.48	3.74e-03	0.76	-1.21
		-1.21	-0.77	-4.29e-03	0.0	319.0	-47.17	0.98	-0.48	3.74e-03	-0.77	1.91
4	136	1.92	0.76	-6.26e-05	0.0	0.0	-55.05	0.98	-0.49	3.64e-03	0.76	-1.22
		-1.22	-0.79	-4.75e-03	0.0	319.0	-47.87	0.98	-0.49	3.64e-03	-0.79	1.92
4	137	1.92	0.77	-6.26e-05	0.0	0.0	-55.02	0.98	-0.49	3.64e-03	0.77	-1.22
		-1.22	-0.78	-4.35e-03	0.0	319.0	-47.84	0.98	-0.49	3.64e-03	-0.78	1.92
4	138	1.91	0.75	-6.23e-05	0.0	0.0	-54.38	0.98	-0.48	3.73e-03	0.75	-1.21
		-1.21	-0.78	-4.75e-03	0.0	319.0	-47.20	0.98	-0.48	3.73e-03	-0.78	1.91
4	139	1.91	0.75	-6.23e-05	0.0	0.0	-54.35	0.98	-0.48	3.74e-03	0.75	-1.21
		-1.21	-0.77	-4.36e-03	0.0	319.0	-47.18	0.98	-0.48	3.74e-03	-0.77	1.91
5	7	4.87	0.10	-1.72e-04	0.0	0.0	-28.74	2.21	-0.11	-0.04	0.10	-2.18
		-2.18	-0.24	-3.80e-03	0.0	319.0	-21.57	2.21	-0.11	-0.04	-0.24	4.87
5	10	6.65	0.24	-2.35e-04	0.0	0.0	-40.81	3.00	-0.21	-0.06	0.24	-2.93
		-2.93	-0.43	-6.21e-03	0.0	319.0	-31.48	3.00	-0.21	-0.06	-0.43	6.65
5	14	6.65	0.25	-2.35e-04	0.0	0.0	-40.78	3.00	-0.21	-0.06	0.25	-2.93
		-2.93	-0.42	-5.52e-03	0.0	319.0	-31.45	3.00	-0.21	-0.06	-0.42	6.65
5	30	7.25	0.25	-6.79e-04	0.0	0.0	-32.03	4.04	-0.18	0.23	0.25	-5.65
		-5.65	-0.32	-4.33e-03	0.0	319.0	-24.85	4.04	-0.18	0.23	-0.32	7.25
5	41	5.80	2.22	-3.83e-04	0.0	0.0	-23.85	3.03	1.90	0.13	-3.85	-4.05
		-4.05	-3.85	-6.87e-03	0.0	319.0	-16.67	3.03	1.90	0.13	2.22	5.80
5	44	3.94	4.04	1.49e-04	0.0	0.0	-33.69	1.39	-2.12	-0.21	4.04	-0.31
		-0.31	-2.72	-1.91e-03	0.0	319.0	-26.52	1.39	-2.12	-0.21	-2.72	3.94
5	46	5.16	3.64	-2.17e-04	0.0	0.0	-34.71	2.36	-1.91	-0.06	3.64	-2.20
		-2.20	-2.46	-2.23e-03	0.0	319.0	-27.54	2.36	-1.91	-0.06	-2.46	5.16
5	47	4.58	1.96	-1.26e-04	0.0	0.0	-22.83	2.06	1.70	-0.02	-3.46	-2.17
		-2.17	-3.46	-6.55e-03	0.0	319.0	-15.65	2.06	1.70	-0.02	1.96	4.58
5	62	7.64	0.27	-7.72e-04	0.0	0.0	-32.55	4.34	-0.19	0.28	0.27	-6.21
		-6.21	-0.33	-4.32e-03	0.0	319.0	-25.37	4.34	-0.19	0.28	-0.33	7.64
5	73	5.95	2.62	-4.20e-04	0.0	0.0	-23.06	3.17	2.23	0.15	-4.50	-4.36
		-4.36	-4.50	-7.27e-03	0.0	319.0	-15.88	3.17	2.23	0.15	2.62	5.95
5	76	3.79	4.68	1.92e-04	0.0	0.0	-34.48	1.26	-2.45	-0.23	4.68	-8.27e-03
		-8.27e-03	-3.12	-1.51e-03	0.0	319.0	-27.30	1.26	-2.45	-0.23	-3.12	3.79
5	78	5.22	4.22	-2.25e-04	0.0	0.0	-35.67	2.39	-2.21	-0.06	4.22	-2.20
		-2.20	-2.82	-1.88e-03	0.0	319.0	-28.49	2.39	-2.21	-0.06	-2.82	5.22
5	79	4.53	2.32	-1.18e-04	0.0	0.0	-21.88	2.03	1.99	-0.02	-4.03	-2.16
		-2.16	-4.03	-6.90e-03	0.0	319.0	-14.70	2.03	1.99	-0.02	2.32	4.53
5	94	8.42	0.32	-9.56e-04	0.0	0.0	-33.63	4.94	-0.21	0.37	0.32	-7.36
		-7.36	-0.35	-4.31e-03	0.0	319.0	-26.46	4.94	-0.21	0.37	-0.35	8.42
5	105	6.28	3.43	-5.03e-04	0.0	0.0	-21.39	3.44	2.89	0.21	-5.79	-4.98
		-4.98	-5.79	-8.09e-03	0.0	319.0	-14.21	3.44	2.89	0.21	3.43	6.28
5	108	3.46	5.98	2.77e-04	0.0	0.0	-36.15	0.98	-3.11	-0.29	5.98	0.61
		0.61	-3.93	-6.90e-04	0.0	319.0	-28.98	0.98	-3.11	-0.29	-3.93	3.46
5	110	5.29	5.38	-2.39e-04	0.0	0.0	-37.68	2.44	-2.80	-0.07	5.38	-2.20
		-2.20	-3.55	-1.17e-03	0.0	319.0	-30.50	2.44	-2.80	-0.07	-3.55	5.29
5	111	4.46	3.04	-1.04e-04	0.0	0.0	-19.86	1.99	2.58	-0.02	-5.20	-2.16
		-2.16	-5.20	-7.61e-03	0.0	319.0	-12.69	1.99	2.58	-0.02	3.04	4.46
5	123	4.87	0.10	-1.72e-04	0.0	0.0	-28.76	2.21	-0.11	-0.04	0.10	-2.18
		-2.18	-0.25	-4.13e-03	0.0	319.0	-21.58	2.21	-0.11	-0.04	-0.25	4.87
5	126	5.09	0.17	-1.79e-04	0.0	0.0	-31.05	2.30	-0.15	-0.05	0.17	-2.24
		-2.24	-0.32	-4.78e-03	0.0	319.0	-23.87	2.30	-0.15	-0.05	-0.32	5.09
5	130	5.08	0.18	-1.79e-04	0.0	0.0	-31.03	2.30	-0.15	-0.05	0.18	-2.24
		-2.24	-0.31	-4.32e-03	0.0	319.0	-23.85	2.30	-0.15	-0.05	-0.31	5.08

5	134	4.87	0.09	-1.72e-04	0.0	0.0	-28.77	2.21	-0.11	-0.04	0.09	-2.18
		-2.18	-0.25	-4.32e-03	0.0	319.0	-21.59	2.21	-0.11	-0.04	-0.25	4.87
5	136	4.90	0.10	-1.73e-04	0.0	0.0	-29.11	2.23	-0.11	-0.04	0.10	-2.19
		-2.19	-0.27	-4.78e-03	0.0	319.0	-21.93	2.23	-0.11	-0.04	-0.27	4.90
5	137	4.90	0.11	-1.73e-04	0.0	0.0	-29.09	2.22	-0.11	-0.04	0.11	-2.19
		-2.19	-0.26	-4.39e-03	0.0	319.0	-21.91	2.22	-0.11	-0.04	-0.26	4.90
5	138	4.87	0.09	-1.72e-04	0.0	0.0	-28.79	2.21	-0.11	-0.04	0.09	-2.19
		-2.19	-0.26	-4.78e-03	0.0	319.0	-21.61	2.21	-0.11	-0.04	-0.26	4.87
5	139	4.87	0.09	-1.72e-04	0.0	0.0	-28.77	2.21	-0.11	-0.04	0.09	-2.18
		-2.18	-0.25	-4.39e-03	0.0	319.0	-21.59	2.21	-0.11	-0.04	-0.25	4.87
22	7	-0.59	-0.25	-9.41e-05	0.0	0.0	-15.87	9.66	-0.12	0.05	-0.25	-4.93
		-4.93	-0.30	-5.40e-04	0.0	45.0	-14.85	9.66	-0.12	0.05	-0.30	-0.59
22	10	-1.42	-0.44	-1.29e-04	0.0	0.0	-24.07	11.83	-0.22	0.07	-0.44	-6.74
		-6.74	-0.54	-8.82e-04	0.0	45.0	-22.75	11.83	-0.22	0.07	-0.54	-1.42
22	25	1.84	0.02	-1.51e-04	0.0	0.0	-13.10	9.16	-0.45	0.33	-0.14	-2.66
		-2.66	-0.14	-6.38e-04	0.0	45.0	-12.08	9.16	-0.45	0.33	0.02	1.84
22	28	-3.03	-0.37	-3.78e-05	0.0	0.0	-18.69	10.14	0.21	-0.23	-0.37	-7.21
		-7.21	-0.65	-6.09e-04	0.0	45.0	-17.68	10.14	0.21	-0.23	-0.65	-3.03
22	50	-0.15	-2.77	-1.34e-04	0.0	0.0	-20.10	8.74	-0.64	0.21	-2.77	-4.01
		-4.01	-2.93	-2.99e-04	0.0	45.0	-19.09	8.74	-0.64	0.21	-2.93	-0.15
22	51	-1.04	2.31	-5.41e-05	0.0	0.0	-11.69	10.56	0.41	-0.11	2.25	-5.87
		-5.87	2.25	-9.47e-04	0.0	45.0	-10.67	10.56	0.41	-0.11	2.31	-1.04
22	53	0.22	2.16	-8.73e-05	0.0	0.0	-10.80	10.19	0.12	0.04	2.01	-4.70
		-4.70	2.01	-9.08e-04	0.0	45.0	-9.79	10.19	0.12	0.04	2.16	0.22
22	56	-1.41	-2.52	-1.01e-04	0.0	0.0	-20.98	9.11	-0.36	0.06	-2.52	-5.17
		-5.17	-2.78	-3.38e-04	0.0	45.0	-19.97	9.11	-0.36	0.06	-2.78	-1.41
22	57	2.24	0.08	-1.60e-04	0.0	0.0	-12.65	9.09	-0.49	0.37	-0.12	-2.29
		-2.29	-0.12	-6.40e-04	0.0	45.0	-11.63	9.09	-0.49	0.37	0.08	2.24
22	60	-3.43	-0.39	-2.86e-05	0.0	0.0	-19.14	10.21	0.26	-0.27	-0.39	-7.58
		-7.58	-0.70	-6.06e-04	0.0	45.0	-18.13	10.21	0.26	-0.27	-0.70	-3.43
22	82	-0.07	-3.18	-1.41e-04	0.0	0.0	-20.77	8.61	-0.72	0.24	-3.18	-3.86
		-3.86	-3.35	-2.47e-04	0.0	45.0	-19.76	8.61	-0.72	0.24	-3.35	-0.07
22	83	-1.11	2.73	-4.75e-05	0.0	0.0	-11.02	10.69	0.49	-0.14	2.66	-6.01
		-6.01	2.66	-1.00e-03	0.0	45.0	-10.00	10.69	0.49	-0.14	2.73	-1.11
22	85	0.35	2.56	-8.62e-05	0.0	0.0	-9.99	10.26	0.16	0.04	2.37	-4.65
		-4.65	2.37	-9.55e-04	0.0	45.0	-8.98	10.26	0.16	0.04	2.56	0.35
22	88	-1.54	-2.89	-1.02e-04	0.0	0.0	-21.80	9.04	-0.40	0.06	-2.89	-5.22
		-5.22	-3.18	-2.92e-04	0.0	45.0	-20.78	9.04	-0.40	0.06	-3.18	-1.54
22	89	3.05	0.19	-1.78e-04	0.0	0.0	-11.71	8.88	-0.61	0.46	-0.09	-1.53
		-1.53	-0.09	-6.45e-04	0.0	45.0	-10.70	8.88	-0.61	0.46	0.19	3.05
22	92	-4.23	-0.43	-1.01e-05	0.0	0.0	-20.07	10.42	0.37	-0.37	-0.43	-8.34
		-8.34	-0.81	-6.02e-04	0.0	45.0	-19.06	10.42	0.37	-0.37	-0.81	-4.23
22	114	0.08	-4.00	-1.54e-04	0.0	0.0	-22.14	8.22	-0.90	0.29	-4.00	-3.53
		-3.53	-4.22	-1.40e-04	0.0	45.0	-21.13	8.22	-0.90	0.29	-4.22	0.08
22	115	-1.27	3.59	-3.44e-05	0.0	0.0	-9.64	11.08	0.66	-0.19	3.48	-6.34
		-6.34	3.48	-1.11e-03	0.0	45.0	-8.63	11.08	0.66	-0.19	3.59	-1.27
22	117	0.61	3.37	-8.39e-05	0.0	0.0	-8.32	10.49	0.24	0.03	3.12	-4.60
		-4.60	3.12	-1.05e-03	0.0	45.0	-7.30	10.49	0.24	0.03	3.37	0.61
22	120	-1.80	-3.63	-1.04e-04	0.0	0.0	-23.47	8.81	-0.48	0.07	-3.63	-5.28
		-5.28	-3.99	-1.98e-04	0.0	45.0	-22.46	8.81	-0.48	0.07	-3.99	-1.80
22	123	-0.59	-0.25	-9.41e-05	0.0	0.0	-15.88	9.65	-0.12	0.05	-0.25	-4.93
		-4.93	-0.31	-5.86e-04	0.0	45.0	-14.87	9.65	-0.12	0.05	-0.31	-0.59
22	126	-1.02	-0.33	-9.88e-05	0.0	0.0	-18.17	9.17	-0.17	0.06	-0.33	-5.15
		-5.15	-0.40	-6.79e-04	0.0	45.0	-17.16	9.17	-0.17	0.06	-0.40	-1.02
22	134	-0.59	-0.26	-9.42e-05	0.0	0.0	-15.89	9.65	-0.12	0.05	-0.26	-4.94
		-4.94	-0.31	-6.14e-04	0.0	45.0	-14.88	9.65	-0.12	0.05	-0.31	-0.59
22	136	-0.66	-0.27	-9.48e-05	0.0	0.0	-16.23	9.58	-0.12	0.05	-0.27	-4.97
		-4.97	-0.33	-6.79e-04	0.0	45.0	-15.22	9.58	-0.12	0.05	-0.33	-0.66
22	138	-0.60	-0.26	-9.42e-05	0.0	0.0	-15.91	9.65	-0.12	0.05	-0.26	-4.94
		-4.94	-0.32	-6.79e-04	0.0	45.0	-14.90	9.65	-0.12	0.05	-0.32	-0.60
22	139	-0.59	-0.26	-9.42e-05	0.0	0.0	-15.89	9.65	-0.12	0.05	-0.26	-4.94
		-4.94	-0.31	-6.23e-04	0.0	45.0	-14.88	9.65	-0.12	0.05	-0.31	-0.59
23	3	2.60	-0.97	-4.96e-05	0.0	0.0	-45.52	-1.38	-0.60	0.01	-0.97	2.60
		1.98	-1.24	-7.47e-04	0.0	45.0	-44.20	-1.38	-0.60	0.01	-1.24	1.98
23	5	2.00	-0.76	-3.82e-05	0.0	0.0	-35.07	-1.06	-0.46	8.77e-03	-0.76	2.00
		1.52	-0.96	-6.82e-04	0.0	45.0	-34.06	-1.06	-0.46	8.77e-03	-0.96	1.52
23	7	2.00	-0.74	-3.82e-05	0.0	0.0	-35.00	-1.06	-0.46	8.76e-03	-0.74	2.00
		1.52	-0.95	-5.43e-04	0.0	45.0	-33.98	-1.06	-0.46	8.76e-03	-0.95	1.52
23	10	2.51	-1.12	-5.18e-05	0.0	0.0	-52.61	-1.15	-0.69	0.01	-1.12	2.51
		1.99	-1.43	-8.87e-04	0.0	45.0	-51.29	-1.15	-0.69	0.01	-1.43	1.99
23	30	5.35	-1.48	-9.95e-05	0.0	0.0	-36.52	2.27	0.51	0.77	-1.48	4.36
		4.36	-1.48	-5.02e-04	0.0	45.0	-35.50	2.27	0.51	0.77	-1.48	5.35
23	31	-0.36	-0.02	2.32e-05	0.0	0.0	-33.57	-4.40	-1.43	-0.75	-0.02	-0.36
		-2.31	-0.44	-7.51e-04	0.0	45.0	-32.55	-4.40	-1.43	-0.75	-0.44	-2.31
23	53	1.87	2.17	-4.03e-05	0.0	0.0	-25.81	-1.51	-0.75	-0.90	2.17	1.87
		1.20	1.78	-9.03e-04	0.0	45.0	-24.79	-1.51	-0.75	-0.90	1.78	1.20
23	56	2.13	-3.67	-3.60e-05	0.0	0.0	-44.28	-0.61	-0.16	0.91	-3.67	2.13
		1.84	-3.69	-3.50e-04	0.0	45.0	-43.26	-0.61	-0.16	0.91	-3.69	1.84

23	62	5.98	-1.56	-1.10e-04	0.0	0.0	-36.75	2.82	0.67	0.89	-1.60	4.74
		4.74	-1.60	-4.82e-04	0.0	45.0	-35.74	2.82	0.67	0.89	-1.56	5.98
23	63	-0.74	0.10	3.32e-05	0.0	0.0	-33.33	-4.94	-1.58	-0.87	0.10	-0.74
		-2.93	-0.35	-7.71e-04	0.0	45.0	-32.32	-4.94	-1.58	-0.87	-0.35	-2.93
23	85	1.85	2.64	-4.07e-05	0.0	0.0	-24.33	-1.58	-0.80	-1.04	2.64	1.85
		1.15	2.22	-9.48e-04	0.0	45.0	-23.32	-1.58	-0.80	-1.04	2.22	1.15
23	88	2.15	-4.14	-3.57e-05	0.0	0.0	-45.75	-0.54	-0.12	1.06	-4.15	2.15
		1.89	-4.15	-3.04e-04	0.0	45.0	-44.74	-0.54	-0.12	1.06	-4.14	1.89
23	94	7.24	-1.73	-1.30e-04	0.0	0.0	-37.24	3.93	0.99	1.14	-1.84	5.52
		5.52	-1.84	-4.41e-04	0.0	45.0	-36.22	3.93	0.99	1.14	-1.73	7.24
23	95	-1.52	0.34	5.34e-05	0.0	0.0	-32.85	-6.05	-1.91	-1.12	0.34	-1.52
		-4.20	-0.18	-8.12e-04	0.0	45.0	-31.83	-6.05	-1.91	-1.12	-0.18	-4.20
23	117	1.80	3.60	-4.14e-05	0.0	0.0	-21.29	-1.73	-0.89	-1.34	3.60	1.80
		1.05	3.12	-1.04e-03	0.0	45.0	-20.28	-1.73	-0.89	-1.34	3.12	1.05
23	120	2.20	-5.04	-3.50e-05	0.0	0.0	-48.79	-0.40	-0.02	1.36	-5.10	2.20
		1.99	-5.10	-2.13e-04	0.0	45.0	-47.78	-0.40	-0.02	1.36	-5.04	1.99
23	121	2.00	-0.76	-3.82e-05	0.0	0.0	-35.07	-1.06	-0.46	8.77e-03	-0.76	2.00
		1.52	-0.96	-6.82e-04	0.0	45.0	-34.06	-1.06	-0.46	8.77e-03	-0.96	1.52
23	123	2.00	-0.75	-3.82e-05	0.0	0.0	-35.02	-1.06	-0.46	8.76e-03	-0.75	2.00
		1.52	-0.95	-5.89e-04	0.0	45.0	-34.01	-1.06	-0.46	8.76e-03	-0.95	1.52
23	126	1.94	-0.85	-3.96e-05	0.0	0.0	-39.75	-0.91	-0.52	9.60e-03	-0.85	1.94
		1.53	-1.08	-6.82e-04	0.0	45.0	-38.74	-0.91	-0.52	9.60e-03	-1.08	1.53
23	133	2.00	-0.76	-3.82e-05	0.0	0.0	-35.07	-1.06	-0.46	8.77e-03	-0.76	2.00
		1.52	-0.96	-6.82e-04	0.0	45.0	-34.06	-1.06	-0.46	8.77e-03	-0.96	1.52
23	134	2.00	-0.75	-3.82e-05	0.0	0.0	-35.04	-1.06	-0.46	8.76e-03	-0.75	2.00
		1.52	-0.96	-6.17e-04	0.0	45.0	-34.02	-1.06	-0.46	8.76e-03	-0.96	1.52
23	136	1.99	-0.77	-3.84e-05	0.0	0.0	-35.73	-1.04	-0.47	8.89e-03	-0.77	1.99
		1.52	-0.98	-6.82e-04	0.0	45.0	-34.72	-1.04	-0.47	8.89e-03	-0.98	1.52
23	138	2.00	-0.76	-3.82e-05	0.0	0.0	-35.07	-1.06	-0.46	8.77e-03	-0.76	2.00
		1.52	-0.96	-6.82e-04	0.0	45.0	-34.06	-1.06	-0.46	8.77e-03	-0.96	1.52
23	139	2.00	-0.75	-3.82e-05	0.0	0.0	-35.04	-1.06	-0.46	8.77e-03	-0.75	2.00
		1.52	-0.96	-6.26e-04	0.0	45.0	-34.03	-1.06	-0.46	8.77e-03	-0.96	1.52
24	7	1.39	-0.84	-2.52e-05	0.0	0.0	-36.37	6.17	-0.56	0.02	-0.84	-1.39
		-1.39	-1.09	-5.42e-04	0.0	45.0	-35.35	6.17	-0.56	0.02	-1.09	1.39
24	10	1.82	-1.24	-3.30e-05	0.0	0.0	-54.62	8.07	-0.81	0.02	-1.24	-1.81
		-1.81	-1.61	-8.86e-04	0.0	45.0	-53.31	8.07	-0.81	0.02	-1.61	1.82
24	28	-1.83	-1.69	2.54e-05	0.0	0.0	-38.93	6.69	-0.84	-0.28	-1.69	-4.50
		-4.50	-1.93	-5.43e-04	0.0	45.0	-37.92	6.69	-0.84	-0.28	-1.93	-1.83
24	30	4.68	-1.59	-7.68e-05	0.0	0.0	-39.19	5.78	-0.47	0.32	-1.59	1.68
		1.68	-1.85	-5.42e-04	0.0	45.0	-38.17	5.78	-0.47	0.32	-1.85	4.68
24	45	3.07	1.82	-4.69e-05	0.0	0.0	-27.63	6.42	-0.18	0.19	1.82	0.33
		0.33	1.55	-9.03e-04	0.0	45.0	-26.62	6.42	-0.18	0.19	1.55	3.07
24	50	3.33	-3.47	-5.02e-05	0.0	0.0	-45.29	6.84	-0.86	0.18	-3.47	0.18
		0.18	-3.72	-3.47e-04	0.0	45.0	-44.28	6.84	-0.86	0.18	-3.72	3.33
24	51	-0.55	1.77	1.98e-06	0.0	0.0	-27.53	5.51	-0.25	-0.15	1.77	-2.95
		-2.95	1.53	-9.04e-04	0.0	45.0	-26.52	5.51	-0.25	-0.15	1.53	-0.55
24	52	1.55	-3.49	-2.12e-05	0.0	0.0	-45.22	7.22	-0.98	0.02	-3.49	-1.53
		-1.53	-3.75	-3.48e-04	0.0	45.0	-44.21	7.22	-0.98	0.02	-3.75	1.55
24	60	-2.35	-1.83	3.37e-05	0.0	0.0	-39.34	6.77	-0.89	-0.33	-1.83	-5.01
		-5.01	-2.07	-5.29e-04	0.0	45.0	-38.32	6.77	-0.89	-0.33	-2.07	-2.35
24	62	5.22	-1.71	-8.52e-05	0.0	0.0	-39.63	5.73	-0.46	0.37	-1.71	2.18
		2.18	-1.97	-5.28e-04	0.0	45.0	-38.61	5.73	-0.46	0.37	-1.97	5.22
24	77	3.35	2.26	-5.05e-05	0.0	0.0	-26.23	6.45	-0.13	0.21	2.26	0.61
		0.61	1.98	-9.49e-04	0.0	45.0	-25.22	6.45	-0.13	0.21	1.98	3.35
24	82	3.65	-3.89	-5.43e-05	0.0	0.0	-46.71	6.94	-0.90	0.21	-3.89	0.44
		0.44	-4.15	-3.02e-04	0.0	45.0	-45.70	6.94	-0.90	0.21	-4.15	3.65
24	83	-0.87	2.19	4.57e-06	0.0	0.0	-26.12	5.40	-0.21	-0.17	2.19	-3.21
		-3.21	1.95	-9.49e-04	0.0	45.0	-25.10	5.40	-0.21	-0.17	1.95	-0.87
24	84	1.57	-3.92	-2.05e-05	0.0	0.0	-46.63	7.39	-1.03	0.02	-3.92	-1.55
		-1.55	-4.18	-3.02e-04	0.0	45.0	-45.61	7.39	-1.03	0.02	-4.18	1.57
24	92	-3.42	-2.11	5.03e-05	0.0	0.0	-40.15	7.02	-0.96	-0.43	-2.11	-6.04
		-6.04	-2.34	-5.02e-04	0.0	45.0	-39.14	7.02	-0.96	-0.43	-2.34	-3.42
24	94	6.30	-1.96	-1.02e-04	0.0	0.0	-40.56	5.52	-0.44	0.46	-1.96	3.19
		3.19	-2.22	-5.00e-04	0.0	45.0	-39.54	5.52	-0.44	0.46	-2.22	6.30
24	105	3.95	3.14	-5.81e-05	0.0	0.0	-23.36	6.51	-0.03	0.27	3.14	1.22
		1.22	2.84	-1.04e-03	0.0	45.0	-22.34	6.51	-0.03	0.27	2.84	3.95
24	114	4.29	-4.75	-6.26e-05	0.0	0.0	-49.64	7.14	-0.98	0.26	-4.75	0.95
		0.95	-5.01	-2.10e-04	0.0	45.0	-48.63	7.14	-0.98	0.26	-5.01	4.29
24	115	-1.51	3.05	1.21e-05	0.0	0.0	-23.18	5.20	-0.13	-0.23	3.05	-3.72
		-3.72	2.82	-1.04e-03	0.0	45.0	-22.17	5.20	-0.13	-0.23	2.82	-1.51
24	116	1.62	-4.79	-1.92e-05	0.0	0.0	-49.53	7.76	-1.14	0.02	-4.79	-1.60
		-1.60	-5.05	-2.11e-04	0.0	45.0	-48.52	7.76	-1.14	0.02	-5.05	1.62
24	123	1.39	-0.84	-2.52e-05	0.0	0.0	-36.39	6.17	-0.56	0.02	-0.84	-1.39
		-1.39	-1.09	-5.89e-04	0.0	45.0	-35.38	6.17	-0.56	0.02	-1.09	1.39
24	126	1.40	-0.94	-2.54e-05	0.0	0.0	-41.27	6.20	-0.62	0.02	-0.94	-1.39
		-1.39	-1.22	-6.81e-04	0.0	45.0	-40.26	6.20	-0.62	0.02	-1.22	1.40
24	134	1.39	-0.85	-2.52e-05	0.0	0.0	-36.41	6.17	-0.56	0.02	-0.85	-1.39
		-1.39	-1.10	-6.16e-04	0.0	45.0	-35.39	6.17	-0.56	0.02	-1.10	1.39

24	136	1.39	-0.87	-2.53e-05	0.0	0.0	-37.13	6.18	-0.57	0.02	-0.87	-1.39
		-1.39	-1.12	-6.81e-04	0.0	45.0	-36.12	6.18	-0.57	0.02	-1.12	1.39
24	138	1.39	-0.85	-2.52e-05	0.0	0.0	-36.44	6.17	-0.56	0.02	-0.85	-1.39
		-1.39	-1.11	-6.81e-04	0.0	45.0	-35.43	6.17	-0.56	0.02	-1.11	1.39
24	139	1.39	-0.85	-2.52e-05	0.0	0.0	-36.41	6.17	-0.56	0.02	-0.85	-1.39
		-1.39	-1.10	-6.26e-04	0.0	45.0	-35.40	6.17	-0.56	0.02	-1.10	1.39
25	7	1.91	-0.77	3.07e-05	0.0	0.0	-35.27	-6.78	-0.48	3.90e-03	-0.77	1.91
		-1.14	-0.98	-5.44e-04	0.0	45.0	-34.26	-6.78	-0.48	3.90e-03	-0.98	-1.14
25	10	2.61	-1.16	4.21e-05	0.0	0.0	-52.97	-9.11	-0.71	3.92e-03	-1.16	2.61
		-1.49	-1.48	-8.88e-04	0.0	45.0	-51.65	-9.11	-0.71	3.92e-03	-1.48	-1.49
25	14	2.61	-1.15	4.21e-05	0.0	0.0	-52.92	-9.11	-0.71	3.93e-03	-1.15	2.61
		-1.49	-1.47	-7.91e-04	0.0	45.0	-51.60	-9.11	-0.71	3.93e-03	-1.47	-1.49
25	28	-0.79	-1.51	8.67e-05	0.0	0.0	-36.75	-8.48	0.52	-0.29	-1.51	-0.79
		-4.55	-1.51	-5.04e-04	0.0	45.0	-35.73	-8.48	0.52	-0.29	-1.51	-4.55
25	30	4.72	-1.65	-2.33e-05	0.0	0.0	-39.05	-5.37	-1.42	0.29	-1.65	4.72
		2.17	-2.04	-5.85e-04	0.0	45.0	-38.03	-5.37	-1.42	0.29	-2.04	2.17
25	46	2.12	-3.68	2.87e-05	0.0	0.0	-44.51	-7.86	-0.13	-3.29e-03	-3.68	2.12
		-1.39	-3.76	-3.51e-04	0.0	45.0	-43.50	-7.86	-0.13	-3.29e-03	-3.76	-1.39
25	47	1.71	2.12	3.28e-05	0.0	0.0	-26.12	-5.71	-0.82	0.01	2.12	1.71
		-0.89	1.77	-9.04e-04	0.0	45.0	-25.10	-5.71	-0.82	0.01	1.77	-0.89
25	60	-1.23	-1.60	9.59e-05	0.0	0.0	-36.98	-8.76	0.68	-0.34	-1.63	-1.23
		-5.11	-1.63	-4.83e-04	0.0	45.0	-35.97	-8.76	0.68	-0.34	-1.60	-5.11
25	62	5.18	-1.79	-3.22e-05	0.0	0.0	-39.64	-5.14	-1.56	0.34	-1.79	5.18
		2.71	-2.21	-5.78e-04	0.0	45.0	-38.63	-5.14	-1.56	0.34	-2.21	2.71
25	78	2.15	-4.15	2.84e-05	0.0	0.0	-45.99	-8.03	-0.08	-4.44e-03	-4.15	2.15
		-1.43	-4.20	-3.05e-04	0.0	45.0	-44.97	-8.03	-0.08	-4.44e-03	-4.20	-1.43
25	79	1.67	2.60	3.31e-05	0.0	0.0	-24.64	-5.53	-0.87	0.01	2.60	1.67
		-0.85	2.22	-9.49e-04	0.0	45.0	-23.63	-5.53	-0.87	0.01	2.22	-0.85
25	92	-2.12	-1.76	1.14e-04	0.0	0.0	-37.45	-9.35	1.00	-0.43	-1.87	-2.12
		-6.24	-1.87	-4.42e-04	0.0	45.0	-36.44	-9.35	1.00	-0.43	-1.76	-6.24
25	94	6.10	-2.08	-4.99e-05	0.0	0.0	-40.88	-4.64	-1.86	0.44	-2.08	6.10
		3.80	-2.55	-5.64e-04	0.0	45.0	-39.87	-4.64	-1.86	0.44	-2.55	3.80
25	110	2.22	-5.10	2.77e-05	0.0	0.0	-49.03	-8.39	0.01	-6.78e-03	-5.10	2.22
		-1.51	-5.11	-2.14e-04	0.0	45.0	-48.02	-8.39	0.01	-6.78e-03	-5.11	-1.51
25	111	1.60	3.55	3.37e-05	0.0	0.0	-21.59	-5.18	-0.97	0.01	3.55	1.60
		-0.77	3.12	-1.04e-03	0.0	45.0	-20.58	-5.18	-0.97	0.01	3.12	-0.77
25	123	1.91	-0.77	3.07e-05	0.0	0.0	-35.29	-6.78	-0.48	3.90e-03	-0.77	1.91
		-1.14	-0.99	-5.90e-04	0.0	45.0	-34.28	-6.78	-0.48	3.90e-03	-0.99	-1.14
25	126	1.99	-0.88	3.22e-05	0.0	0.0	-40.02	-6.98	-0.54	3.13e-03	-0.88	1.99
		-1.15	-1.12	-6.83e-04	0.0	45.0	-39.01	-6.98	-0.54	3.13e-03	-1.12	-1.15
25	130	1.99	-0.87	3.22e-05	0.0	0.0	-39.99	-6.98	-0.54	3.14e-03	-0.87	1.99
		-1.15	-1.11	-6.18e-04	0.0	45.0	-38.98	-6.98	-0.54	3.14e-03	-1.11	-1.15
25	134	1.91	-0.78	3.07e-05	0.0	0.0	-35.31	-6.78	-0.48	3.89e-03	-0.78	1.91
		-1.14	-0.99	-6.18e-04	0.0	45.0	-34.30	-6.78	-0.48	3.89e-03	-0.99	-1.14
25	136	1.92	-0.80	3.09e-05	0.0	0.0	-36.01	-6.81	-0.49	3.78e-03	-0.80	1.92
		-1.14	-1.02	-6.83e-04	0.0	45.0	-35.00	-6.81	-0.49	3.78e-03	-1.02	-1.14
25	137	1.92	-0.79	3.09e-05	0.0	0.0	-35.98	-6.81	-0.49	3.79e-03	-0.79	1.92
		-1.14	-1.01	-6.27e-04	0.0	45.0	-34.97	-6.81	-0.49	3.79e-03	-1.01	-1.14
25	138	1.91	-0.78	3.07e-05	0.0	0.0	-35.34	-6.78	-0.48	3.89e-03	-0.78	1.91
		-1.14	-1.00	-6.83e-04	0.0	45.0	-34.33	-6.78	-0.48	3.89e-03	-1.00	-1.14
25	139	1.91	-0.78	3.07e-05	0.0	0.0	-35.31	-6.78	-0.48	3.89e-03	-0.78	1.91
		-1.14	-0.99	-6.27e-04	0.0	45.0	-34.30	-6.78	-0.48	3.89e-03	-0.99	-1.14
26	7	4.87	-0.24	9.11e-05	0.0	0.0	-15.89	-9.24	-0.11	-0.04	-0.24	4.87
		0.71	-0.29	-5.42e-04	0.0	45.0	-14.87	-9.24	-0.11	-0.04	-0.29	0.71
26	10	6.65	-0.43	1.25e-04	0.0	0.0	-24.10	-11.28	-0.21	-0.06	-0.43	6.65
		1.58	-0.52	-8.85e-04	0.0	45.0	-22.78	-11.28	-0.21	-0.06	-0.52	1.58
26	30	7.25	-0.37	3.63e-05	0.0	0.0	-18.66	-9.44	0.19	0.24	-0.37	7.25
		3.06	-0.64	-6.10e-04	0.0	45.0	-17.64	-9.44	0.19	0.24	-0.64	3.06
26	31	2.50	0.04	1.46e-04	0.0	0.0	-13.17	-9.03	-0.41	-0.32	-0.13	2.50
		-1.63	-0.13	-6.40e-04	0.0	45.0	-12.16	-9.03	-0.41	-0.32	0.04	-1.63
26	41	5.80	2.33	5.20e-05	0.0	0.0	-11.73	-9.91	0.39	0.12	2.26	5.80
		1.15	2.26	-9.49e-04	0.0	45.0	-10.72	-9.91	0.39	0.12	2.33	1.15
26	44	3.94	-2.76	1.30e-04	0.0	0.0	-20.10	-8.56	-0.61	-0.20	-2.76	3.94
		0.29	-2.92	-3.01e-04	0.0	45.0	-19.09	-8.56	-0.61	-0.20	-2.92	0.29
26	46	5.16	-2.52	9.79e-05	0.0	0.0	-20.95	-8.80	-0.34	-0.05	-2.52	5.16
		1.49	-2.77	-3.40e-04	0.0	45.0	-19.94	-8.80	-0.34	-0.05	-2.77	1.49
26	47	4.58	2.18	8.43e-05	0.0	0.0	-10.88	-9.67	0.13	-0.03	2.02	4.58
		-0.06	2.02	-9.10e-04	0.0	45.0	-9.86	-9.67	0.13	-0.03	2.18	-0.06
26	62	7.64	-0.39	2.73e-05	0.0	0.0	-19.10	-9.47	0.23	0.28	-0.39	7.64
		3.44	-0.69	-6.08e-04	0.0	45.0	-18.08	-9.47	0.23	0.28	-0.69	3.44
26	63	2.11	0.10	1.55e-04	0.0	0.0	-12.73	-9.00	-0.45	-0.36	-0.11	2.11
		-2.01	-0.11	-6.42e-04	0.0	45.0	-11.72	-9.00	-0.45	-0.36	0.10	-2.01
26	73	5.95	2.75	4.55e-05	0.0	0.0	-11.06	-10.01	0.47	0.15	2.67	5.95
		1.22	2.67	-1.00e-03	0.0	45.0	-10.04	-10.01	0.47	0.15	2.75	1.22
26	76	3.79	-3.17	1.37e-04	0.0	0.0	-20.77	-8.46	-0.69	-0.23	-3.17	3.79
		0.21	-3.34	-2.48e-04	0.0	45.0	-19.76	-8.46	-0.69	-0.23	-3.34	0.21
26	78	5.22	-2.89	9.91e-05	0.0	0.0	-21.76	-8.74	-0.38	-0.05	-2.89	5.22
		1.62	-3.17	-2.93e-04	0.0	45.0	-20.75	-8.74	-0.38	-0.05	-3.17	1.62

26	79	4.53	2.58	8.32e-05	0.0	0.0	-10.07	-9.73	0.17	-0.03	2.39	4.53
		-0.18	2.39	-9.57e-04	0.0	45.0	-9.05	-9.73	0.17	-0.03	2.58	-0.18
26	94	8.42	-0.42	9.26e-06	0.0	0.0	-20.01	-9.58	0.35	0.37	-0.42	8.42
		4.21	-0.80	-6.03e-04	0.0	45.0	-18.99	-9.58	0.35	0.37	-0.80	4.21
26	95	1.32	0.21	1.73e-04	0.0	0.0	-11.82	-8.89	-0.56	-0.46	-0.07	1.32
		-2.78	-0.07	-6.47e-04	0.0	45.0	-10.81	-8.89	-0.56	-0.46	0.21	-2.78
26	105	6.28	3.61	3.26e-05	0.0	0.0	-9.68	-10.33	0.64	0.20	3.49	6.28
		1.37	3.49	-1.11e-03	0.0	45.0	-8.66	-10.33	0.64	0.20	3.61	1.37
26	108	3.46	-3.99	1.50e-04	0.0	0.0	-22.15	-8.14	-0.86	-0.28	-3.99	3.46
		0.06	-4.21	-1.42e-04	0.0	45.0	-21.14	-8.14	-0.86	-0.28	-4.21	0.06
26	110	5.29	-3.63	1.01e-04	0.0	0.0	-23.43	-8.53	-0.46	-0.06	-3.63	5.29
		1.87	-3.98	-1.99e-04	0.0	45.0	-22.41	-8.53	-0.46	-0.06	-3.98	1.87
26	111	4.46	3.39	8.10e-05	0.0	0.0	-8.40	-9.94	0.24	-0.02	3.13	4.46
		-0.43	3.13	-1.05e-03	0.0	45.0	-7.39	-9.94	0.24	-0.02	3.39	-0.43
26	123	4.87	-0.24	9.11e-05	0.0	0.0	-15.90	-9.24	-0.11	-0.04	-0.24	4.87
		0.71	-0.29	-5.88e-04	0.0	45.0	-14.89	-9.24	-0.11	-0.04	-0.29	0.71
26	126	5.09	-0.32	9.58e-05	0.0	0.0	-18.19	-8.75	-0.15	-0.05	-0.32	5.09
		1.15	-0.39	-6.81e-04	0.0	45.0	-17.18	-8.75	-0.15	-0.05	-0.39	1.15
26	134	4.87	-0.25	9.11e-05	0.0	0.0	-15.91	-9.24	-0.11	-0.04	-0.25	4.87
		0.72	-0.30	-6.16e-04	0.0	45.0	-14.90	-9.24	-0.11	-0.04	-0.30	0.72
26	136	4.90	-0.26	9.18e-05	0.0	0.0	-16.25	-9.16	-0.11	-0.04	-0.26	4.90
		0.78	-0.32	-6.81e-04	0.0	45.0	-15.24	-9.16	-0.11	-0.04	-0.32	0.78
26	138	4.87	-0.25	9.12e-05	0.0	0.0	-15.93	-9.23	-0.11	-0.04	-0.25	4.87
		0.72	-0.30	-6.81e-04	0.0	45.0	-14.92	-9.23	-0.11	-0.04	-0.30	0.72
26	139	4.87	-0.25	9.11e-05	0.0	0.0	-15.91	-9.23	-0.11	-0.04	-0.25	4.87
		0.72	-0.30	-6.25e-04	0.0	45.0	-14.90	-9.23	-0.11	-0.04	-0.30	0.72

Pilas.	**M3 mx/mn**	**M2 mx/mn**	**D 2 / D 3**	**Q 2 / Q 3**	**N**	**V 2**	**V 3**	**T**
	-8.34	-5.79	-8.09e-03	0.0	-78.77	-11.28	-3.55	-1.34
	8.42	6.57	9.44e-04	0.0	-7.30	11.83	2.89	1.36

Trave	**Cmb**	**M3 mx/mn**	**M2 mx/mn**	**D 2 / D 3**	**Q 2 / Q 3**	**Pos.**	**N**	**V 2**	**V 3**	**T**	**M 2**	**M 3**
		kN m	kN m	m	kN	cm	kN	kN	kN	kN m	kN m	kN m
6	3	0.0	0.0	-2.06e-04	-6.03	0.0	-16.79	7.92	6.98e-05	1.73e-03	-9.64e-05	-6.77
		-6.77	-9.64e-05	-1.93e-04	0.0	138.0	-16.29	1.89	6.98e-05	1.73e-03	0.0	0.0
6	5	0.0	0.0	-1.59e-04	-4.64	0.0	-12.91	6.09	5.38e-05	1.33e-03	-7.42e-05	-5.21
		-5.21	-7.42e-05	-1.75e-04	0.0	138.0	-12.53	1.45	5.38e-05	1.33e-03	0.0	0.0
6	8	0.0	0.0	-1.61e-04	-4.64	0.0	-12.81	6.10	5.71e-05	1.42e-03	-7.87e-05	-5.22
		-5.22	-7.87e-05	-1.40e-04	0.0	138.0	-12.43	1.46	5.71e-05	1.42e-03	0.0	0.0
6	10	0.0	0.0	-2.12e-04	-6.03	0.0	-16.50	7.95	7.93e-05	1.97e-03	-1.09e-04	-6.81
		-6.81	-1.09e-04	-2.28e-04	0.0	138.0	-16.00	1.92	7.93e-05	1.97e-03	0.0	0.0
6	16	0.0	0.0	-1.65e-04	-4.64	0.0	-12.63	6.13	6.32e-05	1.57e-03	-8.72e-05	-5.25
		-5.25	-8.72e-05	-1.75e-04	0.0	138.0	-12.24	1.48	6.32e-05	1.57e-03	0.0	0.0
6	41	0.0	0.0	-2.51e-04	-4.64	0.0	-14.09	5.67	0.53	-0.06	-0.74	-4.62
		-4.62	-0.74	-3.60e-04	0.0	138.0	-13.70	1.03	0.53	-0.06	0.0	0.0
6	44	0.0	0.74	-6.64e-05	-4.64	0.0	-11.74	6.52	-0.53	0.07	0.74	-5.79
		-5.79	0.0	3.77e-05	0.0	138.0	-11.36	1.87	-0.53	0.07	0.0	0.0
6	50	0.0	1.15	-2.79e-04	-4.64	0.0	-14.65	5.68	-0.84	-0.01	1.15	-4.63
		-4.63	0.0	-1.67e-05	0.0	138.0	-14.27	1.04	-0.84	-0.01	0.0	0.0
6	51	0.0	0.0	-3.84e-05	-4.64	0.0	-11.18	6.51	0.84	0.02	-1.15	-5.78
		-5.78	-1.15	-3.24e-04	0.0	138.0	-10.80	1.87	0.84	0.02	0.0	0.0
6	73	0.0	0.0	-2.66e-04	-4.64	0.0	-14.26	5.61	0.62	-0.07	-0.85	-4.53
		-4.53	-0.85	-3.92e-04	0.0	138.0	-13.88	0.97	0.62	-0.07	0.0	0.0
6	76	0.0	0.85	-5.12e-05	-4.64	0.0	-11.57	6.58	-0.62	0.08	0.85	-5.88
		-5.88	0.0	7.01e-05	0.0	138.0	-11.19	1.94	-0.62	0.08	0.0	0.0
6	82	0.0	1.34	-2.99e-04	-4.64	0.0	-14.92	5.62	-0.97	-0.01	1.34	-4.55
		-4.55	0.0	2.89e-05	0.0	138.0	-14.53	0.97	-0.97	-0.01	0.0	0.0
6	83	0.0	0.0	-1.88e-05	-4.64	0.0	-10.91	6.57	0.97	0.02	-1.34	-5.86
		-5.86	-1.34	-3.51e-04	0.0	138.0	-10.53	1.93	0.97	0.02	0.0	0.0
6	105	0.0	0.0	-2.97e-04	-4.64	0.0	-14.79	5.44	0.79	-0.09	-1.09	-4.30
		-4.30	-1.09	-4.58e-04	0.0	138.0	-14.40	0.80	0.79	-0.09	0.0	0.0
6	108	0.0	1.09	-2.05e-05	-4.64	0.0	-11.04	6.75	-0.79	0.10	1.09	-6.11
		-6.11	0.0	1.35e-04	0.0	138.0	-10.66	2.11	-0.79	0.10	0.0	0.0
6	114	0.0	1.72	-3.38e-04	-4.64	0.0	-15.56	5.45	-1.24	-0.02	1.72	-4.32
		-4.32	0.0	8.26e-05	0.0	138.0	-15.17	0.81	-1.24	-0.02	0.0	0.0
6	115	0.0	0.0	2.10e-05	-4.64	0.0	-10.27	6.73	1.24	0.02	-1.72	-6.09
		-6.09	-1.72	-4.05e-04	0.0	138.0	-9.89	2.09	1.24	0.02	0.0	0.0
6	121	0.0	0.0	-1.59e-04	-4.64	0.0	-12.91	6.09	5.38e-05	1.33e-03	-7.42e-05	-5.21
		-5.21	-7.42e-05	-1.75e-04	0.0	138.0	-12.53	1.45	5.38e-05	1.33e-03	0.0	0.0
6	123	0.0	0.0	-1.59e-04	-4.64	0.0	-12.92	6.09	5.37e-05	1.33e-03	-7.41e-05	-5.21
		-5.21	-7.41e-05	-1.52e-04	0.0	138.0	-12.53	1.45	5.37e-05	1.33e-03	0.0	0.0
6	124	0.0	0.0	-1.60e-04	-4.64	0.0	-12.85	6.10	5.60e-05	1.39e-03	-7.72e-05	-5.22
		-5.22	-7.72e-05	-1.52e-04	0.0	138.0	-12.46	1.46	5.60e-05	1.39e-03	0.0	0.0
6	126	0.0	0.0	-1.63e-04	-4.64	0.0	-12.72	6.11	6.00e-05	1.49e-03	-8.28e-05	-5.24
		-5.24	-8.28e-05	-1.75e-04	0.0	138.0	-12.34	1.47	6.00e-05	1.49e-03	0.0	0.0
6	133	0.0	0.0	-1.59e-04	-4.64	0.0	-12.91	6.09	5.38e-05	1.33e-03	-7.42e-05	-5.21
		-5.21	-7.42e-05	-1.75e-04	0.0	138.0	-12.53	1.45	5.38e-05	1.33e-03	0.0	0.0

6	134	0.0	0.0	-1.59e-04	-4.64	0.0	-12.92	6.09	5.37e-05	1.33e-03	-7.41e-05	-5.21
		-5.21	-7.41e-05	-1.59e-04	0.0	138.0	-12.53	1.45	5.37e-05	1.33e-03	0.0	0.0
6	136	0.0	0.0	-1.59e-04	-4.64	0.0	-12.89	6.10	5.47e-05	1.36e-03	-7.54e-05	-5.21
		-5.21	-7.54e-05	-1.75e-04	0.0	138.0	-12.50	1.46	5.47e-05	1.36e-03	0.0	0.0
6	138	0.0	0.0	-1.59e-04	-4.64	0.0	-12.91	6.09	5.38e-05	1.33e-03	-7.42e-05	-5.21
		-5.21	-7.42e-05	-1.75e-04	0.0	138.0	-12.53	1.45	5.38e-05	1.33e-03	0.0	0.0
6	139	0.0	0.0	-1.59e-04	-4.64	0.0	-12.92	6.09	5.37e-05	1.33e-03	-7.42e-05	-5.21
		-5.21	-7.42e-05	-1.61e-04	0.0	138.0	-12.53	1.45	5.37e-05	1.33e-03	0.0	0.0
7	3	3.39	0.0	3.34e-04	-6.03	0.0	-16.09	0.59	6.98e-05	1.73e-03	-9.64e-05	3.35
		0.0	-9.64e-05	1.92e-04	0.0	138.0	-16.59	-5.45	6.98e-05	1.73e-03	0.0	0.0
7	7	2.61	0.0	2.57e-04	-4.64	0.0	-12.38	0.45	5.37e-05	1.33e-03	-7.41e-05	2.58
		0.0	-7.41e-05	1.39e-04	0.0	138.0	-12.76	-4.19	5.37e-05	1.33e-03	0.0	0.0
7	10	3.41	0.0	3.39e-04	-6.03	0.0	-15.80	0.57	7.93e-05	1.96e-03	-1.09e-04	3.37
		0.0	-1.09e-04	2.27e-04	0.0	138.0	-16.29	-5.46	7.93e-05	1.96e-03	0.0	0.0
7	16	2.63	0.0	2.62e-04	-4.64	0.0	-12.08	0.44	6.32e-05	1.56e-03	-8.72e-05	2.60
		0.0	-8.72e-05	1.74e-04	0.0	138.0	-12.47	-4.21	6.32e-05	1.56e-03	0.0	0.0
7	30	2.44	0.0	2.98e-04	-4.64	0.0	-14.61	0.59	0.05	-0.10	-0.07	2.38
		0.0	-0.07	-6.06e-05	0.0	138.0	-14.99	-4.05	0.05	-0.10	0.0	0.0
7	31	2.79	0.07	2.16e-04	-4.64	0.0	-10.14	0.31	-0.05	0.10	0.07	2.77
		0.0	0.0	3.81e-04	0.0	138.0	-10.52	-4.33	-0.05	0.10	0.0	0.0
7	41	2.34	0.48	2.69e-04	-4.64	0.0	-13.69	0.67	-0.35	-3.80e-03	0.48	2.28
		0.0	0.0	3.95e-04	0.0	138.0	-14.07	-3.97	-0.35	-3.80e-03	0.0	0.0
7	44	2.89	0.0	2.45e-04	-4.64	0.0	-11.06	0.23	0.35	6.45e-03	-0.48	2.88
		0.0	-0.48	-7.44e-05	0.0	138.0	-11.44	-4.41	0.35	6.45e-03	0.0	0.0
7	53	2.80	0.54	2.18e-04	-4.64	0.0	-11.53	0.30	-0.39	0.04	0.54	2.79
		0.0	0.0	4.91e-04	0.0	138.0	-11.91	-4.34	-0.39	0.04	0.0	0.0
7	56	2.43	0.0	2.96e-04	-4.64	0.0	-13.22	0.60	0.39	-0.04	-0.54	2.37
		0.0	-0.54	-1.71e-04	0.0	138.0	-13.60	-4.04	0.39	-0.04	0.0	0.0
7	62	2.41	0.0	3.05e-04	-4.64	0.0	-14.97	0.61	0.06	-0.11	-0.08	2.35
		0.0	-0.08	-9.64e-05	0.0	138.0	-15.35	-4.03	0.06	-0.11	0.0	0.0
7	63	2.82	0.08	2.09e-04	-4.64	0.0	-9.78	0.29	-0.06	0.12	0.08	2.80
		0.0	0.0	4.17e-04	0.0	138.0	-10.16	-4.35	-0.06	0.12	0.0	0.0
7	73	2.30	0.55	2.71e-04	-4.64	0.0	-13.89	0.71	-0.40	-4.92e-03	0.55	2.23
		0.0	0.0	4.33e-04	0.0	138.0	-14.27	-3.94	-0.40	-4.92e-03	0.0	0.0
7	76	2.93	0.0	2.43e-04	-4.64	0.0	-10.86	0.20	0.40	7.57e-03	-0.55	2.93
		0.0	-0.55	-1.13e-04	0.0	138.0	-11.25	-4.44	0.40	7.57e-03	0.0	0.0
7	85	2.83	0.63	2.11e-04	-4.64	0.0	-11.41	0.28	-0.46	0.05	0.63	2.82
		0.0	0.0	5.45e-04	0.0	138.0	-11.79	-4.36	-0.46	0.05	0.0	0.0
7	88	2.40	0.0	3.03e-04	-4.64	0.0	-13.34	0.62	0.46	-0.05	-0.63	2.34
		0.0	-0.63	-2.25e-04	0.0	138.0	-13.72	-4.02	0.46	-0.05	0.0	0.0
7	94	2.35	0.0	3.19e-04	-4.64	0.0	-15.73	0.67	0.08	-0.15	-0.11	2.28
		0.0	-0.11	-1.69e-04	0.0	138.0	-16.11	-3.97	0.08	-0.15	0.0	0.0
7	95	2.88	0.11	1.95e-04	-4.64	0.0	-9.02	0.24	-0.08	0.15	0.11	2.88
		0.0	0.0	4.90e-04	0.0	138.0	-9.40	-4.40	-0.08	0.15	0.0	0.0
7	105	2.20	0.71	2.75e-04	-4.64	0.0	-14.46	0.79	-0.51	-7.07e-03	0.71	2.11
		0.0	0.0	5.10e-04	0.0	138.0	-14.84	-3.85	-0.51	-7.07e-03	0.0	0.0
7	108	3.05	0.0	2.39e-04	-4.64	0.0	-10.29	0.11	0.51	9.72e-03	-0.71	3.05
		0.0	-0.71	-1.89e-04	0.0	138.0	-10.67	-4.53	0.51	9.72e-03	0.0	0.0
7	117	2.90	0.80	1.99e-04	-4.64	0.0	-11.07	0.22	-0.58	0.06	0.80	2.90
		0.0	0.0	6.54e-04	0.0	138.0	-11.45	-4.42	-0.58	0.06	0.0	0.0
7	120	2.33	0.0	3.15e-04	-4.64	0.0	-13.68	0.68	0.58	-0.06	-0.80	2.26
		0.0	-0.80	-3.33e-04	0.0	138.0	-14.07	-3.96	0.58	-0.06	0.0	0.0
7	123	2.61	0.0	2.57e-04	-4.64	0.0	-12.38	0.45	5.37e-05	1.33e-03	-7.41e-05	2.58
		0.0	-7.41e-05	1.51e-04	0.0	138.0	-12.76	-4.19	5.37e-05	1.33e-03	0.0	0.0
7	126	2.62	0.0	2.60e-04	-4.64	0.0	-12.18	0.44	6.00e-05	1.48e-03	-8.28e-05	2.59
		0.0	-8.28e-05	1.74e-04	0.0	138.0	-12.56	-4.20	6.00e-05	1.48e-03	0.0	0.0
7	134	2.61	0.0	2.57e-04	-4.64	0.0	-12.38	0.45	5.37e-05	1.33e-03	-7.41e-05	2.58
		0.0	-7.41e-05	1.58e-04	0.0	138.0	-12.76	-4.19	5.37e-05	1.33e-03	0.0	0.0
7	136	2.61	0.0	2.58e-04	-4.64	0.0	-12.35	0.45	5.47e-05	1.35e-03	-7.54e-05	2.58
		0.0	-7.54e-05	1.74e-04	0.0	138.0	-12.73	-4.19	5.47e-05	1.35e-03	0.0	0.0
7	138	2.61	0.0	2.57e-04	-4.64	0.0	-12.37	0.45	5.38e-05	1.33e-03	-7.42e-05	2.58
		0.0	-7.42e-05	1.74e-04	0.0	138.0	-12.76	-4.19	5.38e-05	1.33e-03	0.0	0.0
7	139	2.61	0.0	2.57e-04	-4.64	0.0	-12.38	0.45	5.37e-05	1.33e-03	-7.42e-05	2.58
		0.0	-7.42e-05	1.60e-04	0.0	138.0	-12.76	-4.19	5.37e-05	1.33e-03	0.0	0.0
8	3	4.05	0.0	-6.32e-04	-6.03	0.0	-25.55	5.95	-1.59e-04	-5.26e-03	0.0	0.0
		0.0	-2.19e-04	-1.91e-04	0.0	138.0	-25.05	-0.08	-1.59e-04	-5.26e-03	-2.19e-04	4.05
8	4	4.06	0.0	-6.35e-04	-6.03	0.0	-25.46	5.96	-1.62e-04	-5.36e-03	0.0	0.0
		0.0	-2.23e-04	-1.91e-04	0.0	138.0	-24.97	-0.07	-1.62e-04	-5.36e-03	-2.23e-04	4.06
8	7	3.12	0.0	-4.86e-04	-4.64	0.0	-19.65	4.58	-1.22e-04	-4.05e-03	0.0	0.0
		0.0	-1.69e-04	-1.39e-04	0.0	138.0	-19.27	-0.06	-1.22e-04	-4.05e-03	-1.69e-04	3.12
8	10	4.08	0.0	-6.39e-04	-6.03	0.0	-25.31	5.97	-1.67e-04	-5.53e-03	0.0	0.0
		0.0	-2.30e-04	-2.26e-04	0.0	138.0	-24.81	-0.06	-1.67e-04	-5.53e-03	-2.30e-04	4.08
8	16	3.14	0.0	-4.93e-04	-4.64	0.0	-19.41	4.60	-1.30e-04	-4.32e-03	0.0	0.0
		0.0	-1.80e-04	-1.74e-04	0.0	138.0	-19.03	-0.04	-1.30e-04	-4.32e-03	-1.80e-04	3.14
8	44	3.46	0.0	-5.48e-04	-4.64	0.0	-18.00	4.83	-0.72	0.16	0.0	0.0
		0.0	-0.99	9.29e-04	0.0	138.0	-17.61	0.18	-0.72	0.16	-0.99	3.46
8	46	3.42	0.0	-5.42e-04	-4.64	0.0	-18.31	4.80	-0.86	0.10	0.0	0.0
		0.0	-1.19	7.19e-04	0.0	138.0	-17.93	0.15	-0.86	0.10	-1.19	3.42

8	47	2.83	1.19	-4.31e-04	-4.64	0.0	-20.99	4.36	0.86	-0.11	0.0	0.0
		0.0	0.0	-1.04e-03	0.0	138.0	-20.61	-0.28	0.86	-0.11	1.19	2.82
8	49	2.82	0.85	-4.62e-04	-4.64	0.0	-21.62	4.36	0.62	-0.11	0.0	0.0
		0.0	0.0	-9.90e-04	0.0	138.0	-21.23	-0.28	0.62	-0.11	0.85	2.81
8	52	3.42	0.0	-5.11e-04	-4.64	0.0	-17.69	4.80	-0.62	0.10	0.0	0.0
		0.0	-0.85	6.70e-04	0.0	138.0	-17.30	0.16	-0.62	0.10	-0.85	3.42
8	76	3.51	0.0	-5.58e-04	-4.64	0.0	-17.75	4.86	-0.83	0.18	0.0	0.0
		0.0	-1.14	1.11e-03	0.0	138.0	-17.37	0.22	-0.83	0.18	-1.14	3.51
8	78	3.46	0.0	-5.50e-04	-4.64	0.0	-18.11	4.83	-0.99	0.11	0.0	0.0
		0.0	-1.37	8.62e-04	0.0	138.0	-17.73	0.19	-0.99	0.11	-1.37	3.46
8	79	2.79	1.37	-4.22e-04	-4.64	0.0	-21.19	4.33	0.99	-0.12	0.0	0.0
		0.0	0.0	-1.18e-03	0.0	138.0	-20.81	-0.31	0.99	-0.12	1.37	2.77
8	81	2.78	0.97	-4.58e-04	-4.64	0.0	-21.91	4.33	0.71	-0.13	0.0	0.0
		0.0	0.0	-1.12e-03	0.0	138.0	-21.53	-0.32	0.71	-0.13	0.97	2.77
8	84	3.47	0.0	-5.15e-04	-4.64	0.0	-17.39	4.83	-0.71	0.12	0.0	0.0
		0.0	-0.97	8.01e-04	0.0	138.0	-17.01	0.19	-0.71	0.12	-0.97	3.47
8	108	3.63	0.0	-5.78e-04	-4.64	0.0	-17.06	4.95	-1.06	0.23	0.0	0.0
		0.0	-1.46	1.46e-03	0.0	138.0	-16.68	0.31	-1.06	0.23	-1.46	3.63
8	110	3.57	0.0	-5.68e-04	-4.64	0.0	-17.54	4.91	-1.26	0.15	0.0	0.0
		0.0	-1.74	1.15e-03	0.0	138.0	-17.15	0.27	-1.26	0.15	-1.74	3.57
8	111	2.68	1.74	-4.04e-04	-4.64	0.0	-21.77	4.25	1.26	-0.15	0.0	0.0
		0.0	0.0	-1.47e-03	0.0	138.0	-21.38	-0.39	1.26	-0.15	1.74	2.66
8	113	2.68	1.23	-4.50e-04	-4.64	0.0	-22.65	4.25	0.89	-0.16	0.0	0.0
		0.0	0.0	-1.38e-03	0.0	138.0	-22.27	-0.40	0.89	-0.16	1.23	2.66
8	116	3.58	0.0	-5.23e-04	-4.64	0.0	-16.65	4.91	-0.89	0.15	0.0	0.0
		0.0	-1.23	1.06e-03	0.0	138.0	-16.27	0.27	-0.89	0.15	-1.23	3.58
8	123	3.12	0.0	-4.86e-04	-4.64	0.0	-19.65	4.58	-1.22e-04	-4.05e-03	0.0	0.0
		0.0	-1.69e-04	-1.51e-04	0.0	138.0	-19.27	-0.06	-1.22e-04	-4.05e-03	-1.69e-04	3.12
8	124	3.12	0.0	-4.88e-04	-4.64	0.0	-19.60	4.58	-1.24e-04	-4.11e-03	0.0	0.0
		0.0	-1.71e-04	-1.51e-04	0.0	138.0	-19.21	-0.06	-1.24e-04	-4.11e-03	-1.71e-04	3.12
8	126	3.13	0.0	-4.91e-04	-4.64	0.0	-19.49	4.59	-1.28e-04	-4.23e-03	0.0	0.0
		0.0	-1.76e-04	-1.74e-04	0.0	138.0	-19.11	-0.05	-1.28e-04	-4.23e-03	-1.76e-04	3.13
8	134	3.12	0.0	-4.86e-04	-4.64	0.0	-19.65	4.58	-1.22e-04	-4.05e-03	0.0	0.0
		0.0	-1.69e-04	-1.58e-04	0.0	138.0	-19.27	-0.06	-1.22e-04	-4.05e-03	-1.69e-04	3.12
8	136	3.12	0.0	-4.87e-04	-4.64	0.0	-19.63	4.58	-1.23e-04	-4.07e-03	0.0	0.0
		0.0	-1.70e-04	-1.74e-04	0.0	138.0	-19.24	-0.06	-1.23e-04	-4.07e-03	-1.70e-04	3.12
8	138	3.12	0.0	-4.86e-04	-4.64	0.0	-19.65	4.58	-1.22e-04	-4.05e-03	0.0	0.0
		0.0	-1.69e-04	-1.74e-04	0.0	138.0	-19.27	-0.06	-1.22e-04	-4.05e-03	-1.69e-04	3.12
8	139	3.12	0.0	-4.86e-04	-4.64	0.0	-19.65	4.58	-1.22e-04	-4.05e-03	0.0	0.0
		0.0	-1.69e-04	-1.60e-04	0.0	138.0	-19.27	-0.06	-1.22e-04	-4.05e-03	-1.69e-04	3.12
9	3	4.05	2.19e-04	6.46e-04	-6.03	0.0	-25.05	0.08	-1.59e-04	-5.26e-03	2.19e-04	4.05
		0.0	0.0	1.83e-04	0.0	138.0	-25.55	-5.95	-1.59e-04	-5.26e-03	0.0	0.0
9	9	4.07	2.26e-04	6.51e-04	-6.03	0.0	-24.89	0.07	-1.64e-04	-5.44e-03	2.26e-04	4.07
		0.0	0.0	2.18e-04	0.0	138.0	-25.39	-5.97	-1.64e-04	-5.44e-03	0.0	0.0
9	10	4.08	2.30e-04	6.54e-04	-6.03	0.0	-24.81	0.06	-1.67e-04	-5.53e-03	2.30e-04	4.08
		0.0	0.0	2.18e-04	0.0	138.0	-25.31	-5.97	-1.67e-04	-5.53e-03	0.0	0.0
9	16	3.14	1.80e-04	5.05e-04	-4.64	0.0	-19.03	0.04	-1.30e-04	-4.32e-03	1.80e-04	3.14
		0.0	0.0	1.68e-04	0.0	138.0	-19.41	-4.60	-1.30e-04	-4.32e-03	0.0	0.0
9	21	4.07	2.27e-04	6.52e-04	-6.03	0.0	-24.88	0.07	-1.65e-04	-5.45e-03	2.27e-04	4.07
		0.0	0.0	2.18e-04	0.0	138.0	-25.38	-5.97	-1.65e-04	-5.45e-03	0.0	0.0
9	44	3.47	0.0	5.42e-04	-4.64	0.0	-17.50	-0.19	0.90	-0.08	-1.25	3.47
		0.0	-1.25	-8.48e-04	0.0	138.0	-17.88	-4.83	0.90	-0.08	0.0	0.0
9	45	2.78	1.25	4.52e-04	-4.64	0.0	-21.03	0.31	-0.90	0.07	1.25	2.77
		0.0	0.0	1.16e-03	0.0	138.0	-21.42	-4.33	-0.90	0.07	0.0	0.0
9	47	2.83	1.03	4.74e-04	-4.64	0.0	-20.43	0.28	-0.75	0.11	1.03	2.82
		0.0	0.0	1.04e-03	0.0	138.0	-20.81	-4.36	-0.75	0.11	0.0	0.0
9	48	3.46	0.0	5.43e-04	-4.64	0.0	-17.50	-0.19	0.90	-0.08	-1.25	3.46
		0.0	-1.25	-8.49e-04	0.0	138.0	-17.88	-4.83	0.90	-0.08	0.0	0.0
9	49	2.82	1.00	4.44e-04	-4.64	0.0	-21.41	0.28	-0.73	0.09	1.00	2.81
		0.0	0.0	9.74e-04	0.0	138.0	-21.79	-4.36	-0.73	0.09	0.0	0.0
9	52	3.42	0.0	5.51e-04	-4.64	0.0	-17.13	-0.16	0.72	-0.10	-1.00	3.42
		0.0	-1.00	-6.66e-04	0.0	138.0	-17.51	-4.80	0.72	-0.10	0.0	0.0
9	76	3.52	0.0	5.50e-04	-4.64	0.0	-17.23	-0.23	1.05	-0.09	-1.44	3.52
		0.0	-1.44	-1.01e-03	0.0	138.0	-17.61	-4.87	1.05	-0.09	0.0	0.0
9	77	2.73	1.44	4.44e-04	-4.64	0.0	-21.30	0.35	-1.05	0.08	1.44	2.72
		0.0	0.0	1.32e-03	0.0	138.0	-21.68	-4.29	-1.05	0.08	0.0	0.0
9	79	2.79	1.20	4.70e-04	-4.64	0.0	-20.59	0.31	-0.87	0.13	1.20	2.77
		0.0	0.0	1.19e-03	0.0	138.0	-20.98	-4.33	-0.87	0.13	0.0	0.0
9	80	3.52	0.0	5.50e-04	-4.64	0.0	-17.24	-0.23	1.05	-0.09	-1.44	3.52
		0.0	-1.44	-1.01e-03	0.0	138.0	-17.62	-4.87	1.05	-0.09	0.0	0.0
9	81	2.78	1.15	4.35e-04	-4.64	0.0	-21.73	0.32	-0.83	0.11	1.15	2.77
		0.0	0.0	1.10e-03	0.0	138.0	-22.12	-4.33	-0.83	0.11	0.0	0.0
9	84	3.47	0.0	5.59e-04	-4.64	0.0	-16.80	-0.19	0.83	-0.11	-1.15	3.47
		0.0	-1.15	-7.96e-04	0.0	138.0	-17.19	-4.83	0.83	-0.11	0.0	0.0
9	108	3.65	0.0	5.64e-04	-4.64	0.0	-16.51	-0.32	1.33	-0.12	-1.83	3.65
		0.0	-1.83	-1.34e-03	0.0	138.0	-16.89	-4.96	1.33	-0.12	0.0	0.0
9	109	2.62	1.83	4.29e-04	-4.64	0.0	-22.02	0.44	-1.33	0.11	1.83	2.59
		0.0	0.0	1.64e-03	0.0	138.0	-22.40	-4.20	-1.33	0.11	0.0	0.0

9	111	2.68	1.52	4.62e-04	-4.64	0.0	-21.11	0.39	-1.10	0.16	1.52	2.66
		0.0	0.0	1.48e-03	0.0	138.0	-21.49	-4.25	-1.10	0.16	0.0	0.0
9	112	3.64	0.0	5.65e-04	-4.64	0.0	-16.52	-0.32	1.33	-0.12	-1.83	3.64
		0.0	-1.83	-1.34e-03	0.0	138.0	-16.90	-4.96	1.33	-0.12	0.0	0.0
9	113	2.68	1.45	4.18e-04	-4.64	0.0	-22.53	0.40	-1.05	0.13	1.45	2.66
		0.0	0.0	1.36e-03	0.0	138.0	-22.91	-4.25	-1.05	0.13	0.0	0.0
9	116	3.58	0.0	5.76e-04	-4.64	0.0	-16.01	-0.27	1.05	-0.14	-1.45	3.58
		0.0	-1.45	-1.06e-03	0.0	138.0	-16.39	-4.91	1.05	-0.14	0.0	0.0
9	123	3.12	1.69e-04	4.97e-04	-4.64	0.0	-19.27	0.06	-1.22e-04	-4.05e-03	1.69e-04	3.12
		0.0	0.0	1.45e-04	0.0	138.0	-19.65	-4.58	-1.22e-04	-4.05e-03	0.0	0.0
9	125	3.13	1.73e-04	5.00e-04	-4.64	0.0	-19.16	0.05	-1.26e-04	-4.16e-03	1.73e-04	3.13
		0.0	0.0	1.68e-04	0.0	138.0	-19.55	-4.59	-1.26e-04	-4.16e-03	0.0	0.0
9	126	3.13	1.76e-04	5.02e-04	-4.64	0.0	-19.11	0.05	-1.28e-04	-4.23e-03	1.76e-04	3.13
		0.0	0.0	1.68e-04	0.0	138.0	-19.49	-4.59	-1.28e-04	-4.23e-03	0.0	0.0
9	131	3.13	1.74e-04	5.01e-04	-4.64	0.0	-19.15	0.05	-1.26e-04	-4.17e-03	1.74e-04	3.13
		0.0	0.0	1.68e-04	0.0	138.0	-19.54	-4.59	-1.26e-04	-4.17e-03	0.0	0.0
9	133	3.12	1.69e-04	4.97e-04	-4.64	0.0	-19.27	0.06	-1.22e-04	-4.05e-03	1.69e-04	3.12
		0.0	0.0	1.68e-04	0.0	138.0	-19.65	-4.58	-1.22e-04	-4.05e-03	0.0	0.0
9	134	3.12	1.69e-04	4.97e-04	-4.64	0.0	-19.27	0.06	-1.22e-04	-4.05e-03	1.69e-04	3.12
		0.0	0.0	1.52e-04	0.0	138.0	-19.65	-4.58	-1.22e-04	-4.05e-03	0.0	0.0
9	136	3.12	1.70e-04	4.98e-04	-4.64	0.0	-19.24	0.06	-1.23e-04	-4.07e-03	1.70e-04	3.12
		0.0	0.0	1.68e-04	0.0	138.0	-19.63	-4.58	-1.23e-04	-4.07e-03	0.0	0.0
9	138	3.12	1.69e-04	4.97e-04	-4.64	0.0	-19.27	0.06	-1.22e-04	-4.05e-03	1.69e-04	3.12
		0.0	0.0	1.68e-04	0.0	138.0	-19.65	-4.58	-1.22e-04	-4.05e-03	0.0	0.0
9	139	3.12	1.69e-04	4.97e-04	-4.64	0.0	-19.27	0.06	-1.22e-04	-4.05e-03	1.69e-04	3.12
		0.0	0.0	1.54e-04	0.0	138.0	-19.65	-4.58	-1.22e-04	-4.05e-03	0.0	0.0
10	3	3.89	0.0	-4.58e-04	-6.03	0.0	-16.10	5.83	-2.37e-04	-5.48e-03	0.0	0.0
		0.0	-3.28e-04	-2.16e-04	0.0	138.2	-15.50	-0.20	-2.37e-04	-5.48e-03	-3.28e-04	3.89
10	7	2.99	0.0	-3.53e-04	-4.64	0.0	-12.38	4.48	-1.82e-04	-4.21e-03	0.0	0.0
		0.0	-2.52e-04	-1.57e-04	0.0	138.2	-11.92	-0.16	-1.82e-04	-4.21e-03	-2.52e-04	2.99
10	10	3.97	0.0	-4.73e-04	-6.03	0.0	-15.51	5.89	-3.03e-04	-7.01e-03	0.0	0.0
		0.0	-4.19e-04	-2.58e-04	0.0	138.2	-14.91	-0.15	-3.03e-04	-7.01e-03	-4.19e-04	3.97
10	16	3.07	0.0	-3.67e-04	-4.64	0.0	-11.79	4.54	-2.48e-04	-5.74e-03	0.0	0.0
		0.0	-3.43e-04	-1.98e-04	0.0	138.2	-11.34	-0.10	-2.48e-04	-5.74e-03	-3.43e-04	3.07
10	24	3.05	0.0	-3.63e-04	-4.64	0.0	-11.97	4.52	-2.29e-04	-5.28e-03	0.0	0.0
		0.0	-3.16e-04	-1.69e-04	0.0	138.2	-11.51	-0.12	-2.29e-04	-5.28e-03	-3.16e-04	3.05
10	26	3.16	0.0	-4.07e-04	-4.64	0.0	-11.26	4.61	-0.54	-0.05	0.0	0.0
		0.0	-0.74	1.41e-04	0.0	138.2	-10.80	-0.03	-0.54	-0.05	-0.74	3.16
10	27	2.83	0.74	-2.99e-04	-4.64	0.0	-13.50	4.36	0.54	0.04	0.0	0.0
		0.0	0.0	-5.04e-04	0.0	138.2	-13.04	-0.28	0.54	0.04	0.74	2.82
10	45	2.73	0.38	-3.35e-04	-4.64	0.0	-12.96	4.28	0.28	-0.09	0.0	0.0
		0.0	0.0	-5.39e-04	0.0	138.2	-12.50	-0.36	0.28	-0.09	0.38	2.71
10	50	3.41	0.0	-4.00e-04	-4.64	0.0	-11.30	4.79	-0.74	0.04	0.0	0.0
		0.0	-1.02	4.22e-04	0.0	138.2	-10.84	0.15	-0.74	0.04	-1.02	3.41
10	51	2.60	1.02	-3.05e-04	-4.64	0.0	-13.46	4.18	0.74	-0.04	0.0	0.0
		0.0	0.0	-7.86e-04	0.0	138.2	-13.00	-0.46	0.74	-0.04	1.02	2.57
10	58	3.19	0.0	-4.15e-04	-4.64	0.0	-11.08	4.63	-0.62	-0.05	0.0	0.0
		0.0	-0.85	1.90e-04	0.0	138.2	-10.62	-0.01	-0.62	-0.05	-0.85	3.19
10	59	2.80	0.85	-2.90e-04	-4.64	0.0	-13.68	4.34	0.62	0.05	0.0	0.0
		0.0	0.0	-5.54e-04	0.0	138.2	-13.22	-0.30	0.62	0.05	0.85	2.79
10	77	2.69	0.44	-3.32e-04	-4.64	0.0	-13.04	4.25	0.32	-0.11	0.0	0.0
		0.0	0.0	-5.98e-04	0.0	138.2	-12.58	-0.39	0.32	-0.11	0.44	2.67
10	82	3.48	0.0	-4.08e-04	-4.64	0.0	-11.15	4.84	-0.86	0.04	0.0	0.0
		0.0	-1.18	5.19e-04	0.0	138.2	-10.69	0.20	-0.86	0.04	-1.18	3.48
10	83	2.54	1.18	-2.97e-04	-4.64	0.0	-13.61	4.13	0.86	-0.05	0.0	0.0
		0.0	0.0	-8.83e-04	0.0	138.2	-13.15	-0.51	0.86	-0.05	1.18	2.50
10	106	3.48	0.0	-4.19e-04	-4.64	0.0	-10.65	4.84	-0.77	0.07	0.0	0.0
		0.0	-1.07	5.26e-04	0.0	138.2	-10.19	0.20	-0.77	0.07	-1.07	3.48
10	107	2.54	1.07	-2.86e-04	-4.64	0.0	-14.11	4.13	0.77	-0.08	0.0	0.0
		0.0	0.0	-8.90e-04	0.0	138.2	-13.65	-0.51	0.77	-0.08	1.07	2.50
10	109	2.60	0.57	-3.26e-04	-4.64	0.0	-13.33	4.18	0.41	-0.14	0.0	0.0
		0.0	0.0	-7.15e-04	0.0	138.2	-12.87	-0.46	0.41	-0.14	0.57	2.57
10	114	3.62	0.0	-4.23e-04	-4.64	0.0	-10.69	4.94	-1.09	0.05	0.0	0.0
		0.0	-1.51	7.16e-04	0.0	138.2	-10.23	0.30	-1.09	0.05	-1.51	3.62
10	115	2.41	1.51	-2.82e-04	-4.64	0.0	-14.07	4.03	1.09	-0.06	0.0	0.0
		0.0	0.0	-1.08e-03	0.0	138.2	-13.61	-0.61	1.09	-0.06	1.51	2.36
10	123	2.99	0.0	-3.53e-04	-4.64	0.0	-12.38	4.48	-1.83e-04	-4.22e-03	0.0	0.0
		0.0	-2.52e-04	-1.71e-04	0.0	138.2	-11.92	-0.16	-1.83e-04	-4.22e-03	-2.52e-04	2.99
10	126	3.04	0.0	-3.62e-04	-4.64	0.0	-11.99	4.52	-2.27e-04	-5.24e-03	0.0	0.0
		0.0	-3.13e-04	-1.99e-04	0.0	138.2	-11.53	-0.12	-2.27e-04	-5.24e-03	-3.13e-04	3.04
10	132	3.03	0.0	-3.59e-04	-4.64	0.0	-12.10	4.51	-2.13e-04	-4.93e-03	0.0	0.0
		0.0	-2.95e-04	-1.79e-04	0.0	138.2	-11.64	-0.13	-2.13e-04	-4.93e-03	-2.95e-04	3.03
10	134	2.99	0.0	-3.53e-04	-4.64	0.0	-12.38	4.48	-1.83e-04	-4.23e-03	0.0	0.0
		0.0	-2.53e-04	-1.79e-04	0.0	138.2	-11.92	-0.16	-1.83e-04	-4.23e-03	-2.53e-04	2.99
10	136	3.00	0.0	-3.54e-04	-4.64	0.0	-12.32	4.49	-1.89e-04	-4.38e-03	0.0	0.0
		0.0	-2.62e-04	-1.99e-04	0.0	138.2	-11.86	-0.15	-1.89e-04	-4.38e-03	-2.62e-04	3.00
10	137	3.00	0.0	-3.54e-04	-4.64	0.0	-12.32	4.49	-1.89e-04	-4.37e-03	0.0	0.0
		0.0	-2.61e-04	-1.82e-04	0.0	138.2	-11.87	-0.15	-1.89e-04	-4.37e-03	-2.61e-04	3.00

10	138	2.99	0.0	-3.53e-04	-4.64	0.0	-12.38	4.48	-1.83e-04	-4.24e-03	0.0	0.0
		0.0	-2.53e-04	-1.99e-04	0.0	138.2	-11.92	-0.16	-1.83e-04	-4.24e-03	-2.53e-04	2.99
10	139	2.99	0.0	-3.53e-04	-4.64	0.0	-12.38	4.48	-1.83e-04	-4.23e-03	0.0	0.0
		0.0	-2.53e-04	-1.82e-04	0.0	138.2	-11.92	-0.16	-1.83e-04	-4.23e-03	-2.53e-04	2.99
11	3	3.89	3.28e-04	4.16e-04	-6.03	0.0	-15.50	0.20	-2.37e-04	-5.48e-03	3.28e-04	3.89
		0.0	0.0	2.32e-04	0.0	138.2	-16.10	-5.83	-2.37e-04	-5.48e-03	0.0	0.0
11	8	3.02	2.84e-04	3.24e-04	-4.64	0.0	-11.72	0.14	-2.05e-04	-4.74e-03	2.84e-04	3.02
		0.0	0.0	1.69e-04	0.0	138.2	-12.17	-4.50	-2.05e-04	-4.74e-03	0.0	0.0
11	10	3.97	4.19e-04	4.27e-04	-6.03	0.0	-14.91	0.15	-3.03e-04	-7.01e-03	4.19e-04	3.97
		0.0	0.0	2.74e-04	0.0	138.2	-15.51	-5.89	-3.03e-04	-7.01e-03	0.0	0.0
11	16	3.07	3.43e-04	3.31e-04	-4.64	0.0	-11.34	0.10	-2.48e-04	-5.74e-03	3.43e-04	3.07
		0.0	0.0	2.11e-04	0.0	138.2	-11.79	-4.54	-2.48e-04	-5.74e-03	0.0	0.0
11	49	2.65	1.00	2.56e-04	-4.64	0.0	-12.64	0.42	-0.73	0.09	1.00	2.62
		0.0	0.0	6.73e-04	0.0	138.2	-13.10	-4.22	-0.73	0.09	0.0	0.0
11	50	3.41	0.0	3.57e-04	-4.64	0.0	-10.98	-0.15	0.48	-0.17	-0.67	3.41
		0.0	-0.67	-4.91e-04	0.0	138.2	-11.43	-4.79	0.48	-0.17	0.0	0.0
11	51	2.60	0.67	2.82e-04	-4.64	0.0	-12.87	0.46	-0.48	0.16	0.67	2.57
		0.0	0.0	8.79e-04	0.0	138.2	-13.33	-4.18	-0.48	0.16	0.0	0.0
11	52	3.36	0.0	3.83e-04	-4.64	0.0	-11.20	-0.11	0.73	-0.09	-1.00	3.36
		0.0	-1.00	-2.84e-04	0.0	138.2	-11.66	-4.75	0.73	-0.09	0.0	0.0
11	53	2.64	1.00	2.56e-04	-4.64	0.0	-12.65	0.43	-0.72	0.09	1.00	2.62
		0.0	0.0	6.74e-04	0.0	138.2	-13.11	-4.21	-0.72	0.09	0.0	0.0
11	81	2.60	1.16	2.46e-04	-4.64	0.0	-12.74	0.46	-0.84	0.10	1.16	2.57
		0.0	0.0	7.51e-04	0.0	138.2	-13.20	-4.18	-0.84	0.10	0.0	0.0
11	82	3.47	0.0	3.63e-04	-4.64	0.0	-10.85	-0.19	0.56	-0.20	-0.78	3.47
		0.0	-0.78	-6.01e-04	0.0	138.2	-11.30	-4.83	0.56	-0.20	0.0	0.0
11	83	2.54	0.78	2.76e-04	-4.64	0.0	-13.00	0.51	-0.56	0.19	0.78	2.51
		0.0	0.0	9.90e-04	0.0	138.2	-13.46	-4.14	-0.56	0.19	0.0	0.0
11	84	3.41	0.0	3.93e-04	-4.64	0.0	-11.11	-0.15	0.84	-0.11	-1.16	3.41
		0.0	-1.16	-3.63e-04	0.0	138.2	-11.56	-4.79	0.84	-0.11	0.0	0.0
11	85	2.59	1.16	2.46e-04	-4.64	0.0	-12.74	0.47	-0.84	0.10	1.16	2.56
		0.0	0.0	7.53e-04	0.0	138.2	-13.20	-4.17	-0.84	0.10	0.0	0.0
11	113	2.48	1.48	2.25e-04	-4.64	0.0	-13.07	0.56	-1.07	0.13	1.48	2.44
		0.0	0.0	9.08e-04	0.0	138.2	-13.53	-4.08	-1.07	0.13	0.0	0.0
11	114	3.62	0.0	3.75e-04	-4.64	0.0	-10.43	-0.30	0.72	-0.25	-0.99	3.62
		0.0	-0.99	-8.25e-04	0.0	138.2	-10.89	-4.94	0.72	-0.25	0.0	0.0
11	115	2.42	0.99	2.64e-04	-4.64	0.0	-13.41	0.61	-0.72	0.24	0.99	2.36
		0.0	0.0	1.21e-03	0.0	138.2	-13.87	-4.03	-0.72	0.24	0.0	0.0
11	116	3.54	0.0	4.14e-04	-4.64	0.0	-10.77	-0.24	1.07	-0.14	-1.48	3.54
		0.0	-1.48	-5.20e-04	0.0	138.2	-11.23	-4.88	1.07	-0.14	0.0	0.0
11	117	2.48	1.48	2.25e-04	-4.64	0.0	-13.09	0.56	-1.07	0.13	1.48	2.43
		0.0	0.0	9.10e-04	0.0	138.2	-13.54	-4.08	-1.07	0.13	0.0	0.0
11	123	2.99	2.52e-04	3.20e-04	-4.64	0.0	-11.92	0.16	-1.83e-04	-4.22e-03	2.52e-04	2.99
		0.0	0.0	1.83e-04	0.0	138.2	-12.38	-4.48	-1.83e-04	-4.22e-03	0.0	0.0
11	124	3.01	2.73e-04	3.22e-04	-4.64	0.0	-11.78	0.14	-1.98e-04	-4.57e-03	2.73e-04	3.01
		0.0	0.0	1.83e-04	0.0	138.2	-12.24	-4.50	-1.98e-04	-4.57e-03	0.0	0.0
11	126	3.04	3.13e-04	3.27e-04	-4.64	0.0	-11.53	0.12	-2.27e-04	-5.24e-03	3.13e-04	3.04
		0.0	0.0	2.11e-04	0.0	138.2	-11.99	-4.52	-2.27e-04	-5.24e-03	0.0	0.0
11	134	2.99	2.53e-04	3.20e-04	-4.64	0.0	-11.92	0.16	-1.83e-04	-4.23e-03	2.53e-04	2.99
		0.0	0.0	1.91e-04	0.0	138.2	-12.38	-4.48	-1.83e-04	-4.23e-03	0.0	0.0
11	136	3.00	2.62e-04	3.21e-04	-4.64	0.0	-11.86	0.15	-1.89e-04	-4.38e-03	2.62e-04	3.00
		0.0	0.0	2.11e-04	0.0	138.2	-12.32	-4.49	-1.89e-04	-4.38e-03	0.0	0.0
11	138	2.99	2.53e-04	3.20e-04	-4.64	0.0	-11.92	0.16	-1.83e-04	-4.24e-03	2.53e-04	2.99
		0.0	0.0	2.11e-04	0.0	138.2	-12.38	-4.48	-1.83e-04	-4.24e-03	0.0	0.0
11	139	2.99	2.53e-04	3.20e-04	-4.64	0.0	-11.92	0.16	-1.83e-04	-4.23e-03	2.53e-04	2.99
		0.0	0.0	1.94e-04	0.0	138.2	-12.38	-4.48	-1.83e-04	-4.23e-03	0.0	0.0
12	3	3.96	1.40e-04	-4.28e-04	-6.03	0.0	-15.54	5.88	1.01e-04	2.34e-03	0.0	0.0
		0.0	0.0	-2.35e-04	0.0	138.2	-14.94	-0.15	1.01e-04	2.34e-03	1.40e-04	3.96
12	7	3.05	1.07e-04	-3.29e-04	-4.64	0.0	-11.95	4.53	7.77e-05	1.80e-03	0.0	0.0
		0.0	0.0	-1.71e-04	0.0	138.2	-11.49	-0.11	7.77e-05	1.80e-03	1.07e-04	3.05
12	8	3.08	1.39e-04	-3.33e-04	-4.64	0.0	-11.74	4.55	1.00e-04	2.32e-03	0.0	0.0
		0.0	0.0	-1.71e-04	0.0	138.2	-11.28	-0.09	1.00e-04	2.32e-03	1.39e-04	3.08
12	10	4.04	2.30e-04	-4.39e-04	-6.03	0.0	-14.94	5.94	1.66e-04	3.85e-03	0.0	0.0
		0.0	0.0	-2.78e-04	0.0	138.2	-14.35	-0.09	1.66e-04	3.85e-03	2.30e-04	4.04
12	16	3.13	1.97e-04	-3.41e-04	-4.64	0.0	-11.36	4.58	1.43e-04	3.30e-03	0.0	0.0
		0.0	0.0	-2.13e-04	0.0	138.2	-10.90	-0.06	1.43e-04	3.30e-03	1.97e-04	3.13
12	42	3.41	0.0	-3.91e-04	-4.64	0.0	-11.51	4.79	-0.68	0.09	0.0	0.0
		0.0	-0.95	2.81e-04	0.0	138.2	-11.05	0.14	-0.68	0.09	-0.95	3.41
12	43	2.71	0.95	-2.68e-04	-4.64	0.0	-12.39	4.27	0.69	-0.09	0.0	0.0
		0.0	0.0	-6.74e-04	0.0	138.2	-11.94	-0.37	0.69	-0.09	0.95	2.69
12	44	3.46	0.0	-3.71e-04	-4.64	0.0	-11.04	4.82	-0.47	0.17	0.0	0.0
		0.0	-0.65	4.78e-04	0.0	138.2	-10.58	0.18	-0.47	0.17	-0.65	3.46
12	49	2.74	0.40	-3.13e-04	-4.64	0.0	-13.08	4.29	0.29	-0.08	0.0	0.0
		0.0	0.0	-6.59e-04	0.0	138.2	-12.62	-0.35	0.29	-0.08	0.40	2.73
12	52	3.37	0.0	-3.46e-04	-4.64	0.0	-10.82	4.76	-0.29	0.09	0.0	0.0
		0.0	-0.40	2.66e-04	0.0	138.2	-10.36	0.12	-0.29	0.09	-0.40	3.37
12	55	2.79	0.69	-2.93e-04	-4.64	0.0	-12.62	4.33	0.50	-0.01	0.0	0.0
		0.0	0.0	-4.63e-04	0.0	138.2	-12.16	-0.31	0.50	-0.01	0.69	2.78

12	74	3.46	0.0	-4.01e-04	-4.64	0.0	-11.45	4.83	-0.79	0.11	0.0	0.0
		0.0	-1.10	3.60e-04	0.0	138.2	-10.99	0.19	-0.79	0.11	-1.10	3.46
12	75	2.66	1.10	-2.58e-04	-4.64	0.0	-12.45	4.23	0.79	-0.10	0.0	0.0
		0.0	0.0	-7.53e-04	0.0	138.2	-11.99	-0.41	0.79	-0.10	1.10	2.63
12	76	3.52	0.0	-3.78e-04	-4.64	0.0	-10.91	4.87	-0.55	0.19	0.0	0.0
		0.0	-0.76	5.88e-04	0.0	138.2	-10.45	0.23	-0.55	0.19	-0.76	3.52
12	81	2.70	0.46	-3.10e-04	-4.64	0.0	-13.25	4.26	0.33	-0.10	0.0	0.0
		0.0	0.0	-7.34e-04	0.0	138.2	-12.79	-0.38	0.33	-0.10	0.46	2.68
12	84	3.42	0.0	-3.48e-04	-4.64	0.0	-10.65	4.79	-0.33	0.10	0.0	0.0
		0.0	-0.46	3.40e-04	0.0	138.2	-10.19	0.15	-0.33	0.10	-0.46	3.42
12	87	2.75	0.79	-2.87e-04	-4.64	0.0	-12.71	4.30	0.58	-0.01	0.0	0.0
		0.0	0.0	-5.08e-04	0.0	138.2	-12.25	-0.34	0.58	-0.01	0.79	2.73
12	106	3.59	0.0	-4.21e-04	-4.64	0.0	-11.18	4.92	-1.02	0.14	0.0	0.0
		0.0	-1.41	5.17e-04	0.0	138.2	-10.72	0.28	-1.02	0.14	-1.41	3.59
12	107	2.54	1.41	-2.37e-04	-4.64	0.0	-12.72	4.13	1.02	-0.13	0.0	0.0
		0.0	0.0	-9.10e-04	0.0	138.2	-12.26	-0.51	1.02	-0.13	1.41	2.50
12	108	3.67	0.0	-3.92e-04	-4.64	0.0	-10.48	4.98	-0.70	0.25	0.0	0.0
		0.0	-0.97	8.10e-04	0.0	138.2	-10.02	0.34	-0.70	0.25	-0.97	3.67
12	113	2.59	0.59	-3.05e-04	-4.64	0.0	-13.70	4.17	0.43	-0.13	0.0	0.0
		0.0	0.0	-8.85e-04	0.0	138.2	-13.24	-0.47	0.43	-0.13	0.59	2.56
12	116	3.54	0.0	-3.54e-04	-4.64	0.0	-10.20	4.88	-0.43	0.13	0.0	0.0
		0.0	-0.59	4.92e-04	0.0	138.2	-9.74	0.24	-0.43	0.13	-0.59	3.54
12	119	2.65	1.02	-2.75e-04	-4.64	0.0	-13.01	4.22	0.74	-0.02	0.0	0.0
		0.0	0.0	-5.95e-04	0.0	138.2	-12.55	-0.42	0.74	-0.02	1.02	2.63
12	123	3.05	1.08e-04	-3.29e-04	-4.64	0.0	-11.95	4.53	7.81e-05	1.80e-03	0.0	0.0
		0.0	0.0	-1.85e-04	0.0	138.2	-11.49	-0.11	7.81e-05	1.80e-03	1.08e-04	3.05
12	124	3.07	1.29e-04	-3.32e-04	-4.64	0.0	-11.81	4.54	9.32e-05	2.15e-03	0.0	0.0
		0.0	0.0	-1.85e-04	0.0	138.2	-11.35	-0.10	9.32e-05	2.15e-03	1.29e-04	3.07
12	126	3.10	1.68e-04	-3.37e-04	-4.64	0.0	-11.56	4.57	1.21e-04	2.81e-03	0.0	0.0
		0.0	0.0	-2.13e-04	0.0	138.2	-11.10	-0.08	1.21e-04	2.81e-03	1.68e-04	3.10
12	134	3.05	1.08e-04	-3.29e-04	-4.64	0.0	-11.95	4.53	7.83e-05	1.81e-03	0.0	0.0
		0.0	0.0	-1.94e-04	0.0	138.2	-11.49	-0.11	7.83e-05	1.81e-03	1.08e-04	3.05
12	136	3.06	1.17e-04	-3.30e-04	-4.64	0.0	-11.89	4.53	8.49e-05	1.96e-03	0.0	0.0
		0.0	0.0	-2.13e-04	0.0	138.2	-11.43	-0.11	8.49e-05	1.96e-03	1.17e-04	3.06
12	138	3.05	1.09e-04	-3.29e-04	-4.64	0.0	-11.95	4.53	7.88e-05	1.82e-03	0.0	0.0
		0.0	0.0	-2.13e-04	0.0	138.2	-11.49	-0.11	7.88e-05	1.82e-03	1.09e-04	3.05
12	139	3.05	1.08e-04	-3.29e-04	-4.64	0.0	-11.95	4.53	7.84e-05	1.81e-03	0.0	0.0
		0.0	0.0	-1.97e-04	0.0	138.2	-11.49	-0.11	7.84e-05	1.81e-03	1.08e-04	3.05
13	3	3.96	0.0	4.70e-04	-6.03	0.0	-14.94	0.15	1.01e-04	2.34e-03	-1.40e-04	3.96
		0.0	-1.40e-04	2.14e-04	0.0	138.2	-15.54	-5.88	1.01e-04	2.34e-03	0.0	0.0
13	8	3.08	0.0	3.67e-04	-4.64	0.0	-11.28	0.09	1.00e-04	2.32e-03	-1.39e-04	3.08
		0.0	-1.39e-04	1.55e-04	0.0	138.2	-11.74	-4.55	1.00e-04	2.32e-03	0.0	0.0
13	10	4.04	0.0	4.85e-04	-6.03	0.0	-14.35	0.09	1.66e-04	3.85e-03	-2.30e-04	4.04
		0.0	-2.30e-04	2.56e-04	0.0	138.2	-14.94	-5.94	1.66e-04	3.85e-03	0.0	0.0
13	16	3.13	0.0	3.76e-04	-4.64	0.0	-10.90	0.06	1.43e-04	3.30e-03	-1.97e-04	3.13
		0.0	-1.97e-04	1.97e-04	0.0	138.2	-11.36	-4.58	1.43e-04	3.30e-03	0.0	0.0
13	21	4.02	0.0	4.80e-04	-6.03	0.0	-14.52	0.11	1.48e-04	3.42e-03	-2.04e-04	4.02
		0.0	-2.04e-04	2.56e-04	0.0	138.2	-15.11	-5.93	1.48e-04	3.42e-03	0.0	0.0
13	29	2.87	0.67	2.99e-04	-4.64	0.0	-13.02	0.25	-0.49	-0.03	0.67	2.86
		0.0	0.0	4.89e-04	0.0	138.2	-13.48	-4.39	-0.49	-0.03	0.0	0.0
13	32	3.24	0.0	4.24e-04	-4.64	0.0	-9.96	-0.02	0.49	0.04	-0.67	3.24
		0.0	-0.67	-1.28e-04	0.0	138.2	-10.42	-4.66	0.49	0.04	0.0	0.0
13	41	2.66	0.97	3.09e-04	-4.64	0.0	-12.55	0.42	-0.70	0.04	0.97	2.63
		0.0	0.0	7.74e-04	0.0	138.2	-13.01	-4.23	-0.70	0.04	0.0	0.0
13	44	3.46	0.0	4.14e-04	-4.64	0.0	-10.43	-0.19	0.70	-0.03	-0.97	3.46
		0.0	-0.97	-4.14e-04	0.0	138.2	-10.89	-4.83	0.70	-0.03	0.0	0.0
13	46	3.41	0.0	3.81e-04	-4.64	0.0	-11.18	-0.15	0.48	-0.06	-0.66	3.41
		0.0	-0.66	-3.04e-04	0.0	138.2	-11.64	-4.79	0.48	-0.06	0.0	0.0
13	61	2.84	0.77	2.89e-04	-4.64	0.0	-13.26	0.27	-0.56	-0.04	0.77	2.83
		0.0	0.0	5.37e-04	0.0	138.2	-13.72	-4.37	-0.56	-0.04	0.0	0.0
13	64	3.26	0.0	4.35e-04	-4.64	0.0	-9.72	-0.04	0.56	0.04	-0.77	3.26
		0.0	-0.77	-1.77e-04	0.0	138.2	-10.18	-4.68	0.56	0.04	0.0	0.0
13	73	2.60	1.12	3.01e-04	-4.64	0.0	-12.70	0.46	-0.81	0.04	1.12	2.57
		0.0	0.0	8.71e-04	0.0	138.2	-13.16	-4.18	-0.81	0.04	0.0	0.0
13	76	3.53	0.0	4.22e-04	-4.64	0.0	-10.28	-0.23	0.81	-0.04	-1.12	3.53
		0.0	-1.12	-5.10e-04	0.0	138.2	-10.74	-4.87	0.81	-0.04	0.0	0.0
13	78	3.47	0.0	3.85e-04	-4.64	0.0	-11.15	-0.19	0.56	-0.08	-0.77	3.47
		0.0	-0.77	-3.83e-04	0.0	138.2	-11.61	-4.83	0.56	-0.08	0.0	0.0
13	93	2.78	0.99	2.68e-04	-4.64	0.0	-13.79	0.32	-0.72	-0.05	0.99	2.77
		0.0	0.0	6.38e-04	0.0	138.2	-14.25	-4.32	-0.72	-0.05	0.0	0.0
13	96	3.33	0.0	4.55e-04	-4.64	0.0	-9.19	-0.09	0.72	0.05	-0.99	3.33
		0.0	-0.99	-2.78e-04	0.0	138.2	-9.65	-4.73	0.72	0.05	0.0	0.0
13	105	2.46	1.44	2.84e-04	-4.64	0.0	-13.17	0.57	-1.04	0.05	1.44	2.41
		0.0	0.0	1.07e-03	0.0	138.2	-13.63	-4.07	-1.04	0.05	0.0	0.0
13	108	3.68	0.0	4.39e-04	-4.64	0.0	-9.81	-0.34	1.04	-0.05	-1.44	3.68
		0.0	-1.44	-7.05e-04	0.0	138.2	-10.27	-4.99	1.04	-0.05	0.0	0.0
13	110	3.60	0.0	3.91e-04	-4.64	0.0	-10.93	-0.29	0.72	-0.10	-0.99	3.60
		0.0	-0.99	-5.42e-04	0.0	138.2	-11.39	-4.93	0.72	-0.10	0.0	0.0

13	123	3.05	0.0	3.62e-04	-4.64	0.0	-11.49	0.11	7.81e-05	1.80e-03	-1.08e-04	3.05
		0.0	-1.08e-04	1.69e-04	0.0	138.2	-11.95	-4.53	7.81e-05	1.80e-03	0.0	0.0
13	124	3.07	0.0	3.65e-04	-4.64	0.0	-11.35	0.10	9.32e-05	2.15e-03	-1.29e-04	3.07
		0.0	-1.29e-04	1.69e-04	0.0	138.2	-11.81	-4.54	9.32e-05	2.15e-03	0.0	0.0
13	126	3.10	0.0	3.71e-04	-4.64	0.0	-11.10	0.08	1.21e-04	2.81e-03	-1.68e-04	3.10
		0.0	-1.68e-04	1.97e-04	0.0	138.2	-11.56	-4.57	1.21e-04	2.81e-03	0.0	0.0
13	131	3.09	0.0	3.68e-04	-4.64	0.0	-11.21	0.09	1.09e-04	2.52e-03	-1.51e-04	3.09
		0.0	-1.51e-04	1.97e-04	0.0	138.2	-11.67	-4.55	1.09e-04	2.52e-03	0.0	0.0
13	134	3.05	0.0	3.62e-04	-4.64	0.0	-11.49	0.11	7.83e-05	1.81e-03	-1.08e-04	3.05
		0.0	-1.08e-04	1.77e-04	0.0	138.2	-11.95	-4.53	7.83e-05	1.81e-03	0.0	0.0
13	136	3.06	0.0	3.63e-04	-4.64	0.0	-11.43	0.11	8.49e-05	1.96e-03	-1.17e-04	3.06
		0.0	-1.17e-04	1.97e-04	0.0	138.2	-11.89	-4.53	8.49e-05	1.96e-03	0.0	0.0
13	138	3.05	0.0	3.62e-04	-4.64	0.0	-11.49	0.11	7.88e-05	1.82e-03	-1.09e-04	3.05
		0.0	-1.09e-04	1.97e-04	0.0	138.2	-11.95	-4.53	7.88e-05	1.82e-03	0.0	0.0
13	139	3.05	0.0	3.62e-04	-4.64	0.0	-11.49	0.11	7.84e-05	1.81e-03	-1.08e-04	3.05
		0.0	-1.08e-04	1.80e-04	0.0	138.2	-11.95	-4.53	7.84e-05	1.81e-03	0.0	0.0
14	3	1.22	9.46e-05	-2.10e-04	-1.97	0.0	-16.29	1.89	6.98e-05	1.73e-03	0.0	0.0
		0.0	0.0	-1.79e-04	0.0	135.5	-16.13	-0.09	6.98e-05	1.73e-03	9.46e-05	1.22
14	5	0.94	7.28e-05	-1.61e-04	-1.52	0.0	-12.53	1.45	5.38e-05	1.33e-03	0.0	0.0
		0.0	0.0	-1.65e-04	0.0	135.5	-12.41	-0.07	5.38e-05	1.33e-03	7.28e-05	0.94
14	7	0.94	7.28e-05	-1.61e-04	-1.52	0.0	-12.53	1.45	5.37e-05	1.33e-03	0.0	0.0
		0.0	0.0	-1.30e-04	0.0	135.5	-12.41	-0.07	5.37e-05	1.33e-03	7.28e-05	0.94
14	10	1.26	1.07e-04	-2.13e-04	-1.97	0.0	-16.00	1.92	7.93e-05	1.97e-03	0.0	0.0
		0.0	0.0	-2.14e-04	0.0	135.5	-15.84	-0.05	7.93e-05	1.97e-03	1.07e-04	1.26
14	16	0.98	8.56e-05	-1.65e-04	-1.52	0.0	-12.24	1.48	6.32e-05	1.57e-03	0.0	0.0
		0.0	0.0	-1.64e-04	0.0	135.5	-12.12	-0.03	6.32e-05	1.57e-03	8.56e-05	0.98
14	28	1.21	0.0	-2.46e-04	-1.52	0.0	-10.81	1.65	-0.02	0.09	0.0	0.0
		0.0	-0.03	-3.01e-05	0.0	135.5	-10.69	0.14	-0.02	0.09	-0.03	1.21
14	30	0.72	0.0	-8.38e-05	-1.52	0.0	-14.42	1.27	-0.15	-0.07	0.0	0.0
		0.0	-0.21	-1.17e-04	0.0	135.5	-14.30	-0.25	-0.15	-0.07	-0.21	0.69
14	31	1.19	0.21	-2.39e-04	-1.52	0.0	-10.64	1.64	0.15	0.07	0.0	0.0
		0.0	0.0	-1.84e-04	0.0	135.5	-10.52	0.12	0.15	0.07	0.21	1.19
14	45	0.73	0.34	-9.43e-05	-1.52	0.0	-13.73	1.28	0.25	-0.06	0.0	0.0
		0.0	0.0	-4.28e-04	0.0	135.5	-13.60	-0.24	0.25	-0.06	0.34	0.71
14	50	0.81	0.0	-1.16e-04	-1.52	0.0	-14.32	1.34	-0.33	-0.01	0.0	0.0
		0.0	-0.45	8.51e-05	0.0	135.5	-14.19	-0.17	-0.33	-0.01	-0.45	0.79
14	51	1.09	0.45	-2.06e-04	-1.52	0.0	-10.75	1.56	0.33	0.02	0.0	0.0
		0.0	0.0	-3.86e-04	0.0	135.5	-10.62	0.04	0.33	0.02	0.45	1.09
14	60	1.26	0.0	-2.59e-04	-1.52	0.0	-10.54	1.69	-0.02	0.10	0.0	0.0
		0.0	-0.03	-1.02e-05	0.0	135.5	-10.41	0.17	-0.02	0.10	-0.03	1.26
14	62	0.69	0.0	-7.11e-05	-1.52	0.0	-14.73	1.24	-0.18	-0.08	0.0	0.0
		0.0	-0.24	-1.12e-04	0.0	135.5	-14.60	-0.28	-0.18	-0.08	-0.24	0.65
14	63	1.23	0.24	-2.52e-04	-1.52	0.0	-10.34	1.67	0.18	0.08	0.0	0.0
		0.0	0.0	-1.89e-04	0.0	135.5	-10.21	0.15	0.18	0.08	0.24	1.23
14	77	0.70	0.39	-8.35e-05	-1.52	0.0	-13.91	1.26	0.29	-0.07	0.0	0.0
		0.0	0.0	-4.73e-04	0.0	135.5	-13.78	-0.26	0.29	-0.07	0.39	0.67
14	82	0.79	0.0	-1.09e-04	-1.52	0.0	-14.59	1.33	-0.38	-0.01	0.0	0.0
		0.0	-0.52	1.23e-04	0.0	135.5	-14.47	-0.19	-0.38	-0.01	-0.52	0.77
14	83	1.11	0.52	-2.14e-04	-1.52	0.0	-10.47	1.58	0.38	0.02	0.0	0.0
		0.0	0.0	-4.24e-04	0.0	135.5	-10.35	0.06	0.38	0.02	0.52	1.11
14	92	1.35	0.0	-2.87e-04	-1.52	0.0	-9.93	1.75	-0.03	0.13	0.0	0.0
		0.0	-0.04	2.96e-05	0.0	135.5	-9.80	0.24	-0.03	0.13	-0.04	1.35
14	94	0.62	0.0	-4.55e-05	-1.52	0.0	-15.37	1.18	-0.23	-0.10	0.0	0.0
		0.0	-0.31	-1.02e-04	0.0	135.5	-15.25	-0.34	-0.23	-0.10	-0.31	0.57
14	95	1.31	0.31	-2.77e-04	-1.52	0.0	-9.69	1.73	0.23	0.10	0.0	0.0
		0.0	0.0	-2.00e-04	0.0	135.5	-9.57	0.21	0.23	0.10	0.31	1.31
14	109	0.64	0.50	-6.15e-05	-1.52	0.0	-14.44	1.20	0.37	-0.09	0.0	0.0
		0.0	0.0	-5.64e-04	0.0	135.5	-14.31	-0.32	0.37	-0.09	0.50	0.59
14	114	0.74	0.0	-9.38e-05	-1.52	0.0	-15.25	1.29	-0.49	-0.02	0.0	0.0
		0.0	-0.66	2.00e-04	0.0	135.5	-15.12	-0.23	-0.49	-0.02	-0.66	0.72
14	115	1.16	0.66	-2.29e-04	-1.52	0.0	-9.82	1.62	0.49	0.02	0.0	0.0
		0.0	0.0	-5.01e-04	0.0	135.5	-9.69	0.10	0.49	0.02	0.66	1.16
14	121	0.94	7.28e-05	-1.61e-04	-1.52	0.0	-12.53	1.45	5.38e-05	1.33e-03	0.0	0.0
		0.0	0.0	-1.65e-04	0.0	135.5	-12.41	-0.07	5.38e-05	1.33e-03	7.28e-05	0.94
14	123	0.94	7.28e-05	-1.61e-04	-1.52	0.0	-12.53	1.45	5.37e-05	1.33e-03	0.0	0.0
		0.0	0.0	-1.42e-04	0.0	135.5	-12.41	-0.07	5.37e-05	1.33e-03	7.28e-05	0.94
14	126	0.97	8.13e-05	-1.63e-04	-1.52	0.0	-12.34	1.47	6.00e-05	1.49e-03	0.0	0.0
		0.0	0.0	-1.64e-04	0.0	135.5	-12.21	-0.04	6.00e-05	1.49e-03	8.13e-05	0.97
14	133	0.94	7.28e-05	-1.61e-04	-1.52	0.0	-12.53	1.45	5.38e-05	1.33e-03	0.0	0.0
		0.0	0.0	-1.65e-04	0.0	135.5	-12.41	-0.07	5.38e-05	1.33e-03	7.28e-05	0.94
14	134	0.94	7.28e-05	-1.61e-04	-1.52	0.0	-12.53	1.45	5.37e-05	1.33e-03	0.0	0.0
		0.0	0.0	-1.48e-04	0.0	135.5	-12.41	-0.07	5.37e-05	1.33e-03	7.28e-05	0.94
14	136	0.94	7.40e-05	-1.62e-04	-1.52	0.0	-12.50	1.46	5.47e-05	1.36e-03	0.0	0.0
		0.0	0.0	-1.64e-04	0.0	135.5	-12.38	-0.06	5.47e-05	1.36e-03	7.40e-05	0.94
14	138	0.94	7.28e-05	-1.61e-04	-1.52	0.0	-12.53	1.45	5.38e-05	1.33e-03	0.0	0.0
		0.0	0.0	-1.65e-04	0.0	135.5	-12.41	-0.07	5.38e-05	1.33e-03	7.28e-05	0.94
14	139	0.94	7.28e-05	-1.61e-04	-1.52	0.0	-12.53	1.45	5.37e-05	1.33e-03	0.0	0.0
		0.0	0.0	-1.51e-04	0.0	135.5	-12.41	-0.07	5.37e-05	1.33e-03	7.28e-05	0.94

15	3	3.35	-9.64e-05	6.43e-05	-1.97	0.0	-15.93	2.56	6.98e-05	1.73e-03	-1.91e-04	1.22
		1.22	-1.91e-04	1.88e-04	0.0	135.5	-16.09	0.59	6.98e-05	1.73e-03	-9.64e-05	3.35
15	7	2.58	-7.41e-05	4.94e-05	-1.52	0.0	-12.25	1.97	5.37e-05	1.33e-03	-1.47e-04	0.94
		0.94	-1.47e-04	1.37e-04	0.0	135.5	-12.38	0.45	5.37e-05	1.33e-03	-7.41e-05	2.58
15	10	3.37	-1.09e-04	6.68e-05	-1.97	0.0	-15.63	2.54	7.93e-05	1.96e-03	-2.17e-04	1.26
		1.26	-2.17e-04	2.23e-04	0.0	135.5	-15.80	0.57	7.93e-05	1.96e-03	-1.09e-04	3.37
15	16	2.60	-8.72e-05	5.20e-05	-1.52	0.0	-11.96	1.95	6.32e-05	1.56e-03	-1.73e-04	0.98
		0.98	-1.73e-04	1.71e-04	0.0	135.5	-12.08	0.44	6.32e-05	1.56e-03	-8.72e-05	2.60
15	25	2.38	0.22	9.68e-05	-1.52	0.0	-14.08	2.07	0.01	-0.07	0.18	0.67
		0.67	0.18	1.01e-04	0.0	135.5	-14.20	0.56	0.01	-0.07	0.22	2.38
15	30	2.38	-0.05	1.00e-04	-1.52	0.0	-14.25	2.08	-0.03	-0.10	-0.05	0.69
		0.69	-0.07	2.85e-05	0.0	135.5	-14.38	0.57	-0.03	-0.10	-0.07	2.38
15	31	2.77	0.07	-4.87e-05	-1.52	0.0	-10.25	1.85	0.03	0.10	0.05	1.19
		1.19	0.05	2.86e-04	0.0	135.5	-10.37	0.34	0.03	0.10	0.07	2.77
15	44	2.88	-0.39	-4.13e-05	-1.52	0.0	-11.02	1.86	-0.06	6.45e-03	-0.39	1.17
		1.17	-0.48	9.89e-05	0.0	135.5	-11.14	0.34	-0.06	6.45e-03	-0.48	2.88
15	53	2.79	0.54	-3.22e-05	-1.52	0.0	-11.38	1.87	0.07	0.04	0.44	0.95
		0.95	0.44	2.86e-04	0.0	135.5	-11.51	0.35	0.07	0.04	0.54	2.79
15	56	2.37	-0.44	7.20e-05	-1.52	0.0	-13.12	2.07	-0.07	-0.04	-0.44	0.92
		0.92	-0.54	5.82e-05	0.0	135.5	-13.24	0.55	-0.07	-0.04	-0.54	2.37
15	57	2.34	0.25	1.05e-04	-1.52	0.0	-14.37	2.09	0.01	-0.08	0.21	0.62
		0.62	0.21	9.18e-05	0.0	135.5	-14.50	0.57	0.01	-0.08	0.25	2.34
15	62	2.35	-0.06	1.09e-04	-1.52	0.0	-14.57	2.10	-0.04	-0.11	-0.06	0.65
		0.65	-0.08	1.06e-05	0.0	135.5	-14.70	0.58	-0.04	-0.11	-0.08	2.35
15	63	2.80	0.08	-5.42e-05	-1.52	0.0	-9.93	1.84	0.04	0.12	0.06	1.23
		1.23	0.06	3.08e-04	0.0	135.5	-10.05	0.32	0.04	0.12	0.08	2.80
15	76	2.93	-0.45	-4.50e-05	-1.52	0.0	-10.83	1.84	-0.07	7.57e-03	-0.45	1.21
		1.21	-0.55	9.50e-05	0.0	135.5	-10.96	0.33	-0.07	7.57e-03	-0.55	2.93
15	85	2.82	0.63	-3.42e-05	-1.52	0.0	-11.26	1.85	0.08	0.05	0.51	0.95
		0.95	0.51	3.07e-04	0.0	135.5	-11.38	0.34	0.08	0.05	0.63	2.82
15	88	2.34	-0.51	7.56e-05	-1.52	0.0	-13.24	2.09	-0.08	-0.05	-0.51	0.92
		0.92	-0.63	5.32e-05	0.0	135.5	-13.37	0.57	-0.08	-0.05	-0.63	2.34
15	89	2.27	0.32	1.20e-04	-1.52	0.0	-15.01	2.13	0.02	-0.11	0.27	0.53
		0.53	0.27	7.30e-05	0.0	135.5	-15.14	0.61	0.02	-0.11	0.32	2.27
15	94	2.28	-0.08	1.25e-04	-1.52	0.0	-15.25	2.14	-0.05	-0.15	-0.08	0.57
		0.57	-0.11	-3.52e-05	0.0	135.5	-15.38	0.62	-0.05	-0.15	-0.11	2.28
15	95	2.88	0.11	-6.52e-05	-1.52	0.0	-9.25	1.80	0.05	0.15	0.08	1.31
		1.31	0.08	3.50e-04	0.0	135.5	-9.37	0.28	0.05	0.15	0.11	2.88
15	108	3.05	-0.57	-5.27e-05	-1.52	0.0	-10.29	1.80	-0.09	9.72e-03	-0.57	1.29
		1.29	-0.71	9.07e-05	0.0	135.5	-10.42	0.28	-0.09	9.72e-03	-0.71	3.05
15	117	2.90	0.80	-3.88e-05	-1.52	0.0	-10.91	1.81	0.11	0.06	0.65	0.96
		0.96	0.65	3.49e-04	0.0	135.5	-11.03	0.30	0.11	0.06	0.80	2.90
15	120	2.26	-0.65	8.29e-05	-1.52	0.0	-13.59	2.13	-0.11	-0.06	-0.65	0.91
		0.91	-0.80	4.68e-05	0.0	135.5	-13.72	0.61	-0.11	-0.06	-0.80	2.26
15	123	2.58	-7.41e-05	4.94e-05	-1.52	0.0	-12.25	1.97	5.37e-05	1.33e-03	-1.47e-04	0.94
		0.94	-1.47e-04	1.48e-04	0.0	135.5	-12.38	0.45	5.37e-05	1.33e-03	-7.41e-05	2.58
15	126	2.59	-8.28e-05	5.11e-05	-1.52	0.0	-12.06	1.96	6.00e-05	1.48e-03	-1.64e-04	0.97
		0.97	-1.64e-04	1.71e-04	0.0	135.5	-12.18	0.44	6.00e-05	1.48e-03	-8.28e-05	2.59
15	134	2.58	-7.42e-05	4.94e-05	-1.52	0.0	-12.25	1.97	5.37e-05	1.33e-03	-1.47e-04	0.94
		0.94	-1.47e-04	1.55e-04	0.0	135.5	-12.38	0.45	5.37e-05	1.33e-03	-7.42e-05	2.58
15	136	2.58	-7.54e-05	4.97e-05	-1.52	0.0	-12.22	1.97	5.47e-05	1.35e-03	-1.49e-04	0.94
		0.94	-1.49e-04	1.71e-04	0.0	135.5	-12.35	0.45	5.47e-05	1.35e-03	-7.54e-05	2.58
15	138	2.58	-7.42e-05	4.95e-05	-1.52	0.0	-12.25	1.97	5.38e-05	1.33e-03	-1.47e-04	0.94
		0.94	-1.47e-04	1.71e-04	0.0	135.5	-12.37	0.45	5.38e-05	1.33e-03	-7.42e-05	2.58
15	139	2.58	-7.42e-05	4.94e-05	-1.52	0.0	-12.25	1.97	5.37e-05	1.33e-03	-1.47e-04	0.94
		0.94	-1.47e-04	1.57e-04	0.0	135.5	-12.38	0.45	5.37e-05	1.33e-03	-7.42e-05	2.58
16	3	4.05	-2.19e-04	-2.76e-04	-1.97	0.0	-25.05	-0.08	-1.59e-04	-5.26e-03	-2.19e-04	4.05
		2.60	-4.34e-04	-1.88e-04	0.0	135.5	-24.89	-2.05	-1.59e-04	-5.26e-03	-4.34e-04	2.60
16	7	3.12	-1.69e-04	-2.12e-04	-1.52	0.0	-19.27	-0.06	-1.22e-04	-4.05e-03	-1.69e-04	3.12
		2.00	-3.34e-04	-1.36e-04	0.0	135.5	-19.14	-1.58	-1.22e-04	-4.05e-03	-3.34e-04	2.00
16	10	4.08	-2.30e-04	-2.80e-04	-1.97	0.0	-24.81	-0.06	-1.67e-04	-5.53e-03	-2.30e-04	4.08
		2.66	-4.57e-04	-2.22e-04	0.0	135.5	-24.65	-2.04	-1.67e-04	-5.53e-03	-4.57e-04	2.66
16	16	3.14	-1.80e-04	-2.16e-04	-1.52	0.0	-19.03	-0.04	-1.30e-04	-4.32e-03	-1.80e-04	3.14
		2.06	-3.56e-04	-1.71e-04	0.0	135.5	-18.90	-1.56	-1.30e-04	-4.32e-03	-3.56e-04	2.06
16	41	2.78	1.23	-1.78e-04	-1.52	0.0	-20.94	-0.14	0.18	-0.17	0.99	2.78
		1.69	0.99	-7.42e-04	0.0	135.5	-20.81	-1.65	0.18	-0.17	1.23	1.69
16	44	3.46	-0.99	-2.48e-04	-1.52	0.0	-17.60	0.01	-0.18	0.16	-0.99	3.46
		2.31	-1.23	4.27e-04	0.0	135.5	-17.47	-1.51	-0.18	0.16	-1.23	2.31
16	46	3.42	-1.19	-2.44e-04	-1.52	0.0	-18.02	-0.03	-0.22	0.10	-1.19	3.42
		2.22	-1.49	3.23e-04	0.0	135.5	-17.89	-1.55	-0.22	0.10	-1.49	2.22
16	47	2.82	1.49	-1.81e-04	-1.52	0.0	-20.52	-0.10	0.22	-0.11	1.19	2.82
		1.78	1.19	-6.23e-04	0.0	135.5	-20.39	-1.62	0.22	-0.11	1.49	1.78
16	49	2.81	1.02	-2.08e-04	-1.52	0.0	-21.27	-0.16	0.12	-0.11	0.85	2.81
		1.78	0.85	-5.91e-04	0.0	135.5	-21.15	-1.68	0.12	-0.11	1.02	1.78
16	52	3.42	-0.85	-2.18e-04	-1.52	0.0	-17.27	0.04	-0.12	0.10	-0.85	3.42
		2.23	-1.02	2.79e-04	0.0	135.5	-17.14	-1.48	-0.12	0.10	-1.02	2.23
16	73	2.72	1.42	-1.72e-04	-1.52	0.0	-21.19	-0.15	0.21	-0.19	1.14	2.72
		1.64	1.14	-8.36e-04	0.0	135.5	-21.06	-1.67	0.21	-0.19	1.42	1.64

16	76	3.51	-1.14	-2.53e-04	-1.52	0.0	-17.35	0.02	-0.21	0.18	-1.14	3.51
		2.36	-1.42	5.21e-04	0.0	135.5	-17.22	-1.50	-0.21	0.18	-1.42	2.36
16	78	3.46	-1.37	-2.49e-04	-1.52	0.0	-17.83	-0.02	-0.26	0.11	-1.37	3.46
		2.26	-1.72	3.96e-04	0.0	135.5	-17.71	-1.54	-0.26	0.11	-1.72	2.26
16	79	2.77	1.72	-1.76e-04	-1.52	0.0	-20.70	-0.10	0.26	-0.12	1.37	2.77
		1.75	1.37	-6.99e-04	0.0	135.5	-20.58	-1.62	0.26	-0.12	1.72	1.75
16	81	2.77	1.17	-2.07e-04	-1.52	0.0	-21.57	-0.18	0.14	-0.13	0.97	2.77
		1.75	0.97	-6.59e-04	0.0	135.5	-21.45	-1.70	0.14	-0.13	1.17	1.75
16	84	3.47	-0.97	-2.19e-04	-1.52	0.0	-16.96	0.06	-0.14	0.12	-0.97	3.47
		2.26	-1.17	3.46e-04	0.0	135.5	-16.84	-1.46	-0.14	0.12	-1.17	2.26
16	105	2.60	1.81	-1.61e-04	-1.52	0.0	-21.87	-0.18	0.26	-0.24	1.46	2.60
		1.54	1.46	-1.02e-03	0.0	135.5	-21.75	-1.70	0.26	-0.24	1.81	1.54
16	108	3.63	-1.46	-2.65e-04	-1.52	0.0	-16.66	0.06	-0.26	0.23	-1.46	3.63
		2.47	-1.81	7.09e-04	0.0	135.5	-16.54	-1.46	-0.26	0.23	-1.81	2.47
16	110	3.57	-1.74	-2.59e-04	-1.52	0.0	-17.29	-4.79e-04	-0.33	0.15	-1.74	3.57
		2.33	-2.18	5.45e-04	0.0	135.5	-17.16	-1.52	-0.33	0.15	-2.18	2.33
16	111	2.66	2.18	-1.66e-04	-1.52	0.0	-21.25	-0.12	0.32	-0.15	1.74	2.66
		1.67	1.74	-8.50e-04	0.0	135.5	-21.12	-1.64	0.32	-0.15	2.18	1.67
16	113	2.66	1.47	-2.05e-04	-1.52	0.0	-22.32	-0.22	0.18	-0.16	1.23	2.66
		1.67	1.23	-7.95e-04	0.0	135.5	-22.19	-1.74	0.18	-0.16	1.47	1.67
16	116	3.58	-1.23	-2.21e-04	-1.52	0.0	-16.22	0.09	-0.18	0.15	-1.23	3.58
		2.34	-1.47	4.80e-04	0.0	135.5	-16.09	-1.42	-0.18	0.15	-1.47	2.34
16	123	3.12	-1.69e-04	-2.12e-04	-1.52	0.0	-19.27	-0.06	-1.22e-04	-4.05e-03	-1.69e-04	3.12
		2.00	-3.34e-04	-1.48e-04	0.0	135.5	-19.14	-1.58	-1.22e-04	-4.05e-03	-3.34e-04	2.00
16	126	3.13	-1.76e-04	-2.15e-04	-1.52	0.0	-19.11	-0.05	-1.28e-04	-4.23e-03	-1.76e-04	3.13
		2.04	-3.49e-04	-1.71e-04	0.0	135.5	-18.98	-1.57	-1.28e-04	-4.23e-03	-3.49e-04	2.04
16	134	3.12	-1.69e-04	-2.12e-04	-1.52	0.0	-19.27	-0.06	-1.22e-04	-4.05e-03	-1.69e-04	3.12
		2.00	-3.34e-04	-1.55e-04	0.0	135.5	-19.14	-1.58	-1.22e-04	-4.05e-03	-3.34e-04	2.00
16	136	3.12	-1.70e-04	-2.13e-04	-1.52	0.0	-19.24	-0.06	-1.23e-04	-4.07e-03	-1.70e-04	3.12
		2.01	-3.36e-04	-1.71e-04	0.0	135.5	-19.12	-1.58	-1.23e-04	-4.07e-03	-3.36e-04	2.01
16	138	3.12	-1.69e-04	-2.12e-04	-1.52	0.0	-19.27	-0.06	-1.22e-04	-4.05e-03	-1.69e-04	3.12
		2.00	-3.34e-04	-1.71e-04	0.0	135.5	-19.14	-1.58	-1.22e-04	-4.05e-03	-3.34e-04	2.00
16	139	3.12	-1.69e-04	-2.12e-04	-1.52	0.0	-19.27	-0.06	-1.22e-04	-4.05e-03	-1.69e-04	3.12
		2.00	-3.34e-04	-1.57e-04	0.0	135.5	-19.14	-1.58	-1.22e-04	-4.05e-03	-3.34e-04	2.00
17	3	4.05	4.34e-04	2.90e-04	-1.97	0.0	-24.89	2.05	-1.59e-04	-5.26e-03	4.34e-04	2.60
		2.60	2.19e-04	1.80e-04	0.0	135.5	-25.05	0.08	-1.59e-04	-5.26e-03	2.19e-04	4.05
17	7	3.12	3.34e-04	2.23e-04	-1.52	0.0	-19.14	1.58	-1.22e-04	-4.05e-03	3.34e-04	2.00
		2.00	1.69e-04	1.31e-04	0.0	135.5	-19.27	0.06	-1.22e-04	-4.05e-03	1.69e-04	3.12
17	10	4.08	4.57e-04	2.94e-04	-1.97	0.0	-24.65	2.04	-1.67e-04	-5.53e-03	4.57e-04	2.66
		2.66	2.30e-04	2.14e-04	0.0	135.5	-24.81	0.06	-1.67e-04	-5.53e-03	2.30e-04	4.08
17	16	3.14	3.56e-04	2.27e-04	-1.52	0.0	-18.90	1.56	-1.30e-04	-4.32e-03	3.56e-04	2.06
		2.06	1.80e-04	1.65e-04	0.0	135.5	-19.03	0.04	-1.30e-04	-4.32e-03	1.80e-04	3.14
17	41	2.77	1.49	1.97e-04	-1.52	0.0	-20.84	1.65	-0.18	0.07	1.49	1.69
		1.69	1.25	6.46e-04	0.0	135.5	-20.96	0.14	-0.18	0.07	1.25	2.77
17	44	3.47	-1.25	2.49e-04	-1.52	0.0	-17.45	1.51	0.18	-0.08	-1.49	2.31
		2.31	-1.49	-3.44e-04	0.0	135.5	-17.58	-0.01	0.18	-0.08	-1.25	3.47
17	45	2.77	1.49	1.98e-04	-1.52	0.0	-20.83	1.65	-0.18	0.07	1.49	1.69
		1.69	1.25	6.47e-04	0.0	135.5	-20.95	0.13	-0.18	0.07	1.25	2.77
17	48	3.46	-1.25	2.48e-04	-1.52	0.0	-17.46	1.51	0.18	-0.08	-1.49	2.31
		2.31	-1.49	-3.45e-04	0.0	135.5	-17.58	-0.01	0.18	-0.08	-1.25	3.46
17	49	2.81	1.27	1.82e-04	-1.52	0.0	-21.18	1.67	-0.20	0.09	1.27	1.78
		1.78	1.00	6.04e-04	0.0	135.5	-21.31	0.16	-0.20	0.09	1.00	2.81
17	52	3.42	-1.00	2.64e-04	-1.52	0.0	-17.10	1.49	0.20	-0.10	-1.27	2.23
		2.23	-1.27	-3.01e-04	0.0	135.5	-17.23	-0.03	0.20	-0.10	-1.00	3.42
17	73	2.71	1.72	1.94e-04	-1.52	0.0	-21.09	1.67	-0.21	0.08	1.72	1.64
		1.64	1.44	7.25e-04	0.0	135.5	-21.22	0.15	-0.21	0.08	1.44	2.71
17	76	3.52	-1.44	2.53e-04	-1.52	0.0	-17.20	1.50	0.21	-0.09	-1.72	2.36
		2.36	-1.72	-4.23e-04	0.0	135.5	-17.32	-0.02	0.21	-0.09	-1.44	3.52
17	77	2.72	1.73	1.94e-04	-1.52	0.0	-21.08	1.66	-0.21	0.08	1.73	1.65
		1.65	1.44	7.26e-04	0.0	135.5	-21.21	0.15	-0.21	0.08	1.44	2.72
17	80	3.52	-1.44	2.52e-04	-1.52	0.0	-17.20	1.50	0.21	-0.09	-1.73	2.36
		2.36	-1.73	-4.24e-04	0.0	135.5	-17.33	-0.02	0.21	-0.09	-1.44	3.52
17	81	2.77	1.46	1.76e-04	-1.52	0.0	-21.49	1.69	-0.23	0.11	1.46	1.75
		1.75	1.15	6.74e-04	0.0	135.5	-21.61	0.17	-0.23	0.11	1.15	2.77
17	84	3.47	-1.15	2.70e-04	-1.52	0.0	-16.80	1.47	0.23	-0.11	-1.46	2.26
		2.26	-1.46	-3.72e-04	0.0	135.5	-16.92	-0.05	0.23	-0.11	-1.15	3.47
17	105	2.59	2.19	1.85e-04	-1.52	0.0	-21.78	1.70	-0.26	0.11	2.19	1.54
		1.54	1.83	8.82e-04	0.0	135.5	-21.91	0.18	-0.26	0.11	1.83	2.59
17	108	3.65	-1.83	2.62e-04	-1.52	0.0	-16.50	1.46	0.26	-0.12	-2.19	2.47
		2.47	-2.19	-5.80e-04	0.0	135.5	-16.63	-0.06	0.26	-0.12	-1.83	3.65
17	109	2.59	2.19	1.86e-04	-1.52	0.0	-21.77	1.70	-0.26	0.11	2.19	1.54
		1.54	1.83	8.83e-04	0.0	135.5	-21.90	0.18	-0.26	0.11	1.83	2.59
17	112	3.64	-1.83	2.60e-04	-1.52	0.0	-16.51	1.46	0.26	-0.12	-2.19	2.47
		2.47	-2.19	-5.81e-04	0.0	135.5	-16.64	-0.06	0.26	-0.12	-1.83	3.64
17	113	2.66	1.84	1.62e-04	-1.52	0.0	-22.25	1.72	-0.29	0.13	1.84	1.67
		1.67	1.45	8.14e-04	0.0	135.5	-22.37	0.21	-0.29	0.13	1.45	2.66
17	116	3.58	-1.45	2.84e-04	-1.52	0.0	-16.04	1.44	0.29	-0.14	-1.83	2.34
		2.34	-1.83	-5.12e-04	0.0	135.5	-16.16	-0.08	0.29	-0.14	-1.45	3.58

17	123	3.12	3.34e-04	2.23e-04	-1.52	0.0	-19.14	1.58	-1.22e-04	-4.05e-03	3.34e-04	2.00
		2.00	1.69e-04	1.42e-04	0.0	135.5	-19.27	0.06	-1.22e-04	-4.05e-03	1.69e-04	3.12
17	126	3.13	3.49e-04	2.26e-04	-1.52	0.0	-18.98	1.57	-1.28e-04	-4.23e-03	3.49e-04	2.04
		2.04	1.76e-04	1.65e-04	0.0	135.5	-19.11	0.05	-1.28e-04	-4.23e-03	1.76e-04	3.13
17	134	3.12	3.34e-04	2.23e-04	-1.52	0.0	-19.14	1.58	-1.22e-04	-4.05e-03	3.34e-04	2.00
		2.00	1.69e-04	1.49e-04	0.0	135.5	-19.27	0.06	-1.22e-04	-4.05e-03	1.69e-04	3.12
17	136	3.12	3.36e-04	2.24e-04	-1.52	0.0	-19.12	1.58	-1.23e-04	-4.07e-03	3.36e-04	2.01
		2.01	1.70e-04	1.65e-04	0.0	135.5	-19.24	0.06	-1.23e-04	-4.07e-03	1.70e-04	3.12
17	138	3.12	3.34e-04	2.23e-04	-1.52	0.0	-19.14	1.58	-1.22e-04	-4.05e-03	3.34e-04	2.00
		2.00	1.69e-04	1.65e-04	0.0	135.5	-19.27	0.06	-1.22e-04	-4.05e-03	1.69e-04	3.12
17	139	3.12	3.34e-04	2.23e-04	-1.52	0.0	-19.14	1.58	-1.22e-04	-4.05e-03	3.34e-04	2.00
		2.00	1.69e-04	1.51e-04	0.0	135.5	-19.27	0.06	-1.22e-04	-4.05e-03	1.69e-04	3.12
18	3	3.89	-3.28e-04	-1.46e-04	-1.32	0.0	-15.50	-0.20	-2.37e-04	-5.48e-03	-3.28e-04	3.89
		3.11	-5.42e-04	-1.42e-04	0.0	90.4	-15.37	-1.52	-2.37e-04	-5.48e-03	-5.42e-04	3.11
18	7	2.99	-2.52e-04	-1.12e-04	-1.01	0.0	-11.92	-0.16	-1.82e-04	-4.21e-03	-2.52e-04	2.99
		2.39	-4.16e-04	-1.03e-04	0.0	90.4	-11.82	-1.17	-1.82e-04	-4.21e-03	-4.16e-04	2.39
18	10	3.97	-4.19e-04	-1.52e-04	-1.32	0.0	-14.91	-0.15	-3.03e-04	-7.01e-03	-4.19e-04	3.97
		3.24	-6.93e-04	-1.69e-04	0.0	90.4	-14.78	-1.46	-3.03e-04	-7.01e-03	-6.93e-04	3.24
18	16	3.07	-3.43e-04	-1.18e-04	-1.01	0.0	-11.34	-0.10	-2.48e-04	-5.74e-03	-3.43e-04	3.07
		2.52	-5.67e-04	-1.30e-04	0.0	90.4	-11.24	-1.11	-2.48e-04	-5.74e-03	-5.67e-04	2.52
18	50	3.41	-1.02	-1.29e-04	-1.01	0.0	-10.93	-0.09	-0.12	0.04	-1.02	3.41
		2.82	-1.14	9.25e-05	0.0	90.4	-10.83	-1.10	-0.12	0.04	-1.14	2.82
18	51	2.57	1.13	-9.52e-05	-1.01	0.0	-12.92	-0.22	0.12	-0.04	1.02	2.57
		1.97	1.02	-3.20e-04	0.0	90.4	-12.82	-1.23	0.12	-0.04	1.13	1.97
18	74	3.36	-0.84	-1.34e-04	-1.01	0.0	-10.78	-0.10	-0.10	0.06	-0.84	3.36
		2.74	-0.92	9.08e-05	0.0	90.4	-10.68	-1.11	-0.10	0.06	-0.92	2.74
18	75	2.62	0.92	-9.01e-05	-1.01	0.0	-13.06	-0.22	0.10	-0.06	0.83	2.62
		2.04	0.83	-3.24e-04	0.0	90.4	-12.96	-1.23	0.10	-0.06	0.92	2.04
18	82	3.48	-1.18	-1.32e-04	-1.01	0.0	-10.79	-0.08	-0.14	0.04	-1.18	3.48
		2.88	-1.31	1.22e-04	0.0	90.4	-10.69	-1.09	-0.14	0.04	-1.31	2.88
18	83	2.50	1.31	-9.25e-05	-1.01	0.0	-13.06	-0.23	0.14	-0.05	1.18	2.50
		1.90	1.18	-3.52e-04	0.0	90.4	-12.95	-1.24	0.14	-0.05	1.31	1.90
18	106	3.48	-1.07	-1.41e-04	-1.01	0.0	-10.34	-0.07	-0.12	0.07	-1.07	3.48
		2.84	-1.18	1.45e-04	0.0	90.4	-10.24	-1.08	-0.12	0.07	-1.18	2.84
18	107	2.50	1.18	-8.40e-05	-1.01	0.0	-13.50	-0.24	0.12	-0.08	1.07	2.50
		1.94	1.07	-3.82e-04	0.0	90.4	-13.40	-1.26	0.12	-0.08	1.18	1.94
18	114	3.62	-1.51	-1.38e-04	-1.01	0.0	-10.36	-0.05	-0.18	0.05	-1.51	3.62
		3.02	-1.68	1.84e-04	0.0	90.4	-10.25	-1.07	-0.18	0.05	-1.68	3.02
18	115	2.36	1.68	-8.69e-05	-1.01	0.0	-13.49	-0.26	0.18	-0.06	1.51	2.36
		1.76	1.51	-4.17e-04	0.0	90.4	-13.39	-1.27	0.18	-0.06	1.68	1.76
18	123	2.99	-2.52e-04	-1.12e-04	-1.01	0.0	-11.92	-0.16	-1.83e-04	-4.22e-03	-2.52e-04	2.99
		2.39	-4.17e-04	-1.12e-04	0.0	90.4	-11.82	-1.17	-1.83e-04	-4.22e-03	-4.17e-04	2.39
18	126	3.04	-3.13e-04	-1.16e-04	-1.01	0.0	-11.53	-0.12	-2.27e-04	-5.24e-03	-3.13e-04	3.04
		2.48	-5.18e-04	-1.30e-04	0.0	90.4	-11.43	-1.13	-2.27e-04	-5.24e-03	-5.18e-04	2.48
18	134	2.99	-2.53e-04	-1.12e-04	-1.01	0.0	-11.92	-0.16	-1.83e-04	-4.23e-03	-2.53e-04	2.99
		2.39	-4.18e-04	-1.17e-04	0.0	90.4	-11.82	-1.17	-1.83e-04	-4.23e-03	-4.18e-04	2.39
18	136	3.00	-2.62e-04	-1.13e-04	-1.01	0.0	-11.86	-0.15	-1.89e-04	-4.38e-03	-2.62e-04	3.00
		2.40	-4.33e-04	-1.30e-04	0.0	90.4	-11.76	-1.16	-1.89e-04	-4.38e-03	-4.33e-04	2.40
18	138	2.99	-2.53e-04	-1.12e-04	-1.01	0.0	-11.92	-0.16	-1.83e-04	-4.24e-03	-2.53e-04	2.99
		2.39	-4.19e-04	-1.30e-04	0.0	90.4	-11.82	-1.17	-1.83e-04	-4.24e-03	-4.19e-04	2.39
18	139	2.99	-2.53e-04	-1.12e-04	-1.01	0.0	-11.92	-0.16	-1.83e-04	-4.23e-03	-2.53e-04	2.99
		2.39	-4.18e-04	-1.19e-04	0.0	90.4	-11.82	-1.17	-1.83e-04	-4.23e-03	-4.18e-04	2.39
19	3	3.89	5.42e-04	1.18e-04	-1.32	0.0	-15.37	1.52	-2.37e-04	-5.48e-03	5.42e-04	3.11
		3.11	3.28e-04	1.52e-04	0.0	90.4	-15.50	0.20	-2.37e-04	-5.48e-03	3.28e-04	3.89
19	7	2.99	4.16e-04	9.08e-05	-1.01	0.0	-11.82	1.17	-1.82e-04	-4.21e-03	4.16e-04	2.39
		2.39	2.52e-04	1.10e-04	0.0	90.4	-11.92	0.16	-1.82e-04	-4.21e-03	2.52e-04	2.99
19	10	3.97	6.93e-04	1.21e-04	-1.32	0.0	-14.78	1.46	-3.03e-04	-7.01e-03	6.93e-04	3.24
		3.24	4.19e-04	1.79e-04	0.0	90.4	-14.91	0.15	-3.03e-04	-7.01e-03	4.19e-04	3.97
19	16	3.07	5.67e-04	9.42e-05	-1.01	0.0	-11.24	1.11	-2.48e-04	-5.74e-03	5.67e-04	2.52
		2.52	3.43e-04	1.38e-04	0.0	90.4	-11.34	0.10	-2.48e-04	-5.74e-03	3.43e-04	3.07
19	49	2.62	1.13	6.31e-05	-1.01	0.0	-12.45	1.20	-0.13	0.09	1.13	2.02
		2.02	1.00	2.98e-04	0.0	90.4	-12.55	0.19	-0.13	0.09	1.00	2.62
19	50	3.41	-0.67	1.02e-04	-1.01	0.0	-10.85	1.10	0.09	-0.17	-0.75	2.82
		2.82	-0.75	-1.27e-04	0.0	90.4	-10.95	0.09	0.09	-0.17	-0.67	3.41
19	51	2.57	0.75	7.99e-05	-1.01	0.0	-12.79	1.24	-0.09	0.16	0.75	1.97
		1.97	0.67	3.81e-04	0.0	90.4	-12.89	0.23	-0.09	0.16	0.67	2.57
19	52	3.36	-1.00	1.18e-04	-1.01	0.0	-11.19	1.13	0.13	-0.09	-1.12	2.76
		2.76	-1.12	-4.40e-05	0.0	90.4	-11.29	0.12	0.13	-0.09	-1.00	3.36
19	81	2.57	1.30	5.87e-05	-1.01	0.0	-12.54	1.21	-0.16	0.10	1.30	1.96
		1.96	1.16	3.26e-04	0.0	90.4	-12.64	0.20	-0.16	0.10	1.16	2.57
19	82	3.47	-0.78	1.03e-04	-1.01	0.0	-10.71	1.09	0.10	-0.20	-0.87	2.88
		2.88	-0.87	-1.68e-04	0.0	90.4	-10.81	0.08	0.10	-0.20	-0.78	3.47
19	83	2.51	0.87	7.82e-05	-1.01	0.0	-12.93	1.25	-0.10	0.19	0.87	1.90
		1.90	0.78	4.22e-04	0.0	90.4	-13.03	0.24	-0.10	0.19	0.78	2.51
19	84	3.41	-1.16	1.23e-04	-1.01	0.0	-11.11	1.13	0.15	-0.11	-1.30	2.82
		2.82	-1.30	-7.21e-05	0.0	90.4	-11.21	0.12	0.15	-0.11	-1.16	3.41
19	106	3.49	-0.58	9.12e-05	-1.01	0.0	-10.28	1.08	0.05	-0.13	-0.62	2.84
		2.84	-0.62	-1.24e-04	0.0	90.4	-10.38	0.06	0.05	-0.13	-0.58	3.49

19	107	2.49	0.63	9.03e-05	-1.01	0.0	-13.36	1.26	-0.05	0.13	0.63	1.94
		1.94	0.58	3.78e-04	0.0	90.4	-13.46	0.25	-0.05	0.13	0.58	2.49
19	113	2.44	1.66	4.97e-05	-1.01	0.0	-12.84	1.23	-0.20	0.13	1.66	1.83
		1.83	1.48	3.82e-04	0.0	90.4	-12.94	0.21	-0.20	0.13	1.48	2.44
19	114	3.62	-0.99	1.07e-04	-1.01	0.0	-10.29	1.06	0.13	-0.25	-1.11	3.02
		3.02	-1.11	-2.51e-04	0.0	90.4	-10.39	0.05	0.13	-0.25	-0.99	3.62
19	115	2.36	1.11	7.48e-05	-1.01	0.0	-13.35	1.28	-0.13	0.24	1.11	1.76
		1.76	0.99	5.05e-04	0.0	90.4	-13.45	0.26	-0.13	0.24	0.99	2.36
19	116	3.54	-1.48	1.32e-04	-1.01	0.0	-10.80	1.11	0.20	-0.14	-1.66	2.95
		2.95	-1.66	-1.28e-04	0.0	90.4	-10.90	0.10	0.20	-0.14	-1.48	3.54
19	123	2.99	4.17e-04	9.08e-05	-1.01	0.0	-11.82	1.17	-1.83e-04	-4.22e-03	4.17e-04	2.39
		2.39	2.52e-04	1.20e-04	0.0	90.4	-11.92	0.16	-1.83e-04	-4.22e-03	2.52e-04	2.99
19	126	3.04	5.18e-04	9.31e-05	-1.01	0.0	-11.43	1.13	-2.27e-04	-5.24e-03	5.18e-04	2.48
		2.48	3.13e-04	1.38e-04	0.0	90.4	-11.53	0.12	-2.27e-04	-5.24e-03	3.13e-04	3.04
19	134	2.99	4.18e-04	9.08e-05	-1.01	0.0	-11.82	1.17	-1.83e-04	-4.23e-03	4.18e-04	2.39
		2.39	2.53e-04	1.25e-04	0.0	90.4	-11.92	0.16	-1.83e-04	-4.23e-03	2.53e-04	2.99
19	136	3.00	4.33e-04	9.11e-05	-1.01	0.0	-11.76	1.16	-1.89e-04	-4.38e-03	4.33e-04	2.40
		2.40	2.62e-04	1.38e-04	0.0	90.4	-11.86	0.15	-1.89e-04	-4.38e-03	2.62e-04	3.00
19	138	2.99	4.19e-04	9.07e-05	-1.01	0.0	-11.82	1.17	-1.83e-04	-4.24e-03	4.19e-04	2.39
		2.39	2.53e-04	1.38e-04	0.0	90.4	-11.92	0.16	-1.83e-04	-4.24e-03	2.53e-04	2.99
19	139	2.99	4.18e-04	9.07e-05	-1.01	0.0	-11.82	1.17	-1.83e-04	-4.23e-03	4.18e-04	2.39
		2.39	2.53e-04	1.27e-04	0.0	90.4	-11.92	0.16	-1.83e-04	-4.23e-03	2.53e-04	2.99
20	3	3.96	2.32e-04	-1.23e-04	-1.32	0.0	-14.94	-0.15	1.01e-04	2.34e-03	1.40e-04	3.96
		3.23	1.40e-04	-1.54e-04	0.0	90.4	-14.81	-1.46	1.01e-04	2.34e-03	2.32e-04	3.23
20	7	3.05	1.78e-04	-9.47e-05	-1.01	0.0	-11.49	-0.11	7.77e-05	1.80e-03	1.07e-04	3.05
		2.49	1.07e-04	-1.12e-04	0.0	90.4	-11.39	-1.13	7.77e-05	1.80e-03	1.78e-04	2.49
20	10	4.04	3.81e-04	-1.27e-04	-1.32	0.0	-14.35	-0.09	1.66e-04	3.85e-03	2.30e-04	4.04
		3.37	2.30e-04	-1.82e-04	0.0	90.4	-14.22	-1.41	1.66e-04	3.85e-03	3.81e-04	3.37
20	16	3.13	3.26e-04	-9.83e-05	-1.01	0.0	-10.90	-0.06	1.43e-04	3.30e-03	1.97e-04	3.13
		2.62	1.97e-04	-1.40e-04	0.0	90.4	-10.80	-1.07	1.43e-04	3.30e-03	3.26e-04	2.62
20	29	2.87	-0.33	-1.16e-04	-1.01	0.0	-12.72	-0.22	-0.05	-0.14	-0.33	2.87
		2.25	-0.38	-2.99e-04	0.0	90.4	-12.62	-1.24	-0.05	-0.14	-0.38	2.25
20	32	3.22	0.38	-7.67e-05	-1.01	0.0	-10.26	-3.73e-03	0.05	0.14	0.33	3.22
		2.72	0.33	4.16e-05	0.0	90.4	-10.16	-1.02	0.05	0.14	0.38	2.72
20	41	2.64	0.73	-8.20e-05	-1.01	0.0	-12.44	-0.20	0.08	-0.16	0.65	2.64
		2.03	0.65	-3.78e-04	0.0	90.4	-12.34	-1.21	0.08	-0.16	0.73	2.03
20	42	3.41	-0.95	-1.21e-04	-1.01	0.0	-11.12	-0.09	-0.12	0.09	-0.95	3.41
		2.85	-1.06	6.24e-05	0.0	90.4	-11.02	-1.10	-0.12	0.09	-1.06	2.85
20	43	2.69	1.06	-6.93e-05	-1.01	0.0	-11.86	-0.14	0.12	-0.09	0.95	2.69
		2.13	0.95	-2.99e-04	0.0	90.4	-11.76	-1.15	0.12	-0.09	1.06	2.13
20	44	3.46	-0.65	-1.07e-04	-1.01	0.0	-10.54	-0.03	-0.08	0.17	-0.65	3.46
		2.94	-0.73	1.21e-04	0.0	90.4	-10.44	-1.04	-0.08	0.17	-0.73	2.94
20	61	2.85	-0.38	-1.20e-04	-1.01	0.0	-12.91	-0.24	-0.06	-0.16	-0.38	2.85
		2.22	-0.43	-3.26e-04	0.0	90.4	-12.81	-1.25	-0.06	-0.16	-0.43	2.22
20	64	3.25	0.43	-7.40e-05	-1.01	0.0	-10.07	0.01	0.06	0.16	0.38	3.25
		2.76	0.38	6.86e-05	0.0	90.4	-9.97	-1.00	0.06	0.16	0.43	2.76
20	73	2.57	0.85	-8.00e-05	-1.01	0.0	-12.58	-0.21	0.10	-0.19	0.76	2.57
		1.96	0.76	-4.19e-04	0.0	90.4	-12.48	-1.22	0.10	-0.19	0.85	1.96
20	74	3.46	-1.10	-1.26e-04	-1.01	0.0	-11.07	-0.08	-0.14	0.11	-1.10	3.46
		2.90	-1.23	8.66e-05	0.0	90.4	-10.97	-1.10	-0.14	0.11	-1.23	2.90
20	75	2.63	1.23	-6.53e-05	-1.01	0.0	-11.91	-0.14	0.14	-0.10	1.10	2.63
		2.07	1.10	-3.27e-04	0.0	90.4	-11.81	-1.16	0.14	-0.10	1.23	2.07
20	76	3.52	-0.76	-1.09e-04	-1.01	0.0	-10.40	-0.02	-0.10	0.19	-0.76	3.52
		3.01	-0.85	1.62e-04	0.0	90.4	-10.30	-1.03	-0.10	0.19	-0.85	3.01
20	93	2.78	-0.48	-1.27e-04	-1.01	0.0	-13.34	-0.28	-0.08	-0.21	-0.48	2.78
		2.14	-0.55	-3.82e-04	0.0	90.4	-13.24	-1.29	-0.08	-0.21	-0.55	2.14
20	96	3.31	0.55	-6.91e-05	-1.01	0.0	-9.64	0.05	0.08	0.21	0.48	3.31
		2.84	0.48	1.25e-04	0.0	90.4	-9.54	-0.96	0.08	0.21	0.55	2.84
20	105	2.42	1.08	-7.59e-05	-1.01	0.0	-13.02	-0.24	0.12	-0.24	0.97	2.42
		1.80	0.97	-5.01e-04	0.0	90.4	-12.91	-1.26	0.12	-0.24	1.08	1.80
20	106	3.59	-1.41	-1.34e-04	-1.01	0.0	-10.83	-0.07	-0.19	0.14	-1.41	3.59
		3.03	-1.57	1.38e-04	0.0	90.4	-10.73	-1.08	-0.19	0.14	-1.57	3.03
20	107	2.50	1.57	-5.74e-05	-1.01	0.0	-12.15	-0.16	0.19	-0.13	1.41	2.50
		1.94	1.41	-3.83e-04	0.0	90.4	-12.05	-1.17	0.19	-0.13	1.57	1.94
20	108	3.67	-0.97	-1.14e-04	-1.01	0.0	-9.97	0.02	-0.12	0.25	-0.97	3.67
		3.17	-1.08	2.44e-04	0.0	90.4	-9.87	-1.00	-0.12	0.25	-1.08	3.17
20	123	3.05	1.78e-04	-9.47e-05	-1.01	0.0	-11.49	-0.11	7.81e-05	1.80e-03	1.08e-04	3.05
		2.49	1.08e-04	-1.21e-04	0.0	90.4	-11.39	-1.13	7.81e-05	1.80e-03	1.78e-04	2.49
20	126	3.10	2.78e-04	-9.71e-05	-1.01	0.0	-11.10	-0.08	1.21e-04	2.81e-03	1.68e-04	3.10
		2.58	1.68e-04	-1.40e-04	0.0	90.4	-11.00	-1.09	1.21e-04	2.81e-03	2.78e-04	2.58
20	134	3.05	1.79e-04	-9.47e-05	-1.01	0.0	-11.49	-0.11	7.83e-05	1.81e-03	1.08e-04	3.05
		2.49	1.08e-04	-1.27e-04	0.0	90.4	-11.39	-1.13	7.83e-05	1.81e-03	1.79e-04	2.49
20	136	3.06	1.94e-04	-9.50e-05	-1.01	0.0	-11.43	-0.11	8.49e-05	1.96e-03	1.17e-04	3.06
		2.50	1.17e-04	-1.40e-04	0.0	90.4	-11.33	-1.12	8.49e-05	1.96e-03	1.94e-04	2.50
20	138	3.05	1.80e-04	-9.47e-05	-1.01	0.0	-11.49	-0.11	7.88e-05	1.82e-03	1.09e-04	3.05
		2.49	1.09e-04	-1.40e-04	0.0	90.4	-11.39	-1.13	7.88e-05	1.82e-03	1.80e-04	2.49
20	139	3.05	1.79e-04	-9.47e-05	-1.01	0.0	-11.49	-0.11	7.84e-05	1.81e-03	1.08e-04	3.05
		2.49	1.08e-04	-1.29e-04	0.0	90.4	-11.39	-1.13	7.84e-05	1.81e-03	1.79e-04	2.49

21	3	3.96	-1.40e-04	1.50e-04	-1.32	0.0	-14.81	1.46	1.01e-04	2.34e-03	-2.32e-04	3.23
		3.23	-2.32e-04	1.40e-04	0.0	90.4	-14.94	0.15	1.01e-04	2.34e-03	-1.40e-04	3.96
21	7	3.05	-1.07e-04	1.15e-04	-1.01	0.0	-11.39	1.13	7.77e-05	1.80e-03	-1.78e-04	2.49
		2.49	-1.78e-04	1.01e-04	0.0	90.4	-11.49	0.11	7.77e-05	1.80e-03	-1.07e-04	3.05
21	10	4.04	-2.30e-04	1.56e-04	-1.32	0.0	-14.22	1.41	1.66e-04	3.85e-03	-3.81e-04	3.37
		3.37	-3.81e-04	1.67e-04	0.0	90.4	-14.35	0.09	1.66e-04	3.85e-03	-2.30e-04	4.04
21	16	3.13	-1.97e-04	1.21e-04	-1.01	0.0	-10.80	1.07	1.43e-04	3.30e-03	-3.26e-04	2.62
		2.62	-3.26e-04	1.29e-04	0.0	90.4	-10.90	0.06	1.43e-04	3.30e-03	-1.97e-04	3.13
21	29	2.86	0.74	8.05e-05	-1.01	0.0	-12.69	1.22	-0.08	-0.03	0.74	2.25
		2.25	0.67	2.07e-04	0.0	90.4	-12.79	0.21	-0.08	-0.03	0.67	2.86
21	32	3.24	-0.67	1.50e-04	-1.01	0.0	-10.09	1.03	0.08	0.04	-0.74	2.72
		2.72	-0.74	4.33e-05	0.0	90.4	-10.19	0.02	0.08	0.04	-0.67	3.24
21	41	2.63	1.07	9.67e-05	-1.01	0.0	-12.36	1.21	-0.12	0.04	1.07	2.03
		2.03	0.97	3.13e-04	0.0	90.4	-12.46	0.19	-0.12	0.04	0.97	2.63
21	44	3.46	-0.97	1.34e-04	-1.01	0.0	-10.42	1.05	0.12	-0.03	-1.07	2.94
		2.94	-1.07	-7.72e-05	0.0	90.4	-10.52	0.03	0.12	-0.03	-0.97	3.46
21	61	2.83	0.85	7.48e-05	-1.01	0.0	-12.90	1.24	-0.09	-0.04	0.85	2.22
		2.22	0.77	2.21e-04	0.0	90.4	-13.00	0.23	-0.09	-0.04	0.77	2.83
21	64	3.26	-0.77	1.56e-04	-1.01	0.0	-9.88	1.01	0.09	0.04	-0.85	2.76
		2.76	-0.85	3.93e-05	0.0	90.4	-9.98	1.83e-03	0.09	0.04	-0.77	3.26
21	73	2.57	1.24	9.36e-05	-1.01	0.0	-12.51	1.22	-0.13	0.04	1.24	1.96
		1.96	1.12	3.45e-04	0.0	90.4	-12.61	0.21	-0.13	0.04	1.12	2.57
21	76	3.53	-1.12	1.37e-04	-1.01	0.0	-10.27	1.03	0.13	-0.04	-1.24	3.01
		3.01	-1.24	-1.09e-04	0.0	90.4	-10.37	0.02	0.13	-0.04	-1.12	3.53
21	93	2.77	1.10	6.34e-05	-1.01	0.0	-13.35	1.27	-0.12	-0.05	1.10	2.14
		2.14	0.99	2.50e-04	0.0	90.4	-13.45	0.26	-0.12	-0.05	0.99	2.77
21	96	3.33	-0.99	1.67e-04	-1.01	0.0	-9.43	0.98	0.12	0.05	-1.10	2.84
		2.84	-1.10	3.36e-05	0.0	90.4	-9.53	-0.03	0.12	0.05	-0.99	3.33
21	105	2.41	1.59	8.74e-05	-1.01	0.0	-12.95	1.25	-0.17	0.05	1.59	1.80
		1.80	1.44	4.09e-04	0.0	90.4	-13.05	0.24	-0.17	0.05	1.44	2.41
21	108	3.68	-1.44	1.43e-04	-1.01	0.0	-9.83	1.00	0.17	-0.05	-1.59	3.17
		3.17	-1.59	-1.73e-04	0.0	90.4	-9.93	-9.19e-03	0.17	-0.05	-1.44	3.68
21	123	3.05	-1.08e-04	1.15e-04	-1.01	0.0	-11.39	1.13	7.81e-05	1.80e-03	-1.78e-04	2.49
		2.49	-1.78e-04	1.11e-04	0.0	90.4	-11.49	0.11	7.81e-05	1.80e-03	-1.08e-04	3.05
21	126	3.10	-1.68e-04	1.19e-04	-1.01	0.0	-11.00	1.09	1.21e-04	2.81e-03	-2.78e-04	2.58
		2.58	-2.78e-04	1.29e-04	0.0	90.4	-11.10	0.08	1.21e-04	2.81e-03	-1.68e-04	3.10
21	134	3.05	-1.08e-04	1.15e-04	-1.01	0.0	-11.39	1.13	7.83e-05	1.81e-03	-1.79e-04	2.49
		2.49	-1.79e-04	1.16e-04	0.0	90.4	-11.49	0.11	7.83e-05	1.81e-03	-1.08e-04	3.05
21	136	3.06	-1.17e-04	1.16e-04	-1.01	0.0	-11.33	1.12	8.49e-05	1.96e-03	-1.94e-04	2.50
		2.50	-1.94e-04	1.29e-04	0.0	90.4	-11.43	0.11	8.49e-05	1.96e-03	-1.17e-04	3.06
21	138	3.05	-1.09e-04	1.15e-04	-1.01	0.0	-11.39	1.13	7.88e-05	1.82e-03	-1.80e-04	2.49
		2.49	-1.80e-04	1.29e-04	0.0	90.4	-11.49	0.11	7.88e-05	1.82e-03	-1.09e-04	3.05
21	139	3.05	-1.08e-04	1.15e-04	-1.01	0.0	-11.39	1.13	7.84e-05	1.81e-03	-1.79e-04	2.49
		2.49	-1.79e-04	1.18e-04	0.0	90.4	-11.49	0.11	7.84e-05	1.81e-03	-1.08e-04	3.05

Trave	**M3 mx/mn**	**M2 mx/mn**	**D 2 / D 3**	**Q 2 / Q 3**	**N**	**V 2**	**V 3**	**T**
	-6.81	-2.19	-1.47e-03	-6.03	-25.55	-5.97	-1.33	-0.25
	4.08	2.19	1.64e-03	0.0	-9.02	7.95	1.33	0.25

VERIFICHE ELEMENTI TRAVE E/O PILASTRO IN C.A.

In tabella vengono riportati per ogni elemento il numero identificativo ed il codice di verifica con le sigle **Ok** o **NV**.

Nel caso in cui si sia proceduto alla progettazione con il metodo degli stati limite (**S.L.**) vengono riportati: il rapporto x/d, le verifiche per sollecitazioni proporzionali e la verifica per compressione media con l'indicazione delle combinazioni in cui si sono attinti i rispettivi valori.

Nel caso in cui la struttura abbia comportamento dissipativo e sia prevista la progettazione con il criterio della gerarchia delle resistenze **(G.R.)** vengono riportate le verifiche di sovraresistenza e del nodo.

Per gli elementi tipo pilastro sono riportati numero e diametro dei ferri di vertice, numero e diametro di ferri disposti lungo i lati L1 (paralleli alla base della sezione) e lungo i lati L2 (paralleli all'altezza della sezione).

Per gli elementi tipo trave sono riportati infine le quantità di armatura inferiore e superiore.

Schema della distribuzione delle armature longitudinali

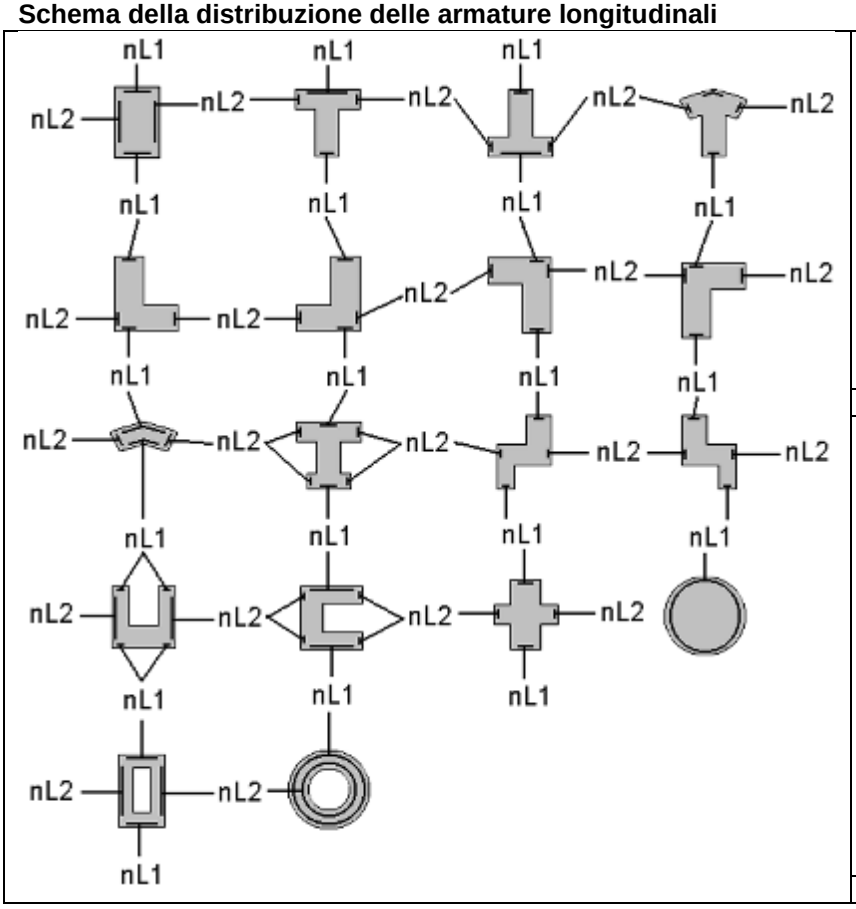

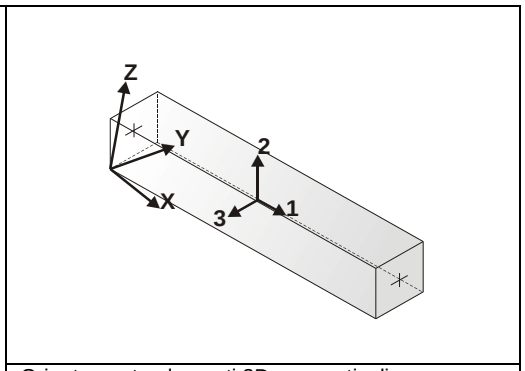

Orientamento elementi 2D non verticali

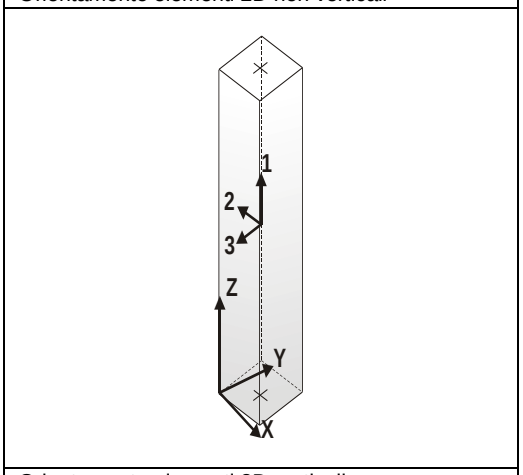

Orientamento elementi 2D verticali

PROGETTAZIONE DELLE FONDAZIONI

Il D.M.17/01/2018 - par: 7.2.5 prevede:

"Sia per CD"A" sia per CD"B" il dimensionamento delle strutture di fondazione e la verifica di sicurezza del complesso fondazione-terreno devono essere eseguiti assumendo come azione in fondazione, trasmessa dagli elementi soprastanti, una tra le seguenti:

- quella derivante dall'analisi strutturale eseguita ipotizzando comportamento strutturale non dissipativo;
- […];
- quella trasferita dagli elementi soprastanti nell'ipotesi di comportamento strutturale dissipativo, amplificata di un coefficiente pari a 1,30 in CD"A" e 1,10 in CD"B";

Nel contesto visualizzazione risultati e nella stampa della relazione sulle fondazioni PRO_SAP mostra le sollecitazioni che derivano dall'analisi non incrementate sia in termini di pressioni sul terreno che in termini di sollecitazioni.

La progettazione degli elementi strutturali con proprietà fondazione è effettuata da PRO_SAP (per travi e platee) o da PRO_CAD Plinti (per plinti e pali di fondazione) incrementando le sollecitazioni delle combinazioni con sisma di un coefficiente pari 1.1 in CDB e 1.3 in CDA per pali, plinti, travi e platee.
Per i bicchieri dei plinti di fondazione prefabbricati l'incremento delle sollecitazioni ha un fattore pari a 1.2 in CDB e 1.35 in CDA.
N.B.: nel caso di comportamento strutturale non dissipativo la progettazione viene effettuata senza nessun incremento.

Le verifiche geotecniche vengono effettuate dal modulo geotecnico incrementando automaticamente le sollecitazioni del fattore 1.1 in CDB e 1.3 in CDA per pali, plinti, travi e platee.
N.B.: nel caso di comportamento strutturale non dissipativo le verifiche geotecniche vengono effettuate senza nessun incremento.

Simbologia adottata nelle tabelle di verifica

Per le verifiche alle T.A. di pilastri e travi è presente una tabella con i simboli di seguito descritti:

M_P X Y	Numero della pilastrata (P) e posizione in pianta (X,Y)
M_T Z P P	Numero della travata, quota media pilastrata iniziale e finale (nodo in assenza di pilastrata)
Pilas. o Trave	numero identificativo dell'elemento D2
Note	Viene riportato il codice relativo alla sezione(s) e relativo al materiale(m); nella terza riga viene riportato il valore delle snellezze in direzione 2-2 e 3-3
Stato	Codici di verifica relativi alle tensioni normali e alle tensioni tangenziali
Quota	Ascissa del punto di verifica
%Af	Percentuale di area di armatura rispetto a quella di calcestruzzo
Armat. long.	Numero e diametro dei ferri di armatura longitudinale: ferri di vertice + ferri di lato (come da fig. precedente)
Af inf.	Area di armatura longitudinale posta all'intradosso della trave
Af sup	Area di armatura longitudinale posta all'estradosso della trave
Sc max	Massima tensione di compressione del calcestruzzo
Sc med	Massima tensione media di compressione del calcestruzzo
Sf max	Tensione massima nell'acciaio
staffe	Vengono riportati i dati del tratto di staffatura in cui cade la sezione di verifica; in particolare: numero dei bracci, diametro, passo, lunghezza tratto
Tau max	Tensione massima tangenziale nel cls
Rif. comb	Combinazioni in cui si generano i seguenti valori di tensione: Sc max, Sc med, Sf max, Tau max
AfV	area dell'armatura atta ad assorbire le azioni di taglio
AfT	area dell'armatura atta ad assorbire le azioni di torsione
Scorr. P	Scorrimento dei piegati
Af long.	Area del ferro longitudinale aggiuntivo per assorbire la torsione

Per le verifiche agli S.L. dei pilastri è presente una tabella con i simboli di seguito descritti:

M_P X Y	Numero della pilastrata (P) e posizione in pianta (X,Y)
Pilas.	numero identificativo dell'elemento D2
Note	Codici identificativi delle sezione (s) e materiale (m) pilastro
Stato	Codici relativi all'esito delle verifiche effettuate appresso descritte
Quota	Quota sezione di verifica
%Af	Percentuale di area di armatura rispetto a quella di calcestruzzo
r. snell.	Rapporto di snellezza λ su λ^*: valore superiore a 1 per elementi snelli nel caso in cui viene effettuata la verifica con il metodo diretto dello stato di equilibrio
Armat. long.	Numero e diametro (d) dei ferri di armatura longitudinale distinti in ferri di vertice + ferri di lato nelle posizioni nL1 e nL2, come da schemi in figura precedente
V N/M	Verifica a pressoflessione con rapporto Ed/Rd: valore minore o uguale a 1 per verifica positiva
V N sis	Verifica a compressione solo calcestruzzo con rapporto Nsd/Nrd ed Nrd calcolato come al punto 7.4.4.2.1: valore minore o uguale a 1 per verifica positiva
Staffe	Dati tratto di staffatura oggetto di verifica, nello specifico: numero delle braccia, diametro, passo, lunghezza L tratto
V V/T cls	Verifica a taglio/torsione con rapporto Ved/Vrd: valore minore o uguale a 1 per verifica positiva
Rif. cmb.	Riferimento combinazioni da cui si generano le verifiche più gravose per il pilastro

Per le verifiche alla G.R. dei pilastri è presente una tabella con i simboli di seguito descritti:

Pilas.	numero identificativo dell'elemento D2 pilastro
sovr. Xi (Xf)	Verifica sovraresistenza come da formula 7.4.4 in direzione X, alla base (i) ed alla sommità (f): rapporto tra i momenti

	resistenti dei pilastri e delle travi. La verifica è positiva se maggiore del γ_{Rd} adottato
sovr. Yi (Yf)	Verifica sovraresistenza come da formula 7.4.4 in direzione Y, alla base (i) ed alla sommità (f): rapporto tra i momenti resistenti dei pilastri e delle travi. La verifica è positiva se maggiore del γ_{Rd} adottato
M 2-2 i (f)	Valore del momento resistente 2-2 alla base (i) ed alla sommità (f) con massimo momento in presenza dello sforzo normale di calcolo
M 3-3 i (f)	Valore del momento resistente 3-3 alla base (i) ed alla sommità (f) con massimo momento in presenza dello sforzo normale di calcolo
Luce per V	Luce di calcolo per la definizione del taglio (generato dai momenti resistenti)
V M2-2 (M3-3)	Valore del taglio generato dai momenti resistenti 2-2 (3-3)

Per le verifiche dei dettagli costruttivi per la duttilità è presente una tabella con i simboli di seguito descritti:
(Non presente nel caso di comportamento strutturale non dissipativo)

Pilas	Numero identificativo D2 pilastro
ni	Sforzo assiale adimensionalizzato di progetto relativo alla combinazione sismica SLV
alfaomega	Prodotto tra il coefficiente di efficacia del confinamento e il rapporto meccanico dell'armatura trasversale di confinamento all'interno del nodo
V.7.4.29 2-2 (3-3)	Rapporto tra la domanda di staffe minima nel nodo e il rapporto meccanico dell'armatura trasversale di confinamento inserito all'interno del nodo in direzione 2 (3)
V. 7.4.29 Stato	Codici relativi all'esito della verifica 7.4.29
dmu_fi 2-2 (3-3)	Domanda in duttilità di curvatura in direzione 2 (3)
cmu_fi 2-2 (3-3)	Capacità in duttilità di curvatura in direzione 2 (3)
V. dutt. 2-2 (3-3)	Rapporto tra la domanda in duttilità di curvatura e la capacità in duttilità di curvatura in direzione 2 (3)

Per le verifiche nodi trave-pilastro è presente una tabella con i simboli di seguito descritti:

Nodo	Numero identificativo del nodo trave-pilastro
Stato	Esito delle verifiche
Pilastro	Numero identificativo D2 pilastro
Diam st	Diametro staffe nodo
Passo	Passo staffe nodo
n. br. 2 (3)	Numero braccia staffe per il taglio in direzione 2 (3)
Bj2 (3)	Larghezza effettiva del nodo per il taglio in direzione 2 (3)
Hjc2 (3)	Distanza tra le giaciture più esterne delle armature del pilastro per il taglio in direzione 2 (3)
V. 7.4.8	Rapporto tra il taglio Vjbd e il taglio resistente come da formula 7.4.8
V. Ash	Rapporto tra il passo staffe calcolato secondo il capitolo 7.4.4.3.1. e il passo staffe effattivamente inserita nel nodo. Nel caso di valore indica passo staffe utilizzato deriva dalle formule presenti nel paragrafo 7.4.4.3.1. Nel caso di valore minore di 1 il passo staffe utilizzato deriva del pilastro superiore o inferiore al nodo
7.4.10	Check passo staffe valutato in funzione della formula 7.4.10: • SI il passo staffe è calcolato utilizzando la formula 7.4.10; • NO il passo staffe è calcolato utilizzando le formule 7.4.11 e/o 7.4.12; • NR calcolo passo staffe non richiesto;
Rif. comb.	Riferimento combinazioni da cui si generano le verifiche più gravose per il nodo

Per le verifiche agli S.L. delle travi è presente una tabella con i simboli di seguito descritti:

M_T Z P P	Numero della travata (T), quota media (Z), n° pilastrata iniziale (P) e finale (P) (nodo in assenza di pilastrata)
Trave	numero identificativo dell'elemento D2
Note	Codici identificativi sezione (s) e materiale (m) trave; sono inoltre presenti le sigle relative all'esito delle verifiche effettuate appresso descritte
%Af	Percentuale di area di armatura rispetto a quella di calcestruzzo
Af inf.	Area di armatura longitudinale posta all'intradosso
Af sup	Area di armatura longitudinale posta all'estradosso
Af long.	Area complessiva armatura longitudinale
x/d	rapporto tra posizione dell'asse neutro e altezza utile
V N/M	Verifica a pressoflessione rapporto Ed/Rd: valore minore o uguale a 1 per verifica positiva
Staffe	Dati tratto di staffatura oggetto di verifica, nello specifico: numero delle braccia, diametro, passo, lunghezza L tratto
V V/T cls	Verifica a taglio/torsione con rapporto Ved/Vrd: valore minore o uguale a 1 per verifica positiva
Rif. cmb.	Riferimento combinazioni da cui si generano le verifiche più gravose per la trave

Per le verifiche alla G.R. delle travi è presente una tabella con i simboli di seguito descritti:

Trave	numero identificativo dell'elemento D2 trave
M negativo i (f)	Valore del momento resistente negativo all' estremità iniziale i (finale f) della trave
M positivo i (f)	Valore del momento resistente positivo all' estremità iniziale i (finale f) della trave
Luce per V	Luce di calcolo per la definizione del taglio (generato dai momenti resistenti)
V M-i M+f	Taglio generato dai momenti resistenti negativo i e positivo f
V M+i M-f	Taglio generato dai momenti resistenti positivo i e negativo f
VEd, min	Valore di taglio minimo per verifica condizioni p.to 7.4.4.1.1 armatura diagonale (solo per CD "A")
VEd, max	Valore di taglio massimo per verifica condizioni p.to 7.4.4.1.1 armatura diagonale (solo per CD "A")
Vr1	Valore di taglio come da formula 7.4.1 per armatura diagonale (solo per CD "A")
As	Area singolo ordine armature diagonali come da formula 7.4.2 (solo per CD "A")

Con riferimento al **Documento di Affidabilità** "*Test di validazione del software di calcolo PRO_SAP e dei moduli aggiuntivi PRO_SAP Modulo Geotecnico, PRO_CAD nodi acciaio e PRO_MST*" - versione Maggio 2011, disponibile per il download sul sito **www.2si.it**, si segnalano i seguenti esempi applicativi:

					M_P= 1	**X=50.0**	**Y=55.0**					
Pilas.	Note	Stato	Quota cm	%Af	r. snell.	Armat. long.	V N/M	V N sis	Staffe L=cm	V V/T cls	V V/T acc	Rif. cmb
1	s=1,m=1	ok,ok	0.0	1.37	0.27	4d14 2+2 d14	0.24	0.05	3+3d8/15 L=45	0.08	0.04	115,120,95,92
			159.5	1.37	0.27	4d14 2+2 d14	0.07	0.05	3+3d8/15 L=229	0.08	0.04	114,120,95,92
	[b=1.0;1.0]		319.0	1.37	0.27	4d14 2+2 d14	0.16	0.04	3+3d8/15 L=45	0.08	0.04	108,120,95,92
22	s=1,m=1	ok,ok	319.0	1.37	0.03	4d14 2+2 d14	0.23	0.03	3+3d8/15 L=45	0.10	0.07	95,120,95,95
	[b=1.0;1.0]		364.0	1.37	0.03	4d14 2+2 d14	0.17	0.03	3+3d8/15 L=45	0.10	0.07	108,120,95,95
					M_P= 2	**X=505.0**	**Y=55.0**					
Pilas.	Note	Stato	Quota	%Af	r. snell.	Armat. long.	V N/M	V N sis	Staffe	V V/T cls	V V/T acc	Rif. cmb
2	s=1,m=1	ok,ok	0.0	1.37	0.37	4d14 2+2 d14	0.22	0.10	3+3d8/15 L=45	0.08	0.05	92,120,92,92
			159.5	1.37	0.37	4d14 2+2 d14	0.07	0.09	3+3d8/15 L=229	0.08	0.05	94,120,92,92
	[b=1.0;1.0]		319.0	1.37	0.37	4d14 2+2 d14	0.14	0.09	3+3d8/15 L=45	0.08	0.05	108,120,92,92
23	s=1,m=1	ok,ok	319.0	1.37	0.04	4d14 2+2 d14	0.20	0.07	3+3d8/15 L=45	0.19	0.10	114,120,115,115
	[b=1.0;1.0]		364.0	1.37	0.04	4d14 2+2 d14	0.22	0.07	3+3d8/15 L=45	0.19	0.10	114,120,115,115
					M_P= 3	**X=1050.0**	**Y=55.0**					
Pilas.	Note	Stato	Quota	%Af	r. snell.	Armat. long.	V N/M	V N sis	Staffe	V V/T cls	V V/T acc	Rif. cmb
3	s=1,m=1	ok,ok	0.0	1.37	0.37	4d14 2+2 d14	0.23	0.09	3+3d8/15 L=45	0.08	0.05	92,114,92,92
			159.5	1.37	0.37	4d14 2+2 d14	0.06	0.09	3+3d8/15 L=229	0.08	0.05	94,114,92,92
	[b=1.0;1.0]		319.0	1.37	0.37	4d14 2+2 d14	0.13	0.09	3+3d8/15 L=45	0.08	0.05	92,114,92,92
24	s=1,m=1	ok,ok	319.0	1.37	0.04	4d14 2+2 d14	0.20	0.07	3+3d8/15 L=45	0.08	0.05	108,114,92,96
	[b=1.0;1.0]		364.0	1.37	0.04	4d14 2+2 d14	0.20	0.07	3+3d8/15 L=45	0.08	0.05	114,114,92,96
					M_P= 4	**X=1595.0**	**Y=55.0**					
Pilas.	Note	Stato	Quota	%Af	r. snell.	Armat. long.	V N/M	V N sis	Staffe	V V/T cls	V V/T acc	Rif. cmb
4	s=1,m=1	ok,ok	0.0	1.37	0.37	4d14 2+2 d14	0.22	0.09	3+3d8/15 L=45	0.08	0.04	94,106,94,94
			159.5	1.37	0.37	4d14 2+2 d14	0.06	0.09	3+3d8/15 L=229	0.08	0.04	92,106,94,94
	[b=1.0;1.0]		319.0	1.37	0.37	4d14 2+2 d14	0.13	0.09	3+3d8/15 L=45	0.08	0.04	114,106,94,94
25	s=1,m=1	ok,ok	319.0	1.37	0.04	4d14 2+2 d14	0.20	0.07	3+3d8/15 L=45	0.10	0.06	114,110,92,92
	[b=1.0;1.0]		364.0	1.37	0.04	4d14 2+2 d14	0.19	0.07	3+3d8/15 L=45	0.10	0.06	108,110,92,92
					M_P= 5	**X=2050.0**	**Y=55.0**					
Pilas.	Note	Stato	Quota	%Af	r. snell.	Armat. long.	V N/M	V N sis	Staffe	V V/T cls	V V/T acc	Rif. cmb
5	s=1,m=1	ok,ok	0.0	1.37	0.27	4d14 2+2 d14	0.24	0.05	3+3d8/15 L=45	0.08	0.04	105,110,89,94
			159.5	1.37	0.27	4d14 2+2 d14	0.07	0.05	3+3d8/15 L=229	0.08	0.04	108,110,89,94
	[b=1.0;1.0]		319.0	1.37	0.27	4d14 2+2 d14	0.16	0.04	3+3d8/15 L=45	0.08	0.04	89,110,89,94
26	s=1,m=1	ok,ok	319.0	1.37	0.03	4d14 2+2 d14	0.23	0.03	3+3d8/15 L=45	0.10	0.06	89,110,89,97
	[b=1.0;1.0]		364.0	1.37	0.03	4d14 2+2 d14	0.17	0.03	3+3d8/15 L=45	0.10	0.06	114,110,89,97

Pilas.	**%Af**	**r. snell.**	**V N/M**	**V N sis**	**V V/T cls**	**V V/T acc**
	1.37	0.37	0.24	0.10	0.19	0.10

Nodo	**Stato**	**Pilas.**	**Diam st** mm	**Passo** cm	**n. br. 2**	**Bj2** cm	**Hjc2** cm	**n. br. 3**	**Bj3** cm	**Hjc3** cm	**V. 7.4.8**	**V. Ash**	**7.4.10**	**Rif. cmb**
2427	ok	1	8	15.0	3	30.0	23.0	3	30.0	23.0	0.4	0.6	NO	94,101
2428	ok	2	8	12.5	3	30.0	23.0	3	30.0	23.0	0.6	1.0	NO	98,101
2429	ok	3	8	12.5	3	30.0	23.0	3	30.0	23.0	0.6	1.0	NO	90,95

2430	ok	4	8	12.5	3	30.0	23.0	3	30.0	23.0	0.6	1.0	NO	94,99
2431	ok	5	8	15.0	3	30.0	23.0	3	30.0	23.0	0.4	0.6	NO	100,99

Nodo	**Passo**	**V. 7.4.8**	**V. Ash**
	12.50		
		0.64	0.98

							M_T= 1	**Z=330.9**	**P=1**	**P=5**		
Trave	Note	Pos. cm	%Af	Af inf.	Af. sup	Af long.	x/d	V N/M	V V/T cls	V V/T acc	Staffe L=cm	Rif. cmb
10	ok,ok	0.0	0.34	4.5	4.5	0.0	0.06	8.18e-03	0.03	0.01	2d8/15 L=123	91,116,10
	s=2,m=1	138.2	0.34	4.5	4.5	0.0	0.06	0.03	0.02	1.65e-03	2d8/15 L=123	10,113,115
18	ok,ok	0.0	0.50	2.3	2.3	0.0	0.15	0.17	0.04	1.97e-03	2d8/15 L=50	10,0,0
	s=3,m=1	90.4	0.50	2.3	2.3	0.0	0.15	0.14	0.05	0.01	2d8/20 L=40	10,0,3
19	ok,ok	0.0	0.50	2.3	2.3	0.0	0.15	0.14	0.08	0.01	2d8/20 L=40	10,0,3
	s=3,m=1	90.4	0.50	2.3	2.3	0.0	0.15	0.17	0.06	2.05e-03	2d8/15 L=50	10,0,0
11	ok,ok	0.0	0.34	4.5	4.5	0.0	0.06	0.03	0.02	1.64e-03	2d8/15 L=123	10,115,115
	s=2,m=1	138.2	0.34	4.5	4.5	0.0	0.06	7.93e-03	0.04	0.01	2d8/15 L=123	107,114,10
6	ok,ok	0.0	0.34	4.5	4.5	0.0	0.06	0.04	0.03	0.01	2d8/15 L=123	10,108,10
	s=2,m=1	138.0	0.34	4.5	4.5	0.0	0.06	7.43e-03	0.02	4.76e-03	2d8/15 L=123	114,108,108
14	ok,ok	0.0	0.50	2.3	2.3	0.0	0.15	0.02	0.05	0.01	2d8/15 L=50	94,0,10
	s=3,m=1	135.5	0.50	2.3	2.3	0.0	0.15	0.05	0.04	4.41e-03	2d8/20 L=85	10,0,0
15	ok,ok	0.0	0.50	2.3	2.3	0.0	0.15	0.05	0.06	0.02	2d8/20 L=85	10,0,3
	s=3,m=1	135.5	0.50	2.3	2.3	0.0	0.15	0.14	0.04	5.01e-03	2d8/15 L=50	10,0,0
7	ok,ok	0.0	0.34	4.5	4.5	0.0	0.06	0.02	0.02	1.88e-03	2d8/15 L=123	10,114,105
	s=2,m=1	138.0	0.34	4.5	4.5	0.0	0.06	9.33e-03	0.03	9.41e-03	2d8/15 L=123	94,115,10
8	ok,ok	0.0	0.34	4.5	4.5	0.0	0.06	0.01	0.04	0.01	2d8/15 L=123	113,108,10
	s=2,m=1	138.0	0.34	4.5	4.5	0.0	0.06	0.03	0.02	1.22e-03	2d8/15 L=123	10,105,105
16	ok,ok	0.0	0.50	2.3	2.3	0.0	0.15	0.17	0.07	1.89e-03	2d8/15 L=50	10,0,0
	s=3,m=1	135.5	0.50	2.3	2.3	0.0	0.15	0.11	0.08	0.02	2d8/20 L=85	10,0,3
17	ok,ok	0.0	0.50	2.3	2.3	0.0	0.15	0.11	0.07	0.02	2d8/20 L=85	10,0,3
	s=3,m=1	135.5	0.50	2.3	2.3	0.0	0.15	0.17	0.05	1.77e-03	2d8/15 L=50	10,0,0
9	ok,ok	0.0	0.34	4.5	4.5	0.0	0.06	0.03	0.02	1.25e-03	2d8/15 L=123	10,107,105
	s=2,m=1	138.0	0.34	4.5	4.5	0.0	0.06	0.01	0.03	0.01	2d8/15 L=123	113,106,10
12	ok,ok	0.0	0.34	4.5	4.5	0.0	0.06	7.93e-03	0.04	0.01	2d8/15 L=123	113,108,10
	s=2,m=1	138.2	0.34	4.5	4.5	0.0	0.06	0.03	0.02	1.55e-03	2d8/15 L=123	10,105,105
20	ok,ok	0.0	0.50	2.3	2.3	0.0	0.15	0.17	0.06	2.35e-03	2d8/15 L=50	10,0,0
	s=3,m=1	90.4	0.50	2.3	2.3	0.0	0.15	0.14	0.08	0.01	2d8/20 L=40	10,0,3
21	ok,ok	0.0	0.50	2.3	2.3	0.0	0.15	0.14	0.04	0.01	2d8/20 L=40	10,0,3
	s=3,m=1	90.4	0.50	2.3	2.3	0.0	0.15	0.17	0.03	2.17e-03	2d8/15 L=50	10,0,0
13	ok,ok	0.0	0.34	4.5	4.5	0.0	0.06	0.03	0.01	1.57e-03	2d8/15 L=123	10,107,105
	s=2,m=1	138.2	0.34	4.5	4.5	0.0	0.06	8.39e-03	0.03	0.01	2d8/15 L=123	93,106,10

Trave	**%Af**	**Af inf.**	**Af. sup**	**Af long.**	**x/d**	**V N/M**	**V V/T cls**	**V V/T acc**
	0.50	4.52	4.52	0.0	0.15	0.17	0.08	0.02

VERIFICHE ELEMENTI PARETE E/O GUSCIO IN C.A.

Per le pareti in c.a., in ottemperanza al cap. 7 del DM 17-01-18, viene effettuata una doppia progettazione: sia come *Singolo Elemento* sia come *Parete Sismica* o *Parete Debolmente Armata.*

Per la progettazione come *Singolo Elemento* di ogni elemento vengono riportati il codice dello stato di verifica con le sigle **Ok e NV,** il rapporto x/d, la verifica per sollecitazioni ultime (verifica a compressione media gli sforzi membranali, verifica a presso-flessionale e verifica a sollecitazioni taglianti), gli sforzi membranali e flessionali, il quantitativo di armatura nella direzione principale e secondaria sia inferiore che superiore e il quantitativo di armatura a taglio.

Per la progettazione come *Parete Sismica* o *Parete Debolmente Armata* vengono riportate invece le caratteristiche geometriche della parete e delle zone dissipative (quest'ultime solo nel caso di parete sismica), i coefficienti di verifica a compressione assiale, pressoflessione e sollecitazioni taglianti.

Inoltre vengono riportate per ogni quota significativa l'armatura principale e secondaria, l'armatura in zona confinata (solo per parete sismica) e non confinata, l'armatura concentrata all'estremità (per pareti debolmente armate), lo sforzo assiale aggiuntivo per q superiore a 2 e i valori di inviluppo di taglio e momento. Per le pareti debolmente armate viene riportato anche lo stato di verifica relativo alla snellezza.

Le azioni derivate dall'analisi, in ogni combinazione di calcolo, sono elaborate come previsto al punto 7.4.4.5.1: traslazione del momento, incremento e variazione diagramma taglio, incremento e decremento sforzo assiale

La progettazione nel caso dei gusci viene effettuata una progettazione come *Singolo Elemento,* riportando in tabella il rapporto x/d, la verifica per sollecitazioni ultime, (verifica a compressione media gli sforzi membranali, verifica a presso-flessionale e verifica a sollecitazioni taglianti) di ogni elemento.

Per ogni elemento, viene riportata inoltre la maglia di armatura necessaria in relazione alle risultanze della progettazione dei nodi dell'elemento stesso. Le quantità di armature necessarie sono armature (disposte rispettivamente in direzione principale e secondaria, inferiore e superiore) distribuite nell'elemento ed espresse in centimetri quadri per sviluppo lineare pari ad un metro.

Nel caso dei gusci viene effettuata, inoltre, la verifica a punzonamento, riportando in tabella il codice dello stato di verifica, il coefficiente di verifica per piastre prive di armature a taglio lungo il perimetro resistente e lungo il perimetro del pilastro, coefficiente di incremento dovuto ai momenti flettenti, fattore di amplificazione per le fondazioni, il fattorei di amplificazione dell'altezza utile per individuare il perimetro di verifica lungo il quale l'armatura a taglio non è richiesta, il quantitativo di armatura a punzonamento, il numero di serie di armature, il numero di braccia di armatura ed il riferimento alla combinazione più gravosa.

Simbologia adottata nelle tabelle di verifica

Per gli elementi con progettazione "*Singolo Elemento …*" è presente una tabella con i simboli di seguito descritti:

Macro Guscio	Numero del macroelemento di tipo guscio (elementi non verticali contigui ed analoghi per proprietà)
Macro Setto	Numero del macroelemento di tipo setto (elementi verticali contigui ed analoghi per proprietà)
Spessore	Spessore della parete
Id Materiale	Codice del materiale assegnato all'elemento
Id Criterio	Codice del criterio di progetto assegnato all'elemento
Progettazione	Sigla tipo di Elemento: - Singolo Elemento; - Singolo Elemento FONDAZIONE; - Singolo Elemento NON DISSIPATIVO

Per gli elementi con progettazione "*Parete Sismica o Parete Debolmente Armata*" è presente una tabella con i simboli di seguito descritti:

Parete	Numero della PARETE SISMICA
Parete PDA	Numero della PARETE DEBOLMENTE ARMATA
H totale	Altezza complessiva della parete
Spessore	Spessore della parete
H critica	Altezza come da punto 7.4.4.5.1 per traslazione momento (solo in Parete Sismica)
H critica V	Altezza della zona dissipativa (solo in Parete Sismica)
L totale	Larghezza di base della parete
L confinata	Lunghezza della zona dissipativa (solo in Parete Sismica)
Verif. N	Verifica di cui al punto 7.4.4.5.1 compressione semplice
Verif. N-M	Verifica di cui al punto 7.4.4.5.1 pressoflessione
Fattore V	Fattore di amplificazione del taglio di cui al punto 7.4.4.5.1
Diagramma V	Diagramma elaborato per effetto modi superiori come da fig. 7.4.4
Verif. V	Verifica di cui al punto 7.4.4.5.1 taglio (compressione cls, trazione acciaio, scorrimento in zona critica) (solo in Parete Sismica)
Verifica Snellezza	Verifica di cui al punto 7.4.4.5.1 limitazione compressione per prevenire l'instabilità (solo in Parete Debolmente Armata)
Prog. composta	Sigla per la progettazione composta

Per le verifiche degli elementi con progettazione "*Singolo Elemento …*" e *Progettazione Composta* è presente una tabella con i simboli di seguito descritti:

Nodo	numero del nodo
Stato	codice di verifica dell'elemento **ok** o **NV**
x/d	rapporto tra posizione dell'asse neutro e altezza utile alla rottura della sezione (per sola flessione)

V N/M	Verifica delle sollecitazioni Normali (momento e sforzo normale)
Ver. rid	Rapporto Nd/Nu (Nu ottenuto con riduzione del 25% di fcd)
Af pr+	quantità di armatura richiesta in direzione principale relativa alla faccia positiva (estradosso piastre) (valore derivante da calcolo o minimo normativo)
Af pr-	quantità di armatura richiesta in direzione principale relativa alla faccia negativa (intradosso piastre) (valore derivante da calcolo o minimo normativo)
Af sec+	quantità di armatura richiesta in direzione secondaria relativa alla faccia positiva (estradosso piastre) (valore derivante da calcolo o minimo normativo)
Af sec-	quantità di armatura richiesta in direzione secondaria relativa alla faccia negativa (intradosso piastre) (valore derivante da calcolo o minimo normativo)
Nz No Nzo	Sforzi membranali per pareti e\o setti verticali
Mz Mo Mzo	Sforzi flessionali per pareti e\o setti verticali
Nx Ny Nxy	Sforzi membranali per gusci orizzontali
Mx Mx Mxy	Sforzi flessionali per gusci orizzontali

Nodo	numero del nodo
Stato	codice di verifica dell'elemento **ok** o **NV**
Max tau	Tensione tangenziale Massima
Ver V pr	Verifica a taglio nella direzione principale lato calcestruzzo
Ver V sec	Verifica a taglio nella direzione secondaria lato calcestruzzo
Af V pr	Armatura nella direzione principale
V pr-	Verifica dell'armatura nella direzione principale
Af V sec	Armatura nella direzione secondaria
V sec-	Verifica dell'armatura nella direzione secondaria

Per le verifiche degli elementi con progettazione "*Parete Sismica o Parete Debolmente Armata*", oltre alla tabella con le verifiche per gli elementi con progettazione "*Singolo Elemento …*", è presente una tabella con i simboli di seguito descritti:

Quota	Ascissa verticale di riferimento
Af conf.	Numero e diametro armatura presente in una zona confinata
Af std	Diametro e passo armatura in zona non confinata (doppia maglia)
Af estremi	Diametro dei ferri di estremità del pannello; se posto uguale 0, viene utilizzato il diametro standard
Af V (ori)	Diametro e passo armatura orizzontale (doppia maglia)
Ver. N	Rapporto tra azione di calcolo e resistenza a compressione (normalizzato a 1 in quanto da confrontare con 40% in CDB e 35 % in CDA)
Ver. N/M	Rapporto tra azione di calcolo e resistenza a pressoflessione
Ver. V acc(7)	Rapporto tra azione di calcolo e resistenza a taglio-trazione per alfaS minore di 2 secondo paragrafo 7.4.4.5.1
Ver. V cls	Rapporto tra azione di calcolo e resistenza a taglio-compressione
Ver. V acc	Rapporto tra azione di calcolo e resistenza a taglio-trazione
Ver. V scorr.	Rapporto tra azione di calcolo e resistenza a taglio scorrimento
N add	Sforzo assiale di cui al punto 7.4.4.5.1 da sommare e sottrarre nelle verifiche quando q supera 2
N invil M invil	Inviluppo del Momento e Sforzo Normale come al punto 7.4.4.5.1 (informativo) (solo in Parete Sismica)

Quota	Ascissa verticale di riferimento
N v.N	Valore dello sforzo assiale per cui Ver. N attinge il massimo valore
N v.M/N, M v.M/N	Valore dello sforzo assiale e momento per cui Ver. N/M attinge il massimo valore
N v.M/N, M v.M/N Mo v.M/N	Valore dello sforzo assiale e dei momenti per cui Ver. N/M attinge il massimo valore (per le pareti estese debolmente armate)
N v.Vcls, V v.Vcls,	Valore dello sforzo assiale e taglio per cui Ver. V. cls attinge il massimo valore
N v.Vacc, M v.Vacc, V v.Vacc,	Valore dello sforzo assiale, momento e taglio per cui Ver. V. acc attinge il massimo valore
N v.Vscorr, M v.Vscorr, V v.Vscorr,	Valore dello sforzo assiale, momento e taglio per cui Ver. V. scorr.e
N v.N	Valore dello sforzo assiale per cui Ver. N attinge il massimo valore
N v.M/N, M v.M/N	Valore dello sforzo assiale e momento per cui Ver. N/M attinge il massimo valore
N v.M/N, M v.M/N Mo v.M/N	Valore dello sforzo assiale e dei momenti per cui Ver. N/M attinge il massimo valore (per le pareti estese debolmente armate)
N v.Vcls, V v.Vcls,	Valore dello sforzo assiale e taglio per cui Ver. V. cls attinge il massimo valore

Quota	Ascissa verticale di riferimento
CtgT Vcls	Valore di ctg(teta) adottato nella verifica V compressione cls
Vrsd Vcls	Valore della resistenza a taglio trazione (armatura di calcolo)
Vrcd Vcls	Valore della resistenza a taglio compressione
CtgT Vacc	Valore di ctg(teta) adottato nella verifica V trazione armatura
Vrsd Vacc	Valore della resistenza a taglio trazione (armatura presente)
Vrcd Vacc	Valore della resistenza a taglio compressione
Vdd	Valore del contributo alla resistenza allo scorrimento come da [7.4.20]
Vid	Valore del contributo alla resistenza allo scorrimento come da [7.4.21]
A s.i.	Somma delle aree di armature
Incli.	Angolo di inclinazione delle armature
Dist.	Distanza alla base tra le armature inclinate

Quota	Ascissa verticale di riferimento
V[7.4.16]	Verifica a taglio-trazione dell'armatura dell'anima (7.4.16)
N M V	Sollecitazioni di calcolo della condizione più gravosa
Alfas	Rapporto di Taglio
Vrd,c	Resistenza a taglio degli elementi non armati
VRd,s	Resistenza a taglio nei confronti dello scorrimento
V[7.4.17]	Verifica a taglio-trazione dell'armatura dell'anima (7.4.17)
roH	Rapporto tra l'armatura orizzontale e l'area della sezione relativa di calcestruzzo
roV	Rapporto tra l'armatura verticale e l'area della sezione relativa di calcestruzzo
roN	Sforzo normale adimensionalizzato Ned/(bw fyd)

Per la verifica a *Punzonamento* è presente una tabella con i simboli di seguito descritti:

Nodo	numero del nodo
Stato	codice di verifica dell'elemento **ok** o **NV**
V. 6.47	Fattore di sicurezza per la verifica per piastre prive di armature a taglio lungo il perimetro resistente U1
V. 6.53	Fattore di sicurezza per la verifica per piastre prive di armature a taglio lungo il perimetro del pilastro U0
Beta	Fattore di incremento dovuto ai momenti flettenti
f. a fon	fattore di amplificazione per le fondazioni (solo per gusci di fondazione)
f. Uout	fattore di amplificazione dell'altezza utile per individuare il perimetro di verifica lungo il quale l'armatura a taglio non è richiesta
Aw tot	Quantitativo di armatura per la verifica di piastre munite di armatura (formula 6.52 dell'EC2)
Asw,min	Quantitativo minimo di armatura previsto dai dettagli costruttivi (formula 9.11 dell'EC2)
n. x serie	Numero di serie di armature
n.ser 0(R)	Numero di braccia delle armatura in direzione 0 (o numero di braccia radiale)
n.ser 90	Numero di braccia delle armatura in direzione 90 (solo se armatura cruciforme)
Rif. cmb	Riferimento combinazioni da cui si generano le verifiche più gravose

Macro Setto	Spessore	Id Materiale	Id Criterio	Progettazione
	cm			
2	15.00	1	1	Singolo elemento NON DISSIPATIVO

Nodo	Stato	x/d	V N/M	ver. rid	Af pr-	Af pr+	Af sec-	Af sec+	N z	N o	N zo	M z	M o	M zo
									kN/ m	kN/ m	kN/ m	kN	kN	kN
237	ok	0.24	0.5	0.2	5.7	5.7	2.5	2.5	-434.7	-81.9	88.3	-2.5	-7.08e-02	0.1
284	ok	0.24	0.5	0.1	5.7	5.7	2.5	2.5	-267.8	-54.1	80.0	-2.5	-0.4	0.1
331	ok	0.24	0.3	3.90e-02	5.7	5.7	2.5	2.5	-71.6	-16.1	-2.5	2.5	0.5	5.80e-04
378	ok	0.24	0.2	2.85e-02	5.7	5.7	2.5	2.5	-62.8	-13.5	-21.4	2.1	0.5	-7.86e-03
425	ok	0.24	0.1	2.24e-02	5.7	5.7	2.5	2.5	-41.8	-10.8	19.3	-0.2	-1.96e-02	1.90e-02
472	ok	0.24	0.1	2.37e-02	5.7	5.7	2.5	2.5	-50.1	-8.0	-16.6	1.3	0.3	-1.66e-02
519	ok	0.24	0.1	5.64e-02	5.7	5.7	2.5	2.5	-124.8	-22.1	-37.5	1.5	0.1	1.74e-03
612	ok	0.24	0.8	0.1	5.7	5.7	2.5	2.5	-307.7	-0.3	54.9	-2.4	-0.1	-4.24e-02
617	ok	0.24	0.5	0.1	5.7	5.7	2.5	2.5	-257.8	-48.0	61.7	-2.5	-0.4	-9.58e-02
640	ok	0.24	0.3	3.78e-02	5.7	5.7	2.5	2.5	-70.5	11.5	-9.8	2.2	0.5	0.1
663	ok	0.24	0.1	2.55e-02	5.7	5.7	2.5	2.5	-58.7	15.5	-11.0	1.8	0.4	0.1
686	ok	0.24	7.56e-02	2.23e-02	5.7	5.7	2.5	2.5	-52.8	-10.3	-11.5	1.3	0.3	0.1
709	ok	0.24	6.74e-02	2.63e-02	5.7	5.7	2.5	2.5	-44.1	-14.8	-31.8	1.2	0.3	0.1
732	ok	0.24	0.1	4.03e-02	5.7	5.7	2.5	2.5	-80.8	-8.9	-20.1	-6.78e-02	-0.3	0.3
777	ok	0.24	0.2	5.87e-02	5.7	5.7	2.5	2.5	-146.7	-4.8	-9.5	-0.7	-0.3	-1.37e-02
782	ok	0.24	0.3	6.91e-02	5.7	5.7	2.5	2.5	-161.4	-23.1	41.1	-0.7	-0.1	-0.3
805	ok	0.24	0.2	3.00e-02	5.7	5.7	2.5	2.5	-45.6	-28.8	34.5	1.0	0.2	-0.2
828	ok	0.24	0.1	2.72e-02	5.7	5.7	2.5	2.5	-46.0	5.2	-17.1	-0.9	-0.2	0.2
851	ok	0.24	8.32e-02	2.23e-02	5.7	5.7	2.5	2.5	-43.0	-7.4	-23.2	-1.0	-0.2	0.4
874	ok	0.24	7.76e-02	2.49e-02	5.7	5.7	2.5	2.5	-49.2	-3.2	-22.5	-0.5	-9.84e-02	0.4
897	ok	0.24	0.1	2.85e-02	5.7	5.7	2.5	2.5	-65.5	-1.9	-16.1	-0.1	-0.1	0.4
942	ok	0.24	0.1	4.20e-02	5.7	5.7	2.5	2.5	-105.5	-2.8	2.4	-2.57e-02	-6.40e-03	-3.82e-02
947	ok	0.24	0.2	4.29e-02	5.7	5.7	2.5	2.5	-75.7	-9.5	15.1	-0.5	-0.1	-0.1
992	ok	0.24	0.2	2.63e-02	5.7	5.7	2.5	2.5	-44.4	-15.3	31.2	0.8	0.2	-0.1
1037	ok	0.24	8.97e-02	2.50e-02	5.7	5.7	2.5	2.5	-50.0	1.2	-18.1	-1.2	-0.2	0.1
1082	ok	0.24	8.99e-02	2.29e-02	5.7	5.7	2.5	2.5	-44.9	-3.5	-23.5	-1.3	-0.3	0.2
1127	ok	0.24	6.85e-02	2.30e-02	5.7	5.7	2.5	2.5	-46.6	-1.6	-20.3	-0.7	-0.1	0.2
1172	ok	0.24	7.82e-02	2.32e-02	5.7	5.7	2.5	2.5	-44.7	-2.7	20.5	0.2	-5.49e-03	-0.2
1217	ok	0.24	6.04e-02	2.78e-02	5.7	5.7	2.5	2.5	-70.0	-1.3	-0.9	0.2	-8.96e-04	1.55e-02
1222	ok	0.24	9.68e-02	3.02e-02	5.7	5.7	2.5	2.5	-71.7	-5.0	14.3	-0.8	-0.2	-0.1
1245	ok	0.24	0.1	2.36e-02	5.7	5.7	2.5	2.5	-44.7	-10.8	25.2	-0.7	-0.2	-0.2
1268	ok	0.24	9.28e-02	1.79e-02	5.7	5.7	2.5	2.5	-33.4	3.1	-19.7	0.8	0.1	0.2
1291	ok	0.24	8.33e-02	1.94e-02	5.7	5.7	2.5	2.5	-41.2	3.26e-02	-16.9	0.5	0.1	0.2
1314	ok	0.24	8.41e-02	1.98e-02	5.7	5.7	2.5	2.5	-44.8	1.2	-15.1	0.3	8.90e-02	0.2
1337	ok	0.24	7.32e-02	2.00e-02	5.7	5.7	2.5	2.5	-36.2	-1.2	21.7	-7.57e-03	-6.79e-02	-0.3
1382	ok	0.24	4.85e-02	2.30e-02	5.7	5.7	2.5	2.5	-57.8	-1.0	0.5	-0.1	1.00e-04	-3.68e-03
1387	ok	0.24	6.69e-02	2.38e-02	5.7	5.7	2.5	2.5	-58.6	-3.2	7.7	-0.1	-1.77e-02	2.75e-03
1410	ok	0.24	0.1	2.01e-02	5.7	5.7	2.5	2.5	-38.3	-6.9	22.0	-4.93e-02	6.75e-03	-0.1
1433	ok	0.24	9.71e-02	1.73e-02	5.7	5.7	2.5	2.5	-32.6	-0.5	-20.1	-1.4	-0.3	0.3

1456	ok	0.24	9.21e-02	1.86e-02	5.7	5.7	2.5	2.5	-33.1	-0.7	-21.7	-0.9	-0.2	0.3
1479	ok	0.24	9.04e-02	1.84e-02	5.7	5.7	2.5	2.5	-17.5	0.9	-19.5	-0.4	-9.13e-02	0.3
1502	ok	0.24	7.87e-02	1.80e-02	5.7	5.7	2.5	2.5	-33.0	-1.1	22.2	-3.77e-02	-5.24e-02	-0.3
1547	ok	0.24	7.64e-02	1.99e-02	5.7	5.7	2.5	2.5	-48.8	-1.0	-0.4	-0.9	-0.2	0.3
1552	ok	0.24	0.1	2.12e-02	5.7	5.7	2.5	2.5	-50.7	-1.1	0.8	-1.3	-0.2	0.5
1597	ok	0.24	0.1	1.78e-02	5.7	5.7	2.5	2.5	-27.2	-3.6	16.5	-0.6	-0.1	-8.57e-02
1642	ok	0.24	0.1	1.77e-02	5.7	5.7	2.5	2.5	-32.9	-1.0	-21.3	-1.6	-0.3	0.2
1687	ok	0.24	9.14e-02	1.81e-02	5.7	5.7	2.5	2.5	-33.3	-1.0	-22.3	-1.1	-0.2	0.2
1732	ok	0.24	7.53e-02	1.68e-02	5.7	5.7	2.5	2.5	-16.6	-0.3	-17.8	-0.6	-0.1	0.1
1777	ok	0.24	7.39e-02	1.71e-02	5.7	5.7	2.5	2.5	-26.6	-2.3	19.5	0.2	-1.47e-02	-0.2
1822	ok	0.24	4.95e-02	1.59e-02	5.7	5.7	2.5	2.5	-34.3	-0.6	0.2	4.79e-02	-0.3	5.11e-02
1827	ok	0.24	6.31e-02	1.72e-02	5.7	5.7	2.5	2.5	-31.0	-1.0	-6.5	0.3	-3.28e-02	0.3
1850	ok	0.24	9.73e-02	1.46e-02	5.7	5.7	2.5	2.5	-26.4	-2.1	16.9	-0.9	-0.2	-0.2
1873	ok	0.24	9.91e-02	1.31e-02	5.7	5.7	2.5	2.5	-14.3	-2.7	19.0	-1.2	-0.2	-0.3
1896	ok	0.24	9.11e-02	1.36e-02	5.7	5.7	2.5	2.5	-22.1	-2.2	16.8	-0.7	-0.1	-0.3
1919	ok	0.24	8.74e-02	1.40e-02	5.7	5.7	2.5	2.5	-23.0	-2.0	19.0	-0.3	-4.76e-02	-0.3
1942	ok	0.24	8.32e-02	1.45e-02	5.7	5.7	2.5	2.5	-21.4	-0.9	20.5	-1.67e-02	-3.44e-02	-0.3
1987	ok	0.24	3.99e-02	1.48e-02	5.7	5.7	2.5	2.5	-36.5	-0.3	-0.3	-1.3	9.59e-02	-7.19e-02
1992	ok	0.24	5.09e-02	1.59e-02	5.7	5.7	2.5	2.5	-36.4	-1.3	-7.3	-1.6	-0.3	0.3
2015	ok	0.24	8.62e-02	1.48e-02	5.7	5.7	2.5	2.5	-30.2	-3.7	-14.5	-1.7	-0.4	0.4
2038	ok	0.24	9.13e-02	1.29e-02	5.7	5.7	2.5	2.5	-21.8	-3.2	-11.6	-1.3	-0.3	0.3
2061	ok	0.24	8.99e-02	1.30e-02	5.7	5.7	2.5	2.5	-21.0	-7.44e-03	-17.1	-0.9	-0.2	0.3
2084	ok	0.24	8.51e-02	1.36e-02	5.7	5.7	2.5	2.5	-14.7	-1.3	22.6	0.3	7.10e-02	-0.3
2107	ok	0.24	8.54e-02	1.35e-02	5.7	5.7	2.5	2.5	-19.8	-1.3	20.6	-4.96e-02	-3.63e-02	-0.2
2152	ok	0.24	9.14e-02	1.49e-02	5.7	5.7	2.5	2.5	-36.5	-0.5	-1.6	-1.3	-0.4	0.6
2157	ok	0.24	0.1	1.64e-02	5.7	5.7	2.5	2.5	-38.9	-0.8	4.08e-02	-1.7	-0.5	0.8
2202	ok	0.24	8.66e-02	1.52e-02	5.7	5.7	2.5	2.5	-29.5	-4.0	-4.8	-2.0	-0.4	0.3
2247	ok	0.24	8.87e-02	1.31e-02	5.7	5.7	2.5	2.5	-21.4	-4.6	-17.2	-1.6	-0.3	0.2
2292	ok	0.24	8.15e-02	1.31e-02	5.7	5.7	2.5	2.5	-21.0	-3.3	-17.9	-1.1	-0.2	0.2
2337	ok	0.24	7.84e-02	1.35e-02	5.7	5.7	2.5	2.5	-11.1	0.5	14.4	-0.1	-3.17e-02	-0.2
2382	ok	0.24	7.98e-02	1.30e-02	5.7	5.7	2.5	2.5	-14.4	-0.8	16.6	7.44e-02	-1.70e-02	-0.2
2432	ok	0.24	0.1	2.42e-02	5.7	5.7	2.5	2.5	-60.8	-3.6	-0.1	-1.2	-0.3	-2.52e-02
2437	ok	0.24	0.2	2.90e-02	5.7	5.7	2.5	2.5	-64.2	-12.2	-22.0	-1.2	-0.2	0.4
2460	ok	0.24	0.1	1.49e-02	5.7	5.7	2.5	2.5	-8.0	-5.1	-9.3	0.9	0.2	0.3
2483	ok	0.24	0.1	8.25e-03	5.7	5.7	2.5	2.5	-7.4	3.7	14.1	-1.1	-0.2	-0.3
2506	ok	0.24	0.1	9.01e-03	5.7	5.7	2.5	2.5	-9.9	4.6	16.2	-0.7	-0.2	-0.3
2529	ok	0.24	9.28e-02	9.21e-03	5.7	5.7	2.5	2.5	-9.3	2.2	18.0	-0.2	-7.47e-02	-0.3
2552	ok	0.24	7.23e-02	1.03e-02	5.7	5.7	2.5	2.5	-9.6	0.3	16.5	-1.39e-03	-5.78e-02	-0.3
2750	ok	0.24	0.7	9.38e-02	5.7	5.7	2.5	2.5	178.0	43.5	79.8	2.7	0.3	0.1
2755	ok	0.24	0.3	5.49e-02	5.7	5.7	2.5	2.5	-89.5	-35.9	-36.5	-4.0	-0.6	-0.2
2778	ok	0.24	0.2	2.04e-02	5.7	5.7	2.5	2.5	45.5	-8.5	-14.5	-2.2	-0.4	-9.39e-02
2801	ok	0.24	0.1	9.14e-03	5.7	5.7	2.5	2.5	-11.4	-6.4	-4.3	-2.3	-0.4	7.15e-02
2824	ok	0.24	8.78e-02	6.84e-03	5.7	5.7	2.5	2.5	-3.5	5.9	11.1	1.0	0.2	-0.1
2847	ok	0.24	7.71e-02	7.74e-03	5.7	5.7	2.5	2.5	-6.1	5.1	12.3	0.4	4.51e-02	-0.1
2870	ok	0.24	6.84e-02	9.11e-03	5.7	5.7	2.5	2.5	-7.3	-0.3	12.5	-0.2	-0.1	-0.2
3010	ok	0.24	0.6	0.1	5.7	5.7	2.5	2.5	-311.7	-93.6	-87.3	-5.5	-0.2	-0.7
3057	ok	0.24	0.4	6.73e-02	5.7	5.7	2.5	2.5	-84.0	-28.0	-33.1	-4.4	-0.8	-0.5
3104	ok	0.24	0.2	1.99e-02	5.7	5.7	2.5	2.5	46.3	5.2	-13.6	-2.3	-0.4	-0.3
3151	ok	0.24	0.2	7.23e-03	5.7	5.7	2.5	2.5	-12.6	-11.4	-5.4	-2.4	-0.5	-0.2
3198	ok	0.24	0.1	6.67e-03	5.7	5.7	2.5	2.5	-2.7	10.2	9.7	0.9	0.2	3.47e-02
3245	ok	0.24	7.31e-02	5.85e-03	5.7	5.7	2.5	2.5	-5.5	5.0	8.5	0.3	5.72e-02	-5.87e-03
3292	ok	0.24	4.76e-02	6.81e-03	5.7	5.7	2.5	2.5	-9.4	2.6	11.4	-1.56e-02	-2.69e-02	-6.09e-02

Nodo	**x/d**	**V N/M**	**ver. rid**	**Af pr-**	**Af pr+**	**Af sec-**	**Af sec+**	**N z**	**N o**	**N zo**	**M z**	**M o**	**M zo**
								-434.66	-93.58	-87.34	-5.55	-0.75	-0.74
	0.24	0.79	0.18	5.65	5.65	2.51	2.51	178.03	43.52	88.34	2.68	0.54	0.81

Nodo	**Stato**	**Max tau**	**Ver V pr**	**Ver V sec**	**Af V pr**	**Af V sec**	**V pr**	**V sec**
		kN/ m2					kN/ m	kN/ m
237	ok	1.39						
284	ok	1.31						
331	ok	0.87						
378	ok	0.59						
425	ok	0.39						
472	ok	0.42						
519	ok	1.27						
612	ok	1.83						
617	ok	0.97						
640	ok	0.84						
663	ok	0.66						
686	ok	0.41						
709	ok	0.53						
732	ok	0.60						
777	ok	1.80						
782	ok	0.95						
805	ok	0.78						
828	ok	0.64						

851	ok	0.43
874	ok	0.29
897	ok	0.27
942	ok	1.08
947	ok	0.93
992	ok	0.80
1037	ok	0.56
1082	ok	0.43
1127	ok	0.25
1172	ok	0.39
1217	ok	1.49
1222	ok	0.70
1245	ok	0.61
1268	ok	0.48
1291	ok	0.31
1314	ok	0.25
1337	ok	0.32
1382	ok	1.47
1387	ok	0.70
1410	ok	0.62
1433	ok	0.48
1456	ok	0.31
1479	ok	0.21
1502	ok	0.27
1547	ok	0.54
1552	ok	0.73
1597	ok	0.63
1642	ok	0.44
1687	ok	0.32
1732	ok	0.20
1777	ok	0.35
1822	ok	1.46
1827	ok	0.70
1850	ok	0.63
1873	ok	0.49
1896	ok	0.33
1919	ok	0.23
1942	ok	0.30
1987	ok	1.46
1992	ok	0.66
2015	ok	0.61
2038	ok	0.49
2061	ok	0.32
2084	ok	0.22
2107	ok	0.25
2152	ok	1.27
2157	ok	1.19
2202	ok	0.78
2247	ok	0.47
2292	ok	0.31
2337	ok	0.20
2382	ok	0.31
2432	ok	2.06
2437	ok	1.23
2460	ok	0.79
2483	ok	0.49
2506	ok	0.29
2529	ok	0.17
2552	ok	0.28
2750	ok	1.98
2755	ok	1.60
2778	ok	0.72
2801	ok	0.54
2824	ok	0.27
2847	ok	0.18
2870	ok	0.24
3010	ok	2.05
3057	ok	1.82
3104	ok	0.67
3151	ok	0.46
3198	ok	0.27
3245	ok	0.18
3292	ok	0.27

Nodo	Max tau	Ver V pr	Ver V sec	Af V pr	Af V sec	V pr	V sec
	2.06						

Macro Setto	Spessore	Id Materiale	Id Criterio	Progettazione
	cm			

Macro Setto	Spessore	Id Materiale	Id Criterio	Progettazione
3	15.00	1	1	Singolo elemento NON DISSIPATIVO

Nodo	Stato	x/d	V N/M	ver. rid	Af pr-	Af pr+	Af sec-	Af sec+	N z	N o	N zo	M z	M o	M zo
									kN/ m	kN/ m	kN/ m	kN	kN	kN
247	ok	0.24	0.4	0.2	5.7	5.7	2.5	2.5	-492.9	-84.3	93.2	0.2	7.12e-04	-4.92e-03
294	ok	0.24	0.3	0.1	5.7	5.7	2.5	2.5	-323.9	-63.5	97.1	0.2	1.46e-02	-7.53e-03
341	ok	0.24	0.3	3.42e-02	5.7	5.7	2.5	2.5	-66.8	-16.2	1.0	2.7	0.6	-4.12e-02
388	ok	0.24	0.2	2.56e-02	5.7	5.7	2.5	2.5	-55.3	-13.4	-20.3	2.0	0.4	-4.02e-02
435	ok	0.24	0.1	1.98e-02	5.7	5.7	2.5	2.5	-44.3	-7.6	6.4	1.3	0.3	-4.76e-02
482	ok	0.24	7.62e-02	1.95e-02	5.7	5.7	2.5	2.5	-26.6	-3.8	2.0	0.7	0.2	-5.85e-02
529	ok	0.24	4.58e-02	2.61e-02	5.7	5.7	2.5	2.5	-44.9	-12.5	-18.5	0.1	-2.81e-02	-3.11e-02
613	ok	0.24	0.7	0.1	5.7	5.7	2.5	2.5	-319.2	4.3	46.8	0.1	9.86e-04	1.53e-03
622	ok	0.24	0.5	0.1	5.7	5.7	2.5	2.5	-280.7	-46.5	63.0	9.95e-02	1.00e-03	5.07e-03
645	ok	0.24	0.3	3.43e-02	5.7	5.7	2.5	2.5	-68.3	5.8	-4.5	2.5	0.5	0.1
668	ok	0.24	0.1	2.31e-02	5.7	5.7	2.5	2.5	-53.1	12.6	-9.2	1.9	0.4	0.1
691	ok	0.24	7.31e-02	1.83e-02	5.7	5.7	2.5	2.5	-45.3	-6.9	-4.5	1.2	0.3	0.1
714	ok	0.24	4.01e-02	1.79e-02	5.7	5.7	2.5	2.5	-33.3	-4.1	0.2	0.6	0.1	0.1
742	ok	0.24	4.41e-02	2.12e-02	5.7	5.7	2.5	2.5	-43.6	-11.7	-11.6	-1.25e-02	-0.1	0.2
778	ok	0.24	0.1	6.62e-02	5.7	5.7	2.5	2.5	-165.5	-3.2	-11.0	-3.31e-02	1.94e-03	-8.39e-04
787	ok	0.24	0.2	7.62e-02	5.7	5.7	2.5	2.5	-180.8	-22.2	40.2	-4.19e-02	-4.46e-03	9.11e-03
810	ok	0.24	0.2	3.31e-02	5.7	5.7	2.5	2.5	-61.0	-30.3	31.8	-5.06e-02	-1.18e-02	7.62e-03
833	ok	0.24	0.1	2.40e-02	5.7	5.7	2.5	2.5	-40.6	3.6	-9.0	-1.4	-0.3	0.2
856	ok	0.24	7.69e-02	1.82e-02	5.7	5.7	2.5	2.5	-41.0	-3.9	-6.9	-0.9	-0.2	0.2
879	ok	0.24	4.86e-02	1.82e-02	5.7	5.7	2.5	2.5	-36.6	-1.2	-9.0	-0.4	-9.31e-02	0.2
907	ok	0.24	3.76e-02	1.63e-02	5.7	5.7	2.5	2.5	-38.4	0.3	-8.3	-9.18e-03	4.67e-03	0.2
943	ok	0.24	0.2	4.80e-02	5.7	5.7	2.5	2.5	-120.7	-3.0	2.5	-8.79e-02	-3.38e-03	-9.72e-03
957	ok	0.24	0.2	4.88e-02	5.7	5.7	2.5	2.5	-118.5	-17.1	19.6	-0.2	-2.60e-02	6.63e-03
1002	ok	0.24	0.1	3.03e-02	5.7	5.7	2.5	2.5	-60.5	-16.2	28.1	-0.2	-3.49e-02	2.62e-03
1047	ok	0.24	9.98e-02	2.15e-02	5.7	5.7	2.5	2.5	-46.3	-2.0	-9.4	-1.5	-0.3	6.58e-02
1092	ok	0.24	5.13e-02	1.81e-02	5.7	5.7	2.5	2.5	-43.7	-3.7	-7.4	-1.0	-0.2	7.65e-02
1137	ok	0.24	3.38e-02	1.79e-02	5.7	5.7	2.5	2.5	-30.0	-2.5	-11.4	0.5	0.1	6.50e-02
1182	ok	0.24	2.33e-02	1.42e-02	5.7	5.7	2.5	2.5	-34.4	-0.7	-3.2	-8.28e-02	-1.47e-02	7.08e-02
1218	ok	0.24	9.17e-02	3.05e-02	5.7	5.7	2.5	2.5	-76.5	-0.9	-1.5	8.43e-02	-3.72e-03	4.10e-03
1227	ok	0.24	0.1	3.39e-02	5.7	5.7	2.5	2.5	-83.5	-3.8	11.7	1.46e-02	-8.94e-03	4.46e-03
1250	ok	0.24	0.1	2.45e-02	5.7	5.7	2.5	2.5	-52.6	-10.5	19.4	2.66e-02	5.55e-03	5.19e-03
1273	ok	0.24	8.89e-02	1.74e-02	5.7	5.7	2.5	2.5	-28.1	-8.2	18.1	2.90e-02	7.79e-03	5.09e-03
1296	ok	0.24	5.21e-02	1.48e-02	5.7	5.7	2.5	2.5	-33.2	-1.6	-8.6	0.9	0.2	0.2
1319	ok	0.24	3.24e-02	1.38e-02	5.7	5.7	2.5	2.5	-30.9	-0.2	-9.8	0.4	8.97e-02	0.2
1347	ok	0.24	2.08e-02	1.33e-02	5.7	5.7	2.5	2.5	-28.9	0.2	-8.0	6.02e-03	-6.64e-03	0.2
1383	ok	0.24	8.79e-02	2.63e-02	5.7	5.7	2.5	2.5	-56.4	0.9	1.7	-1.7	5.17e-02	-0.2
1392	ok	0.24	0.1	2.72e-02	5.7	5.7	2.5	2.5	-54.8	1.0	0.2	-2.0	-1.00e-02	-0.2
1415	ok	0.24	0.1	2.30e-02	5.7	5.7	2.5	2.5	-49.1	-7.5	16.1	-6.49e-02	-1.31e-02	4.18e-03
1438	ok	0.24	8.12e-02	1.75e-02	5.7	5.7	2.5	2.5	-29.4	-8.5	13.6	-6.51e-02	-9.45e-03	8.31e-03
1461	ok	0.24	5.92e-02	1.40e-02	5.7	5.7	2.5	2.5	-27.0	-1.1	-10.6	-0.9	-0.2	0.2
1484	ok	0.24	4.24e-02	1.31e-02	5.7	5.7	2.5	2.5	-26.1	5.17e-02	-11.2	-0.4	-9.80e-02	0.2
1512	ok	0.24	2.33e-02	1.16e-02	5.7	5.7	2.5	2.5	-27.5	0.6	-6.9	-3.34e-03	2.73e-02	0.2
1548	ok	0.24	0.1	2.62e-02	5.7	5.7	2.5	2.5	-58.4	-0.9	-0.6	-1.7	-0.3	0.7
1562	ok	0.24	0.2	2.72e-02	5.7	5.7	2.5	2.5	-59.8	-0.8	1.0	-2.1	-0.4	0.7
1607	ok	0.24	0.1	2.10e-02	5.7	5.7	2.5	2.5	-32.1	-3.1	9.1	2.0	0.4	0.1
1652	ok	0.24	8.42e-02	1.76e-02	5.7	5.7	2.5	2.5	-29.0	-4.6	17.7	-0.1	-2.79e-02	1.02e-03
1697	ok	0.24	6.29e-02	1.42e-02	5.7	5.7	2.5	2.5	-28.6	-2.9	-11.7	-1.0	-0.2	6.48e-02
1742	ok	0.24	4.40e-02	1.26e-02	5.7	5.7	2.5	2.5	-27.4	-2.3	-8.6	-0.5	-0.1	6.08e-02
1787	ok	0.24	3.00e-02	9.81e-03	5.7	5.7	2.5	2.5	-23.6	-2.2	-4.7	-8.92e-02	-1.34e-03	6.80e-02
1823	ok	0.24	9.87e-02	1.97e-02	5.7	5.7	2.5	2.5	-38.1	-0.5	4.33e-02	1.7	-5.42e-02	-0.2
1832	ok	0.24	0.1	2.10e-02	5.7	5.7	2.5	2.5	-42.5	-0.3	4.8	2.0	0.3	0.1
1855	ok	0.24	0.1	1.71e-02	5.7	5.7	2.5	2.5	-33.0	-2.2	7.6	1.8	0.3	0.2
1878	ok	0.24	9.23e-02	1.30e-02	5.7	5.7	2.5	2.5	-22.0	-3.6	11.6	4.63e-02	7.79e-03	7.89e-03
1901	ok	0.24	6.67e-02	1.00e-02	5.7	5.7	2.5	2.5	-18.8	-1.8	-8.9	0.9	0.2	0.2
1924	ok	0.24	4.51e-02	9.36e-03	5.7	5.7	2.5	2.5	-19.6	-1.4	-8.9	0.4	8.43e-02	0.2
1952	ok	0.24	3.32e-02	8.87e-03	5.7	5.7	2.5	2.5	-16.9	0.2	-6.8	7.65e-03	2.60e-03	0.2
1988	ok	0.24	8.27e-02	1.83e-02	5.7	5.7	2.5	2.5	-37.2	0.2	1.2	-0.1	4.93e-03	9.56e-03
1997	ok	0.24	0.1	1.95e-02	5.7	5.7	2.5	2.5	-33.0	-0.9	-6.3	-1.9	-0.3	0.1
2020	ok	0.24	0.1	1.60e-02	5.7	5.7	2.5	2.5	-19.8	-2.4	-4.9	-1.8	-0.3	0.2
2043	ok	0.24	9.32e-02	1.22e-02	5.7	5.7	2.5	2.5	-20.6	-1.6	12.5	-6.04e-02	-1.24e-02	9.11e-03
2066	ok	0.24	6.87e-02	9.84e-03	5.7	5.7	2.5	2.5	-17.4	-2.2	-8.5	-5.64e-02	-2.93e-02	0.2
2089	ok	0.24	4.12e-02	8.52e-03	5.7	5.7	2.5	2.5	-15.2	0.3	-6.7	-0.4	-7.49e-02	0.2
2117	ok	0.24	3.72e-02	7.31e-03	5.7	5.7	2.5	2.5	-16.1	0.4	-6.2	2.73e-03	3.93e-02	0.2
2153	ok	0.24	0.2	1.92e-02	5.7	5.7	2.5	2.5	-38.8	-1.1	-0.5	1.8	0.2	0.7
2167	ok	0.24	0.2	2.10e-02	5.7	5.7	2.5	2.5	-32.2	-0.8	0.8	2.2	0.3	0.8
2212	ok	0.24	0.1	1.44e-02	5.7	5.7	2.5	2.5	-18.0	-3.7	-3.5	-2.0	-0.4	0.2
2257	ok	0.24	9.78e-02	1.16e-02	5.7	5.7	2.5	2.5	-14.0	-1.0	5.6	1.3	0.3	8.71e-02
2302	ok	0.24	7.18e-02	1.01e-02	5.7	5.7	2.5	2.5	-7.2	0.6	9.9	0.8	0.2	7.74e-02
2347	ok	0.24	4.47e-02	8.28e-03	5.7	5.7	2.5	2.5	-16.8	-2.0	-7.5	-0.5	-0.1	6.22e-02
2392	ok	0.24	3.40e-02	5.44e-03	5.7	5.7	2.5	2.5	-12.5	-1.3	-3.7	-7.88e-02	1.14e-02	7.02e-02
2433	ok	0.24	0.1	2.40e-02	5.7	5.7	2.5	2.5	-37.7	1.0	-2.6	1.8	0.2	-0.1
2442	ok	0.24	0.1	2.73e-02	5.7	5.7	2.5	2.5	-39.2	-4.8	-11.6	2.0	0.4	0.3

2465	ok	0.24	0.1	1.35e-02	5.7	5.7	2.5	2.5	-13.1	-11.8	-8.8	1.7	0.4	0.3
2488	ok	0.24	0.1	7.19e-03	5.7	5.7	2.5	2.5	-12.9	-0.3	8.0	1.2	0.3	0.2
2511	ok	0.24	8.39e-02	6.08e-03	5.7	5.7	2.5	2.5	-8.0	1.8	9.1	0.7	0.2	0.2
2534	ok	0.24	5.24e-02	4.54e-03	5.7	5.7	2.5	2.5	-3.4	-0.9	7.3	0.3	8.29e-02	0.2
2562	ok	0.24	3.17e-02	3.89e-03	5.7	5.7	2.5	2.5	-9.1	0.3	-2.5	-1.21e-02	5.17e-03	0.2
2751	ok	0.24	0.7	7.81e-02	5.7	5.7	2.5	2.5	132.0	43.0	68.4	-9.32e-02	1.25e-02	1.79e-02
2760	ok	0.24	0.3	5.39e-02	5.7	5.7	2.5	2.5	-89.6	-31.7	-36.6	-0.3	-3.11e-02	-1.49e-02
2783	ok	0.24	0.3	1.69e-02	5.7	5.7	2.5	2.5	-17.8	2.8	5.8	-1.0	-0.2	9.60e-02
2806	ok	0.24	0.2	7.92e-03	5.7	5.7	2.5	2.5	-9.8	7.1	8.9	-0.6	-0.1	0.1
2829	ok	0.24	7.55e-02	6.10e-03	5.7	5.7	2.5	2.5	-7.8	-2.09e-02	6.6	-0.3	-3.84e-02	0.2
2852	ok	0.24	3.91e-02	4.36e-03	5.7	5.7	2.5	2.5	-4.3	-0.4	6.6	-0.1	-9.17e-03	0.2
2880	ok	0.24	3.30e-02	3.06e-03	5.7	5.7	2.5	2.5	-4.2	-1.9	3.9	0.2	0.1	0.3
3020	ok	0.24	0.4	0.1	5.7	5.7	2.5	2.5	-316.1	-80.7	-80.8	-0.5	-1.05e-02	-5.37e-02
3067	ok	0.24	0.4	6.19e-02	5.7	5.7	2.5	2.5	-80.7	-21.0	-31.9	-0.4	-5.69e-02	-3.99e-02
3114	ok	0.24	0.3	1.63e-02	5.7	5.7	2.5	2.5	32.8	16.1	6.7	-2.9	-0.6	-0.2
3161	ok	0.24	0.2	6.31e-03	5.7	5.7	2.5	2.5	-8.4	2.7	1.9	-0.2	-4.23e-02	-1.72e-02
3208	ok	0.24	9.86e-02	6.46e-03	5.7	5.7	2.5	2.5	-5.7	0.7	4.5	-1.1	-0.2	-0.1
3255	ok	0.24	4.45e-02	4.79e-03	5.7	5.7	2.5	2.5	-6.2	-3.09e-02	6.9	-0.4	-8.00e-02	-7.09e-02
3302	ok	0.24	2.00e-02	2.40e-03	5.7	5.7	2.5	2.5	-3.4	-0.8	3.6	0.1	-4.01e-02	-1.24e-02

Nodo	**x/d**	**V N/M**	**ver. rid**	**Af pr-**	**Af pr+**	**Af sec-**	**Af sec+**	**N z**	**N o**	**N zo**	**M z**	**M o**	**M zo**
								-492.92	-84.28	-80.80	-2.93	-0.64	-0.23
	0.24	0.75	0.21	5.65	5.65	2.51	2.51	131.97	43.01	97.10	2.65	0.57	0.79

Nodo	**Stato**	**Max tau**	**Ver V pr**	**Ver V sec**	**Af V pr**	**Af V sec**	**V pr**	**V sec**
		kN/ m2					kN/ m	kN/ m
247	ok	1.79						
294	ok	1.77						
341	ok	1.14						
388	ok	0.75						
435	ok	0.53						
482	ok	0.35						
529	ok	0.62						
613	ok	2.48						
622	ok	1.34						
645	ok	1.14						
668	ok	0.88						
691	ok	0.55						
714	ok	0.44						
742	ok	0.57						
778	ok	2.47						
787	ok	1.31						
810	ok	1.12						
833	ok	0.87						
856	ok	0.53						
879	ok	0.33						
907	ok	0.36						
943	ok	0.87						
957	ok	1.30						
1002	ok	1.11						
1047	ok	0.75						
1092	ok	0.52						
1137	ok	0.28						
1182	ok	0.38						
1218	ok	2.40						
1227	ok	1.26						
1250	ok	1.12						
1273	ok	0.86						
1296	ok	0.54						
1319	ok	0.32						
1347	ok	0.31						
1383	ok	2.40						
1392	ok	1.24						
1415	ok	1.11						
1438	ok	0.86						
1461	ok	0.52						
1484	ok	0.34						
1512	ok	0.31						
1548	ok	0.52						
1562	ok	1.24						
1607	ok	1.10						
1652	ok	0.74						
1697	ok	0.53						
1742	ok	0.29						
1787	ok	0.34						
1823	ok	2.36						
1832	ok	1.25						

1855	ok	1.12
1878	ok	0.86
1901	ok	0.55
1924	ok	0.32
1952	ok	0.31
1988	ok	2.36
1997	ok	1.20
2020	ok	1.10
2043	ok	0.86
2066	ok	0.52
2089	ok	0.34
2117	ok	0.32
2153	ok	1.35
2167	ok	1.53
2212	ok	1.15
2257	ok	0.74
2302	ok	0.50
2347	ok	0.29
2392	ok	0.33
2433	ok	2.49
2442	ok	1.61
2465	ok	1.16
2488	ok	0.76
2511	ok	0.44
2534	ok	0.26
2562	ok	0.34
2751	ok	2.48
2760	ok	1.83
2783	ok	1.07
2806	ok	0.82
2829	ok	0.42
2852	ok	0.26
2880	ok	0.42
3020	ok	2.28
3067	ok	2.03
3114	ok	1.10
3161	ok	0.70
3208	ok	0.41
3255	ok	0.25
3302	ok	0.43

Nodo	Max tau	Ver V pr	Ver V sec	Af V pr	Af V sec	V pr	V sec
	2.49						

Macro Setto	Spessore	Id Materiale	Id Criterio	Progettazione
	cm			
4	15.00	1	1	Singolo elemento NON DISSIPATIVO

Nodo	Stato	x/d	V N/M	ver. rid	Af pr-	Af pr+	Af sec-	Af sec+	N z	N o	N zo	M z	M o	M zo
									kN/ m	kN/ m	kN/ m	kN	kN	kN
259	ok	0.24	0.3	0.2	5.7	5.7	2.5	2.5	-489.0	-82.2	91.3	3.1	7.05e-02	-0.1
306	ok	0.24	0.3	0.1	5.7	5.7	2.5	2.5	-288.2	-53.7	83.7	3.1	0.5	-5.94e-02
353	ok	0.24	0.3	3.21e-02	5.7	5.7	2.5	2.5	-63.5	-15.7	3.5	-2.6	-0.6	4.46e-02
400	ok	0.24	0.2	2.40e-02	5.7	5.7	2.5	2.5	-52.4	-12.9	-18.4	-1.9	-0.4	4.06e-02
447	ok	0.24	0.1	1.97e-02	5.7	5.7	2.5	2.5	-42.5	-7.6	5.9	-1.3	-0.3	4.74e-02
494	ok	0.24	7.70e-02	1.96e-02	5.7	5.7	2.5	2.5	-33.6	-7.2	-9.7	-0.6	-0.1	4.93e-02
541	ok	0.24	4.38e-02	2.62e-02	5.7	5.7	2.5	2.5	-43.5	-12.7	-19.0	0.2	1.42e-02	6.98e-05
614	ok	0.24	0.7	0.1	5.7	5.7	2.5	2.5	-304.0	6.1	41.7	3.1	0.2	5.78e-02
628	ok	0.24	0.4	0.1	5.7	5.7	2.5	2.5	-272.2	-44.0	61.0	3.1	0.5	0.1
651	ok	0.24	0.3	3.35e-02	5.7	5.7	2.5	2.5	-65.5	4.6	-1.8	-2.6	-0.5	-0.1
674	ok	0.24	0.1	2.21e-02	5.7	5.7	2.5	2.5	-50.6	11.8	-7.0	-1.9	-0.4	-0.1
697	ok	0.24	7.15e-02	1.81e-02	5.7	5.7	2.5	2.5	-43.5	-6.9	-5.0	-1.2	-0.3	-0.1
720	ok	0.24	3.66e-02	1.79e-02	5.7	5.7	2.5	2.5	-32.2	-5.8	-0.2	-0.6	-0.1	-0.1
754	ok	0.24	3.51e-02	2.12e-02	5.7	5.7	2.5	2.5	-42.0	-11.2	-12.0	0.2	4.65e-03	-4.54e-03
779	ok	0.24	0.1	6.39e-02	5.7	5.7	2.5	2.5	-125.5	0.4	9.6	-1.8	-2.62e-02	-0.2
793	ok	0.24	0.2	7.35e-02	5.7	5.7	2.5	2.5	-124.2	-7.9	25.1	-2.2	-0.4	0.2
816	ok	0.24	0.2	3.20e-02	5.7	5.7	2.5	2.5	-58.8	-29.5	30.8	-1.9	-0.4	0.2
839	ok	0.24	0.1	2.29e-02	5.7	5.7	2.5	2.5	-12.7	-24.0	24.8	-1.4	-0.3	0.2
862	ok	0.24	7.48e-02	1.76e-02	5.7	5.7	2.5	2.5	-37.0	5.3	-12.3	0.9	0.2	-0.2
885	ok	0.24	4.39e-02	1.81e-02	5.7	5.7	2.5	2.5	-36.0	-1.7	-7.4	-6.13e-02	5.50e-03	-0.3
919	ok	0.24	3.15e-02	1.62e-02	5.7	5.7	2.5	2.5	-36.7	1.3	-8.5	-6.02e-02	-1.83e-02	2.16e-03
944	ok	0.24	0.2	4.65e-02	5.7	5.7	2.5	2.5	-116.9	-2.7	2.1	-1.8	-0.3	0.7
969	ok	0.24	0.2	4.71e-02	5.7	5.7	2.5	2.5	-116.8	-3.5	7.3	-2.1	-0.4	0.7

1014	ok	0.24	0.1	2.98e-02	5.7	5.7	2.5	2.5	-58.4	-9.2	30.4	-1.9	-0.4	0.1
1059	ok	0.24	0.1	2.07e-02	5.7	5.7	2.5	2.5	-15.5	-9.7	27.7	-1.4	-0.3	6.58e-02
1104	ok	0.24	5.29e-02	1.77e-02	5.7	5.7	2.5	2.5	-41.2	-1.4	-9.4	0.9	0.2	-7.53e-02
1149	ok	0.24	2.89e-02	1.77e-02	5.7	5.7	2.5	2.5	-28.9	-2.5	-11.2	0.4	8.64e-02	6.49e-02
1194	ok	0.24	1.94e-02	1.38e-02	5.7	5.7	2.5	2.5	-33.4	-0.9	-6.4	1.53e-02	9.96e-03	7.67e-02
1219	ok	0.24	8.92e-02	2.95e-02	5.7	5.7	2.5	2.5	-68.4	0.7	1.8	-0.1	-0.4	2.72e-02
1233	ok	0.24	0.1	3.29e-02	5.7	5.7	2.5	2.5	-64.5	2.2	1.6	-0.1	-0.4	-2.98e-02
1256	ok	0.24	0.1	2.48e-02	5.7	5.7	2.5	2.5	-51.0	-10.2	18.6	1.9	0.4	0.2
1279	ok	0.24	9.37e-02	1.75e-02	5.7	5.7	2.5	2.5	-21.2	-7.9	18.4	1.4	0.3	0.2
1302	ok	0.24	5.65e-02	1.41e-02	5.7	5.7	2.5	2.5	-31.9	-1.8	-8.1	0.9	0.2	0.2
1325	ok	0.24	3.17e-02	1.33e-02	5.7	5.7	2.5	2.5	-29.7	-0.3	-9.3	0.4	9.00e-02	0.2
1359	ok	0.24	1.91e-02	1.29e-02	5.7	5.7	2.5	2.5	-30.9	0.3	-6.7	1.41e-02	4.97e-03	0.2
1384	ok	0.24	9.11e-02	2.56e-02	5.7	5.7	2.5	2.5	-64.2	-0.9	9.83e-02	6.34e-02	0.4	1.76e-02
1398	ok	0.24	0.1	2.70e-02	5.7	5.7	2.5	2.5	-65.9	-1.9	1.6	5.28e-03	0.4	-3.74e-02
1421	ok	0.24	0.1	2.32e-02	5.7	5.7	2.5	2.5	-43.3	-6.4	14.5	-1.9	-0.4	0.2
1444	ok	0.24	7.95e-02	1.76e-02	5.7	5.7	2.5	2.5	-27.2	-5.7	15.6	-1.4	-0.3	0.2
1467	ok	0.24	5.74e-02	1.39e-02	5.7	5.7	2.5	2.5	-25.7	-1.2	-10.0	-0.9	-0.2	0.2
1490	ok	0.24	4.11e-02	1.26e-02	5.7	5.7	2.5	2.5	-25.1	1.74e-02	-10.7	-0.4	-0.1	0.2
1524	ok	0.24	2.52e-02	1.13e-02	5.7	5.7	2.5	2.5	-24.0	0.9	-6.8	-2.34e-02	2.45e-02	0.2
1549	ok	0.24	0.2	2.65e-02	5.7	5.7	2.5	2.5	-56.6	-0.9	-0.6	-7.26e-03	-3.02e-03	9.47e-03
1574	ok	0.24	0.2	2.74e-02	5.7	5.7	2.5	2.5	-55.3	-6.0	2.4	1.10e-03	-5.21e-04	1.43e-03
1619	ok	0.24	0.1	2.12e-02	5.7	5.7	2.5	2.5	-42.2	-6.4	12.0	-1.9	-0.4	7.84e-02
1664	ok	0.24	8.91e-02	1.77e-02	5.7	5.7	2.5	2.5	-27.9	-4.4	17.2	-1.4	-0.3	4.82e-02
1709	ok	0.24	6.54e-02	1.42e-02	5.7	5.7	2.5	2.5	-27.4	-2.8	-11.1	-0.9	-0.2	6.41e-02
1754	ok	0.24	4.56e-02	1.24e-02	5.7	5.7	2.5	2.5	-26.4	-2.1	-8.1	-0.4	-8.95e-02	5.81e-02
1799	ok	0.24	2.76e-02	9.51e-03	5.7	5.7	2.5	2.5	-22.9	-2.0	-4.5	-2.51e-02	6.38e-03	7.49e-02
1824	ok	0.24	9.57e-02	1.97e-02	5.7	5.7	2.5	2.5	-40.1	-0.3	0.5	-7.06e-03	4.31e-04	-3.82e-06
1838	ok	0.24	0.1	2.11e-02	5.7	5.7	2.5	2.5	-42.7	-1.9	-2.3	-8.82e-03	1.27e-03	3.07e-03
1861	ok	0.24	0.1	1.72e-02	5.7	5.7	2.5	2.5	-31.2	-2.7	10.6	-1.95e-02	-3.31e-03	-7.17e-06
1884	ok	0.24	9.95e-02	1.31e-02	5.7	5.7	2.5	2.5	-21.2	-3.4	11.3	-2.28e-02	-2.54e-03	4.84e-04
1907	ok	0.24	7.19e-02	1.00e-02	5.7	5.7	2.5	2.5	-18.0	-1.6	-8.5	2.14e-02	3.14e-03	-1.64e-03
1930	ok	0.24	4.83e-02	8.99e-03	5.7	5.7	2.5	2.5	-16.3	-0.8	-8.3	-1.05e-02	8.52e-04	0.2
1964	ok	0.24	3.65e-02	8.63e-03	5.7	5.7	2.5	2.5	-16.4	0.2	-6.5	-3.48e-05	1.54e-03	0.2
1989	ok	0.24	8.64e-02	1.83e-02	5.7	5.7	2.5	2.5	-37.0	0.2	1.2	1.23e-02	-4.77e-04	-9.94e-04
2003	ok	0.24	0.1	1.94e-02	5.7	5.7	2.5	2.5	-39.4	-1.1	0.4	7.18e-03	8.37e-04	-1.73e-03
2026	ok	0.24	0.1	1.60e-02	5.7	5.7	2.5	2.5	-27.5	-1.1	9.2	1.70e-02	4.26e-03	7.43e-04
2049	ok	0.24	9.38e-02	1.23e-02	5.7	5.7	2.5	2.5	-19.8	-1.4	12.3	1.16e-02	3.95e-03	-4.27e-04
2072	ok	0.24	6.78e-02	9.91e-03	5.7	5.7	2.5	2.5	-14.8	-1.0	11.5	1.12e-02	2.33e-03	1.93e-03
2095	ok	0.24	4.23e-02	8.17e-03	5.7	5.7	2.5	2.5	-14.4	0.4	-6.6	-0.4	-6.01e-02	0.2
2129	ok	0.24	3.81e-02	7.06e-03	5.7	5.7	2.5	2.5	-15.6	0.5	-6.0	3.02e-03	2.47e-02	0.2
2154	ok	0.24	0.2	1.90e-02	5.7	5.7	2.5	2.5	-38.4	-0.5	-1.8	8.80e-03	1.24e-03	9.54e-04
2179	ok	0.24	0.2	2.08e-02	5.7	5.7	2.5	2.5	-33.9	-4.5	-9.7	-3.22e-02	-3.94e-03	-2.08e-03
2224	ok	0.24	0.1	1.42e-02	5.7	5.7	2.5	2.5	-28.4	-4.3	-3.2	2.12e-02	4.54e-03	-8.20e-04
2269	ok	0.24	9.62e-02	1.18e-02	5.7	5.7	2.5	2.5	-18.4	-1.0	13.7	2.95e-02	8.35e-03	-7.67e-04
2314	ok	0.24	6.88e-02	1.02e-02	5.7	5.7	2.5	2.5	-6.9	-0.5	5.3	0.7	0.1	6.93e-02
2359	ok	0.24	4.44e-02	8.29e-03	5.7	5.7	2.5	2.5	-16.1	-1.6	-7.4	-0.4	-7.98e-02	6.22e-02
2404	ok	0.24	3.29e-02	5.21e-03	5.7	5.7	2.5	2.5	-11.9	-0.9	-3.7	-1.72e-02	3.20e-03	7.46e-02
2434	ok	0.24	0.1	2.28e-02	5.7	5.7	2.5	2.5	-57.4	-2.3	0.3	-1.4	-0.5	-0.1
2448	ok	0.24	0.1	2.61e-02	5.7	5.7	2.5	2.5	-36.1	-4.6	-11.4	2.0	0.4	0.3
2471	ok	0.24	0.1	1.32e-02	5.7	5.7	2.5	2.5	-8.8	-11.2	-8.8	1.7	0.4	0.3
2494	ok	0.24	0.1	7.05e-03	5.7	5.7	2.5	2.5	-11.0	5.5	12.1	-2.04e-03	1.01e-03	1.21e-03
2517	ok	0.24	8.29e-02	6.18e-03	5.7	5.7	2.5	2.5	-7.7	-0.9	7.0	0.7	0.2	0.2
2540	ok	0.24	5.00e-02	4.54e-03	5.7	5.7	2.5	2.5	-2.8	-0.7	6.9	0.3	8.55e-02	0.2
2574	ok	0.24	2.99e-02	3.69e-03	5.7	5.7	2.5	2.5	-5.5	0.5	-1.9	-5.99e-02	-5.51e-03	0.2
2752	ok	0.24	0.7	7.54e-02	5.7	5.7	2.5	2.5	-77.1	3.3	-3.5	-1.2	0.3	0.3
2766	ok	0.24	0.3	5.05e-02	5.7	5.7	2.5	2.5	-72.4	6.0	-4.8	-1.4	0.3	0.3
2789	ok	0.24	0.3	1.67e-02	5.7	5.7	2.5	2.5	-34.8	0.6	-3.8	-2.8	-0.6	-3.42e-02
2812	ok	0.24	0.2	7.54e-03	5.7	5.7	2.5	2.5	0.3	8.2	1.3	-1.8	-0.4	-6.06e-03
2835	ok	0.24	7.75e-02	6.19e-03	5.7	5.7	2.5	2.5	-10.0	0.8	5.6	8.10e-03	1.42e-03	-1.65e-03
2858	ok	0.24	3.65e-02	4.34e-03	5.7	5.7	2.5	2.5	-2.8	1.6	-2.5	0.4	6.41e-02	-0.1
2892	ok	0.24	3.00e-02	2.91e-03	5.7	5.7	2.5	2.5	-5.5	0.3	-1.8	-5.35e-02	9.39e-03	0.2
3032	ok	0.24	0.4	0.1	5.7	5.7	2.5	2.5	-294.9	-75.5	-75.2	-2.31e-02	-2.60e-03	-2.93e-03
3079	ok	0.24	0.4	5.84e-02	5.7	5.7	2.5	2.5	-76.7	-19.3	-29.8	-7.36e-03	-1.34e-03	-1.75e-03
3126	ok	0.24	0.3	1.62e-02	5.7	5.7	2.5	2.5	32.3	15.1	6.0	2.8	0.6	0.2
3173	ok	0.24	0.2	6.52e-03	5.7	5.7	2.5	2.5	-2.4	-0.2	2.7	-1.8	-0.4	-0.1
3220	ok	0.24	9.37e-02	6.58e-03	5.7	5.7	2.5	2.5	-9.4	1.5	7.3	1.48e-02	3.10e-03	1.65e-03
3267	ok	0.24	4.22e-02	4.82e-03	5.7	5.7	2.5	2.5	-5.7	0.8	-3.7	0.4	0.2	6.83e-02
3314	ok	0.24	1.77e-02	1.37e-03	5.7	5.7	2.5	2.5	-0.1	0.7	3.5	-0.1	2.07e-03	-5.17e-03

Nodo	**x/d**	**V N/M**	**ver. rid**	**Af pr-**	**Af pr+**	**Af sec-**	**Af sec+**	**N z**	**N o**	**N zo**	**M z**	**M o**	**M zo**
								-489.05	-82.21	-75.21	-2.76	-0.57	-0.26
	0.24	0.75	0.20	5.65	5.65	2.51	2.51	32.31	15.09	91.27	3.14	0.62	0.73

Nodo	**Stato**	**Max tau**	**Ver V pr**	**Ver V sec**	**Af V pr**	**Af V sec**	**V pr**	**V sec**
		kN/ m2					kN/ m	kN/ m
259	ok	1.86						
306	ok	1.82						

353	ok	1.15
400	ok	0.76
447	ok	0.53
494	ok	0.35
541	ok	0.58
614	ok	2.54
628	ok	1.37
651	ok	1.16
674	ok	0.90
697	ok	0.56
720	ok	0.44
754	ok	0.62
779	ok	2.53
793	ok	1.33
816	ok	1.14
839	ok	0.89
862	ok	0.54
885	ok	0.34
919	ok	0.38
944	ok	0.86
969	ok	1.32
1014	ok	1.13
1059	ok	0.76
1104	ok	0.53
1149	ok	0.29
1194	ok	0.35
1219	ok	2.48
1233	ok	1.29
1256	ok	1.15
1279	ok	0.88
1302	ok	0.55
1325	ok	0.33
1359	ok	0.29
1384	ok	2.48
1398	ok	1.28
1421	ok	1.14
1444	ok	0.88
1467	ok	0.53
1490	ok	0.34
1524	ok	0.33
1549	ok	0.49
1574	ok	1.26
1619	ok	1.13
1664	ok	0.75
1709	ok	0.54
1754	ok	0.30
1799	ok	0.30
1824	ok	2.44
1838	ok	1.28
1861	ok	1.15
1884	ok	0.88
1907	ok	0.56
1930	ok	0.32
1964	ok	0.30
1989	ok	2.44
2003	ok	1.23
2026	ok	1.13
2049	ok	0.88
2072	ok	0.53
2095	ok	0.33
2129	ok	0.30
2154	ok	1.34
2179	ok	1.52
2224	ok	1.16
2269	ok	0.75
2314	ok	0.51
2359	ok	0.29
2404	ok	0.31
2434	ok	2.47
2448	ok	1.62
2471	ok	1.16
2494	ok	0.77
2517	ok	0.44
2540	ok	0.26
2574	ok	0.33
2752	ok	2.47
2766	ok	1.81
2789	ok	1.07

2812	ok	0.83
2835	ok	0.42
2858	ok	0.26
2892	ok	0.43
3032	ok	2.28
3079	ok	2.02
3126	ok	1.10
3173	ok	0.70
3220	ok	0.42
3267	ok	0.25
3314	ok	0.43

Nodo	Max tau	Ver V pr	Ver V sec	Af V pr	Af V sec	V pr	V sec
	2.54						

Macro Setto	Spessore	Id Materiale	Id Criterio	Progettazione
	cm			
5	15.00	1	1	Singolo elemento NON DISSIPATIVO

Nodo	Stato	x/d	V N/M	ver. rid	Af pr-	Af pr+	Af sec-	Af sec+	N z	N o	N zo	M z	M o	M zo
									kN/ m	kN/ m	kN/ m	kN	kN	kN
271	ok	0.24	0.4	0.2	5.7	5.7	2.5	2.5	-496.3	-84.7	93.7	-0.3	-1.05e-03	7.74e-03
318	ok	0.24	0.3	0.1	5.7	5.7	2.5	2.5	-325.9	-63.9	97.7	-0.3	-2.01e-02	1.16e-02
365	ok	0.24	0.3	3.41e-02	5.7	5.7	2.5	2.5	-66.8	-16.2	1.0	-2.7	-0.6	4.26e-02
412	ok	0.24	0.2	2.56e-02	5.7	5.7	2.5	2.5	-55.2	-13.4	-20.4	-2.1	-0.5	4.19e-02
459	ok	0.24	0.1	1.97e-02	5.7	5.7	2.5	2.5	-44.2	-7.6	6.4	-1.4	-0.3	4.92e-02
506	ok	0.24	7.69e-02	1.95e-02	5.7	5.7	2.5	2.5	-26.5	-3.8	2.0	-0.7	-0.2	5.96e-02
553	ok	0.24	4.56e-02	2.61e-02	5.7	5.7	2.5	2.5	-44.8	-12.4	-18.6	-0.1	2.93e-02	3.19e-02
615	ok	0.24	0.8	0.1	5.7	5.7	2.5	2.5	-320.3	4.5	46.7	-0.1	-1.43e-03	-3.37e-03
634	ok	0.24	0.5	0.1	5.7	5.7	2.5	2.5	-282.1	-46.6	63.3	-0.1	-2.77e-03	-9.52e-03
657	ok	0.24	0.3	3.45e-02	5.7	5.7	2.5	2.5	-68.3	5.7	-4.4	-2.5	-0.5	-0.1
680	ok	0.24	0.1	2.30e-02	5.7	5.7	2.5	2.5	-53.0	12.5	-9.2	-1.9	-0.4	-0.1
703	ok	0.24	7.29e-02	1.83e-02	5.7	5.7	2.5	2.5	-45.3	-6.9	-4.5	-1.3	-0.3	-0.1
726	ok	0.24	4.00e-02	1.79e-02	5.7	5.7	2.5	2.5	-33.3	-4.1	0.2	-0.6	-0.1	-0.1
766	ok	0.24	4.36e-02	2.12e-02	5.7	5.7	2.5	2.5	-43.6	-11.7	-11.6	1.18e-02	0.1	-0.2
780	ok	0.24	0.1	6.65e-02	5.7	5.7	2.5	2.5	-166.2	-3.2	-11.1	4.24e-02	-3.90e-03	1.26e-03
799	ok	0.24	0.2	7.65e-02	5.7	5.7	2.5	2.5	-181.7	-22.3	40.4	5.39e-02	5.59e-03	-1.56e-02
822	ok	0.24	0.2	3.32e-02	5.7	5.7	2.5	2.5	-61.3	-30.5	32.0	6.92e-02	1.62e-02	-1.36e-02
845	ok	0.24	0.1	2.40e-02	5.7	5.7	2.5	2.5	-40.6	3.6	-8.9	1.4	0.3	-0.2
868	ok	0.24	7.71e-02	1.82e-02	5.7	5.7	2.5	2.5	-41.0	-3.9	-6.9	0.9	0.2	-0.2
891	ok	0.24	4.82e-02	1.82e-02	5.7	5.7	2.5	2.5	-36.6	-1.2	-9.0	0.4	9.36e-02	-0.2
931	ok	0.24	3.72e-02	1.63e-02	5.7	5.7	2.5	2.5	-38.4	0.3	-8.3	9.68e-03	-4.44e-03	-0.2
945	ok	0.24	0.2	4.83e-02	5.7	5.7	2.5	2.5	-121.2	-3.0	2.5	0.1	6.50e-03	8.59e-03
981	ok	0.24	0.2	4.90e-02	5.7	5.7	2.5	2.5	-119.0	-17.1	19.7	0.2	3.64e-02	-1.02e-02
1026	ok	0.24	0.1	3.05e-02	5.7	5.7	2.5	2.5	-60.8	-16.2	28.3	0.2	4.62e-02	-4.40e-03
1071	ok	0.24	9.87e-02	2.15e-02	5.7	5.7	2.5	2.5	-46.3	-2.0	-9.3	1.5	0.3	-6.69e-02
1116	ok	0.24	5.23e-02	1.80e-02	5.7	5.7	2.5	2.5	-43.7	-3.7	-7.3	1.0	0.2	-7.75e-02
1161	ok	0.24	3.32e-02	1.78e-02	5.7	5.7	2.5	2.5	-29.9	-2.5	-11.4	-0.5	-0.1	-6.58e-02
1206	ok	0.24	2.33e-02	1.42e-02	5.7	5.7	2.5	2.5	-34.3	-0.7	-3.2	8.27e-02	1.43e-02	-7.20e-02
1220	ok	0.24	9.08e-02	3.06e-02	5.7	5.7	2.5	2.5	-77.0	-1.0	-1.6	-9.46e-02	4.05e-03	-8.18e-03
1239	ok	0.24	0.1	3.41e-02	5.7	5.7	2.5	2.5	-83.9	-3.8	11.7	-3.77e-02	8.39e-03	-8.62e-03
1262	ok	0.24	0.1	2.46e-02	5.7	5.7	2.5	2.5	-52.8	-10.6	19.5	-4.97e-02	-1.06e-02	-1.00e-02
1285	ok	0.24	8.87e-02	1.74e-02	5.7	5.7	2.5	2.5	-28.2	-8.3	18.2	-4.15e-02	-1.04e-02	-1.03e-02
1308	ok	0.24	5.19e-02	1.47e-02	5.7	5.7	2.5	2.5	-33.2	-1.6	-8.6	-0.9	-0.2	-0.2
1331	ok	0.24	3.24e-02	1.37e-02	5.7	5.7	2.5	2.5	-30.8	-0.2	-9.7	-0.4	-9.03e-02	-0.2
1371	ok	0.24	2.09e-02	1.33e-02	5.7	5.7	2.5	2.5	-28.9	0.2	-7.9	-5.98e-03	7.75e-03	-0.2
1385	ok	0.24	8.90e-02	2.64e-02	5.7	5.7	2.5	2.5	-66.4	-1.0	0.2	6.45e-02	3.81e-04	3.59e-04
1404	ok	0.24	0.1	2.73e-02	5.7	5.7	2.5	2.5	-67.6	-3.2	7.9	9.02e-02	1.01e-02	-7.37e-03
1427	ok	0.24	0.1	2.30e-02	5.7	5.7	2.5	2.5	-49.3	-7.6	16.2	8.12e-02	1.66e-02	-8.82e-03
1450	ok	0.24	8.06e-02	1.76e-02	5.7	5.7	2.5	2.5	-29.5	-8.5	13.7	7.69e-02	1.17e-02	-1.33e-02
1473	ok	0.24	5.88e-02	1.40e-02	5.7	5.7	2.5	2.5	-27.0	-1.1	-10.5	0.9	0.2	-0.2
1496	ok	0.24	4.25e-02	1.31e-02	5.7	5.7	2.5	2.5	-26.1	5.01e-02	-11.2	0.4	9.87e-02	-0.2
1536	ok	0.24	2.39e-02	1.16e-02	5.7	5.7	2.5	2.5	-27.4	0.6	-6.8	3.62e-03	-2.73e-02	-0.2
1550	ok	0.24	0.1	2.63e-02	5.7	5.7	2.5	2.5	-58.4	-1.0	-0.6	6.82e-02	3.37e-03	1.75e-02
1586	ok	0.24	0.2	2.73e-02	5.7	5.7	2.5	2.5	-39.2	1.5	6.0	-0.3	-2.46e-02	-0.1
1631	ok	0.24	0.1	2.11e-02	5.7	5.7	2.5	2.5	-31.9	-3.2	9.6	-0.2	-5.40e-02	-6.17e-03
1676	ok	0.24	8.64e-02	1.76e-02	5.7	5.7	2.5	2.5	-29.1	-5.7	12.5	0.2	3.85e-02	-3.07e-03
1721	ok	0.24	6.45e-02	1.42e-02	5.7	5.7	2.5	2.5	-28.6	-2.9	-11.6	1.0	0.2	-6.56e-02
1766	ok	0.24	4.49e-02	1.26e-02	5.7	5.7	2.5	2.5	-27.3	-2.3	-8.6	0.5	0.1	-6.16e-02
1811	ok	0.24	3.01e-02	9.78e-03	5.7	5.7	2.5	2.5	-23.5	-2.2	-4.7	8.85e-02	1.68e-03	-6.92e-02
1825	ok	0.24	9.79e-02	1.97e-02	5.7	5.7	2.5	2.5	-34.5	0.3	-1.1	-0.2	2.55e-03	-1.12e-02
1844	ok	0.24	0.1	2.11e-02	5.7	5.7	2.5	2.5	-42.0	-0.3	5.3	-7.04e-02	3.44e-03	-1.13e-02
1867	ok	0.24	0.1	1.72e-02	5.7	5.7	2.5	2.5	-32.4	-2.9	11.0	-7.57e-02	-1.51e-02	-1.28e-02

1890	ok	0.24	9.25e-02	1.30e-02	5.7	5.7	2.5	2.5	-22.2	-3.6	11.8	-6.47e-02	-1.15e-02	-1.26e-02
1913	ok	0.24	6.79e-02	1.00e-02	5.7	5.7	2.5	2.5	-18.8	-1.8	-8.8	-0.9	-0.2	-0.2
1936	ok	0.24	4.58e-02	9.33e-03	5.7	5.7	2.5	2.5	-19.5	-1.4	-8.8	-0.4	-8.49e-02	-0.2
1976	ok	0.24	3.38e-02	8.84e-03	5.7	5.7	2.5	2.5	-16.8	0.2	-6.7	-7.27e-03	-9.90e-04	-0.2
1990	ok	0.24	8.39e-02	1.83e-02	5.7	5.7	2.5	2.5	-37.1	0.2	1.2	0.2	-6.53e-03	-1.27e-02
2009	ok	0.24	0.1	1.95e-02	5.7	5.7	2.5	2.5	-33.0	-0.9	-6.3	1.9	0.3	-0.1
2032	ok	0.24	0.1	1.60e-02	5.7	5.7	2.5	2.5	-19.8	-2.4	-4.8	1.8	0.3	-0.2
2055	ok	0.24	9.28e-02	1.22e-02	5.7	5.7	2.5	2.5	-20.7	-1.5	12.6	7.23e-02	1.47e-02	-1.45e-02
2078	ok	0.24	6.83e-02	9.87e-03	5.7	5.7	2.5	2.5	-17.4	-2.2	-8.5	6.44e-02	3.08e-02	-0.2
2101	ok	0.24	4.14e-02	8.49e-03	5.7	5.7	2.5	2.5	-15.1	0.3	-6.7	0.4	7.62e-02	-0.2
2141	ok	0.24	3.77e-02	7.27e-03	5.7	5.7	2.5	2.5	-16.1	0.4	-6.1	-2.01e-03	-3.88e-02	-0.2
2155	ok	0.24	0.2	1.92e-02	5.7	5.7	2.5	2.5	-38.9	-1.1	-0.5	-1.9	-0.2	-0.7
2191	ok	0.24	0.2	2.10e-02	5.7	5.7	2.5	2.5	-32.2	-0.8	0.8	-2.2	-0.3	-0.8
2236	ok	0.24	0.1	1.43e-02	5.7	5.7	2.5	2.5	-17.9	-3.7	-3.4	2.0	0.4	-0.2
2281	ok	0.24	0.1	1.17e-02	5.7	5.7	2.5	2.5	-14.0	-1.0	5.7	-1.3	-0.3	-8.94e-02
2326	ok	0.24	7.33e-02	1.01e-02	5.7	5.7	2.5	2.5	-7.2	0.7	10.0	-0.8	-0.2	-7.90e-02
2371	ok	0.24	4.56e-02	8.30e-03	5.7	5.7	2.5	2.5	-16.7	-2.0	-7.5	0.5	0.1	-6.29e-02
2416	ok	0.24	3.42e-02	5.42e-03	5.7	5.7	2.5	2.5	-12.4	-1.2	-3.7	7.73e-02	-1.04e-02	-7.14e-02
2435	ok	0.24	0.1	2.39e-02	5.7	5.7	2.5	2.5	-37.5	1.1	-2.6	-1.8	-0.2	0.1
2454	ok	0.24	0.1	2.73e-02	5.7	5.7	2.5	2.5	-39.0	-4.8	-11.5	-2.0	-0.4	-0.3
2477	ok	0.24	0.1	1.36e-02	5.7	5.7	2.5	2.5	-13.2	-11.7	-8.7	-1.7	-0.4	-0.3
2500	ok	0.24	0.1	7.23e-03	5.7	5.7	2.5	2.5	-12.9	-0.2	8.1	-1.2	-0.3	-0.3
2523	ok	0.24	8.50e-02	6.12e-03	5.7	5.7	2.5	2.5	-8.0	1.8	9.2	-0.7	-0.2	-0.2
2546	ok	0.24	5.33e-02	4.56e-03	5.7	5.7	2.5	2.5	-3.4	-0.9	7.3	-0.3	-8.42e-02	-0.2
2586	ok	0.24	3.21e-02	3.87e-03	5.7	5.7	2.5	2.5	-6.3	0.6	-1.5	4.08e-02	-7.63e-03	-0.2
2753	ok	0.24	0.7	7.83e-02	5.7	5.7	2.5	2.5	133.0	42.7	68.2	0.2	-1.16e-02	-2.33e-02
2772	ok	0.24	0.3	5.36e-02	5.7	5.7	2.5	2.5	-89.2	-31.6	-36.2	0.3	3.26e-02	1.53e-02
2795	ok	0.24	0.3	1.71e-02	5.7	5.7	2.5	2.5	-17.9	2.8	5.9	1.1	0.2	-9.69e-02
2818	ok	0.24	0.2	7.95e-03	5.7	5.7	2.5	2.5	-9.8	7.1	9.0	0.6	0.1	-0.1
2841	ok	0.24	7.65e-02	6.13e-03	5.7	5.7	2.5	2.5	-7.8	-1.09e-02	6.7	0.3	4.07e-02	-0.2
2864	ok	0.24	3.87e-02	4.38e-03	5.7	5.7	2.5	2.5	-4.3	-0.4	6.7	0.1	9.68e-03	-0.2
2904	ok	0.24	3.33e-02	3.09e-03	5.7	5.7	2.5	2.5	-3.1	-2.2	4.7	-0.1	-7.86e-02	-0.2
3044	ok	0.24	0.4	0.1	5.7	5.7	2.5	2.5	-313.7	-80.3	-80.3	0.6	1.19e-02	6.03e-02
3091	ok	0.24	0.4	6.17e-02	5.7	5.7	2.5	2.5	-80.5	-20.8	-31.7	0.5	6.57e-02	4.67e-02
3138	ok	0.24	0.3	1.65e-02	5.7	5.7	2.5	2.5	34.2	15.5	6.0	0.3	6.08e-02	2.84e-02
3185	ok	0.24	0.2	6.36e-03	5.7	5.7	2.5	2.5	-8.5	2.7	1.9	0.3	5.40e-02	2.31e-02
3232	ok	0.24	0.1	6.50e-03	5.7	5.7	2.5	2.5	-5.7	0.7	4.5	1.1	0.2	0.1
3279	ok	0.24	4.54e-02	4.82e-03	5.7	5.7	2.5	2.5	-6.2	-1.00e-02	6.9	0.4	8.34e-02	7.33e-02
3326	ok	0.24	1.97e-02	2.40e-03	5.7	5.7	2.5	2.5	-2.2	-0.3	4.4	-8.41e-02	2.64e-02	5.55e-03

Nodo	**x/d**	**V N/M**	**ver. rid**	**Af pr-**	**Af pr+**	**Af sec-**	**Af sec+**	**N z**	**N o**	**N zo**	**M z**	**M o**	**M zo**
								-496.33	-84.75	-80.29	-2.72	-0.58	-0.81
	0.24	0.75	0.21	5.65	5.65	2.51	2.51	133.02	42.73	97.75	2.02	0.43	0.15

Nodo	**Stato**	**Max tau**	**Ver V pr**	**Ver V sec**	**Af V pr**	**Af V sec**	**V pr**	**V sec**
		kN/ m2					kN/ m	kN/ m
271	ok	1.80						
318	ok	1.78						
365	ok	1.15						
412	ok	0.76						
459	ok	0.53						
506	ok	0.35						
553	ok	0.62						
615	ok	2.51						
634	ok	1.36						
657	ok	1.16						
680	ok	0.89						
703	ok	0.56						
726	ok	0.44						
766	ok	0.57						
780	ok	2.50						
799	ok	1.32						
822	ok	1.13						
845	ok	0.88						
868	ok	0.53						
891	ok	0.34						
931	ok	0.37						
945	ok	0.89						
981	ok	1.32						
1026	ok	1.12						
1071	ok	0.76						
1116	ok	0.53						
1161	ok	0.29						
1206	ok	0.37						
1220	ok	2.43						
1239	ok	1.27						
1262	ok	1.14						

1285	ok	0.87
1308	ok	0.55
1331	ok	0.33
1371	ok	0.32
1385	ok	2.43
1404	ok	1.26
1427	ok	1.12
1450	ok	0.87
1473	ok	0.53
1496	ok	0.35
1536	ok	0.31
1550	ok	0.54
1586	ok	1.26
1631	ok	1.12
1676	ok	0.75
1721	ok	0.53
1766	ok	0.29
1811	ok	0.34
1825	ok	2.39
1844	ok	1.26
1867	ok	1.13
1890	ok	0.87
1913	ok	0.55
1936	ok	0.32
1976	ok	0.32
1990	ok	2.39
2009	ok	1.21
2032	ok	1.11
2055	ok	0.86
2078	ok	0.53
2101	ok	0.34
2141	ok	0.32
2155	ok	1.37
2191	ok	1.56
2236	ok	1.17
2281	ok	0.75
2326	ok	0.51
2371	ok	0.29
2416	ok	0.33
2435	ok	2.53
2454	ok	1.64
2477	ok	1.17
2500	ok	0.77
2523	ok	0.44
2546	ok	0.26
2586	ok	0.34
2753	ok	2.51
2772	ok	1.85
2795	ok	1.09
2818	ok	0.83
2841	ok	0.43
2864	ok	0.26
2904	ok	0.43
3044	ok	2.32
3091	ok	2.06
3138	ok	1.11
3185	ok	0.71
3232	ok	0.42
3279	ok	0.25
3326	ok	0.43

Nodo	Max tau	Ver V pr	Ver V sec	Af V pr	Af V sec	V pr	V sec
	2.53						

Macro Setto	Spessore	Id Materiale	Id Criterio	Progettazione
	cm			
6	15.00	1	1	Singolo elemento NON DISSIPATIVO

Nodo	Stato	x/d	V N/M	ver. rid	Af pr-	Af pr+	Af sec-	Af sec+	N z	N o	N zo	M z	M o	M zo
									kN/ m	kN/ m	kN/ m	kN	kN	kN
281	ok	0.24	0.5	0.2	5.7	5.7	2.5	2.5	-432.4	-81.6	88.0	2.5	7.07e-02	-0.1
328	ok	0.24	0.5	0.1	5.7	5.7	2.5	2.5	-266.9	-53.9	79.5	2.4	0.4	-0.1
375	ok	0.24	0.3	3.92e-02	5.7	5.7	2.5	2.5	-71.5	-16.0	-2.7	-2.6	-0.6	4.56e-05

422	ok	0.24	0.2	2.85e-02	5.7	5.7	2.5	2.5	-62.8	-13.4	-21.5	-2.1	-0.5	8.81e-03
469	ok	0.24	0.1	2.24e-02	5.7	5.7	2.5	2.5	-41.9	-10.8	19.2	0.2	1.65e-02	-1.80e-02
516	ok	0.24	0.1	2.38e-02	5.7	5.7	2.5	2.5	-50.1	-8.0	-16.8	-1.3	-0.3	1.73e-02
563	ok	0.24	0.1	5.67e-02	5.7	5.7	2.5	2.5	-125.2	-22.2	-37.8	-1.5	-0.1	-2.12e-03
616	ok	0.24	0.8	0.1	5.7	5.7	2.5	2.5	-307.7	-0.5	55.2	2.4	0.1	4.14e-02
639	ok	0.24	0.5	0.1	5.7	5.7	2.5	2.5	-257.2	-48.1	61.6	2.5	0.4	9.24e-02
662	ok	0.24	0.3	3.78e-02	5.7	5.7	2.5	2.5	-70.4	11.7	-10.0	-2.3	-0.5	-0.1
685	ok	0.24	0.1	2.55e-02	5.7	5.7	2.5	2.5	-58.7	15.6	-11.1	-1.8	-0.4	-0.1
708	ok	0.24	7.69e-02	2.23e-02	5.7	5.7	2.5	2.5	-52.7	-10.3	-11.6	-1.3	-0.3	-0.1
731	ok	0.24	6.85e-02	2.64e-02	5.7	5.7	2.5	2.5	-44.1	-14.8	-32.1	-1.2	-0.3	-0.1
776	ok	0.24	0.1	4.05e-02	5.7	5.7	2.5	2.5	-81.0	-8.9	-20.4	6.76e-02	0.3	-0.3
781	ok	0.24	0.2	5.87e-02	5.7	5.7	2.5	2.5	-146.6	-4.8	-9.4	0.7	0.3	1.36e-02
804	ok	0.24	0.3	6.90e-02	5.7	5.7	2.5	2.5	-161.1	-23.1	41.0	0.7	0.1	0.3
827	ok	0.24	0.2	2.99e-02	5.7	5.7	2.5	2.5	-45.6	-28.8	34.3	-1.0	-0.2	0.2
850	ok	0.24	0.1	2.73e-02	5.7	5.7	2.5	2.5	-46.0	5.3	-17.3	0.9	0.2	-0.2
873	ok	0.24	8.43e-02	2.24e-02	5.7	5.7	2.5	2.5	-43.0	-7.4	-23.4	1.0	0.2	-0.4
896	ok	0.24	7.91e-02	2.49e-02	5.7	5.7	2.5	2.5	-49.2	-3.2	-22.8	0.5	9.84e-02	-0.4
941	ok	0.24	9.98e-02	2.86e-02	5.7	5.7	2.5	2.5	-65.6	-1.9	-16.4	0.1	0.1	-0.4
946	ok	0.24	0.1	4.20e-02	5.7	5.7	2.5	2.5	-105.4	-2.8	2.5	4.72e-02	7.85e-03	3.74e-02
991	ok	0.24	0.2	4.29e-02	5.7	5.7	2.5	2.5	-75.6	-9.5	15.0	0.5	0.1	0.1
1036	ok	0.24	0.2	2.62e-02	5.7	5.7	2.5	2.5	-44.5	-15.3	31.1	-0.7	-0.2	0.1
1081	ok	0.24	9.14e-02	2.50e-02	5.7	5.7	2.5	2.5	-50.0	1.2	-18.3	1.2	0.2	-0.1
1126	ok	0.24	9.18e-02	2.29e-02	5.7	5.7	2.5	2.5	-44.8	-3.4	-23.8	1.3	0.3	-0.2
1171	ok	0.24	6.76e-02	2.30e-02	5.7	5.7	2.5	2.5	-46.6	-1.6	-20.6	0.7	0.1	-0.2
1216	ok	0.24	7.75e-02	2.33e-02	5.7	5.7	2.5	2.5	-44.9	-2.8	20.4	-0.2	6.23e-03	0.2
1221	ok	0.24	6.18e-02	2.78e-02	5.7	5.7	2.5	2.5	-69.9	-1.3	-0.8	-0.2	1.45e-03	-1.65e-02
1244	ok	0.24	9.74e-02	3.01e-02	5.7	5.7	2.5	2.5	-71.7	-5.0	14.2	0.8	0.2	0.1
1267	ok	0.24	0.1	2.36e-02	5.7	5.7	2.5	2.5	-44.7	-10.8	25.0	0.7	0.2	0.2
1290	ok	0.24	9.19e-02	1.80e-02	5.7	5.7	2.5	2.5	-33.3	3.1	-19.9	-0.8	-0.1	-0.2
1313	ok	0.24	8.22e-02	1.95e-02	5.7	5.7	2.5	2.5	-41.1	6.23e-02	-17.1	-0.5	-0.1	-0.2
1336	ok	0.24	8.31e-02	1.98e-02	5.7	5.7	2.5	2.5	-44.9	1.3	-15.4	-0.3	-8.92e-02	-0.2
1381	ok	0.24	7.45e-02	2.00e-02	5.7	5.7	2.5	2.5	-36.3	-1.2	21.6	7.73e-03	6.84e-02	0.3
1386	ok	0.24	4.91e-02	2.30e-02	5.7	5.7	2.5	2.5	-57.8	-1.0	0.5	0.1	-1.27e-03	3.45e-03
1409	ok	0.24	6.78e-02	2.38e-02	5.7	5.7	2.5	2.5	-58.6	-3.3	7.7	0.1	1.86e-02	-6.64e-03
1432	ok	0.24	0.1	2.01e-02	5.7	5.7	2.5	2.5	-38.4	-6.9	21.8	5.78e-02	-4.91e-03	0.1
1455	ok	0.24	9.87e-02	1.74e-02	5.7	5.7	2.5	2.5	-32.6	-0.5	-20.3	1.4	0.3	-0.3
1478	ok	0.24	9.37e-02	1.86e-02	5.7	5.7	2.5	2.5	-33.1	-0.7	-22.0	0.9	0.2	-0.3
1501	ok	0.24	9.18e-02	1.84e-02	5.7	5.7	2.5	2.5	-17.7	0.9	-19.8	0.4	9.16e-02	-0.3
1546	ok	0.24	7.81e-02	1.80e-02	5.7	5.7	2.5	2.5	-33.1	-1.1	22.1	3.77e-02	5.21e-02	0.3
1551	ok	0.24	7.67e-02	1.98e-02	5.7	5.7	2.5	2.5	-48.6	-0.9	1.60e-02	0.1	7.21e-03	2.51e-02
1596	ok	0.24	0.1	2.11e-02	5.7	5.7	2.5	2.5	-37.2	-2.0	5.2	-0.4	-4.85e-02	-3.29e-02
1641	ok	0.24	0.1	1.78e-02	5.7	5.7	2.5	2.5	-27.2	-3.6	16.3	0.6	0.1	8.38e-02
1686	ok	0.24	0.1	1.77e-02	5.7	5.7	2.5	2.5	-32.9	-1.0	-21.6	1.6	0.3	-0.2
1731	ok	0.24	9.30e-02	1.83e-02	5.7	5.7	2.5	2.5	-33.3	-1.0	-22.6	1.2	0.2	-0.2
1776	ok	0.24	7.66e-02	1.67e-02	5.7	5.7	2.5	2.5	-16.7	-0.3	-18.1	0.6	0.1	-0.2
1821	ok	0.24	7.33e-02	1.71e-02	5.7	5.7	2.5	2.5	-26.6	-2.3	19.4	-0.2	1.55e-02	0.2
1826	ok	0.24	5.02e-02	1.58e-02	5.7	5.7	2.5	2.5	-34.0	-0.6	0.2	-5.64e-02	0.3	-5.15e-02
1849	ok	0.24	6.30e-02	1.71e-02	5.7	5.7	2.5	2.5	-30.8	-1.0	-6.5	-0.3	3.15e-02	-0.3
1872	ok	0.24	9.66e-02	1.45e-02	5.7	5.7	2.5	2.5	-26.4	-2.1	16.7	0.9	0.2	0.2
1895	ok	0.24	9.83e-02	1.31e-02	5.7	5.7	2.5	2.5	-14.3	-2.7	18.8	1.2	0.2	0.3
1918	ok	0.24	9.03e-02	1.35e-02	5.7	5.7	2.5	2.5	-22.0	-2.2	16.6	0.7	0.1	0.3
1941	ok	0.24	8.66e-02	1.40e-02	5.7	5.7	2.5	2.5	-23.0	-2.0	18.8	0.3	4.77e-02	0.3
1986	ok	0.24	8.27e-02	1.45e-02	5.7	5.7	2.5	2.5	-21.4	-0.9	20.4	1.67e-02	3.51e-02	0.2
1991	ok	0.24	4.00e-02	1.47e-02	5.7	5.7	2.5	2.5	-36.4	-0.3	-0.3	1.3	-9.69e-02	7.09e-02
2014	ok	0.24	5.08e-02	1.59e-02	5.7	5.7	2.5	2.5	-36.3	-1.3	-7.3	1.6	0.3	-0.3
2037	ok	0.24	8.74e-02	1.48e-02	5.7	5.7	2.5	2.5	-30.2	-3.7	-14.6	1.7	0.4	-0.4
2060	ok	0.24	9.28e-02	1.29e-02	5.7	5.7	2.5	2.5	-21.8	-3.2	-11.9	1.3	0.3	-0.3
2083	ok	0.24	9.15e-02	1.31e-02	5.7	5.7	2.5	2.5	-21.1	-2.86e-02	-17.4	0.9	0.2	-0.3
2106	ok	0.24	8.43e-02	1.36e-02	5.7	5.7	2.5	2.5	-10.2	0.5	-15.2	0.4	9.92e-02	-0.3
2151	ok	0.24	8.48e-02	1.35e-02	5.7	5.7	2.5	2.5	-19.8	-1.3	20.5	4.94e-02	3.60e-02	0.2
2156	ok	0.24	9.32e-02	1.49e-02	5.7	5.7	2.5	2.5	-36.4	-0.5	-1.6	1.3	0.4	-0.6
2201	ok	0.24	0.1	1.64e-02	5.7	5.7	2.5	2.5	-38.9	-0.8	5.62e-02	1.8	0.5	-0.8
2246	ok	0.24	8.81e-02	1.52e-02	5.7	5.7	2.5	2.5	-29.6	-4.1	-4.9	2.0	0.4	-0.3
2291	ok	0.24	9.05e-02	1.32e-02	5.7	5.7	2.5	2.5	-21.4	-4.7	-17.5	1.6	0.3	-0.2
2336	ok	0.24	8.32e-02	1.32e-02	5.7	5.7	2.5	2.5	-21.0	-3.3	-18.2	1.1	0.2	-0.2
2381	ok	0.24	7.76e-02	1.35e-02	5.7	5.7	2.5	2.5	-11.1	0.5	14.3	0.1	3.06e-02	0.2
2426	ok	0.24	7.93e-02	1.29e-02	5.7	5.7	2.5	2.5	-14.4	-0.8	16.5	-7.27e-02	1.74e-02	0.2
2436	ok	0.24	0.1	2.42e-02	5.7	5.7	2.5	2.5	-60.7	-3.5	-5.89e-02	1.2	0.3	2.50e-02
2459	ok	0.24	0.2	2.90e-02	5.7	5.7	2.5	2.5	-64.1	-12.2	-22.0	1.2	0.2	-0.4
2482	ok	0.24	0.1	1.48e-02	5.7	5.7	2.5	2.5	-7.9	-5.2	-9.5	-0.9	-0.2	-0.4
2505	ok	0.24	0.1	8.21e-03	5.7	5.7	2.5	2.5	-7.4	3.7	14.0	1.1	0.2	0.3
2528	ok	0.24	0.1	8.96e-03	5.7	5.7	2.5	2.5	-9.9	4.5	16.0	0.7	0.2	0.3
2551	ok	0.24	9.21e-02	9.16e-03	5.7	5.7	2.5	2.5	-9.3	2.1	17.9	0.2	7.45e-02	0.3
2596	ok	0.24	7.18e-02	1.02e-02	5.7	5.7	2.5	2.5	-9.6	0.3	16.4	7.94e-04	5.71e-02	0.3
2754	ok	0.24	0.7	9.37e-02	5.7	5.7	2.5	2.5	178.1	44.0	80.4	-2.7	-0.3	-0.1
2777	ok	0.24	0.3	5.52e-02	5.7	5.7	2.5	2.5	-89.9	-36.1	-36.9	4.0	0.6	0.2
2800	ok	0.24	0.2	2.04e-02	5.7	5.7	2.5	2.5	45.7	-8.9	-14.7	2.2	0.4	9.20e-02
2823	ok	0.24	0.1	9.10e-03	5.7	5.7	2.5	2.5	-11.4	-6.7	-4.5	2.3	0.4	-7.40e-02

2846	ok	0.24	8.73e-02	6.76e-03	5.7	5.7	2.5	2.5	-3.6	5.8	11.0	-1.0	-0.2	0.1
2869	ok	0.24	7.66e-02	7.70e-03	5.7	5.7	2.5	2.5	-6.1	5.1	12.1	-0.4	-4.51e-02	0.1
2914	ok	0.24	6.80e-02	9.06e-03	5.7	5.7	2.5	2.5	-7.2	-0.3	12.4	0.2	0.1	0.2
3054	ok	0.24	0.5	0.1	5.7	5.7	2.5	2.5	-314.4	-94.5	-88.1	5.6	0.2	0.7
3101	ok	0.24	0.4	6.78e-02	5.7	5.7	2.5	2.5	-84.4	-28.5	-33.6	4.5	0.8	0.5
3148	ok	0.24	0.2	1.99e-02	5.7	5.7	2.5	2.5	46.6	4.8	-13.7	2.3	0.4	0.3
3195	ok	0.24	0.2	7.40e-03	5.7	5.7	2.5	2.5	-12.7	-11.8	-5.6	2.5	0.5	0.2
3242	ok	0.24	0.1	6.62e-03	5.7	5.7	2.5	2.5	-2.8	10.1	9.6	-0.9	-0.2	-3.34e-02
3289	ok	0.24	7.26e-02	5.79e-03	5.7	5.7	2.5	2.5	-5.4	5.0	8.4	-0.3	-5.69e-02	6.89e-03
3336	ok	0.24	4.75e-02	6.77e-03	5.7	5.7	2.5	2.5	-9.4	2.6	11.4	1.41e-02	2.63e-02	6.08e-02

Nodo	**x/d**	**V N/M**	**ver. rid**	**Af pr-**	**Af pr+**	**Af sec-**	**Af sec+**	**N z**	**N o**	**N zo**	**M z**	**M o**	**M zo**
								-432.41	-94.47	-88.15	-2.65	-0.55	-0.83
	0.24	0.79	0.18	5.65	5.65	2.51	2.51	178.13	43.99	88.03	5.64	0.76	0.75

Nodo	**Stato**	**Max tau** kN/ m2	**Ver V pr**	**Ver V sec**	**Af V pr**	**Af V sec**	**V pr** kN/ m	**V sec** kN/ m
281	ok	1.39						
328	ok	1.31						
375	ok	0.88						
422	ok	0.59						
469	ok	0.40						
516	ok	0.42						
563	ok	1.27						
616	ok	1.85						
639	ok	0.98						
662	ok	0.85						
685	ok	0.66						
708	ok	0.42						
731	ok	0.53						
776	ok	0.61						
781	ok	1.82						
804	ok	0.96						
827	ok	0.79						
850	ok	0.65						
873	ok	0.44						
896	ok	0.29						
941	ok	0.28						
946	ok	1.09						
991	ok	0.95						
1036	ok	0.81						
1081	ok	0.57						
1126	ok	0.44						
1171	ok	0.25						
1216	ok	0.39						
1221	ok	1.50						
1244	ok	0.71						
1267	ok	0.62						
1290	ok	0.48						
1313	ok	0.31						
1336	ok	0.25						
1381	ok	0.32						
1386	ok	1.49						
1409	ok	0.71						
1432	ok	0.63						
1455	ok	0.49						
1478	ok	0.31						
1501	ok	0.21						
1546	ok	0.27						
1551	ok	0.55						
1596	ok	0.74						
1641	ok	0.64						
1686	ok	0.44						
1731	ok	0.33						
1776	ok	0.21						
1821	ok	0.35						
1826	ok	1.48						
1849	ok	0.71						
1872	ok	0.63						
1895	ok	0.50						
1918	ok	0.34						
1941	ok	0.23						
1986	ok	0.30						
1991	ok	1.48						
2014	ok	0.67						
2037	ok	0.62						
2060	ok	0.50						

2083	ok	0.32
2106	ok	0.22
2151	ok	0.25
2156	ok	1.28
2201	ok	1.21
2246	ok	0.79
2291	ok	0.48
2336	ok	0.31
2381	ok	0.20
2426	ok	0.30
2436	ok	2.09
2459	ok	1.25
2482	ok	0.80
2505	ok	0.50
2528	ok	0.29
2551	ok	0.17
2596	ok	0.28
2754	ok	2.00
2777	ok	1.62
2800	ok	0.73
2823	ok	0.54
2846	ok	0.27
2869	ok	0.19
2914	ok	0.24
3054	ok	2.07
3101	ok	1.84
3148	ok	0.68
3195	ok	0.46
3242	ok	0.27
3289	ok	0.19
3336	ok	0.27

Nodo	Max tau	Ver V pr	Ver V sec	Af V pr	Af V sec	V pr	V sec
	2.09						

Macro Setto	Spessore	Id Materiale	Id Criterio	Progettazione
	cm			
7	15.00	1	1	Singolo elemento NON DISSIPATIVO

Nodo	Stato	x/d	V N/M	ver. rid	Af pr-	Af pr+	Af sec-	Af sec+	N z	N o	N zo	M z	M o	M zo
									kN/ m	kN/ m	kN/ m	kN	kN	kN
286	ok	0.24	0.4	0.2	5.7	5.7	2.5	2.5	-378.4	-68.4	94.2	-2.7	-0.4	5.35e-02
333	ok	0.24	0.3	3.36e-02	5.7	5.7	2.5	2.5	-70.5	-15.7	1.4	2.6	0.6	-2.32e-02
380	ok	0.24	0.1	2.45e-02	5.7	5.7	2.5	2.5	-52.7	-12.1	-20.0	2.0	0.5	-2.29e-02
427	ok	0.24	0.1	1.84e-02	5.7	5.7	2.5	2.5	-42.6	-8.2	-9.0	1.3	0.2	-3.97e-02
474	ok	0.24	8.85e-02	1.80e-02	5.7	5.7	2.5	2.5	-31.1	-6.7	-6.7	-0.2	-4.06e-02	2.23e-02
521	ok	0.24	5.11e-02	2.54e-02	5.7	5.7	2.5	2.5	-45.1	-12.1	-20.3	0.3	-2.09e-02	-2.79e-02
618	ok	0.24	0.6	0.1	5.7	5.7	2.5	2.5	-321.1	-41.9	57.6	-2.7	-0.5	-0.2
641	ok	0.24	0.3	4.16e-02	5.7	5.7	2.5	2.5	-67.8	8.3	-4.5	2.4	0.5	0.1
664	ok	0.24	0.1	2.24e-02	5.7	5.7	2.5	2.5	-52.1	15.3	-8.1	1.8	0.4	0.2
687	ok	0.24	6.08e-02	1.74e-02	5.7	5.7	2.5	2.5	-42.5	-6.7	-6.4	1.2	0.2	0.1
710	ok	0.24	3.65e-02	1.71e-02	5.7	5.7	2.5	2.5	-28.6	-10.2	-13.5	0.6	0.1	0.1
734	ok	0.24	4.25e-02	2.14e-02	5.7	5.7	2.5	2.5	-43.1	-8.8	-15.6	4.52e-02	-3.96e-02	0.2
783	ok	0.24	0.3	7.80e-02	5.7	5.7	2.5	2.5	-188.9	-21.9	33.2	-0.4	-0.1	-0.3
806	ok	0.24	0.2	3.55e-02	5.7	5.7	2.5	2.5	-55.4	-5.6	45.2	-0.3	-0.1	-0.2
829	ok	0.24	0.1	2.40e-02	5.7	5.7	2.5	2.5	-38.1	5.2	-9.3	-1.3	-0.2	0.2
852	ok	0.24	8.36e-02	1.74e-02	5.7	5.7	2.5	2.5	-39.3	-3.9	-7.7	-0.9	-0.2	0.2
875	ok	0.24	5.21e-02	1.78e-02	5.7	5.7	2.5	2.5	-35.8	-1.5	-10.7	-0.4	-0.1	0.2
899	ok	0.24	4.37e-02	1.75e-02	5.7	5.7	2.5	2.5	-40.6	-5.34e-02	-11.5	5.86e-02	3.77e-02	0.2
949	ok	0.24	0.2	5.01e-02	5.7	5.7	2.5	2.5	-123.6	-16.9	15.0	-0.2	-3.13e-02	-2.01e-02
994	ok	0.24	0.1	3.24e-02	5.7	5.7	2.5	2.5	-68.1	-16.3	27.9	-0.2	-5.16e-02	-3.87e-03
1039	ok	0.24	9.52e-02	2.21e-02	5.7	5.7	2.5	2.5	-43.7	-1.1	-10.0	-1.5	-0.3	6.10e-02
1084	ok	0.24	5.37e-02	1.77e-02	5.7	5.7	2.5	2.5	-30.6	-0.9	-13.3	1.1	0.2	6.61e-02
1129	ok	0.24	4.11e-02	1.78e-02	5.7	5.7	2.5	2.5	-30.6	-0.2	-11.5	0.6	0.1	6.16e-02
1174	ok	0.24	2.99e-02	1.66e-02	5.7	5.7	2.5	2.5	-38.8	-1.4	-10.0	0.2	4.59e-02	5.39e-02
1223	ok	0.24	0.1	3.40e-02	5.7	5.7	2.5	2.5	-84.4	-3.0	8.4	1.80e-02	-2.47e-02	2.08e-02
1246	ok	0.24	9.64e-02	2.58e-02	5.7	5.7	2.5	2.5	-58.2	-10.1	18.0	1.78e-02	-1.36e-03	9.55e-03
1269	ok	0.24	8.45e-02	1.84e-02	5.7	5.7	2.5	2.5	-30.5	-11.3	13.2	7.11e-02	1.53e-02	8.47e-03
1292	ok	0.24	5.34e-02	1.50e-02	5.7	5.7	2.5	2.5	-32.5	-1.5	-11.0	0.9	0.2	0.2
1315	ok	0.24	3.74e-02	1.49e-02	5.7	5.7	2.5	2.5	-33.1	-2.7	-11.8	0.5	0.1	0.2
1339	ok	0.24	2.93e-02	1.56e-02	5.7	5.7	2.5	2.5	-33.4	0.2	-11.2	2.02e-02	-8.10e-05	0.2
1388	ok	0.24	0.1	2.80e-02	5.7	5.7	2.5	2.5	-69.7	-2.8	5.9	-0.2	-1.26e-02	1.07e-02
1411	ok	0.24	9.96e-02	2.38e-02	5.7	5.7	2.5	2.5	-53.7	-7.3	14.4	-0.1	-2.64e-02	9.66e-03

1434	ok	0.24	7.89e-02	1.84e-02	5.7	5.7	2.5	2.5	-31.2	-5.6	16.5	-0.1	-2.12e-02	8.78e-03
1457	ok	0.24	5.85e-02	1.47e-02	5.7	5.7	2.5	2.5	-27.1	-1.2	-13.1	-0.9	-0.2	0.2
1480	ok	0.24	4.98e-02	1.43e-02	5.7	5.7	2.5	2.5	-27.8	-0.6	-10.6	-0.4	-9.64e-02	0.2
1504	ok	0.24	2.80e-02	1.39e-02	5.7	5.7	2.5	2.5	-26.8	1.1	-8.9	2.09e-02	5.72e-02	0.2
1554	ok	0.24	0.1	2.74e-02	5.7	5.7	2.5	2.5	-47.0	-3.6	4.4	0.4	5.02e-02	-1.61e-02
1599	ok	0.24	0.1	2.20e-02	5.7	5.7	2.5	2.5	-36.5	-3.6	7.3	0.3	7.01e-02	1.02e-02
1644	ok	0.24	7.55e-02	1.82e-02	5.7	5.7	2.5	2.5	-24.8	-3.7	11.9	0.3	4.97e-02	1.57e-03
1689	ok	0.24	5.31e-02	1.49e-02	5.7	5.7	2.5	2.5	-28.6	-2.9	-14.3	-1.1	-0.2	6.63e-02
1734	ok	0.24	3.47e-02	1.35e-02	5.7	5.7	2.5	2.5	-29.2	-2.5	-11.2	-0.6	-0.1	5.90e-02
1779	ok	0.24	3.25e-02	1.18e-02	5.7	5.7	2.5	2.5	-25.8	-2.6	-6.2	-0.2	1.18e-03	6.06e-02
1828	ok	0.24	0.1	2.05e-02	5.7	5.7	2.5	2.5	-45.2	7.00e-02	3.3	7.67e-02	-1.83e-02	2.41e-02
1851	ok	0.24	9.59e-02	1.88e-02	5.7	5.7	2.5	2.5	-36.9	-3.2	8.7	6.89e-02	9.83e-03	1.47e-02
1874	ok	0.24	7.30e-02	1.38e-02	5.7	5.7	2.5	2.5	-25.0	-4.4	10.1	5.68e-02	9.55e-03	1.64e-02
1897	ok	0.24	5.40e-02	1.07e-02	5.7	5.7	2.5	2.5	-17.6	-1.8	-11.6	0.1	2.15e-02	2.39e-02
1920	ok	0.24	3.73e-02	1.02e-02	5.7	5.7	2.5	2.5	-20.0	-1.9	-10.6	8.21e-02	2.76e-02	2.58e-02
1944	ok	0.24	2.82e-02	1.07e-02	5.7	5.7	2.5	2.5	-23.6	0.2	-8.9	-9.22e-03	-1.82e-02	2.21e-02
1993	ok	0.24	0.1	2.09e-02	5.7	5.7	2.5	2.5	-40.5	1.3	-1.1	-0.2	1.77e-02	3.31e-02
2016	ok	0.24	0.1	1.78e-02	5.7	5.7	2.5	2.5	-35.0	-3.1	-2.5	-0.2	-5.82e-02	1.52e-02
2039	ok	0.24	8.43e-02	1.28e-02	5.7	5.7	2.5	2.5	-24.4	-4.8	-0.1	-0.1	-3.30e-02	2.42e-02
2062	ok	0.24	6.15e-02	1.01e-02	5.7	5.7	2.5	2.5	-17.7	-2.5	-10.0	-9.87e-02	-3.45e-02	0.2
2085	ok	0.24	3.58e-02	9.26e-03	5.7	5.7	2.5	2.5	-16.5	8.79e-03	-7.7	-0.4	-8.55e-02	0.2
2109	ok	0.24	3.62e-02	8.81e-03	5.7	5.7	2.5	2.5	-14.3	1.2	-6.0	4.18e-02	6.54e-02	0.2
2159	ok	0.24	0.1	2.38e-02	5.7	5.7	2.5	2.5	-36.2	-3.6	-7.8	2.6	0.5	9.87e-02
2204	ok	0.24	0.1	1.71e-02	5.7	5.7	2.5	2.5	-16.1	-3.0	-8.5	2.0	0.4	0.1
2249	ok	0.24	8.19e-02	1.17e-02	5.7	5.7	2.5	2.5	-22.5	-5.7	2.6	-0.4	-8.59e-02	3.40e-03
2294	ok	0.24	6.07e-02	9.83e-03	5.7	5.7	2.5	2.5	-9.7	-2.5	3.8	0.2	4.11e-02	2.48e-03
2339	ok	0.24	3.75e-02	8.82e-03	5.7	5.7	2.5	2.5	-17.7	-1.8	-8.4	-0.5	-0.1	5.57e-02
2384	ok	0.24	3.28e-02	6.63e-03	5.7	5.7	2.5	2.5	-13.6	-1.5	-4.0	-0.1	1.77e-02	6.25e-02
2438	ok	0.24	0.1	2.83e-02	5.7	5.7	2.5	2.5	-48.5	-4.1	-10.3	2.2	0.4	0.3
2461	ok	0.24	0.1	1.84e-02	5.7	5.7	2.5	2.5	-12.0	-7.9	-13.3	1.6	0.3	0.3
2484	ok	0.24	0.1	6.14e-03	5.7	5.7	2.5	2.5	-9.9	-2.9	3.5	-0.4	-5.56e-02	0.3
2507	ok	0.24	7.20e-02	5.54e-03	5.7	5.7	2.5	2.5	-6.8	-1.7	3.7	-0.4	-3.91e-02	0.4
2530	ok	0.24	4.73e-02	4.64e-03	5.7	5.7	2.5	2.5	-5.8	-0.9	4.9	-9.90e-02	-1.83e-02	0.4
2554	ok	0.24	3.36e-02	4.71e-03	5.7	5.7	2.5	2.5	-6.8	0.9	-1.7	-1.79e-02	1.35e-02	0.2
2756	ok	0.24	0.2	6.52e-02	5.7	5.7	2.5	2.5	-146.7	-28.3	-45.8	-4.5	-0.7	-0.1
2779	ok	0.24	0.3	1.53e-02	5.7	5.7	2.5	2.5	35.9	-3.7	10.4	-2.9	-0.6	-2.45e-02
2802	ok	0.24	0.1	8.04e-03	5.7	5.7	2.5	2.5	-4.9	-0.9	6.2	-3.1	-0.5	7.66e-02
2825	ok	0.24	6.80e-02	5.53e-03	5.7	5.7	2.5	2.5	-6.6	-0.4	4.6	-1.7	-0.3	0.1
2848	ok	0.24	3.32e-02	4.33e-03	5.7	5.7	2.5	2.5	-5.7	-0.9	4.8	-0.7	-9.60e-02	0.2
2872	ok	0.24	3.47e-02	3.65e-03	5.7	5.7	2.5	2.5	-6.7	0.3	-1.3	-1.83e-02	7.51e-02	0.2
3059	ok	0.24	0.2	8.82e-02	5.7	5.7	2.5	2.5	-173.3	-43.4	-63.7	-4.9	-0.8	-0.4
3106	ok	0.24	0.4	1.76e-02	5.7	5.7	2.5	2.5	92.7	20.7	5.2	-2.8	-0.5	-0.2
3153	ok	0.24	0.2	5.25e-03	5.7	5.7	2.5	2.5	-6.8	0.8	3.6	-3.2	-0.6	-0.3
3200	ok	0.24	8.86e-02	5.58e-03	5.7	5.7	2.5	2.5	-7.7	-1.1	2.9	-1.9	-0.4	-0.2
3247	ok	0.24	4.00e-02	4.42e-03	5.7	5.7	2.5	2.5	-6.8	-1.5	5.7	-0.7	-0.1	-0.1
3294	ok	0.24	1.65e-02	2.58e-03	5.7	5.7	2.5	2.5	-1.3	-0.4	4.3	-5.17e-02	6.29e-04	-9.72e-03

Nodo	**x/d**	**V N/M**	**ver. rid**	**Af pr-**	**Af pr+**	**Af sec-**	**Af sec+**	**N z**	**N o**	**N zo**	**M z**	**M o**	**M zo**
								-378.43	-68.35	-63.73	-4.92	-0.75	-0.42
	0.24	0.59	0.16	5.65	5.65	2.51	2.51	92.70	20.71	94.21	2.64	0.59	0.42

Nodo	**Stato**	**Max tau** kN/ m2	**Ver V pr**	**Ver V sec**	**Af V pr**	**Af V sec**	**V pr** kN/ m	**V sec** kN/ m
286	ok	1.28						
333	ok	1.11						
380	ok	0.73						
427	ok	0.50						
474	ok	0.31						
521	ok	0.66						
618	ok	1.47						
641	ok	1.06						
664	ok	0.83						
687	ok	0.52						
710	ok	0.38						
734	ok	0.54						
783	ok	1.47						
806	ok	0.98						
829	ok	0.82						
852	ok	0.48						
875	ok	0.34						
899	ok	0.37						
949	ok	1.39						
994	ok	1.04						
1039	ok	0.73						
1084	ok	0.50						
1129	ok	0.28						
1174	ok	0.42						

1223	ok	1.50
1246	ok	1.05
1269	ok	0.83
1292	ok	0.52
1315	ok	0.32
1339	ok	0.31
1388	ok	1.50
1411	ok	1.04
1434	ok	0.83
1457	ok	0.50
1480	ok	0.34
1504	ok	0.33
1554	ok	1.38
1599	ok	1.04
1644	ok	0.73
1689	ok	0.50
1734	ok	0.29
1779	ok	0.38
1828	ok	1.49
1851	ok	1.05
1874	ok	0.82
1897	ok	0.51
1920	ok	0.31
1944	ok	0.33
1993	ok	1.48
2016	ok	1.03
2039	ok	0.82
2062	ok	0.49
2085	ok	0.33
2109	ok	0.31
2159	ok	1.71
2204	ok	1.04
2249	ok	0.72
2294	ok	0.47
2339	ok	0.28
2384	ok	0.35
2438	ok	1.86
2461	ok	1.05
2484	ok	0.73
2507	ok	0.41
2530	ok	0.24
2554	ok	0.34
2756	ok	2.02
2779	ok	1.05
2802	ok	0.78
2825	ok	0.40
2848	ok	0.25
2872	ok	0.38
3059	ok	2.05
3106	ok	1.07
3153	ok	0.70
3200	ok	0.39
3247	ok	0.24
3294	ok	0.38

Nodo	Max tau	Ver V pr	Ver V sec	Af V pr	Af V sec	V pr	V sec
	2.05						

Macro Setto	Spessore	Id Materiale	Id Criterio	Progettazione
	cm			
8	15.00	1	1	Singolo elemento NON DISSIPATIVO

Nodo	Stato	x/d	V N/M	ver. rid	Af pr-	Af pr+	Af sec-	Af sec+	N z	N o	N zo	M z	M o	M zo
									kN/ m	kN/ m	kN/ m	kN	kN	kN
288	ok	0.24	0.3	0.2	5.7	5.7	2.5	2.5	-401.6	-70.3	99.5	0.3	2.07e-02	1.95e-03
335	ok	0.24	0.3	3.23e-02	5.7	5.7	2.5	2.5	-72.8	-16.4	2.6	2.6	0.6	-3.97e-02
382	ok	0.24	0.1	2.49e-02	5.7	5.7	2.5	2.5	-53.5	-12.8	-20.2	2.0	0.5	-3.04e-02
429	ok	0.24	0.1	1.88e-02	5.7	5.7	2.5	2.5	-43.3	-6.8	6.7	1.3	0.3	-4.76e-02
476	ok	0.24	7.77e-02	1.88e-02	5.7	5.7	2.5	2.5	-25.3	-3.2	1.7	0.7	0.2	-5.16e-02
523	ok	0.24	4.68e-02	2.56e-02	5.7	5.7	2.5	2.5	-44.9	-12.2	-18.3	0.2	-4.02e-02	-3.27e-02
619	ok	0.24	0.6	0.1	5.7	5.7	2.5	2.5	-335.2	-41.4	58.4	0.1	-6.09e-04	6.90e-03
642	ok	0.24	0.3	4.57e-02	5.7	5.7	2.5	2.5	-70.8	5.4	-2.7	2.4	0.5	0.1
665	ok	0.24	0.1	2.31e-02	5.7	5.7	2.5	2.5	-54.1	13.6	-8.0	1.8	0.4	0.2

688	ok	0.24	6.91e-02	1.79e-02	5.7	5.7	2.5	2.5	-44.6	-7.0	-3.8	1.2	0.2	0.1
711	ok	0.24	4.59e-02	1.76e-02	5.7	5.7	2.5	2.5	-32.1	-4.4	0.3	0.6	0.1	0.1
736	ok	0.24	4.97e-02	2.11e-02	5.7	5.7	2.5	2.5	-43.6	-11.9	-11.9	-5.03e-02	-0.1	0.2
784	ok	0.24	0.2	8.16e-02	5.7	5.7	2.5	2.5	-198.3	-22.0	33.6	-6.61e-02	-4.39e-03	1.09e-02
807	ok	0.24	0.1	3.73e-02	5.7	5.7	2.5	2.5	-72.0	-30.9	34.6	-7.15e-02	-1.37e-02	6.97e-03
830	ok	0.24	0.1	2.46e-02	5.7	5.7	2.5	2.5	-57.5	0.1	-1.7	0.2	5.20e-02	0.3
853	ok	0.24	7.67e-02	1.81e-02	5.7	5.7	2.5	2.5	-40.8	-4.2	-6.0	-0.8	-0.2	0.2
876	ok	0.24	4.70e-02	1.80e-02	5.7	5.7	2.5	2.5	-36.2	-1.2	-8.7	-0.4	-8.86e-02	0.2
901	ok	0.24	4.05e-02	1.62e-02	5.7	5.7	2.5	2.5	-38.5	8.56e-02	-8.5	-6.12e-03	5.38e-03	0.2
951	ok	0.24	0.2	5.24e-02	5.7	5.7	2.5	2.5	-129.3	-17.3	16.0	-0.3	-3.85e-02	-1.09e-02
996	ok	0.24	0.1	3.40e-02	5.7	5.7	2.5	2.5	-71.0	-17.0	29.9	-0.3	-5.22e-02	4.22e-04
1041	ok	0.24	9.65e-02	2.28e-02	5.7	5.7	2.5	2.5	-46.8	-2.1	-8.0	-1.5	-0.3	6.50e-02
1086	ok	0.24	4.90e-02	1.81e-02	5.7	5.7	2.5	2.5	-31.3	-1.4	-10.9	1.0	0.2	7.01e-02
1131	ok	0.24	3.38e-02	1.77e-02	5.7	5.7	2.5	2.5	-30.1	-2.8	-11.7	0.5	0.1	6.63e-02
1176	ok	0.24	2.66e-02	1.46e-02	5.7	5.7	2.5	2.5	-35.0	-1.3	-7.1	0.1	2.29e-02	6.27e-02
1224	ok	0.24	0.1	3.57e-02	5.7	5.7	2.5	2.5	-88.9	-2.9	8.4	4.20e-02	-1.76e-02	1.62e-02
1247	ok	0.24	9.51e-02	2.78e-02	5.7	5.7	2.5	2.5	-61.3	-10.5	18.8	4.08e-02	6.93e-03	9.92e-03
1270	ok	0.24	8.14e-02	1.92e-02	5.7	5.7	2.5	2.5	-31.9	-12.0	13.8	6.29e-02	1.27e-02	8.54e-03
1293	ok	0.24	4.77e-02	1.49e-02	5.7	5.7	2.5	2.5	-33.4	-1.9	-8.5	0.9	0.2	0.2
1316	ok	0.24	3.12e-02	1.39e-02	5.7	5.7	2.5	2.5	-32.1	-2.9	-9.1	0.4	9.90e-02	0.2
1341	ok	0.24	2.11e-02	1.36e-02	5.7	5.7	2.5	2.5	-29.6	8.29e-02	-8.5	1.82e-02	-1.96e-03	0.2
1389	ok	0.24	0.1	2.96e-02	5.7	5.7	2.5	2.5	-73.7	-2.7	5.9	-0.1	-9.27e-03	1.12e-02
1412	ok	0.24	0.1	2.56e-02	5.7	5.7	2.5	2.5	-56.8	-7.6	14.9	-9.74e-02	-1.87e-02	9.30e-03
1435	ok	0.24	7.32e-02	1.93e-02	5.7	5.7	2.5	2.5	-32.9	-6.0	17.0	-8.55e-02	-1.57e-02	9.35e-03
1458	ok	0.24	5.43e-02	1.48e-02	5.7	5.7	2.5	2.5	-27.5	-1.5	-10.5	-0.9	-0.2	0.2
1481	ok	0.24	4.07e-02	1.33e-02	5.7	5.7	2.5	2.5	-26.5	-0.3	-11.3	-0.4	-9.82e-02	0.2
1506	ok	0.24	2.12e-02	1.20e-02	5.7	5.7	2.5	2.5	-25.4	0.9	-7.5	1.45e-02	5.15e-02	0.2
1556	ok	0.24	0.1	2.97e-02	5.7	5.7	2.5	2.5	-50.9	-3.9	4.2	0.3	4.18e-02	-1.17e-02
1601	ok	0.24	0.1	2.37e-02	5.7	5.7	2.5	2.5	-39.6	-4.0	6.8	0.3	5.88e-02	1.02e-02
1646	ok	0.24	7.60e-02	1.91e-02	5.7	5.7	2.5	2.5	-26.5	-5.5	7.6	0.2	4.12e-02	2.55e-03
1691	ok	0.24	5.09e-02	1.50e-02	5.7	5.7	2.5	2.5	-29.1	-3.3	-11.6	-1.0	-0.2	6.45e-02
1736	ok	0.24	3.44e-02	1.30e-02	5.7	5.7	2.5	2.5	-27.9	-2.7	-8.6	-0.5	-0.1	6.21e-02
1781	ok	0.24	2.92e-02	1.03e-02	5.7	5.7	2.5	2.5	-24.8	-2.4	-4.9	-0.1	5.57e-04	6.16e-02
1829	ok	0.24	0.1	2.28e-02	5.7	5.7	2.5	2.5	-49.1	0.2	2.9	7.25e-02	-1.28e-02	1.96e-02
1852	ok	0.24	9.74e-02	2.05e-02	5.7	5.7	2.5	2.5	-40.0	-3.6	7.7	6.48e-02	1.21e-02	1.35e-02
1875	ok	0.24	7.53e-02	1.45e-02	5.7	5.7	2.5	2.5	-26.5	-5.1	9.0	5.51e-02	1.05e-02	1.37e-02
1898	ok	0.24	5.32e-02	1.08e-02	5.7	5.7	2.5	2.5	-19.3	-2.2	-9.5	0.9	0.2	0.2
1921	ok	0.24	3.56e-02	9.65e-03	5.7	5.7	2.5	2.5	-20.4	-2.0	-8.6	0.4	9.55e-02	0.2
1946	ok	0.24	2.80e-02	9.33e-03	5.7	5.7	2.5	2.5	-21.1	0.2	-7.1	-5.12e-02	-3.92e-03	0.2
1994	ok	0.24	0.1	2.34e-02	5.7	5.7	2.5	2.5	-47.3	7.92e-02	-2.0	-0.1	-8.69e-03	2.62e-02
2017	ok	0.24	0.1	1.96e-02	5.7	5.7	2.5	2.5	-38.7	-3.5	-3.3	-0.1	-3.90e-02	1.59e-02
2040	ok	0.24	8.89e-02	1.35e-02	5.7	5.7	2.5	2.5	-25.7	-5.6	-0.4	-0.1	-2.29e-02	2.15e-02
2063	ok	0.24	6.54e-02	1.02e-02	5.7	5.7	2.5	2.5	-17.9	-2.8	-9.1	-8.11e-02	-3.38e-02	0.2
2086	ok	0.24	3.75e-02	8.75e-03	5.7	5.7	2.5	2.5	-15.8	-0.2	-7.1	-0.4	-8.00e-02	0.2
2111	ok	0.24	3.43e-02	7.65e-03	5.7	5.7	2.5	2.5	-13.7	0.9	-5.7	1.55e-02	6.34e-02	0.2
2161	ok	0.24	0.1	2.67e-02	5.7	5.7	2.5	2.5	-37.3	-2.9	-6.7	2.5	0.5	0.1
2206	ok	0.24	0.1	1.89e-02	5.7	5.7	2.5	2.5	-17.8	-3.4	-8.8	1.9	0.4	0.1
2251	ok	0.24	8.13e-02	1.22e-02	5.7	5.7	2.5	2.5	-23.3	-6.7	2.3	-0.3	-6.39e-02	8.17e-03
2296	ok	0.24	6.31e-02	9.92e-03	5.7	5.7	2.5	2.5	-9.6	-3.1	4.0	0.2	3.21e-02	8.09e-03
2341	ok	0.24	3.89e-02	8.46e-03	5.7	5.7	2.5	2.5	-17.0	-2.0	-7.7	-0.5	-0.1	5.96e-02
2386	ok	0.24	3.27e-02	5.74e-03	5.7	5.7	2.5	2.5	-13.4	-1.4	-3.6	-0.1	1.71e-02	6.51e-02
2439	ok	0.24	0.1	3.15e-02	5.7	5.7	2.5	2.5	-66.2	-4.7	-10.8	-1.4	-0.3	0.4
2462	ok	0.24	0.1	2.29e-02	5.7	5.7	2.5	2.5	-8.2	-10.6	-22.5	-0.9	-0.2	0.3
2485	ok	0.24	0.1	6.14e-03	5.7	5.7	2.5	2.5	-9.2	-3.6	4.2	-0.4	-6.66e-02	0.3
2508	ok	0.24	7.88e-02	5.80e-03	5.7	5.7	2.5	2.5	-6.6	-1.6	4.5	-0.4	-4.63e-02	0.4
2531	ok	0.24	5.12e-02	4.63e-03	5.7	5.7	2.5	2.5	-5.6	-0.6	5.5	-0.1	-1.58e-02	0.4
2556	ok	0.24	3.37e-02	4.11e-03	5.7	5.7	2.5	2.5	-9.2	0.3	-3.3	-1.76e-02	-5.44e-03	2.07e-02
2757	ok	0.24	0.2	7.72e-02	5.7	5.7	2.5	2.5	-148.8	-25.2	-48.7	-0.4	-3.11e-02	-4.22e-03
2780	ok	0.24	0.3	1.99e-02	5.7	5.7	2.5	2.5	31.2	-2.1	10.7	-2.9	-0.6	-2.03e-02
2803	ok	0.24	0.1	7.15e-03	5.7	5.7	2.5	2.5	-4.1	0.9	7.3	-3.2	-0.6	6.93e-02
2826	ok	0.24	7.18e-02	5.95e-03	5.7	5.7	2.5	2.5	-6.6	0.7	5.0	-1.8	-0.3	0.1
2849	ok	0.24	3.57e-02	4.44e-03	5.7	5.7	2.5	2.5	-5.6	0.2	4.9	-0.7	-0.1	0.2
2874	ok	0.24	3.52e-02	3.43e-03	5.7	5.7	2.5	2.5	-4.6	-1.7	4.4	0.2	0.2	0.3
3061	ok	0.24	0.2	0.1	5.7	5.7	2.5	2.5	-185.3	-43.9	-83.5	-0.7	-6.99e-02	-8.52e-02
3108	ok	0.24	0.5	1.42e-02	5.7	5.7	2.5	2.5	24.3	18.1	2.4	-3.0	-0.7	-0.2
3155	ok	0.24	0.2	4.70e-03	5.7	5.7	2.5	2.5	-1.9	6.9	13.1	-2.0	-0.5	-0.2
3202	ok	0.24	9.98e-02	6.00e-03	5.7	5.7	2.5	2.5	-5.8	1.8	4.3	-1.1	-0.2	-0.1
3249	ok	0.24	4.68e-02	4.63e-03	5.7	5.7	2.5	2.5	-6.4	-0.7	1.0	-0.8	-0.3	-0.1
3296	ok	0.24	1.61e-02	2.71e-03	5.7	5.7	2.5	2.5	-3.7	-0.7	4.2	0.1	-1.79e-02	-1.15e-02

Nodo	**x/d**	**V N/M**	**ver. rid**	**Af pr-**	**Af pr+**	**Af sec-**	**Af sec+**	**N z**	**N o**	**N zo**	**M z**	**M o**	**M zo**
								-401.61	-70.26	-83.52	-3.24	-0.67	-0.23
	0.24	0.56	0.17	5.65	5.65	2.51	2.51	31.20	18.12	99.46	2.63	0.59	0.43

Nodo	**Stato**	**Max tau**	**Ver V pr**	**Ver V sec**	**Af V pr**	**Af V sec**	**V pr**	**V sec**
		kN/ m2					kN/ m	kN/ m
288	ok	1.34						

335	ok	1.14
382	ok	0.74
429	ok	0.50
476	ok	0.33
523	ok	0.63
619	ok	1.52
642	ok	1.10
665	ok	0.85
688	ok	0.53
711	ok	0.41
736	ok	0.51
784	ok	1.53
807	ok	1.01
830	ok	0.84
853	ok	0.50
876	ok	0.32
901	ok	0.38
951	ok	1.38
996	ok	1.04
1041	ok	0.74
1086	ok	0.50
1131	ok	0.28
1176	ok	0.40
1224	ok	1.49
1247	ok	1.05
1270	ok	0.83
1293	ok	0.52
1316	ok	0.32
1341	ok	0.32
1389	ok	1.49
1412	ok	1.04
1435	ok	0.83
1458	ok	0.50
1481	ok	0.34
1506	ok	0.34
1556	ok	1.37
1601	ok	1.04
1646	ok	0.74
1691	ok	0.51
1736	ok	0.29
1781	ok	0.37
1829	ok	1.48
1852	ok	1.05
1875	ok	0.83
1898	ok	0.53
1921	ok	0.31
1946	ok	0.33
1994	ok	1.48
2017	ok	1.03
2040	ok	0.83
2063	ok	0.50
2086	ok	0.34
2111	ok	0.32
2161	ok	1.71
2206	ok	1.06
2251	ok	0.73
2296	ok	0.48
2341	ok	0.28
2386	ok	0.36
2439	ok	1.88
2462	ok	1.06
2485	ok	0.75
2508	ok	0.42
2531	ok	0.25
2556	ok	0.35
2757	ok	1.98
2780	ok	1.06
2803	ok	0.81
2826	ok	0.41
2849	ok	0.26
2874	ok	0.41
3061	ok	1.99
3108	ok	1.11
3155	ok	0.72
3202	ok	0.40
3249	ok	0.25
3296	ok	0.42

Nodo	Max tau	Ver V pr	Ver V sec	Af V pr	Af V sec	V pr	V sec
	1.99						

Macro Setto	Spessore	Id Materiale	Id Criterio	Progettazione
	cm			
9	15.00	1	1	Singolo elemento NON DISSIPATIVO

Nodo	Stato	x/d	V N/M	ver. rid	Af pr-	Af pr+	Af sec-	Af sec+	N z	N o	N zo	M z	M o	M zo
									kN/ m	kN/ m	kN/ m	kN	kN	kN
290	ok	0.24	0.3	0.2	5.7	5.7	2.5	2.5	-395.9	-69.1	98.3	0.5	3.64e-02	-3.14e-02
337	ok	0.24	0.3	3.18e-02	5.7	5.7	2.5	2.5	-71.9	-16.3	2.4	2.7	0.6	-5.25e-02
384	ok	0.24	0.2	2.49e-02	5.7	5.7	2.5	2.5	-53.2	-12.9	-20.4	2.0	0.5	-3.44e-02
431	ok	0.24	0.1	1.91e-02	5.7	5.7	2.5	2.5	-43.8	-7.1	6.6	1.3	0.3	-5.11e-02
478	ok	0.24	7.74e-02	1.92e-02	5.7	5.7	2.5	2.5	-34.1	-6.6	-8.9	0.7	0.1	-4.83e-02
525	ok	0.24	4.64e-02	2.59e-02	5.7	5.7	2.5	2.5	-45.2	-12.3	-18.4	0.2	-3.66e-02	-3.37e-02
620	ok	0.24	0.5	0.1	5.7	5.7	2.5	2.5	-330.6	-41.2	57.9	0.2	4.97e-03	1.45e-02
643	ok	0.24	0.3	4.47e-02	5.7	5.7	2.5	2.5	-70.1	4.8	-3.0	2.5	0.5	0.1
666	ok	0.24	0.1	2.30e-02	5.7	5.7	2.5	2.5	-53.9	13.0	-8.3	1.9	0.4	0.2
689	ok	0.24	7.29e-02	1.81e-02	5.7	5.7	2.5	2.5	-45.0	-7.1	-4.0	1.2	0.2	0.1
712	ok	0.24	4.43e-02	1.78e-02	5.7	5.7	2.5	2.5	-32.8	-4.4	0.3	0.6	0.1	0.1
738	ok	0.24	4.69e-02	2.13e-02	5.7	5.7	2.5	2.5	-43.7	-11.7	-11.9	-3.46e-02	-0.1	0.2
785	ok	0.24	0.2	8.03e-02	5.7	5.7	2.5	2.5	-195.1	-21.8	33.2	-5.78e-02	-3.03e-03	2.34e-02
808	ok	0.24	0.1	3.64e-02	5.7	5.7	2.5	2.5	-70.0	-30.7	33.7	-7.31e-02	-1.58e-02	1.69e-02
831	ok	0.24	0.1	2.45e-02	5.7	5.7	2.5	2.5	-40.5	3.5	-7.7	-1.3	-0.3	0.2
854	ok	0.24	7.60e-02	1.82e-02	5.7	5.7	2.5	2.5	-40.9	-4.2	-6.3	-0.9	-0.2	0.2
877	ok	0.24	4.87e-02	1.81e-02	5.7	5.7	2.5	2.5	-36.4	-1.2	-8.8	-0.4	-9.02e-02	0.2
903	ok	0.24	4.02e-02	1.62e-02	5.7	5.7	2.5	2.5	-38.6	0.2	-8.5	-1.16e-02	-2.16e-03	0.2
953	ok	0.24	0.2	5.16e-02	5.7	5.7	2.5	2.5	-127.2	-17.1	15.6	-0.3	-4.12e-02	-5.57e-03
998	ok	0.24	0.1	3.32e-02	5.7	5.7	2.5	2.5	-69.2	-16.7	29.1	-0.3	-5.01e-02	2.67e-03
1043	ok	0.24	9.62e-02	2.24e-02	5.7	5.7	2.5	2.5	-46.9	-2.2	-8.1	-1.5	-0.3	6.40e-02
1088	ok	0.24	5.02e-02	1.81e-02	5.7	5.7	2.5	2.5	-31.6	-1.4	-10.5	1.0	0.2	6.72e-02
1133	ok	0.24	3.29e-02	1.78e-02	5.7	5.7	2.5	2.5	-30.1	-2.8	-11.3	0.5	0.1	6.35e-02
1178	ok	0.24	2.52e-02	1.43e-02	5.7	5.7	2.5	2.5	-34.5	-1.2	-6.5	0.1	9.93e-03	6.50e-02
1225	ok	0.24	0.1	3.50e-02	5.7	5.7	2.5	2.5	-87.0	-2.8	8.3	4.41e-02	-1.52e-02	1.28e-02
1248	ok	0.24	9.75e-02	2.75e-02	5.7	5.7	2.5	2.5	-59.6	-10.4	18.5	4.28e-02	1.04e-02	9.05e-03
1271	ok	0.24	8.39e-02	1.90e-02	5.7	5.7	2.5	2.5	-31.5	-10.9	11.2	1.3	0.3	0.2
1294	ok	0.24	4.92e-02	1.48e-02	5.7	5.7	2.5	2.5	-33.6	-1.9	-8.1	0.9	0.2	0.2
1317	ok	0.24	3.00e-02	1.38e-02	5.7	5.7	2.5	2.5	-32.1	-2.8	-8.6	0.4	9.56e-02	0.2
1343	ok	0.24	2.07e-02	1.33e-02	5.7	5.7	2.5	2.5	-32.0	3.48e-02	-6.9	-1.89e-02	-2.26e-02	0.2
1390	ok	0.24	0.1	2.89e-02	5.7	5.7	2.5	2.5	-72.0	-2.7	5.8	-0.1	-7.37e-03	1.03e-02
1413	ok	0.24	0.1	2.53e-02	5.7	5.7	2.5	2.5	-55.2	-7.5	14.7	-8.61e-02	-1.43e-02	8.15e-03
1436	ok	0.24	7.70e-02	1.91e-02	5.7	5.7	2.5	2.5	-32.3	-5.9	16.8	-7.52e-02	-1.23e-02	8.90e-03
1459	ok	0.24	5.66e-02	1.47e-02	5.7	5.7	2.5	2.5	-27.5	-1.4	-10.1	-0.9	-0.2	0.2
1482	ok	0.24	3.93e-02	1.31e-02	5.7	5.7	2.5	2.5	-26.4	-0.2	-10.8	-0.4	-9.73e-02	0.2
1508	ok	0.24	2.00e-02	1.17e-02	5.7	5.7	2.5	2.5	-27.7	0.5	-6.6	-3.10e-03	2.61e-02	0.2
1558	ok	0.24	0.1	2.95e-02	5.7	5.7	2.5	2.5	-50.3	-3.8	3.8	2.4	0.5	3.69e-03
1603	ok	0.24	0.1	2.33e-02	5.7	5.7	2.5	2.5	-38.3	-3.8	6.5	2.0	0.4	7.99e-02
1648	ok	0.24	7.67e-02	1.89e-02	5.7	5.7	2.5	2.5	-25.6	-5.3	7.8	0.2	3.62e-02	2.53e-03
1693	ok	0.24	5.34e-02	1.48e-02	5.7	5.7	2.5	2.5	-29.1	-3.3	-11.1	-1.0	-0.2	6.37e-02
1738	ok	0.24	3.61e-02	1.28e-02	5.7	5.7	2.5	2.5	-27.7	-2.6	-8.1	-0.5	-0.1	6.14e-02
1783	ok	0.24	2.87e-02	9.93e-03	5.7	5.7	2.5	2.5	-24.0	-2.3	-4.4	-0.1	-5.79e-03	6.36e-02
1830	ok	0.24	0.1	2.23e-02	5.7	5.7	2.5	2.5	-48.1	0.2	2.4	2.2	0.3	0.1
1853	ok	0.24	0.1	2.01e-02	5.7	5.7	2.5	2.5	-39.7	-2.1	4.9	1.8	0.3	0.2
1876	ok	0.24	8.09e-02	1.43e-02	5.7	5.7	2.5	2.5	-25.5	-4.8	9.2	4.97e-02	1.03e-02	1.17e-02
1899	ok	0.24	5.74e-02	1.06e-02	5.7	5.7	2.5	2.5	-19.4	-2.2	-8.9	0.9	0.2	0.2
1922	ok	0.24	3.77e-02	9.38e-03	5.7	5.7	2.5	2.5	-20.1	-1.9	-8.0	0.4	9.41e-02	0.2
1948	ok	0.24	2.83e-02	8.93e-03	5.7	5.7	2.5	2.5	-20.4	0.2	-6.5	-5.77e-02	-1.11e-02	0.2
1995	ok	0.24	0.1	2.27e-02	5.7	5.7	2.5	2.5	-45.9	5.74e-02	-2.0	-0.1	-7.10e-03	2.35e-02
2018	ok	0.24	0.1	1.90e-02	5.7	5.7	2.5	2.5	-37.5	-3.4	-2.6	-0.1	-2.83e-02	1.56e-02
2041	ok	0.24	9.10e-02	1.32e-02	5.7	5.7	2.5	2.5	-22.2	-4.3	7.3	-1.3	-0.3	0.2
2064	ok	0.24	6.71e-02	1.00e-02	5.7	5.7	2.5	2.5	-15.8	-2.6	9.3	-0.9	-0.2	0.2
2087	ok	0.24	3.88e-02	8.50e-03	5.7	5.7	2.5	2.5	-15.6	-0.1	-6.5	-0.4	-7.50e-02	0.2
2113	ok	0.24	3.40e-02	7.30e-03	5.7	5.7	2.5	2.5	-16.4	0.4	-5.8	3.26e-03	4.22e-02	0.2
2163	ok	0.24	0.1	2.57e-02	5.7	5.7	2.5	2.5	-37.7	-3.2	-7.1	2.5	0.5	0.1
2208	ok	0.24	0.1	1.81e-02	5.7	5.7	2.5	2.5	-17.5	-3.1	-8.2	1.9	0.4	0.1
2253	ok	0.24	8.34e-02	1.19e-02	5.7	5.7	2.5	2.5	-21.2	-3.8	5.8	-1.5	-0.3	6.31e-02
2298	ok	0.24	6.50e-02	9.98e-03	5.7	5.7	2.5	2.5	-15.9	-2.1	11.7	-1.0	-0.2	7.07e-02
2343	ok	0.24	3.98e-02	8.32e-03	5.7	5.7	2.5	2.5	-16.9	-1.8	-7.1	-0.5	-0.1	6.08e-02
2388	ok	0.24	3.28e-02	5.48e-03	5.7	5.7	2.5	2.5	-12.9	-1.3	-3.2	-0.1	1.06e-02	6.63e-02
2440	ok	0.24	0.1	2.89e-02	5.7	5.7	2.5	2.5	-66.9	-6.3	-12.1	-1.5	-0.3	0.4
2463	ok	0.24	0.1	2.03e-02	5.7	5.7	2.5	2.5	-12.7	-8.4	-13.3	1.7	0.3	0.3
2486	ok	0.24	0.1	6.10e-03	5.7	5.7	2.5	2.5	-9.4	-3.0	4.4	-0.5	-7.43e-02	0.3
2509	ok	0.24	8.00e-02	5.93e-03	5.7	5.7	2.5	2.5	-6.5	-1.4	4.6	-0.4	-4.79e-02	0.4

2532	ok	0.24	5.20e-02	4.62e-03	5.7	5.7	2.5	2.5	-3.6	-1.1	7.0	0.3	8.25e-02	0.2
2558	ok	0.24	3.35e-02	3.89e-03	5.7	5.7	2.5	2.5	-9.3	0.5	-2.0	-3.87e-02	6.32e-04	0.2
2758	ok	0.24	0.3	6.91e-02	5.7	5.7	2.5	2.5	-145.5	-24.3	-45.9	-4.6	-0.7	-8.70e-02
2781	ok	0.24	0.3	1.75e-02	5.7	5.7	2.5	2.5	32.7	-1.6	10.9	-2.9	-0.6	-1.41e-02
2804	ok	0.24	0.1	7.51e-03	5.7	5.7	2.5	2.5	-5.5	1.5	5.5	-3.3	-0.6	7.00e-02
2827	ok	0.24	7.37e-02	6.05e-03	5.7	5.7	2.5	2.5	-7.6	-8.09e-02	5.2	-0.5	-7.12e-02	0.3
2850	ok	0.24	3.66e-02	4.45e-03	5.7	5.7	2.5	2.5	-6.4	-0.4	5.2	-0.2	-3.02e-02	0.3
2876	ok	0.24	3.47e-02	3.30e-03	5.7	5.7	2.5	2.5	-4.5	-1.8	4.2	0.2	0.1	0.3
3063	ok	0.24	0.2	0.1	5.7	5.7	2.5	2.5	-174.5	-40.6	-66.2	-4.6	-0.8	-0.4
3110	ok	0.24	0.5	1.53e-02	5.7	5.7	2.5	2.5	27.7	18.7	3.4	-3.0	-0.7	-0.2
3157	ok	0.24	0.2	5.05e-03	5.7	5.7	2.5	2.5	-3.0	7.2	13.2	-2.0	-0.5	-0.2
3204	ok	0.24	0.1	6.16e-03	5.7	5.7	2.5	2.5	-8.6	1.9	7.1	-0.2	-4.36e-02	-1.97e-02
3251	ok	0.24	4.79e-02	4.71e-03	5.7	5.7	2.5	2.5	-6.4	-0.8	1.0	-0.8	-0.3	-0.1
3298	ok	0.24	1.59e-02	2.61e-03	5.7	5.7	2.5	2.5	-3.7	-0.7	3.9	0.1	-2.22e-02	-1.25e-02

Nodo	**x/d**	**V N/M**	**ver. rid**	**Af pr-**	**Af pr+**	**Af sec-**	**Af sec+**	**N z**	**N o**	**N zo**	**M z**	**M o**	**M zo**
								-395.90	-69.10	-66.22	-4.62	-0.78	-0.40
	0.24	0.55	0.17	5.65	5.65	2.51	2.51	32.75	18.68	98.35	2.69	0.60	0.43

Nodo	**Stato**	**Max tau**	**Ver V pr**	**Ver V sec**	**Af V pr**	**Af V sec**	**V pr**	**V sec**
		kN/ m2					kN/ m	kN/ m
290	ok	1.43						
337	ok	1.17						
384	ok	0.76						
431	ok	0.51						
478	ok	0.34						
525	ok	0.62						
620	ok	1.58						
643	ok	1.14						
666	ok	0.87						
689	ok	0.54						
712	ok	0.43						
738	ok	0.53						
785	ok	1.58						
808	ok	1.04						
831	ok	0.87						
854	ok	0.51						
877	ok	0.32						
903	ok	0.35						
953	ok	1.41						
998	ok	1.06						
1043	ok	0.75						
1088	ok	0.51						
1133	ok	0.28						
1178	ok	0.38						
1225	ok	1.52						
1248	ok	1.07						
1271	ok	0.85						
1294	ok	0.53						
1317	ok	0.33						
1343	ok	0.32						
1390	ok	1.52						
1413	ok	1.06						
1436	ok	0.85						
1459	ok	0.51						
1482	ok	0.34						
1508	ok	0.34						
1558	ok	1.38						
1603	ok	1.06						
1648	ok	0.75						
1693	ok	0.52						
1738	ok	0.29						
1783	ok	0.36						
1830	ok	1.50						
1853	ok	1.07						
1876	ok	0.84						
1899	ok	0.54						
1922	ok	0.32						
1948	ok	0.33						
1995	ok	1.50						
2018	ok	1.05						
2041	ok	0.84						
2064	ok	0.51						
2087	ok	0.34						
2113	ok	0.31						
2163	ok	1.69						
2208	ok	1.07						

2253	ok	0.74
2298	ok	0.49
2343	ok	0.29
2388	ok	0.36
2440	ok	1.88
2463	ok	1.07
2486	ok	0.76
2509	ok	0.43
2532	ok	0.25
2558	ok	0.35
2758	ok	1.95
2781	ok	1.07
2804	ok	0.82
2827	ok	0.42
2850	ok	0.26
2876	ok	0.42
3063	ok	1.93
3110	ok	1.14
3157	ok	0.73
3204	ok	0.41
3251	ok	0.25
3298	ok	0.43

Nodo	Max tau	Ver V pr	Ver V sec	Af V pr	Af V sec	V pr	V sec
	1.95						

Macro Setto	Spessore	Id Materiale	Id Criterio	Progettazione
	cm			
10	15.00	1	1	Singolo elemento NON DISSIPATIVO

Nodo	Stato	x/d	V N/M	ver. rid	Af pr-	Af pr+	Af sec-	Af sec+	N z	N o	N zo	M z	M o	M zo
									kN/ m	kN/ m	kN/ m	kN	kN	kN
292	ok	0.24	0.3	0.2	5.7	5.7	2.5	2.5	-371.3	-64.9	92.3	0.5	3.75e-02	-4.05e-02
339	ok	0.24	0.3	3.22e-02	5.7	5.7	2.5	2.5	-70.3	-16.2	1.5	2.7	0.6	-5.55e-02
386	ok	0.24	0.2	2.50e-02	5.7	5.7	2.5	2.5	-53.5	-13.2	-20.5	2.0	0.5	-3.45e-02
433	ok	0.24	0.1	1.96e-02	5.7	5.7	2.5	2.5	-43.9	-7.4	6.5	1.3	0.3	-5.23e-02
480	ok	0.24	7.61e-02	1.94e-02	5.7	5.7	2.5	2.5	-26.3	-3.6	1.8	0.7	0.2	-5.75e-02
527	ok	0.24	4.60e-02	2.60e-02	5.7	5.7	2.5	2.5	-45.0	-12.4	-18.5	0.1	-3.30e-02	-3.17e-02
621	ok	0.24	0.5	0.1	5.7	5.7	2.5	2.5	-313.7	-40.5	55.6	0.2	5.22e-03	1.38e-02
644	ok	0.24	0.3	4.05e-02	5.7	5.7	2.5	2.5	-68.5	5.5	-4.4	2.5	0.5	0.1
667	ok	0.24	0.1	2.28e-02	5.7	5.7	2.5	2.5	-53.4	12.9	-8.7	1.9	0.4	0.2
690	ok	0.24	7.30e-02	1.81e-02	5.7	5.7	2.5	2.5	-45.0	-6.9	-4.2	1.2	0.3	0.1
713	ok	0.24	4.18e-02	1.79e-02	5.7	5.7	2.5	2.5	-33.0	-4.3	0.3	0.6	0.1	0.1
740	ok	0.24	4.53e-02	2.12e-02	5.7	5.7	2.5	2.5	-43.7	-11.7	-11.7	-2.01e-02	-0.1	0.2
786	ok	0.24	0.2	7.61e-02	5.7	5.7	2.5	2.5	-184.6	-21.3	32.0	-4.53e-02	-2.65e-03	2.36e-02
809	ok	0.24	0.2	3.39e-02	5.7	5.7	2.5	2.5	-65.2	-29.2	31.3	-5.56e-02	-1.37e-02	1.88e-02
832	ok	0.24	0.1	2.43e-02	5.7	5.7	2.5	2.5	-40.1	3.7	-8.4	-1.4	-0.3	0.2
855	ok	0.24	7.61e-02	1.81e-02	5.7	5.7	2.5	2.5	-40.9	-4.0	-6.6	-0.9	-0.2	0.2
878	ok	0.24	4.88e-02	1.82e-02	5.7	5.7	2.5	2.5	-36.5	-1.2	-8.8	-0.4	-9.31e-02	0.2
905	ok	0.24	3.79e-02	1.63e-02	5.7	5.7	2.5	2.5	-38.6	0.2	-8.4	-1.17e-02	-1.71e-03	0.2
955	ok	0.24	0.2	4.88e-02	5.7	5.7	2.5	2.5	-120.3	-16.5	14.8	-0.3	-3.43e-02	3.19e-04
1000	ok	0.24	0.1	3.09e-02	5.7	5.7	2.5	2.5	-64.5	-15.9	27.0	-0.2	-4.39e-02	6.10e-03
1045	ok	0.24	9.43e-02	2.13e-02	5.7	5.7	2.5	2.5	-45.9	-1.9	-8.9	-1.5	-0.3	6.40e-02
1090	ok	0.24	5.09e-02	1.80e-02	5.7	5.7	2.5	2.5	-31.3	-1.2	-10.6	1.0	0.2	6.72e-02
1135	ok	0.24	3.39e-02	1.78e-02	5.7	5.7	2.5	2.5	-30.0	-2.6	-11.2	0.5	0.1	6.25e-02
1180	ok	0.24	2.41e-02	1.42e-02	5.7	5.7	2.5	2.5	-34.5	-0.7	-3.3	-8.63e-02	-2.07e-02	6.77e-02
1226	ok	0.24	0.1	3.28e-02	5.7	5.7	2.5	2.5	-81.6	-2.7	8.1	1.06e-02	-1.80e-02	1.09e-02
1249	ok	0.24	0.1	2.57e-02	5.7	5.7	2.5	2.5	-55.2	-9.9	17.9	2.09e-02	5.65e-03	7.36e-03
1272	ok	0.24	8.62e-02	1.80e-02	5.7	5.7	2.5	2.5	-29.1	-7.8	16.7	4.22e-02	1.15e-02	6.48e-03
1295	ok	0.24	5.01e-02	1.47e-02	5.7	5.7	2.5	2.5	-33.2	-1.7	-8.3	0.9	0.2	0.2
1318	ok	0.24	3.04e-02	1.37e-02	5.7	5.7	2.5	2.5	-30.9	-0.4	-9.4	0.4	8.94e-02	0.2
1345	ok	0.24	2.06e-02	1.33e-02	5.7	5.7	2.5	2.5	-31.9	0.2	-6.8	-1.49e-02	-2.26e-02	0.2
1391	ok	0.24	0.1	2.69e-02	5.7	5.7	2.5	2.5	-67.0	-2.6	5.7	-9.53e-02	-7.69e-03	6.45e-03
1414	ok	0.24	0.1	2.36e-02	5.7	5.7	2.5	2.5	-50.9	-7.1	14.3	-7.69e-02	-1.26e-02	5.88e-03
1437	ok	0.24	7.96e-02	1.80e-02	5.7	5.7	2.5	2.5	-30.5	-5.4	16.5	-6.71e-02	-1.07e-02	6.39e-03
1460	ok	0.24	5.82e-02	1.43e-02	5.7	5.7	2.5	2.5	-27.2	-1.3	-10.2	-0.9	-0.2	0.2
1483	ok	0.24	4.04e-02	1.31e-02	5.7	5.7	2.5	2.5	-26.2	-0.1	-10.8	-0.4	-9.85e-02	0.2
1510	ok	0.24	2.11e-02	1.16e-02	5.7	5.7	2.5	2.5	-27.6	0.5	-6.6	-3.87e-03	2.28e-02	0.2
1560	ok	0.24	0.1	2.77e-02	5.7	5.7	2.5	2.5	-45.9	-3.6	4.0	2.4	0.5	6.75e-03
1605	ok	0.24	0.1	2.17e-02	5.7	5.7	2.5	2.5	-34.2	-3.4	7.2	2.0	0.4	8.01e-02
1650	ok	0.24	7.71e-02	1.79e-02	5.7	5.7	2.5	2.5	-29.9	-4.7	16.1	-0.1	-2.94e-02	2.66e-03
1695	ok	0.24	5.81e-02	1.44e-02	5.7	5.7	2.5	2.5	-28.7	-3.1	-11.3	-1.0	-0.2	6.34e-02
1740	ok	0.24	3.98e-02	1.27e-02	5.7	5.7	2.5	2.5	-27.5	-2.4	-8.2	-0.5	-0.1	5.95e-02

1785	ok	0.24	2.89e-02	9.82e-03	5.7	5.7	2.5	2.5	-23.7	-2.3	-4.4	-9.74e-02	-6.64e-03	6.51e-02
1831	ok	0.24	0.1	2.01e-02	5.7	5.7	2.5	2.5	-43.2	0.2	2.6	2.3	0.4	0.1
1854	ok	0.24	0.1	1.83e-02	5.7	5.7	2.5	2.5	-35.6	-2.0	5.8	1.8	0.3	0.2
1877	ok	0.24	8.85e-02	1.34e-02	5.7	5.7	2.5	2.5	-22.0	-2.4	9.7	5.15e-02	4.65e-02	0.2
1900	ok	0.24	6.19e-02	1.02e-02	5.7	5.7	2.5	2.5	-19.1	-1.9	-8.7	0.9	0.2	0.2
1923	ok	0.24	4.11e-02	9.29e-03	5.7	5.7	2.5	2.5	-19.9	-1.6	-7.9	0.4	9.03e-02	0.2
1950	ok	0.24	2.96e-02	8.85e-03	5.7	5.7	2.5	2.5	-20.2	0.4	-6.4	-1.91e-02	-1.22e-02	0.2
1996	ok	0.24	0.1	2.00e-02	5.7	5.7	2.5	2.5	-40.4	-5.60e-03	-1.9	-0.1	-6.21e-03	2.02e-02
2019	ok	0.24	0.1	1.69e-02	5.7	5.7	2.5	2.5	-31.0	-1.7	6.3	-7.13e-02	-4.82e-02	0.2
2042	ok	0.24	9.16e-02	1.24e-02	5.7	5.7	2.5	2.5	-21.6	-2.2	9.7	-6.91e-02	-4.86e-02	0.2
2065	ok	0.24	6.82e-02	9.87e-03	5.7	5.7	2.5	2.5	-17.6	-2.4	-8.3	-6.42e-02	-3.05e-02	0.2
2088	ok	0.24	4.03e-02	8.43e-03	5.7	5.7	2.5	2.5	-15.4	7.75e-02	-6.4	-0.4	-7.40e-02	0.2
2115	ok	0.24	3.45e-02	7.25e-03	5.7	5.7	2.5	2.5	-16.2	0.4	-5.8	2.07e-03	3.78e-02	0.2
2165	ok	0.24	0.2	2.22e-02	5.7	5.7	2.5	2.5	-36.4	-3.8	-8.2	2.4	0.5	0.1
2210	ok	0.24	0.1	1.57e-02	5.7	5.7	2.5	2.5	-14.8	-2.3	-6.9	1.9	0.4	0.1
2255	ok	0.24	8.92e-02	1.15e-02	5.7	5.7	2.5	2.5	-13.9	-1.7	4.1	1.3	0.3	8.91e-02
2300	ok	0.24	6.85e-02	9.95e-03	5.7	5.7	2.5	2.5	-7.4	-5.16e-02	8.9	0.8	0.2	7.93e-02
2345	ok	0.24	4.19e-02	8.26e-03	5.7	5.7	2.5	2.5	-16.8	-2.2	-7.2	-0.5	-0.1	6.08e-02
2390	ok	0.24	3.26e-02	5.40e-03	5.7	5.7	2.5	2.5	-12.6	-1.3	-3.2	-8.76e-02	8.58e-03	6.75e-02
2441	ok	0.24	0.2	2.79e-02	5.7	5.7	2.5	2.5	-43.6	-4.3	-10.1	2.3	0.4	0.3
2464	ok	0.24	0.1	1.32e-02	5.7	5.7	2.5	2.5	-15.0	-12.4	-10.0	1.7	0.4	0.3
2487	ok	0.24	0.1	6.45e-03	5.7	5.7	2.5	2.5	-12.2	-1.4	6.8	1.2	0.2	0.2
2510	ok	0.24	8.16e-02	5.93e-03	5.7	5.7	2.5	2.5	-7.9	1.2	8.4	0.7	0.2	0.2
2533	ok	0.24	5.24e-02	4.53e-03	5.7	5.7	2.5	2.5	-3.5	-1.0	6.9	0.3	8.48e-02	0.2
2560	ok	0.24	3.15e-02	3.85e-03	5.7	5.7	2.5	2.5	-9.2	0.5	-2.1	-3.61e-02	4.04e-04	0.2
2759	ok	0.24	0.3	5.89e-02	5.7	5.7	2.5	2.5	-133.6	-27.1	-39.8	-4.6	-0.7	-7.78e-02
2782	ok	0.24	0.3	1.67e-02	5.7	5.7	2.5	2.5	34.6	-1.7	10.8	-2.9	-0.6	-1.03e-02
2805	ok	0.24	0.1	8.31e-03	5.7	5.7	2.5	2.5	-6.3	1.5	4.9	-3.4	-0.6	6.92e-02
2828	ok	0.24	7.44e-02	5.97e-03	5.7	5.7	2.5	2.5	-9.5	0.4	2.8	-9.05e-02	-2.04e-02	1.10e-02
2851	ok	0.24	3.86e-02	4.34e-03	5.7	5.7	2.5	2.5	-6.3	-0.4	5.0	-0.2	-3.36e-02	0.3
2878	ok	0.24	3.37e-02	3.11e-03	5.7	5.7	2.5	2.5	-4.4	-1.8	4.0	0.2	0.1	0.3
3065	ok	0.24	0.3	6.91e-02	5.7	5.7	2.5	2.5	-151.7	-34.7	-52.2	-4.5	-0.8	-0.4
3112	ok	0.24	0.4	1.77e-02	5.7	5.7	2.5	2.5	33.9	18.7	5.6	-3.0	-0.7	-0.2
3159	ok	0.24	0.2	5.61e-03	5.7	5.7	2.5	2.5	-5.9	6.7	12.7	-2.0	-0.5	-0.1
3206	ok	0.24	0.1	6.22e-03	5.7	5.7	2.5	2.5	-9.4	0.9	0.3	-0.2	-4.06e-02	-1.64e-02
3253	ok	0.24	4.59e-02	4.69e-03	5.7	5.7	2.5	2.5	-4.9	1.1	-4.4	0.3	9.66e-02	4.63e-02
3300	ok	0.24	1.80e-02	2.51e-03	5.7	5.7	2.5	2.5	-3.6	-0.7	3.7	0.1	-2.78e-02	-1.27e-02

Nodo	**x/d**	**V N/M**	**ver. rid**	**Af pr-**	**Af pr+**	**Af sec-**	**Af sec+**	**N z**	**N o**	**N zo**	**M z**	**M o**	**M zo**
								-371.29	-64.87	-52.24	-4.55	-0.77	-0.37
	0.24	0.55	0.16	5.65	5.65	2.51	2.51	34.58	18.70	92.34	2.71	0.61	0.33

Nodo	**Stato**	**Max tau** kN/ m2	**Ver V pr**	**Ver V sec**	**Af V pr**	**Af V sec**	**V pr** kN/ m	**V sec** kN/ m
292	ok	1.46						
339	ok	1.18						
386	ok	0.77						
433	ok	0.52						
480	ok	0.35						
527	ok	0.62						
621	ok	1.60						
644	ok	1.15						
667	ok	0.88						
690	ok	0.54						
713	ok	0.43						
740	ok	0.55						
786	ok	1.61						
809	ok	1.06						
832	ok	0.88						
855	ok	0.52						
878	ok	0.33						
905	ok	0.36						
955	ok	1.43						
1000	ok	1.07						
1045	ok	0.75						
1090	ok	0.52						
1135	ok	0.29						
1180	ok	0.37						
1226	ok	1.54						
1249	ok	1.08						
1272	ok	0.85						
1295	ok	0.54						
1318	ok	0.33						
1345	ok	0.32						
1391	ok	1.54						
1414	ok	1.07						
1437	ok	0.85						

1460	ok	0.52
1483	ok	0.34
1510	ok	0.31
1560	ok	1.40
1605	ok	1.07
1650	ok	0.75
1695	ok	0.52
1740	ok	0.29
1785	ok	0.34
1831	ok	1.52
1854	ok	1.08
1877	ok	0.85
1900	ok	0.54
1923	ok	0.32
1950	ok	0.32
1996	ok	1.52
2019	ok	1.06
2042	ok	0.85
2065	ok	0.52
2088	ok	0.34
2115	ok	0.31
2165	ok	1.69
2210	ok	1.08
2255	ok	0.74
2300	ok	0.50
2345	ok	0.29
2390	ok	0.35
2441	ok	1.87
2464	ok	1.08
2487	ok	0.77
2510	ok	0.44
2533	ok	0.26
2560	ok	0.35
2759	ok	1.93
2782	ok	1.09
2805	ok	0.83
2828	ok	0.42
2851	ok	0.26
2878	ok	0.42
3065	ok	1.94
3112	ok	1.17
3159	ok	0.73
3206	ok	0.42
3253	ok	0.26
3300	ok	0.43

Nodo	Max tau	Ver V pr	Ver V sec	Af V pr	Af V sec	V pr	V sec
	1.94						

Macro Setto	Spessore	Id Materiale	Id Criterio	Progettazione
	cm			
11	15.00	1	1	Singolo elemento NON DISSIPATIVO

Nodo	Stato	x/d	V N/M	ver. rid	Af pr-	Af pr+	Af sec-	Af sec+	N z	N o	N zo	M z	M o	M zo
									kN/ m	kN/ m	kN/ m	kN	kN	kN
296	ok	0.24	0.3	0.2	5.7	5.7	2.5	2.5	-375.2	-65.3	94.0	-1.09e-02	-3.92e-03	3.16e-02
343	ok	0.24	0.3	3.11e-02	5.7	5.7	2.5	2.5	-68.8	-15.6	2.1	2.7	0.6	-4.03e-02
390	ok	0.24	0.2	2.44e-02	5.7	5.7	2.5	2.5	-51.6	-12.6	-20.5	2.0	0.5	-3.24e-02
437	ok	0.24	0.1	1.96e-02	5.7	5.7	2.5	2.5	-43.0	-7.2	6.2	1.3	0.3	-5.00e-02
484	ok	0.24	7.91e-02	1.96e-02	5.7	5.7	2.5	2.5	-25.8	-3.6	1.5	0.7	0.2	-5.56e-02
531	ok	0.24	4.58e-02	2.63e-02	5.7	5.7	2.5	2.5	-44.5	-12.5	-18.8	0.1	-2.83e-02	-3.06e-02
623	ok	0.24	0.5	0.1	5.7	5.7	2.5	2.5	-313.4	-39.6	55.1	1.14e-02	-3.95e-03	-5.24e-04
646	ok	0.24	0.3	4.22e-02	5.7	5.7	2.5	2.5	-67.4	4.2	-3.6	2.5	0.6	0.1
669	ok	0.24	0.1	2.23e-02	5.7	5.7	2.5	2.5	-52.1	12.2	-8.6	1.9	0.4	0.2
692	ok	0.24	7.43e-02	1.81e-02	5.7	5.7	2.5	2.5	-44.1	-7.0	-4.6	1.2	0.3	0.1
715	ok	0.24	3.92e-02	1.80e-02	5.7	5.7	2.5	2.5	-32.6	-4.3	1.16e-03	0.6	0.1	0.1
744	ok	0.24	4.39e-02	2.14e-02	5.7	5.7	2.5	2.5	-41.7	-7.3	-12.6	-1.07e-03	-6.47e-02	0.2
788	ok	0.24	0.2	7.60e-02	5.7	5.7	2.5	2.5	-184.4	-20.9	31.6	-4.56e-02	-3.02e-03	-3.68e-03
811	ok	0.24	0.1	3.43e-02	5.7	5.7	2.5	2.5	-65.0	-29.3	31.4	-4.77e-02	-8.56e-03	-4.72e-03
834	ok	0.24	0.1	2.38e-02	5.7	5.7	2.5	2.5	-39.5	3.1	-8.0	-1.4	-0.3	0.2
857	ok	0.24	7.43e-02	1.79e-02	5.7	5.7	2.5	2.5	-40.2	-4.2	-6.8	-0.9	-0.2	0.2
880	ok	0.24	4.91e-02	1.82e-02	5.7	5.7	2.5	2.5	-36.0	-1.3	-9.0	-0.4	-9.50e-02	0.2
909	ok	0.24	3.82e-02	1.62e-02	5.7	5.7	2.5	2.5	-38.0	0.3	-8.6	-6.57e-03	1.14e-02	0.2

959	ok	0.24	0.2	4.87e-02	5.7	5.7	2.5	2.5	-120.2	-16.3	14.4	-0.1	-1.86e-02	-1.22e-02
1004	ok	0.24	0.1	3.08e-02	5.7	5.7	2.5	2.5	-64.4	-15.9	26.9	-0.1	-2.66e-02	-4.02e-03
1049	ok	0.24	9.48e-02	2.15e-02	5.7	5.7	2.5	2.5	-45.6	-2.3	-8.4	-1.5	-0.3	6.54e-02
1094	ok	0.24	5.18e-02	1.79e-02	5.7	5.7	2.5	2.5	-43.1	-3.9	-7.1	-1.0	-0.2	7.76e-02
1139	ok	0.24	3.30e-02	1.79e-02	5.7	5.7	2.5	2.5	-37.7	-1.6	-5.9	-0.5	-9.71e-02	7.50e-02
1184	ok	0.24	2.25e-02	1.40e-02	5.7	5.7	2.5	2.5	-33.9	-1.0	-6.4	7.04e-02	1.71e-02	7.15e-02
1228	ok	0.24	0.1	3.29e-02	5.7	5.7	2.5	2.5	-81.7	-2.6	7.9	7.16e-02	-4.28e-04	8.42e-03
1251	ok	0.24	0.1	2.63e-02	5.7	5.7	2.5	2.5	-55.3	-9.9	17.8	3.31e-02	4.71e-03	3.25e-03
1274	ok	0.24	8.65e-02	1.82e-02	5.7	5.7	2.5	2.5	-28.9	-7.9	16.5	1.44e-02	4.87e-03	7.43e-03
1297	ok	0.24	5.18e-02	1.44e-02	5.7	5.7	2.5	2.5	-32.7	-1.9	-8.1	0.9	0.2	0.2
1320	ok	0.24	3.01e-02	1.35e-02	5.7	5.7	2.5	2.5	-30.4	-0.5	-9.3	0.4	8.91e-02	0.2
1349	ok	0.24	1.92e-02	1.31e-02	5.7	5.7	2.5	2.5	-28.6	0.1	-7.6	6.77e-03	1.71e-03	0.2
1393	ok	0.24	0.1	2.72e-02	5.7	5.7	2.5	2.5	-67.3	-2.6	5.6	-7.63e-02	-3.96e-03	8.02e-03
1416	ok	0.24	0.1	2.41e-02	5.7	5.7	2.5	2.5	-51.0	-7.1	14.2	-5.71e-02	-1.46e-02	5.50e-03
1439	ok	0.24	8.06e-02	1.83e-02	5.7	5.7	2.5	2.5	-30.3	-5.5	16.3	-5.01e-02	-1.22e-02	7.42e-03
1462	ok	0.24	5.87e-02	1.43e-02	5.7	5.7	2.5	2.5	-26.9	-1.4	-10.0	-0.9	-0.2	0.2
1485	ok	0.24	4.10e-02	1.29e-02	5.7	5.7	2.5	2.5	-25.9	-0.2	-10.6	-0.4	-9.71e-02	0.2
1514	ok	0.24	2.24e-02	1.14e-02	5.7	5.7	2.5	2.5	-27.1	0.5	-6.5	4.30e-04	3.18e-02	0.2
1564	ok	0.24	0.1	2.84e-02	5.7	5.7	2.5	2.5	-45.9	-3.5	4.3	2.5	0.5	6.61e-03
1609	ok	0.24	0.1	2.21e-02	5.7	5.7	2.5	2.5	-34.1	-3.4	7.5	2.0	0.4	7.65e-02
1654	ok	0.24	8.24e-02	1.81e-02	5.7	5.7	2.5	2.5	-29.9	-4.7	16.0	-0.1	-3.04e-02	5.40e-04
1699	ok	0.24	6.11e-02	1.45e-02	5.7	5.7	2.5	2.5	-28.4	-3.0	-11.0	-1.0	-0.2	6.49e-02
1744	ok	0.24	4.06e-02	1.26e-02	5.7	5.7	2.5	2.5	-27.6	-2.1	-9.1	-0.5	-9.84e-02	6.31e-02
1789	ok	0.24	2.76e-02	9.65e-03	5.7	5.7	2.5	2.5	-23.3	-2.2	-4.3	-8.16e-02	4.61e-03	6.97e-02
1833	ok	0.24	0.1	2.08e-02	5.7	5.7	2.5	2.5	-43.2	0.3	2.8	2.4	0.4	0.1
1856	ok	0.24	0.1	1.88e-02	5.7	5.7	2.5	2.5	-35.5	-2.0	6.0	1.9	0.3	0.2
1879	ok	0.24	8.97e-02	1.36e-02	5.7	5.7	2.5	2.5	-23.2	-3.9	10.0	5.52e-02	7.91e-03	6.33e-03
1902	ok	0.24	6.61e-02	1.02e-02	5.7	5.7	2.5	2.5	-18.8	-1.9	-8.5	0.9	0.2	0.2
1925	ok	0.24	4.24e-02	9.10e-03	5.7	5.7	2.5	2.5	-19.3	-1.5	-8.3	0.4	8.43e-02	0.2
1954	ok	0.24	3.21e-02	8.68e-03	5.7	5.7	2.5	2.5	-16.7	0.1	-6.4	7.35e-03	8.64e-03	0.2
1998	ok	0.24	0.1	2.06e-02	5.7	5.7	2.5	2.5	-41.7	7.83e-03	-1.9	-7.00e-02	-4.77e-03	1.20e-02
2021	ok	0.24	0.1	1.74e-02	5.7	5.7	2.5	2.5	-30.6	-1.5	7.0	-5.99e-02	-1.65e-02	5.39e-03
2044	ok	0.24	9.42e-02	1.26e-02	5.7	5.7	2.5	2.5	-21.4	-2.1	10.4	-5.39e-02	-1.44e-02	7.90e-03
2067	ok	0.24	6.89e-02	9.90e-03	5.7	5.7	2.5	2.5	-17.4	-2.3	-8.1	-4.37e-02	-2.70e-02	0.2
2090	ok	0.24	3.98e-02	8.30e-03	5.7	5.7	2.5	2.5	-15.1	0.1	-6.4	-0.4	-7.63e-02	0.2
2119	ok	0.24	3.60e-02	7.11e-03	5.7	5.7	2.5	2.5	-15.9	0.4	-5.8	2.59e-03	4.14e-02	0.2
2169	ok	0.24	0.2	2.30e-02	5.7	5.7	2.5	2.5	-45.4	-4.1	-6.8	-0.2	-3.89e-02	-6.57e-03
2214	ok	0.24	0.1	1.61e-02	5.7	5.7	2.5	2.5	-22.9	-3.1	-6.0	0.2	3.97e-02	1.16e-02
2259	ok	0.24	9.30e-02	1.16e-02	5.7	5.7	2.5	2.5	-13.9	-1.6	4.0	1.3	0.3	8.38e-02
2304	ok	0.24	6.84e-02	1.00e-02	5.7	5.7	2.5	2.5	-7.3	7.74e-02	9.0	0.8	0.2	7.39e-02
2349	ok	0.24	4.19e-02	8.22e-03	5.7	5.7	2.5	2.5	-16.6	-2.1	-7.1	-0.5	-0.1	6.23e-02
2394	ok	0.24	3.21e-02	5.29e-03	5.7	5.7	2.5	2.5	-12.3	-1.2	-3.3	-7.01e-02	1.44e-02	7.17e-02
2443	ok	0.24	0.1	2.62e-02	5.7	5.7	2.5	2.5	-62.3	-7.8	-13.7	7.78e-02	1.01e-02	3.46e-02
2466	ok	0.24	0.1	1.43e-02	5.7	5.7	2.5	2.5	-13.9	-12.2	-10.6	-7.83e-03	9.99e-04	2.61e-02
2489	ok	0.24	0.1	6.50e-03	5.7	5.7	2.5	2.5	-12.0	-1.4	6.8	1.2	0.3	0.2
2512	ok	0.24	8.40e-02	6.04e-03	5.7	5.7	2.5	2.5	-7.8	1.5	8.5	0.7	0.2	0.2
2535	ok	0.24	5.14e-02	4.54e-03	5.7	5.7	2.5	2.5	-3.2	-0.9	6.8	0.3	8.43e-02	0.2
2564	ok	0.24	3.13e-02	3.77e-03	5.7	5.7	2.5	2.5	-8.9	0.3	-2.1	-6.16e-03	8.81e-03	0.2
2761	ok	0.24	0.3	5.80e-02	5.7	5.7	2.5	2.5	-129.8	-26.2	-41.4	4.2	0.7	7.67e-02
2784	ok	0.24	0.3	1.55e-02	5.7	5.7	2.5	2.5	55.7	-11.4	-15.3	2.5	0.3	3.79e-02
2807	ok	0.24	0.2	7.70e-03	5.7	5.7	2.5	2.5	-10.7	-1.7	5.7	-0.6	-7.31e-02	0.2
2830	ok	0.24	7.58e-02	6.12e-03	5.7	5.7	2.5	2.5	-9.5	0.6	3.2	-5.72e-02	-1.35e-02	7.12e-03
2853	ok	0.24	3.88e-02	4.36e-03	5.7	5.7	2.5	2.5	-6.5	0.6	-3.2	-1.91e-02	-2.72e-02	1.29e-02
2882	ok	0.24	3.19e-02	3.02e-03	5.7	5.7	2.5	2.5	-3.0	-2.2	4.4	0.1	7.26e-02	0.2
3069	ok	0.24	0.3	7.03e-02	5.7	5.7	2.5	2.5	-150.2	-37.0	-55.3	3.9	0.7	0.3
3116	ok	0.24	0.4	1.64e-02	5.7	5.7	2.5	2.5	79.7	18.2	2.1	2.6	0.4	0.3
3163	ok	0.24	0.2	5.73e-03	5.7	5.7	2.5	2.5	-8.3	4.1	2.0	-0.1	-2.88e-02	-1.40e-02
3210	ok	0.24	9.65e-02	6.39e-03	5.7	5.7	2.5	2.5	-8.9	1.7	7.3	-0.1	-2.71e-02	-1.00e-02
3257	ok	0.24	4.44e-02	4.75e-03	5.7	5.7	2.5	2.5	-5.1	1.4	-4.1	0.3	0.1	5.66e-02
3304	ok	0.24	2.04e-02	2.14e-03	5.7	5.7	2.5	2.5	-2.1	-0.2	3.9	8.94e-02	-2.97e-02	-4.83e-03

Nodo	**x/d**	**V N/M**	**ver. rid**	**Af pr-**	**Af pr+**	**Af sec-**	**Af sec+**	**N z**	**N o**	**N zo**	**M z**	**M o**	**M zo**
								-375.17	-65.29	-55.27	-1.47	-0.29	-0.06
	0.24	0.53	0.16	5.65	5.65	2.51	2.51	79.66	18.24	94.02	4.19	0.71	0.31

Nodo	**Stato**	**Max tau**	**Ver V pr**	**Ver V sec**	**Af V pr**	**Af V sec**	**V pr**	**V sec**
		kN/ m2					kN/ m	kN/ m
296	ok	1.44						
343	ok	1.20						
390	ok	0.78						
437	ok	0.53						
484	ok	0.36						
531	ok	0.63						
623	ok	1.60						
646	ok	1.16						
669	ok	0.90						
692	ok	0.56						

715	ok	0.44
744	ok	0.59
788	ok	1.60
811	ok	1.07
834	ok	0.89
857	ok	0.53
880	ok	0.34
909	ok	0.37
959	ok	1.45
1004	ok	1.08
1049	ok	0.76
1094	ok	0.53
1139	ok	0.29
1184	ok	0.38
1228	ok	1.56
1251	ok	1.10
1274	ok	0.87
1297	ok	0.55
1320	ok	0.33
1349	ok	0.29
1393	ok	1.56
1416	ok	1.09
1439	ok	0.87
1462	ok	0.52
1485	ok	0.35
1514	ok	0.32
1564	ok	1.43
1609	ok	1.08
1654	ok	0.76
1699	ok	0.53
1744	ok	0.30
1789	ok	0.34
1833	ok	1.55
1856	ok	1.10
1879	ok	0.87
1902	ok	0.55
1925	ok	0.32
1954	ok	0.31
1998	ok	1.54
2021	ok	1.08
2044	ok	0.87
2067	ok	0.53
2090	ok	0.34
2119	ok	0.29
2169	ok	1.76
2214	ok	1.09
2259	ok	0.76
2304	ok	0.51
2349	ok	0.29
2394	ok	0.32
2443	ok	1.93
2466	ok	1.10
2489	ok	0.77
2512	ok	0.44
2535	ok	0.26
2564	ok	0.33
2761	ok	2.09
2784	ok	1.10
2807	ok	0.83
2830	ok	0.43
2853	ok	0.26
2882	ok	0.43
3069	ok	2.11
3116	ok	1.14
3163	ok	0.74
3210	ok	0.43
3257	ok	0.26
3304	ok	0.43

Nodo	Max tau	Ver V pr	Ver V sec	Af V pr	Af V sec	V pr	V sec
	2.11						

Macro Setto	Spessore	Id Materiale	Id Criterio	Progettazione
	cm			
12	15.00	1	1	Singolo elemento NON DISSIPATIVO

Nodo	Stato	x/d	V N/M	ver. rid	Af pr-	Af pr+	Af sec-	Af sec+	N z	N o	N zo	M z	M o	M zo
									kN/ m	kN/ m	kN/ m	kN	kN	kN
298	ok	0.24	0.2	0.2	5.7	5.7	2.5	2.5	-403.1	-69.9	101.6	-1.55e-02	-3.60e-03	2.32e-02
345	ok	0.24	0.4	2.97e-02	5.7	5.7	2.5	2.5	-68.7	-15.6	3.3	2.7	0.6	-4.39e-02
392	ok	0.24	0.2	2.37e-02	5.7	5.7	2.5	2.5	-49.5	-12.2	-20.7	2.0	0.5	-3.28e-02
439	ok	0.24	0.1	1.93e-02	5.7	5.7	2.5	2.5	-42.0	-6.9	5.9	1.3	0.3	-5.03e-02
486	ok	0.24	8.17e-02	1.95e-02	5.7	5.7	2.5	2.5	-25.1	-3.4	0.9	0.6	0.1	-5.45e-02
533	ok	0.24	4.56e-02	2.64e-02	5.7	5.7	2.5	2.5	-44.3	-12.6	-19.1	0.1	-2.58e-02	-2.81e-02
624	ok	0.24	0.5	0.1	5.7	5.7	2.5	2.5	-330.0	-39.5	57.0	4.12e-03	-3.63e-03	-2.50e-03
647	ok	0.24	0.3	4.79e-02	5.7	5.7	2.5	2.5	-67.6	2.5	-1.7	2.6	0.6	0.1
670	ok	0.24	0.1	2.19e-02	5.7	5.7	2.5	2.5	-51.2	11.7	-8.2	1.9	0.4	0.2
693	ok	0.24	7.56e-02	1.79e-02	5.7	5.7	2.5	2.5	-43.2	-7.2	-4.7	1.3	0.3	0.1
716	ok	0.24	3.60e-02	1.81e-02	5.7	5.7	2.5	2.5	-31.9	-4.3	-0.3	0.6	0.1	0.1
746	ok	0.24	4.32e-02	2.15e-02	5.7	5.7	2.5	2.5	-41.3	-7.2	-13.1	-2.81e-03	-6.01e-02	0.2
789	ok	0.24	0.2	7.99e-02	5.7	5.7	2.5	2.5	-194.4	-21.1	32.4	-3.09e-02	-2.39e-03	-4.94e-03
812	ok	0.24	0.1	3.80e-02	5.7	5.7	2.5	2.5	-69.3	-30.9	33.9	-3.08e-02	-6.41e-03	-4.15e-03
835	ok	0.24	0.1	2.35e-02	5.7	5.7	2.5	2.5	-55.2	-1.1	-1.9	0.2	6.45e-02	0.3
858	ok	0.24	7.37e-02	1.76e-02	5.7	5.7	2.5	2.5	-39.3	-4.6	-6.6	-0.9	-0.2	0.2
881	ok	0.24	4.86e-02	1.82e-02	5.7	5.7	2.5	2.5	-35.3	-1.4	-9.2	-0.4	-9.72e-02	0.2
911	ok	0.24	3.81e-02	1.62e-02	5.7	5.7	2.5	2.5	-37.5	0.2	-9.1	-5.70e-03	-2.76e-03	0.2
961	ok	0.24	0.2	5.14e-02	5.7	5.7	2.5	2.5	-126.9	-16.8	14.9	-6.70e-02	-1.09e-02	-6.54e-03
1006	ok	0.24	0.1	3.34e-02	5.7	5.7	2.5	2.5	-68.7	-16.7	29.0	-8.81e-02	-2.01e-02	-8.98e-04
1051	ok	0.24	9.80e-02	2.27e-02	5.7	5.7	2.5	2.5	-19.6	-10.7	29.7	-9.91e-02	-2.21e-02	7.17e-04
1096	ok	0.24	5.23e-02	1.79e-02	5.7	5.7	2.5	2.5	-42.7	-4.2	-6.6	-1.0	-0.2	7.60e-02
1141	ok	0.24	3.15e-02	1.78e-02	5.7	5.7	2.5	2.5	-37.2	-1.7	-5.8	-0.5	-9.66e-02	7.18e-02
1186	ok	0.24	2.17e-02	1.39e-02	5.7	5.7	2.5	2.5	-33.6	-1.1	-6.3	5.79e-02	1.53e-02	7.18e-02
1229	ok	0.24	0.1	3.50e-02	5.7	5.7	2.5	2.5	-87.1	-2.5	7.8	-1.39e-03	-9.46e-03	4.29e-03
1252	ok	0.24	0.1	2.87e-02	5.7	5.7	2.5	2.5	-59.5	-10.3	18.3	8.29e-03	-7.00e-04	1.23e-03
1275	ok	0.24	8.71e-02	1.94e-02	5.7	5.7	2.5	2.5	-30.3	-8.5	16.9	8.45e-03	2.56e-03	9.64e-04
1298	ok	0.24	5.28e-02	1.43e-02	5.7	5.7	2.5	2.5	-32.6	-2.2	-7.6	0.9	0.2	0.2
1321	ok	0.24	2.90e-02	1.33e-02	5.7	5.7	2.5	2.5	-30.0	-0.6	-9.0	0.4	9.12e-02	0.2
1351	ok	0.24	1.85e-02	1.29e-02	5.7	5.7	2.5	2.5	-28.2	7.99e-02	-7.4	4.85e-03	1.33e-03	0.2
1394	ok	0.24	0.1	2.98e-02	5.7	5.7	2.5	2.5	-72.3	-2.6	5.5	-6.54e-02	-4.31e-03	3.99e-03
1417	ok	0.24	0.1	2.63e-02	5.7	5.7	2.5	2.5	-55.1	-7.4	14.4	-4.51e-02	-1.13e-02	2.17e-04
1440	ok	0.24	7.84e-02	1.95e-02	5.7	5.7	2.5	2.5	-31.8	-6.0	16.6	-4.05e-02	-9.31e-03	7.91e-04
1463	ok	0.24	5.71e-02	1.47e-02	5.7	5.7	2.5	2.5	-26.7	-1.6	-9.5	-0.9	-0.2	0.2
1486	ok	0.24	3.98e-02	1.27e-02	5.7	5.7	2.5	2.5	-25.6	-0.3	-10.2	-0.4	-9.91e-02	0.2
1516	ok	0.24	2.21e-02	1.12e-02	5.7	5.7	2.5	2.5	-26.8	0.5	-6.2	1.22e-03	3.10e-02	0.2
1566	ok	0.24	0.1	3.08e-02	5.7	5.7	2.5	2.5	-50.6	-3.8	4.1	2.5	0.5	1.00e-02
1611	ok	0.24	0.1	2.41e-02	5.7	5.7	2.5	2.5	-38.4	-3.9	6.7	2.0	0.4	7.74e-02
1656	ok	0.24	7.88e-02	1.94e-02	5.7	5.7	2.5	2.5	-31.8	-5.2	16.1	-8.20e-02	-1.95e-02	-1.50e-04
1701	ok	0.24	5.85e-02	1.49e-02	5.7	5.7	2.5	2.5	-28.4	-3.2	-10.4	-1.0	-0.2	6.36e-02
1746	ok	0.24	3.80e-02	1.25e-02	5.7	5.7	2.5	2.5	-27.3	-2.3	-8.6	-0.5	-9.68e-02	6.19e-02
1791	ok	0.24	2.66e-02	9.52e-03	5.7	5.7	2.5	2.5	-23.1	-2.1	-4.0	-6.93e-02	5.53e-03	7.02e-02
1834	ok	0.24	0.1	2.35e-02	5.7	5.7	2.5	2.5	-48.3	0.4	2.4	2.4	0.4	0.1
1857	ok	0.24	0.1	2.10e-02	5.7	5.7	2.5	2.5	-40.0	-2.2	5.1	1.9	0.3	0.2
1880	ok	0.24	8.53e-02	1.47e-02	5.7	5.7	2.5	2.5	-25.3	-4.9	8.9	4.06e-02	5.12e-03	4.12e-03
1903	ok	0.24	6.46e-02	1.06e-02	5.7	5.7	2.5	2.5	-18.9	-2.1	-8.2	0.9	0.2	0.2
1926	ok	0.24	4.09e-02	8.91e-03	5.7	5.7	2.5	2.5	-19.1	-1.7	-7.9	0.4	8.61e-02	0.2
1956	ok	0.24	3.12e-02	8.48e-03	5.7	5.7	2.5	2.5	-16.4	7.04e-02	-6.1	5.32e-03	7.00e-03	0.2
1999	ok	0.24	0.1	2.38e-02	5.7	5.7	2.5	2.5	-48.3	8.01e-02	-2.0	-5.64e-02	-3.80e-03	9.02e-03
2022	ok	0.24	0.1	1.98e-02	5.7	5.7	2.5	2.5	-38.8	-3.8	-3.9	-5.20e-02	-1.39e-02	8.08e-03
2045	ok	0.24	9.44e-02	1.34e-02	5.7	5.7	2.5	2.5	-23.4	-4.6	8.0	-4.55e-02	-9.02e-03	5.11e-03
2068	ok	0.24	6.86e-02	1.01e-02	5.7	5.7	2.5	2.5	-17.4	-2.6	-7.8	-3.76e-02	-2.62e-02	0.2
2091	ok	0.24	3.87e-02	8.13e-03	5.7	5.7	2.5	2.5	-15.0	-5.27e-02	-6.1	-0.4	-7.45e-02	0.2
2121	ok	0.24	3.61e-02	6.91e-03	5.7	5.7	2.5	2.5	-15.6	0.4	-5.3	3.16e-03	3.92e-02	0.2
2171	ok	0.24	0.1	2.69e-02	5.7	5.7	2.5	2.5	-53.5	-4.4	-7.2	-0.2	-3.04e-02	-5.41e-03
2216	ok	0.24	0.1	1.87e-02	5.7	5.7	2.5	2.5	-27.8	-4.3	-10.0	0.2	2.94e-02	8.45e-03
2261	ok	0.24	8.79e-02	1.20e-02	5.7	5.7	2.5	2.5	-23.3	-6.4	3.5	-0.1	-2.78e-02	2.53e-03
2306	ok	0.24	6.59e-02	1.02e-02	5.7	5.7	2.5	2.5	-7.4	-2.0	4.6	0.8	0.2	6.92e-02
2351	ok	0.24	4.07e-02	8.31e-03	5.7	5.7	2.5	2.5	-16.4	-2.2	-6.6	-0.5	-9.98e-02	6.09e-02
2396	ok	0.24	3.19e-02	5.15e-03	5.7	5.7	2.5	2.5	-12.1	-1.1	-3.0	-5.88e-02	1.30e-02	7.18e-02
2444	ok	0.24	0.1	3.12e-02	5.7	5.7	2.5	2.5	-62.4	-4.8	-11.3	1.6	0.3	-0.3
2467	ok	0.24	0.1	2.20e-02	5.7	5.7	2.5	2.5	-8.0	-10.5	-22.0	0.9	0.2	-0.2
2490	ok	0.24	0.1	6.61e-03	5.7	5.7	2.5	2.5	-7.6	-7.7	4.3	1.63e-02	8.65e-03	1.63e-02
2513	ok	0.24	8.35e-02	6.23e-03	5.7	5.7	2.5	2.5	-7.6	-2.1	7.0	0.7	0.2	0.2
2536	ok	0.24	5.28e-02	4.71e-03	5.7	5.7	2.5	2.5	-3.1	-0.9	7.2	0.3	8.49e-02	0.2
2566	ok	0.24	3.28e-02	3.62e-03	5.7	5.7	2.5	2.5	-8.7	0.3	-1.7	-4.64e-03	6.26e-03	0.2
2762	ok	0.24	0.3	7.60e-02	5.7	5.7	2.5	2.5	-142.1	-24.4	-47.9	4.3	0.7	9.51e-02
2785	ok	0.24	0.3	1.95e-02	5.7	5.7	2.5	2.5	60.3	-21.1	-12.9	2.6	0.3	5.04e-02
2808	ok	0.24	0.2	6.80e-03	5.7	5.7	2.5	2.5	-9.0	-1.9	6.6	-0.5	-7.12e-02	0.2
2831	ok	0.24	7.70e-02	6.41e-03	5.7	5.7	2.5	2.5	-9.4	1.2	6.7	-4.25e-02	-1.07e-02	6.40e-03
2854	ok	0.24	3.80e-02	4.54e-03	5.7	5.7	2.5	2.5	-4.1	-0.3	2.9	-0.4	-7.01e-02	0.1
2884	ok	0.24	3.28e-02	3.17e-03	5.7	5.7	2.5	2.5	-2.9	-2.3	4.7	0.1	6.46e-02	0.2
3071	ok	0.24	0.3	0.1	5.7	5.7	2.5	2.5	-181.6	-43.1	-82.6	-0.7	-7.20e-02	-0.1
3118	ok	0.24	0.5	1.31e-02	5.7	5.7	2.5	2.5	100.4	26.3	15.0	2.6	0.4	0.3

3165	ok	0.24	0.2	5.41e-03	5.7	5.7	2.5	2.5	-8.0	6.1	2.8	-0.1	-2.14e-02	-9.08e-03
3212	ok	0.24	0.1	6.54e-03	5.7	5.7	2.5	2.5	-8.8	2.5	8.0	-8.75e-02	-2.11e-02	-7.42e-03
3259	ok	0.24	4.58e-02	4.88e-03	5.7	5.7	2.5	2.5	-5.2	1.6	-3.7	0.4	0.1	5.85e-02
3306	ok	0.24	1.99e-02	2.10e-03	5.7	5.7	2.5	2.5	-2.1	-2.18e-02	3.9	0.1	-3.44e-02	-3.48e-03

Nodo	**x/d**	**V N/M**	**ver. rid**	**Af pr-**	**Af pr+**	**Af sec-**	**Af sec+**	**N z**	**N o**	**N zo**	**M z**	**M o**	**M zo**
								-403.14	-69.89	-82.56	-0.97	-0.20	-0.32
	0.24	0.53	0.17	5.65	5.65	2.51	2.51	100.44	26.29	101.59	4.33	0.72	0.30

Nodo	**Stato**	**Max tau**	**Ver V pr**	**Ver V sec**	**Af V pr**	**Af V sec**	**V pr**	**V sec**
		kN/ m2					kN/ m	kN/ m
298	ok	1.46						
345	ok	1.21						
392	ok	0.79						
439	ok	0.53						
486	ok	0.36						
533	ok	0.62						
624	ok	1.61						
647	ok	1.16						
670	ok	0.90						
693	ok	0.56						
716	ok	0.45						
746	ok	0.60						
789	ok	1.62						
812	ok	1.07						
835	ok	0.90						
858	ok	0.53						
881	ok	0.34						
911	ok	0.37						
961	ok	1.45						
1006	ok	1.09						
1051	ok	0.78						
1096	ok	0.53						
1141	ok	0.29						
1186	ok	0.37						
1229	ok	1.57						
1252	ok	1.11						
1275	ok	0.88						
1298	ok	0.55						
1321	ok	0.33						
1351	ok	0.29						
1394	ok	1.57						
1417	ok	1.10						
1440	ok	0.88						
1463	ok	0.53						
1486	ok	0.35						
1516	ok	0.32						
1566	ok	1.44						
1611	ok	1.09						
1656	ok	0.78						
1701	ok	0.54						
1746	ok	0.30						
1791	ok	0.33						
1834	ok	1.55						
1857	ok	1.11						
1880	ok	0.88						
1903	ok	0.56						
1926	ok	0.32						
1956	ok	0.31						
1999	ok	1.55						
2022	ok	1.08						
2045	ok	0.88						
2068	ok	0.53						
2091	ok	0.35						
2121	ok	0.29						
2171	ok	1.76						
2216	ok	1.09						
2261	ok	0.77						
2306	ok	0.51						
2351	ok	0.30						
2396	ok	0.32						
2444	ok	1.94						
2467	ok	1.10						
2490	ok	0.78						
2513	ok	0.44						
2536	ok	0.26						
2566	ok	0.33						

2762	ok	2.09
2785	ok	1.09
2808	ok	0.83
2831	ok	0.43
2854	ok	0.26
2884	ok	0.43
3071	ok	2.11
3118	ok	1.14
3165	ok	0.74
3212	ok	0.43
3259	ok	0.26
3306	ok	0.43

Nodo	Max tau	Ver V pr	Ver V sec	Af V pr	Af V sec	V pr	V sec
	2.11						

Macro Setto	Spessore	Id Materiale	Id Criterio	Progettazione
	cm			
13	15.00	1	1	Singolo elemento NON DISSIPATIVO

Nodo	Stato	x/d	V N/M	ver. rid	Af pr-	Af pr+	Af sec-	Af sec+	N z	N o	N zo	M z	M o	M zo
									kN/ m	kN/ m	kN/ m	kN	kN	kN
300	ok	0.24	0.2	0.2	5.7	5.7	2.5	2.5	-413.8	-71.6	104.7	0.1	8.84e-03	-5.22e-03
347	ok	0.24	0.4	2.90e-02	5.7	5.7	2.5	2.5	60.8	9.5	48.7	0.1	2.80e-02	-1.91e-03
394	ok	0.24	0.2	2.35e-02	5.7	5.7	2.5	2.5	-47.2	-11.8	-18.4	0.1	3.38e-02	-1.25e-03
441	ok	0.24	0.1	1.92e-02	5.7	5.7	2.5	2.5	-41.7	-6.8	5.8	1.3	0.3	-5.15e-02
488	ok	0.24	8.25e-02	1.96e-02	5.7	5.7	2.5	2.5	-24.9	-3.4	0.8	0.6	0.1	-5.42e-02
535	ok	0.24	4.52e-02	2.65e-02	5.7	5.7	2.5	2.5	-44.1	-12.6	-19.2	8.37e-02	-7.21e-03	-2.68e-02
625	ok	0.24	0.5	0.1	5.7	5.7	2.5	2.5	-335.6	-39.2	57.5	5.29e-02	7.87e-04	2.54e-03
648	ok	0.24	0.3	5.05e-02	5.7	5.7	2.5	2.5	-52.0	-46.1	37.5	3.80e-02	9.12e-03	7.68e-04
671	ok	0.24	0.1	2.18e-02	5.7	5.7	2.5	2.5	-50.0	-4.5	-3.8	0.3	4.11e-02	0.2
694	ok	0.24	7.63e-02	1.79e-02	5.7	5.7	2.5	2.5	-42.9	-7.2	-4.7	1.3	0.3	0.1
717	ok	0.24	3.63e-02	1.82e-02	5.7	5.7	2.5	2.5	-31.7	-4.4	-0.4	0.6	0.1	0.1
748	ok	0.24	4.23e-02	2.16e-02	5.7	5.7	2.5	2.5	-42.2	-11.3	-12.7	1.79e-02	-8.33e-02	0.2
790	ok	0.24	0.2	8.13e-02	5.7	5.7	2.5	2.5	-197.8	-21.0	32.6	-2.16e-02	-1.02e-03	3.92e-03
813	ok	0.24	0.1	3.96e-02	5.7	5.7	2.5	2.5	-70.8	-31.4	34.9	-3.02e-02	-7.46e-03	2.61e-03
836	ok	0.24	0.1	2.34e-02	5.7	5.7	2.5	2.5	-55.2	-1.5	-1.4	0.2	6.53e-02	0.3
859	ok	0.24	7.35e-02	1.73e-02	5.7	5.7	2.5	2.5	-39.0	-4.8	-6.5	-0.9	-0.2	0.2
882	ok	0.24	4.79e-02	1.83e-02	5.7	5.7	2.5	2.5	-35.1	-1.4	-9.2	-0.4	-9.91e-02	0.2
913	ok	0.24	3.73e-02	1.62e-02	5.7	5.7	2.5	2.5	-36.6	1.2	-9.0	-2.83e-02	-4.83e-03	0.2
963	ok	0.24	0.2	5.23e-02	5.7	5.7	2.5	2.5	-129.1	-16.9	15.0	-9.18e-02	-1.19e-02	-2.38e-03
1008	ok	0.24	0.1	3.47e-02	5.7	5.7	2.5	2.5	-70.3	-17.0	29.8	-8.70e-02	-1.77e-02	4.70e-04
1053	ok	0.24	0.1	2.33e-02	5.7	5.7	2.5	2.5	-29.3	-13.5	10.4	1.4	0.3	5.16e-02
1098	ok	0.24	5.23e-02	1.79e-02	5.7	5.7	2.5	2.5	-42.6	-4.4	-6.4	-1.0	-0.2	7.55e-02
1143	ok	0.24	3.09e-02	1.78e-02	5.7	5.7	2.5	2.5	-37.0	-1.8	-5.8	-0.5	-9.62e-02	7.12e-02
1188	ok	0.24	2.10e-02	1.38e-02	5.7	5.7	2.5	2.5	-33.4	-1.1	-6.2	4.88e-02	1.02e-02	7.31e-02
1230	ok	0.24	0.1	3.58e-02	5.7	5.7	2.5	2.5	-89.1	-2.4	7.8	-8.26e-03	-8.52e-03	9.87e-04
1253	ok	0.24	0.1	2.97e-02	5.7	5.7	2.5	2.5	-61.1	-10.5	18.5	1.90e-03	5.03e-04	-4.35e-04
1276	ok	0.24	8.83e-02	1.99e-02	5.7	5.7	2.5	2.5	-26.2	-11.7	12.1	1.4	0.3	0.2
1299	ok	0.24	5.33e-02	1.44e-02	5.7	5.7	2.5	2.5	-32.5	-2.3	-7.5	0.9	0.2	0.2
1322	ok	0.24	2.87e-02	1.33e-02	5.7	5.7	2.5	2.5	-29.8	-0.6	-8.9	0.4	9.17e-02	0.2
1353	ok	0.24	1.86e-02	1.28e-02	5.7	5.7	2.5	2.5	-28.0	5.68e-02	-7.4	2.38e-03	-2.83e-03	0.2
1395	ok	0.24	0.1	3.09e-02	5.7	5.7	2.5	2.5	-74.1	-2.6	5.5	-4.75e-02	-3.61e-03	-1.83e-03
1418	ok	0.24	0.1	2.72e-02	5.7	5.7	2.5	2.5	-56.7	-7.6	14.5	-3.40e-02	-6.57e-03	-1.47e-03
1441	ok	0.24	7.92e-02	2.00e-02	5.7	5.7	2.5	2.5	-32.4	-6.3	16.7	-3.09e-02	-5.76e-03	-9.10e-04
1464	ok	0.24	5.59e-02	1.48e-02	5.7	5.7	2.5	2.5	-26.7	-1.7	-9.3	-0.9	-0.2	0.2
1487	ok	0.24	3.86e-02	1.26e-02	5.7	5.7	2.5	2.5	-25.4	-0.3	-10.1	-0.4	-0.1	0.2
1518	ok	0.24	2.18e-02	1.12e-02	5.7	5.7	2.5	2.5	-23.8	0.8	-6.4	-1.85e-02	2.74e-02	0.2
1568	ok	0.24	0.1	3.18e-02	5.7	5.7	2.5	2.5	-52.6	-4.0	3.9	2.4	0.5	1.10e-02
1613	ok	0.24	0.1	2.50e-02	5.7	5.7	2.5	2.5	-40.1	-4.1	6.4	2.0	0.4	7.73e-02
1658	ok	0.24	7.88e-02	1.99e-02	5.7	5.7	2.5	2.5	-32.5	-5.5	16.2	-5.71e-02	-1.28e-02	-3.92e-04
1703	ok	0.24	5.65e-02	1.51e-02	5.7	5.7	2.5	2.5	-28.4	-3.3	-10.2	-1.0	-0.2	6.32e-02
1748	ok	0.24	3.66e-02	1.25e-02	5.7	5.7	2.5	2.5	-26.7	-2.5	-7.3	-0.5	-9.73e-02	5.87e-02
1793	ok	0.24	2.67e-02	9.46e-03	5.7	5.7	2.5	2.5	-23.0	-2.1	-4.0	-5.57e-02	1.43e-03	7.14e-02
1835	ok	0.24	0.1	2.46e-02	5.7	5.7	2.5	2.5	-50.3	0.4	2.2	2.4	0.4	0.1
1858	ok	0.24	0.1	2.19e-02	5.7	5.7	2.5	2.5	-41.7	-2.3	4.8	1.9	0.3	0.2
1881	ok	0.24	8.50e-02	1.51e-02	5.7	5.7	2.5	2.5	-26.1	-5.2	8.5	6.36e-03	-4.47e-05	-8.66e-04
1904	ok	0.24	6.32e-02	1.07e-02	5.7	5.7	2.5	2.5	-18.9	-2.2	-8.3	0.9	0.2	0.2
1927	ok	0.24	4.06e-02	8.86e-03	5.7	5.7	2.5	2.5	-19.0	-1.8	-7.8	0.4	8.66e-02	0.2
1958	ok	0.24	3.06e-02	8.41e-03	5.7	5.7	2.5	2.5	-16.2	4.79e-02	-6.1	2.46e-03	6.05e-04	0.2
2000	ok	0.24	0.1	2.51e-02	5.7	5.7	2.5	2.5	-50.8	0.1	-2.0	-3.57e-02	-2.28e-03	6.89e-03
2023	ok	0.24	0.1	2.08e-02	5.7	5.7	2.5	2.5	-40.5	-4.0	-4.4	-3.20e-02	-6.35e-03	5.75e-03
2046	ok	0.24	9.38e-02	1.38e-02	5.7	5.7	2.5	2.5	-24.0	-5.1	7.6	-3.07e-02	-4.69e-03	-9.25e-04

2069	ok	0.24	6.76e-02	1.02e-02	5.7	5.7	2.5	2.5	-17.4	-2.7	-7.8	-3.57e-02	-2.48e-02	0.2
2092	ok	0.24	3.75e-02	8.07e-03	5.7	5.7	2.5	2.5	-14.8	-0.1	-6.1	-0.4	-6.91e-02	0.2
2123	ok	0.24	3.53e-02	6.84e-03	5.7	5.7	2.5	2.5	-15.5	0.4	-5.3	2.84e-03	3.05e-02	0.2
2173	ok	0.24	0.1	2.85e-02	5.7	5.7	2.5	2.5	-56.6	-4.6	-7.4	-0.1	-1.70e-02	-3.59e-03
2218	ok	0.24	0.1	1.97e-02	5.7	5.7	2.5	2.5	-37.8	-7.1	-8.1	-9.59e-02	-1.89e-02	1.86e-03
2263	ok	0.24	8.82e-02	1.23e-02	5.7	5.7	2.5	2.5	-23.7	-7.0	3.2	-8.09e-02	-1.65e-02	2.51e-03
2308	ok	0.24	6.43e-02	1.03e-02	5.7	5.7	2.5	2.5	-7.4	-2.3	4.5	0.8	0.2	7.02e-02
2353	ok	0.24	4.01e-02	8.38e-03	5.7	5.7	2.5	2.5	-16.3	-2.2	-6.5	-0.5	-9.19e-02	6.15e-02
2398	ok	0.24	3.26e-02	5.10e-03	5.7	5.7	2.5	2.5	-12.0	-1.0	-2.9	-4.69e-02	6.14e-03	7.27e-02
2445	ok	0.24	0.1	3.45e-02	5.7	5.7	2.5	2.5	-68.8	0.9	-8.8	9.76e-03	-4.33e-03	9.93e-03
2468	ok	0.24	0.1	2.49e-02	5.7	5.7	2.5	2.5	-24.1	-13.0	-16.2	8.63e-03	3.55e-03	7.01e-03
2491	ok	0.24	0.1	6.99e-03	5.7	5.7	2.5	2.5	-6.9	-8.7	4.3	9.34e-03	1.30e-03	9.10e-03
2514	ok	0.24	8.30e-02	6.34e-03	5.7	5.7	2.5	2.5	-7.5	-2.3	7.0	0.7	0.2	0.2
2537	ok	0.24	5.27e-02	4.80e-03	5.7	5.7	2.5	2.5	-3.0	-0.9	7.3	0.3	8.72e-02	0.2
2568	ok	0.24	3.25e-02	3.56e-03	5.7	5.7	2.5	2.5	-5.7	0.6	-0.9	-5.40e-02	1.44e-03	0.2
2763	ok	0.24	0.2	8.60e-02	5.7	5.7	2.5	2.5	-152.8	-15.7	-55.2	-8.63e-02	-3.84e-03	3.21e-03
2786	ok	0.24	0.3	2.24e-02	5.7	5.7	2.5	2.5	52.5	-39.9	-1.9	-7.44e-02	-2.00e-02	2.29e-03
2809	ok	0.24	0.2	6.97e-03	5.7	5.7	2.5	2.5	-9.6	-5.0	8.1	-3.04e-02	-5.04e-03	7.28e-04
2832	ok	0.24	7.78e-02	6.57e-03	5.7	5.7	2.5	2.5	-9.4	1.4	7.2	-3.20e-02	-7.01e-03	3.98e-03
2855	ok	0.24	3.68e-02	4.63e-03	5.7	5.7	2.5	2.5	-4.1	-0.2	3.0	-0.4	-6.98e-02	0.1
2886	ok	0.24	3.25e-02	3.22e-03	5.7	5.7	2.5	2.5	-2.8	-2.2	4.7	0.1	5.77e-02	0.2
3073	ok	0.24	0.2	0.1	5.7	5.7	2.5	2.5	-206.2	-49.4	-94.2	-0.1	-1.29e-02	-8.54e-03
3120	ok	0.24	0.5	1.17e-02	5.7	5.7	2.5	2.5	124.2	41.5	46.8	-0.1	-3.26e-02	-7.41e-03
3167	ok	0.24	0.2	5.37e-03	5.7	5.7	2.5	2.5	-7.9	6.9	3.2	-8.54e-02	-1.88e-02	-7.74e-03
3214	ok	0.24	0.1	6.65e-03	5.7	5.7	2.5	2.5	-9.7	2.5	1.6	-5.99e-02	-1.46e-02	-5.93e-03
3261	ok	0.24	4.67e-02	4.96e-03	5.7	5.7	2.5	2.5	-5.4	1.6	-3.4	0.4	0.1	6.08e-02
3308	ok	0.24	1.88e-02	2.03e-03	5.7	5.7	2.5	2.5	-2.1	0.2	3.8	0.1	-3.67e-02	-2.89e-03

Nodo	**x/d**	**V N/M**	**ver. rid**	**Af pr-**	**Af pr+**	**Af sec-**	**Af sec+**	**N z**	**N o**	**N zo**	**M z**	**M o**	**M zo**
								-413.83	-71.65	-94.16	-0.97	-0.20	-0.05
	0.24	0.53	0.18	5.65	5.65	2.51	2.51	124.23	41.50	104.66	2.44	0.49	0.27

Nodo	**Stato**	**Max tau**	**Ver V pr**	**Ver V sec**	**Af V pr**	**Af V sec**	**V pr**	**V sec**
		kN/ m2					kN/ m	kN/ m
300	ok	1.47						
347	ok	1.21						
394	ok	0.79						
441	ok	0.54						
488	ok	0.36						
535	ok	0.61						
625	ok	1.64						
648	ok	1.18						
671	ok	0.91						
694	ok	0.56						
717	ok	0.45						
748	ok	0.61						
790	ok	1.64						
813	ok	1.08						
836	ok	0.90						
859	ok	0.54						
882	ok	0.35						
913	ok	0.37						
963	ok	1.46						
1008	ok	1.10						
1053	ok	0.78						
1098	ok	0.54						
1143	ok	0.30						
1188	ok	0.36						
1230	ok	1.58						
1253	ok	1.11						
1276	ok	0.88						
1299	ok	0.56						
1322	ok	0.34						
1353	ok	0.29						
1395	ok	1.58						
1418	ok	1.10						
1441	ok	0.88						
1464	ok	0.54						
1487	ok	0.35						
1518	ok	0.33						
1568	ok	1.45						
1613	ok	1.09						
1658	ok	0.78						
1703	ok	0.54						
1748	ok	0.30						
1793	ok	0.32						
1835	ok	1.56						

1858	ok	1.11
1881	ok	0.88
1904	ok	0.56
1927	ok	0.33
1958	ok	0.31
2000	ok	1.56
2023	ok	1.09
2046	ok	0.88
2069	ok	0.54
2092	ok	0.34
2123	ok	0.30
2173	ok	1.73
2218	ok	1.09
2263	ok	0.77
2308	ok	0.52
2353	ok	0.30
2398	ok	0.32
2445	ok	1.92
2468	ok	1.10
2491	ok	0.78
2514	ok	0.44
2537	ok	0.26
2568	ok	0.33
2763	ok	2.02
2786	ok	1.09
2809	ok	0.84
2832	ok	0.43
2855	ok	0.26
2886	ok	0.44
3073	ok	2.01
3120	ok	1.15
3167	ok	0.74
3214	ok	0.43
3261	ok	0.26
3308	ok	0.44

Nodo	Max tau	Ver V pr	Ver V sec	Af V pr	Af V sec	V pr	V sec
	2.02						

Macro Setto	Spessore	Id Materiale	Id Criterio	Progettazione
	cm			
14	15.00	1	1	Singolo elemento NON DISSIPATIVO

Nodo	Stato	x/d	V N/M	ver. rid	Af pr-	Af pr+	Af sec-	Af sec+	N z	N o	N zo	M z	M o	M zo
									kN/ m	kN/ m	kN/ m	kN	kN	kN
302	ok	0.24	0.3	0.2	5.7	5.7	2.5	2.5	-399.2	-69.2	101.0	0.2	2.09e-02	-3.23e-02
349	ok	0.24	0.4	2.91e-02	5.7	5.7	2.5	2.5	58.3	9.4	47.4	0.1	2.72e-02	-2.15e-02
396	ok	0.24	0.2	2.36e-02	5.7	5.7	2.5	2.5	-47.8	-12.1	-18.3	0.1	2.71e-02	-2.64e-03
443	ok	0.24	0.1	1.93e-02	5.7	5.7	2.5	2.5	-41.7	-7.0	5.8	1.3	0.3	-5.24e-02
490	ok	0.24	8.06e-02	1.95e-02	5.7	5.7	2.5	2.5	-33.1	-6.9	-9.5	0.6	0.1	-4.83e-02
537	ok	0.24	4.46e-02	2.64e-02	5.7	5.7	2.5	2.5	-43.8	-12.7	-19.1	6.68e-02	-4.14e-03	-2.52e-02
626	ok	0.24	0.5	0.1	5.7	5.7	2.5	2.5	-325.3	-38.5	55.9	0.1	5.18e-03	7.21e-03
649	ok	0.24	0.3	4.82e-02	5.7	5.7	2.5	2.5	-50.2	-44.6	36.1	4.67e-02	6.03e-03	2.58e-03
672	ok	0.24	0.1	2.17e-02	5.7	5.7	2.5	2.5	-49.8	-4.2	-4.0	0.3	3.76e-02	0.2
695	ok	0.24	7.57e-02	1.79e-02	5.7	5.7	2.5	2.5	-42.8	-7.1	-4.8	1.3	0.3	0.1
718	ok	0.24	3.64e-02	1.81e-02	5.7	5.7	2.5	2.5	-31.7	-4.4	-0.3	0.6	0.1	0.1
750	ok	0.24	4.13e-02	2.15e-02	5.7	5.7	2.5	2.5	-42.0	-11.2	-12.5	2.79e-02	-7.62e-02	0.2
791	ok	0.24	0.2	7.88e-02	5.7	5.7	2.5	2.5	-191.7	-20.6	31.8	-1.20e-02	3.58e-04	1.24e-02
814	ok	0.24	0.1	3.80e-02	5.7	5.7	2.5	2.5	-68.3	-30.5	33.6	-2.96e-02	-8.48e-03	8.99e-03
837	ok	0.24	0.1	2.33e-02	5.7	5.7	2.5	2.5	-54.7	-1.1	-1.8	0.2	6.56e-02	0.3
860	ok	0.24	7.38e-02	1.72e-02	5.7	5.7	2.5	2.5	-38.9	-4.6	-6.5	-0.9	-0.2	0.2
883	ok	0.24	4.69e-02	1.82e-02	5.7	5.7	2.5	2.5	-35.0	-1.3	-9.1	-0.4	-9.95e-02	0.2
915	ok	0.24	3.55e-02	1.62e-02	5.7	5.7	2.5	2.5	-36.6	1.2	-8.9	-3.59e-02	-8.47e-03	0.2
965	ok	0.24	0.2	5.06e-02	5.7	5.7	2.5	2.5	-125.2	-16.5	14.5	-0.1	-1.28e-02	1.65e-03
1010	ok	0.24	0.1	3.34e-02	5.7	5.7	2.5	2.5	-67.8	-16.5	28.6	-8.52e-02	-1.52e-02	1.75e-03
1055	ok	0.24	9.97e-02	2.27e-02	5.7	5.7	2.5	2.5	-19.3	-10.6	29.3	-6.61e-02	-1.28e-02	-1.78e-04
1100	ok	0.24	5.22e-02	1.78e-02	5.7	5.7	2.5	2.5	-41.5	-2.0	-8.9	-1.0	-0.2	7.35e-02
1145	ok	0.24	3.09e-02	1.77e-02	5.7	5.7	2.5	2.5	-28.8	-2.8	-11.0	0.4	9.93e-02	6.34e-02
1190	ok	0.24	2.05e-02	1.38e-02	5.7	5.7	2.5	2.5	-33.3	-1.0	-6.2	3.99e-02	5.11e-03	7.42e-02
1231	ok	0.24	0.1	3.45e-02	5.7	5.7	2.5	2.5	-85.8	-2.4	7.6	-1.51e-02	-7.60e-03	-2.28e-03
1254	ok	0.24	0.1	2.86e-02	5.7	5.7	2.5	2.5	-58.6	-10.2	18.1	-4.47e-03	1.63e-03	-2.12e-03
1277	ok	0.24	9.02e-02	1.93e-02	5.7	5.7	2.5	2.5	-29.8	-8.4	16.7	-2.55e-03	3.96e-03	-2.77e-03
1300	ok	0.24	5.41e-02	1.42e-02	5.7	5.7	2.5	2.5	-32.3	-2.2	-7.5	0.9	0.2	0.2

1323	ok	0.24	2.91e-02	1.32e-02	5.7	5.7	2.5	2.5	-29.7	-0.6	-8.9	0.4	9.15e-02	0.2
1355	ok	0.24	1.90e-02	1.28e-02	5.7	5.7	2.5	2.5	-28.0	6.72e-02	-7.3	-2.63e-05	-6.76e-03	0.2
1396	ok	0.24	0.1	2.97e-02	5.7	5.7	2.5	2.5	-71.3	-2.5	5.4	-3.87e-02	-9.27e-04	1.19e-03
1419	ok	0.24	0.1	2.62e-02	5.7	5.7	2.5	2.5	-54.3	-7.3	14.2	-2.30e-02	-1.93e-03	-3.17e-03
1442	ok	0.24	7.96e-02	1.95e-02	5.7	5.7	2.5	2.5	-31.3	-6.0	16.4	-2.15e-02	-2.30e-03	-2.64e-03
1465	ok	0.24	5.67e-02	1.46e-02	5.7	5.7	2.5	2.5	-26.4	-1.6	-9.4	-0.9	-0.2	0.2
1488	ok	0.24	3.89e-02	1.26e-02	5.7	5.7	2.5	2.5	-25.3	-0.3	-10.1	-0.4	-0.1	0.2
1520	ok	0.24	2.31e-02	1.12e-02	5.7	5.7	2.5	2.5	-23.8	0.8	-6.4	-2.75e-02	1.94e-02	0.2
1570	ok	0.24	0.1	3.07e-02	5.7	5.7	2.5	2.5	-49.9	-3.9	4.0	2.4	0.5	1.23e-02
1615	ok	0.24	0.1	2.40e-02	5.7	5.7	2.5	2.5	-37.9	-3.9	6.7	1.9	0.4	7.72e-02
1660	ok	0.24	7.99e-02	1.93e-02	5.7	5.7	2.5	2.5	-31.3	-5.2	16.0	-3.27e-02	-6.29e-03	-6.65e-04
1705	ok	0.24	5.80e-02	1.49e-02	5.7	5.7	2.5	2.5	-28.0	-3.1	-10.3	-1.0	-0.2	6.29e-02
1750	ok	0.24	3.84e-02	1.25e-02	5.7	5.7	2.5	2.5	-26.6	-2.4	-7.4	-0.5	-9.68e-02	5.83e-02
1795	ok	0.24	2.69e-02	9.45e-03	5.7	5.7	2.5	2.5	-22.9	-2.1	-4.0	-4.23e-02	-2.32e-03	7.25e-02
1836	ok	0.24	0.1	2.33e-02	5.7	5.7	2.5	2.5	-47.4	0.4	2.3	2.4	0.4	0.1
1859	ok	0.24	0.1	2.08e-02	5.7	5.7	2.5	2.5	-39.4	-2.2	5.2	1.9	0.3	0.2
1882	ok	0.24	8.93e-02	1.46e-02	5.7	5.7	2.5	2.5	-24.9	-4.7	8.9	-5.61e-03	-1.11e-03	-3.06e-03
1905	ok	0.24	6.64e-02	1.05e-02	5.7	5.7	2.5	2.5	-18.6	-2.1	-8.3	0.9	0.2	0.2
1928	ok	0.24	4.26e-02	8.86e-03	5.7	5.7	2.5	2.5	-18.9	-1.7	-7.9	0.4	8.64e-02	0.2
1960	ok	0.24	3.18e-02	8.42e-03	5.7	5.7	2.5	2.5	-16.2	8.05e-02	-6.1	-3.40e-04	-5.39e-03	0.2
2001	ok	0.24	0.1	2.35e-02	5.7	5.7	2.5	2.5	-47.7	7.33e-02	-2.0	-1.59e-02	-7.93e-04	4.80e-03
2024	ok	0.24	0.1	1.96e-02	5.7	5.7	2.5	2.5	-38.4	-3.7	-3.6	-1.29e-02	9.29e-04	3.42e-03
2047	ok	0.24	9.39e-02	1.34e-02	5.7	5.7	2.5	2.5	-21.7	-4.3	7.5	-1.4	-0.3	0.2
2070	ok	0.24	6.76e-02	1.01e-02	5.7	5.7	2.5	2.5	-15.4	-2.5	9.6	-0.9	-0.2	0.2
2093	ok	0.24	3.73e-02	8.04e-03	5.7	5.7	2.5	2.5	-14.7	1.54e-02	-6.1	-0.4	-6.35e-02	0.2
2125	ok	0.24	3.64e-02	6.86e-03	5.7	5.7	2.5	2.5	-12.3	0.8	-4.8	-1.95e-02	2.22e-02	0.2
2175	ok	0.24	0.1	2.65e-02	5.7	5.7	2.5	2.5	-36.0	-2.8	-7.0	2.3	0.4	0.1
2220	ok	0.24	0.1	1.85e-02	5.7	5.7	2.5	2.5	-17.5	-3.2	-8.1	1.7	0.3	0.1
2265	ok	0.24	8.89e-02	1.19e-02	5.7	5.7	2.5	2.5	-20.5	-3.6	6.1	-1.4	-0.3	6.00e-02
2310	ok	0.24	6.40e-02	1.02e-02	5.7	5.7	2.5	2.5	-15.5	-1.9	12.1	-0.9	-0.2	6.91e-02
2355	ok	0.24	3.99e-02	8.32e-03	5.7	5.7	2.5	2.5	-16.1	-2.0	-6.6	-0.4	-8.39e-02	6.21e-02
2400	ok	0.24	3.27e-02	5.10e-03	5.7	5.7	2.5	2.5	-11.9	-1.0	-3.1	-3.50e-02	-1.33e-04	7.35e-02
2446	ok	0.24	0.1	3.02e-02	5.7	5.7	2.5	2.5	-63.8	-5.3	-11.4	-1.6	-0.3	0.3
2469	ok	0.24	0.1	2.10e-02	5.7	5.7	2.5	2.5	-7.8	-9.8	-21.3	-0.9	-0.2	0.2
2492	ok	0.24	0.1	6.54e-03	5.7	5.7	2.5	2.5	-7.8	-7.3	4.4	2.53e-03	-5.83e-03	1.94e-03
2515	ok	0.24	8.16e-02	6.24e-03	5.7	5.7	2.5	2.5	-7.5	-2.0	6.7	0.7	0.2	0.2
2538	ok	0.24	5.11e-02	4.69e-03	5.7	5.7	2.5	2.5	-2.9	-0.8	6.9	0.3	8.91e-02	0.2
2570	ok	0.24	3.09e-02	3.56e-03	5.7	5.7	2.5	2.5	-5.6	0.6	-1.1	-5.83e-02	-4.24e-03	0.2
2764	ok	0.24	0.3	7.27e-02	5.7	5.7	2.5	2.5	-141.6	-24.6	-46.5	-4.6	-0.7	-9.59e-02
2787	ok	0.24	0.3	1.85e-02	5.7	5.7	2.5	2.5	30.8	-2.9	10.3	-2.8	-0.6	-2.20e-02
2810	ok	0.24	0.2	7.01e-03	5.7	5.7	2.5	2.5	-10.3	-5.8	8.7	-1.9	-0.4	6.26e-03
2833	ok	0.24	7.76e-02	6.40e-03	5.7	5.7	2.5	2.5	-9.5	1.2	6.7	-2.15e-02	-3.48e-03	1.57e-03
2856	ok	0.24	3.58e-02	4.51e-03	5.7	5.7	2.5	2.5	-3.8	1.6	-2.0	0.4	5.70e-02	-9.67e-02
2888	ok	0.24	3.12e-02	3.11e-03	5.7	5.7	2.5	2.5	-2.7	-2.2	4.3	0.1	5.09e-02	0.2
3075	ok	0.24	0.3	0.1	5.7	5.7	2.5	2.5	-173.5	-41.0	-78.7	0.4	4.46e-02	0.1
3122	ok	0.24	0.5	1.36e-02	5.7	5.7	2.5	2.5	24.9	17.2	2.5	-2.9	-0.7	-0.2
3169	ok	0.24	0.2	5.48e-03	5.7	5.7	2.5	2.5	-2.1	6.5	12.8	-1.9	-0.5	-0.1
3216	ok	0.24	0.1	6.55e-03	5.7	5.7	2.5	2.5	-8.8	2.5	8.0	-3.24e-02	-6.59e-03	-4.47e-03
3263	ok	0.24	4.47e-02	4.87e-03	5.7	5.7	2.5	2.5	-5.5	1.4	-3.3	0.4	0.1	6.11e-02
3310	ok	0.24	1.90e-02	1.56e-03	5.7	5.7	2.5	2.5	-0.6	0.3	3.6	2.12e-03	-3.82e-02	-2.08e-03

Nodo	**x/d**	**V N/M**	**ver. rid**	**Af pr-**	**Af pr+**	**Af sec-**	**Af sec+**	**N z**	**N o**	**N zo**	**M z**	**M o**	**M zo**
								-399.24	-69.16	-78.72	-4.55	-0.74	-0.21
	0.24	0.53	0.17	5.65	5.65	2.51	2.51	58.29	17.22	100.96	2.41	0.48	0.34

Nodo	**Stato**	**Max tau**	**Ver V pr**	**Ver V sec**	**Af V pr**	**Af V sec**	**V pr**	**V sec**
		kN/ m2					kN/ m	kN/ m
302	ok	1.51						
349	ok	1.21						
396	ok	0.79						
443	ok	0.54						
490	ok	0.36						
537	ok	0.60						
626	ok	1.65						
649	ok	1.19						
672	ok	0.91						
695	ok	0.56						
718	ok	0.44						
750	ok	0.62						
791	ok	1.65						
814	ok	1.09						
837	ok	0.91						
860	ok	0.54						
883	ok	0.35						
915	ok	0.38						
965	ok	1.48						
1010	ok	1.10						

1055	ok	0.78
1100	ok	0.54
1145	ok	0.30
1190	ok	0.35
1231	ok	1.58
1254	ok	1.11
1277	ok	0.89
1300	ok	0.56
1323	ok	0.34
1355	ok	0.29
1396	ok	1.58
1419	ok	1.10
1442	ok	0.89
1465	ok	0.54
1488	ok	0.35
1520	ok	0.33
1570	ok	1.45
1615	ok	1.09
1660	ok	0.78
1705	ok	0.54
1750	ok	0.30
1795	ok	0.31
1836	ok	1.56
1859	ok	1.11
1882	ok	0.88
1905	ok	0.56
1928	ok	0.33
1960	ok	0.31
2001	ok	1.56
2024	ok	1.09
2047	ok	0.88
2070	ok	0.53
2093	ok	0.34
2125	ok	0.30
2175	ok	1.74
2220	ok	1.09
2265	ok	0.77
2310	ok	0.51
2355	ok	0.30
2400	ok	0.33
2446	ok	1.91
2469	ok	1.09
2492	ok	0.78
2515	ok	0.44
2538	ok	0.27
2570	ok	0.33
2764	ok	2.07
2787	ok	1.09
2810	ok	0.84
2833	ok	0.43
2856	ok	0.26
2888	ok	0.44
3075	ok	2.08
3122	ok	1.18
3169	ok	0.74
3216	ok	0.43
3263	ok	0.26
3310	ok	0.44

Nodo	Max tau	Ver V pr	Ver V sec	Af V pr	Af V sec	V pr	V sec
	2.08						

Macro Setto	Spessore	Id Materiale	Id Criterio	Progettazione
	cm			
15	15.00	1	1	Singolo elemento NON DISSIPATIVO

Nodo	Stato	x/d	V N/M	ver. rid	Af pr-	Af pr+	Af sec-	Af sec+	N z	N o	N zo	M z	M o	M zo
									kN/ m	kN/ m	kN/ m	kN	kN	kN
304	ok	0.24	0.3	0.2	5.7	5.7	2.5	2.5	-368.6	-64.0	93.1	-3.0	-0.4	5.14e-04
351	ok	0.24	0.3	2.98e-02	5.7	5.7	2.5	2.5	-66.8	-15.6	4.2	2.6	0.6	-6.03e-02
398	ok	0.24	0.2	2.33e-02	5.7	5.7	2.5	2.5	-49.9	-12.7	-18.7	1.9	0.5	-3.44e-02
445	ok	0.24	0.1	1.96e-02	5.7	5.7	2.5	2.5	-41.9	-7.3	5.9	1.3	0.3	-5.22e-02
492	ok	0.24	7.87e-02	1.96e-02	5.7	5.7	2.5	2.5	-33.3	-7.1	-9.6	0.6	0.1	-4.74e-02

539	ok	0.24	4.40e-02	2.63e-02	5.7	5.7	2.5	2.5	-43.6	-12.7	-19.0	4.99e-02	-2.22e-03	-2.27e-02
627	ok	0.24	0.5	0.1	5.7	5.7	2.5	2.5	-305.0	-37.8	53.2	-3.2	-0.5	-0.2
650	ok	0.24	0.3	4.28e-02	5.7	5.7	2.5	2.5	-65.5	3.8	-1.5	2.6	0.6	0.1
673	ok	0.24	0.1	2.17e-02	5.7	5.7	2.5	2.5	-50.6	12.0	-6.6	1.9	0.4	0.2
696	ok	0.24	7.32e-02	1.80e-02	5.7	5.7	2.5	2.5	-43.0	-6.9	-4.8	1.3	0.3	0.1
719	ok	0.24	3.64e-02	1.80e-02	5.7	5.7	2.5	2.5	-31.9	-4.2	-0.2	0.6	0.1	0.1
752	ok	0.24	3.67e-02	2.13e-02	5.7	5.7	2.5	2.5	-42.0	-11.1	-12.2	3.44e-02	-7.03e-02	0.2
792	ok	0.24	0.2	7.38e-02	5.7	5.7	2.5	2.5	-179.3	-20.0	30.3	3.43e-03	1.06e-03	1.01e-02
815	ok	0.24	0.1	3.45e-02	5.7	5.7	2.5	2.5	-63.2	-28.6	30.6	-1.30e-02	-6.29e-03	8.42e-03
838	ok	0.24	0.1	2.32e-02	5.7	5.7	2.5	2.5	-53.9	-0.4	-2.8	0.2	6.65e-02	0.3
861	ok	0.24	7.42e-02	1.72e-02	5.7	5.7	2.5	2.5	-38.9	-4.2	-6.8	-0.9	-0.2	0.2
884	ok	0.24	4.52e-02	1.82e-02	5.7	5.7	2.5	2.5	-35.1	-1.3	-9.0	-0.4	-9.97e-02	0.2
917	ok	0.24	3.31e-02	1.62e-02	5.7	5.7	2.5	2.5	-36.6	1.3	-8.6	-3.88e-02	-9.86e-03	0.2
967	ok	0.24	0.2	4.74e-02	5.7	5.7	2.5	2.5	-117.2	-15.8	13.6	-0.1	-1.23e-02	7.40e-03
1012	ok	0.24	0.1	3.04e-02	5.7	5.7	2.5	2.5	-62.7	-15.4	26.1	-4.71e-02	-8.60e-03	4.44e-03
1057	ok	0.24	9.75e-02	2.15e-02	5.7	5.7	2.5	2.5	-44.0	-2.2	-8.0	-1.4	-0.3	6.23e-02
1102	ok	0.24	5.18e-02	1.78e-02	5.7	5.7	2.5	2.5	-41.1	-1.7	-9.0	-0.9	-0.2	7.31e-02
1147	ok	0.24	2.99e-02	1.77e-02	5.7	5.7	2.5	2.5	-28.8	-2.6	-11.0	0.4	9.55e-02	6.28e-02
1192	ok	0.24	1.99e-02	1.38e-02	5.7	5.7	2.5	2.5	-33.4	-1.0	-6.2	2.76e-02	3.91e-03	7.49e-02
1232	ok	0.24	0.1	3.20e-02	5.7	5.7	2.5	2.5	-79.5	-2.3	7.4	-1.23e-02	-4.34e-03	-2.09e-03
1255	ok	0.24	0.1	2.63e-02	5.7	5.7	2.5	2.5	-53.8	-9.6	17.3	-2.88e-02	-3.90e-03	-4.20e-03
1278	ok	0.24	9.26e-02	1.82e-02	5.7	5.7	2.5	2.5	-27.8	-7.8	16.1	-9.82e-03	2.12e-03	-5.65e-03
1301	ok	0.24	5.50e-02	1.40e-02	5.7	5.7	2.5	2.5	-31.9	-1.9	-7.8	0.9	0.2	0.2
1324	ok	0.24	2.97e-02	1.32e-02	5.7	5.7	2.5	2.5	-29.7	-0.5	-9.0	0.4	9.13e-02	0.2
1357	ok	0.24	1.91e-02	1.29e-02	5.7	5.7	2.5	2.5	-28.2	0.1	-7.4	-1.09e-03	-6.21e-03	0.2
1397	ok	0.24	0.1	2.72e-02	5.7	5.7	2.5	2.5	-65.5	-2.4	5.2	-2.92e-02	-1.29e-03	-2.76e-03
1420	ok	0.24	0.1	2.40e-02	5.7	5.7	2.5	2.5	-49.5	-6.9	13.7	-1.42e-02	-1.64e-04	-5.72e-03
1443	ok	0.24	7.96e-02	1.82e-02	5.7	5.7	2.5	2.5	-29.3	-5.4	15.9	-1.43e-02	-8.29e-04	-5.73e-03
1466	ok	0.24	5.74e-02	1.42e-02	5.7	5.7	2.5	2.5	-25.9	-1.3	-9.6	-0.9	-0.2	0.2
1489	ok	0.24	3.92e-02	1.26e-02	5.7	5.7	2.5	2.5	-25.2	-0.1	-10.2	-0.4	-0.1	0.2
1522	ok	0.24	2.40e-02	1.12e-02	5.7	5.7	2.5	2.5	-23.9	0.9	-6.5	-2.91e-02	1.84e-02	0.2
1572	ok	0.24	0.1	2.83e-02	5.7	5.7	2.5	2.5	-44.5	-3.5	4.2	2.4	0.5	1.55e-02
1617	ok	0.24	0.1	2.20e-02	5.7	5.7	2.5	2.5	-33.1	-3.4	7.5	1.9	0.4	7.68e-02
1662	ok	0.24	8.65e-02	1.81e-02	5.7	5.7	2.5	2.5	-28.8	-4.6	15.7	-2.33e-03	-3.01e-04	-5.34e-04
1707	ok	0.24	6.22e-02	1.44e-02	5.7	5.7	2.5	2.5	-27.5	-2.9	-10.7	-0.9	-0.2	6.32e-02
1752	ok	0.24	4.18e-02	1.25e-02	5.7	5.7	2.5	2.5	-26.4	-2.2	-7.6	-0.4	-9.49e-02	5.70e-02
1797	ok	0.24	2.67e-02	9.46e-03	5.7	5.7	2.5	2.5	-22.9	-2.1	-4.2	-3.10e-02	-6.67e-04	7.32e-02
1837	ok	0.24	0.1	2.05e-02	5.7	5.7	2.5	2.5	-41.6	0.4	2.6	2.4	0.4	0.1
1860	ok	0.24	0.1	1.86e-02	5.7	5.7	2.5	2.5	-34.5	-2.0	6.1	1.9	0.3	0.2
1883	ok	0.24	9.67e-02	1.36e-02	5.7	5.7	2.5	2.5	-22.4	-3.7	9.9	-2.02e-02	-3.92e-03	-5.17e-03
1906	ok	0.24	6.97e-02	1.02e-02	5.7	5.7	2.5	2.5	-18.3	-1.8	-8.3	0.9	0.2	0.2
1929	ok	0.24	4.52e-02	8.89e-03	5.7	5.7	2.5	2.5	-18.8	-1.4	-8.1	0.4	8.67e-02	0.2
1962	ok	0.24	3.26e-02	8.49e-03	5.7	5.7	2.5	2.5	-16.3	0.2	-6.2	-1.33e-03	-5.87e-03	0.2
2002	ok	0.24	0.1	2.02e-02	5.7	5.7	2.5	2.5	-40.9	-1.78e-03	-1.9	-4.25e-03	4.95e-05	1.88e-03
2025	ok	0.24	0.1	1.71e-02	5.7	5.7	2.5	2.5	-29.5	-1.4	7.0	-1.19e-02	8.74e-04	-2.01e-03
2048	ok	0.24	9.38e-02	1.26e-02	5.7	5.7	2.5	2.5	-20.7	-1.9	10.4	-8.19e-03	6.51e-05	-2.29e-03
2071	ok	0.24	6.83e-02	9.93e-03	5.7	5.7	2.5	2.5	-16.8	-2.2	-8.0	-2.32e-02	-2.25e-02	0.2
2094	ok	0.24	3.92e-02	8.05e-03	5.7	5.7	2.5	2.5	-17.3	-1.8	-7.0	-1.31e-02	-2.09e-02	0.2
2127	ok	0.24	3.68e-02	6.95e-03	5.7	5.7	2.5	2.5	-15.5	0.4	-5.6	2.35e-03	2.08e-02	0.2
2177	ok	0.24	0.2	2.24e-02	5.7	5.7	2.5	2.5	-34.0	-3.6	-8.1	2.3	0.4	0.1
2222	ok	0.24	0.1	1.57e-02	5.7	5.7	2.5	2.5	-14.2	-2.3	-6.6	1.7	0.3	0.1
2267	ok	0.24	9.18e-02	1.17e-02	5.7	5.7	2.5	2.5	-13.6	-1.5	3.8	1.2	0.2	8.50e-02
2312	ok	0.24	6.56e-02	1.01e-02	5.7	5.7	2.5	2.5	-7.1	0.2	8.7	0.7	0.1	7.62e-02
2357	ok	0.24	4.13e-02	8.24e-03	5.7	5.7	2.5	2.5	-16.1	-1.7	-7.0	-0.4	-8.04e-02	6.16e-02
2402	ok	0.24	3.20e-02	5.12e-03	5.7	5.7	2.5	2.5	-9.2	3.47e-02	-1.8	7.09e-03	2.85e-03	7.25e-02
2447	ok	0.24	0.2	2.66e-02	5.7	5.7	2.5	2.5	-40.8	-3.9	-10.0	2.4	0.5	0.3
2470	ok	0.24	0.1	1.30e-02	5.7	5.7	2.5	2.5	-14.2	-11.9	-10.0	1.8	0.4	0.3
2493	ok	0.24	0.1	6.34e-03	5.7	5.7	2.5	2.5	-11.8	-1.2	6.5	1.2	0.3	0.2
2516	ok	0.24	8.18e-02	6.09e-03	5.7	5.7	2.5	2.5	-7.7	1.4	8.1	0.7	0.2	0.2
2539	ok	0.24	4.98e-02	4.53e-03	5.7	5.7	2.5	2.5	-2.8	-0.7	6.6	0.3	8.92e-02	0.2
2572	ok	0.24	2.97e-02	3.61e-03	5.7	5.7	2.5	2.5	-8.5	0.3	-2.1	-9.18e-03	-6.83e-03	0.2
2765	ok	0.24	0.3	5.69e-02	5.7	5.7	2.5	2.5	-128.2	-26.4	-39.4	-4.5	-0.7	-8.43e-02
2788	ok	0.24	0.3	1.64e-02	5.7	5.7	2.5	2.5	33.2	-1.9	9.9	-2.8	-0.6	-1.73e-02
2811	ok	0.24	0.1	7.85e-03	5.7	5.7	2.5	2.5	-11.5	-7.1	9.5	-1.9	-0.4	7.45e-03
2834	ok	0.24	7.77e-02	6.14e-03	5.7	5.7	2.5	2.5	-9.6	0.9	5.8	-8.45e-03	-1.18e-03	-9.27e-05
2857	ok	0.24	3.67e-02	4.33e-03	5.7	5.7	2.5	2.5	-4.0	1.5	-2.3	0.4	6.05e-02	-9.87e-02
2890	ok	0.24	3.00e-02	2.93e-03	5.7	5.7	2.5	2.5	-2.6	-2.1	3.9	0.1	4.40e-02	0.1
3077	ok	0.24	0.3	6.69e-02	5.7	5.7	2.5	2.5	-146.0	-34.7	-51.6	-4.3	-0.8	-0.4
3124	ok	0.24	0.4	1.67e-02	5.7	5.7	2.5	2.5	32.4	17.3	4.8	-2.8	-0.7	-0.2
3171	ok	0.24	0.2	5.89e-03	5.7	5.7	2.5	2.5	-5.5	5.9	12.0	-1.9	-0.5	-0.1
3218	ok	0.24	9.54e-02	6.44e-03	5.7	5.7	2.5	2.5	-9.0	1.8	7.4	-9.52e-03	-1.30e-03	-1.83e-03
3265	ok	0.24	4.26e-02	4.75e-03	5.7	5.7	2.5	2.5	-5.6	1.0	-3.6	0.4	0.2	6.30e-02
3312	ok	0.24	1.74e-02	1.38e-03	5.7	5.7	2.5	2.5	-0.4	0.5	3.4	9.65e-03	-4.12e-02	-5.33e-04

Nodo		**x/d**	**V N/M**	**ver. rid**	**Af pr-**	**Af pr+**	**Af sec-**	**Af sec+**	**N z**	**N o**	**N zo**	**M z**	**M o**	**M zo**
									-368.65	-64.03	-51.56	-4.47	-0.76	-0.35
		0.24	0.53	0.16	5.65	5.65	2.51	2.51	33.21	17.29	93.12	2.63	0.60	0.28

Nodo	Stato	Max tau	Ver V pr	Ver V sec	Af V pr	Af V sec	V pr	V sec
		kN/ m2					kN/ m	kN/ m
304	ok	1.51						
351	ok	1.21						
398	ok	0.79						
445	ok	0.53						
492	ok	0.36						
539	ok	0.59						
627	ok	1.65						
650	ok	1.18						
673	ok	0.91						
696	ok	0.56						
719	ok	0.44						
752	ok	0.62						
792	ok	1.65						
815	ok	1.09						
838	ok	0.90						
861	ok	0.54						
884	ok	0.35						
917	ok	0.38						
967	ok	1.48						
1012	ok	1.10						
1057	ok	0.77						
1102	ok	0.53						
1147	ok	0.30						
1192	ok	0.35						
1232	ok	1.58						
1255	ok	1.12						
1278	ok	0.88						
1301	ok	0.55						
1324	ok	0.34						
1357	ok	0.29						
1397	ok	1.58						
1420	ok	1.10						
1443	ok	0.88						
1466	ok	0.53						
1489	ok	0.35						
1522	ok	0.33						
1572	ok	1.45						
1617	ok	1.09						
1662	ok	0.77						
1707	ok	0.53						
1752	ok	0.30						
1797	ok	0.30						
1837	ok	1.57						
1860	ok	1.11						
1883	ok	0.88						
1906	ok	0.55						
1929	ok	0.32						
1962	ok	0.30						
2002	ok	1.57						
2025	ok	1.09						
2048	ok	0.88						
2071	ok	0.53						
2094	ok	0.34						
2127	ok	0.30						
2177	ok	1.75						
2222	ok	1.09						
2267	ok	0.76						
2312	ok	0.51						
2357	ok	0.30						
2402	ok	0.32						
2447	ok	1.92						
2470	ok	1.10						
2493	ok	0.78						
2516	ok	0.44						
2539	ok	0.26						
2572	ok	0.33						
2765	ok	2.07						
2788	ok	1.10						
2811	ok	0.84						
2834	ok	0.43						
2857	ok	0.26						
2890	ok	0.44						
3077	ok	2.09						
3124	ok	1.19						
3171	ok	0.73						
3218	ok	0.43						

3265	ok	0.26
3312	ok	0.43

Nodo	Max tau	Ver V pr	Ver V sec	Af V pr	Af V sec	V pr	V sec
	2.09						

Macro Setto	Spessore	Id Materiale	Id Criterio	Progettazione
	cm			
16	15.00	1	1	Singolo elemento NON DISSIPATIVO

Nodo	Stato	x/d	V N/M	ver. rid	Af pr-	Af pr+	Af sec-	Af sec+	N z	N o	N zo	M z	M o	M zo
									kN/ m	kN/ m	kN/ m	kN	kN	kN
308	ok	0.24	0.3	0.2	5.7	5.7	2.5	2.5	-370.1	-64.2	93.5	2.9	0.4	2.51e-03
355	ok	0.24	0.3	2.98e-02	5.7	5.7	2.5	2.5	-66.9	-15.6	4.2	-2.7	-0.6	6.16e-02
402	ok	0.24	0.2	2.33e-02	5.7	5.7	2.5	2.5	-49.9	-12.7	-18.8	-2.0	-0.5	3.57e-02
449	ok	0.24	0.1	1.96e-02	5.7	5.7	2.5	2.5	-41.9	-7.3	5.9	-1.3	-0.3	5.24e-02
496	ok	0.24	7.86e-02	1.96e-02	5.7	5.7	2.5	2.5	-33.3	-7.1	-9.6	-0.6	-0.1	4.77e-02
543	ok	0.24	4.40e-02	2.63e-02	5.7	5.7	2.5	2.5	-43.6	-12.7	-19.1	-4.78e-02	2.95e-03	2.35e-02
629	ok	0.24	0.5	0.1	5.7	5.7	2.5	2.5	-306.1	-37.8	53.3	3.1	0.5	0.1
652	ok	0.24	0.3	4.29e-02	5.7	5.7	2.5	2.5	-65.6	3.8	-1.4	-2.6	-0.6	-0.1
675	ok	0.24	0.1	2.17e-02	5.7	5.7	2.5	2.5	-50.6	12.0	-6.7	-1.9	-0.4	-0.2
698	ok	0.24	7.30e-02	1.81e-02	5.7	5.7	2.5	2.5	-43.0	-6.9	-4.9	-1.2	-0.3	-0.1
721	ok	0.24	3.66e-02	1.81e-02	5.7	5.7	2.5	2.5	-31.9	-4.2	-0.2	-0.6	-0.1	-0.1
756	ok	0.24	3.67e-02	2.13e-02	5.7	5.7	2.5	2.5	-42.0	-11.1	-12.3	-3.43e-02	7.32e-02	-0.2
794	ok	0.24	0.2	7.41e-02	5.7	5.7	2.5	2.5	-180.1	-20.1	30.4	0.4	0.2	0.3
817	ok	0.24	0.1	3.47e-02	5.7	5.7	2.5	2.5	-53.3	-6.4	42.8	0.3	0.1	0.2
840	ok	0.24	0.1	2.32e-02	5.7	5.7	2.5	2.5	-54.0	-0.4	-2.8	-0.2	-6.56e-02	-0.3
863	ok	0.24	7.45e-02	1.72e-02	5.7	5.7	2.5	2.5	-38.9	-4.2	-6.9	0.9	0.2	-0.2
886	ok	0.24	4.50e-02	1.82e-02	5.7	5.7	2.5	2.5	-35.1	-1.3	-9.1	0.4	0.1	-0.2
921	ok	0.24	3.30e-02	1.62e-02	5.7	5.7	2.5	2.5	-36.6	1.3	-8.8	3.92e-02	8.08e-03	-0.2
971	ok	0.24	0.2	4.77e-02	5.7	5.7	2.5	2.5	-117.8	-15.9	13.6	0.1	1.37e-02	-5.97e-03
1016	ok	0.24	0.1	3.06e-02	5.7	5.7	2.5	2.5	-63.1	-15.5	26.1	9.43e-02	1.79e-02	-5.65e-03
1061	ok	0.24	9.62e-02	2.15e-02	5.7	5.7	2.5	2.5	-44.1	-2.2	-7.9	1.5	0.3	-6.42e-02
1106	ok	0.24	5.25e-02	1.78e-02	5.7	5.7	2.5	2.5	-41.9	-3.9	-7.1	1.0	0.2	-7.57e-02
1151	ok	0.24	2.96e-02	1.78e-02	5.7	5.7	2.5	2.5	-36.8	-1.6	-5.9	0.4	9.48e-02	-7.00e-02
1196	ok	0.24	1.99e-02	1.38e-02	5.7	5.7	2.5	2.5	-33.3	-1.0	-6.3	-2.86e-02	-2.59e-03	-7.46e-02
1234	ok	0.24	0.1	3.22e-02	5.7	5.7	2.5	2.5	-80.1	-2.3	7.5	2.82e-02	1.06e-02	2.78e-05
1257	ok	0.24	0.1	2.65e-02	5.7	5.7	2.5	2.5	-54.2	-9.7	17.3	1.03e-02	2.31e-04	3.42e-04
1280	ok	0.24	9.17e-02	1.82e-02	5.7	5.7	2.5	2.5	-28.1	-7.8	16.1	-1.54e-04	-4.03e-03	1.37e-03
1303	ok	0.24	5.49e-02	1.40e-02	5.7	5.7	2.5	2.5	-31.9	-1.9	-7.8	-0.9	-0.2	-0.2
1326	ok	0.24	3.00e-02	1.32e-02	5.7	5.7	2.5	2.5	-29.7	-0.5	-9.0	-0.4	-9.17e-02	-0.2
1361	ok	0.24	1.93e-02	1.28e-02	5.7	5.7	2.5	2.5	-28.1	0.1	-7.4	7.37e-04	6.31e-03	-0.2
1399	ok	0.24	0.1	2.74e-02	5.7	5.7	2.5	2.5	-66.1	-2.4	5.3	3.96e-02	3.05e-03	2.95e-03
1422	ok	0.24	0.1	2.42e-02	5.7	5.7	2.5	2.5	-50.0	-6.9	13.7	2.70e-02	3.11e-03	1.93e-03
1445	ok	0.24	7.99e-02	1.83e-02	5.7	5.7	2.5	2.5	-29.5	-5.5	15.9	2.40e-02	2.85e-03	1.48e-03
1468	ok	0.24	5.71e-02	1.42e-02	5.7	5.7	2.5	2.5	-26.0	-1.3	-9.7	0.9	0.2	-0.2
1491	ok	0.24	3.94e-02	1.26e-02	5.7	5.7	2.5	2.5	-25.1	-0.2	-10.3	0.4	0.1	-0.2
1526	ok	0.24	2.36e-02	1.12e-02	5.7	5.7	2.5	2.5	-23.9	0.9	-6.5	2.89e-02	-1.99e-02	-0.2
1576	ok	0.24	0.1	2.85e-02	5.7	5.7	2.5	2.5	-56.8	-5.3	-7.4	7.97e-02	1.04e-02	6.04e-04
1621	ok	0.24	0.1	2.21e-02	5.7	5.7	2.5	2.5	-44.4	-6.5	10.3	2.70e-02	4.39e-03	-8.80e-05
1666	ok	0.24	8.47e-02	1.82e-02	5.7	5.7	2.5	2.5	-29.1	-4.6	15.7	3.54e-02	7.07e-03	-5.15e-04
1711	ok	0.24	6.17e-02	1.44e-02	5.7	5.7	2.5	2.5	-27.6	-2.9	-10.7	0.9	0.2	-6.28e-02
1756	ok	0.24	4.14e-02	1.25e-02	5.7	5.7	2.5	2.5	-26.4	-2.2	-7.6	0.4	9.53e-02	-5.67e-02
1801	ok	0.24	2.65e-02	9.43e-03	5.7	5.7	2.5	2.5	-22.8	-2.0	-4.2	3.22e-02	-1.91e-04	-7.39e-02
1839	ok	0.24	0.1	2.08e-02	5.7	5.7	2.5	2.5	-41.9	0.4	2.8	3.24e-02	9.99e-03	-3.49e-04
1862	ok	0.24	0.1	1.88e-02	5.7	5.7	2.5	2.5	-33.7	-2.9	8.6	1.89e-02	2.50e-03	6.31e-04
1885	ok	0.24	9.55e-02	1.36e-02	5.7	5.7	2.5	2.5	-22.7	-3.8	9.8	6.03e-03	1.29e-03	1.54e-03
1908	ok	0.24	6.90e-02	1.02e-02	5.7	5.7	2.5	2.5	-18.3	-1.8	-8.3	-0.9	-0.2	-0.2
1931	ok	0.24	4.47e-02	8.88e-03	5.7	5.7	2.5	2.5	-18.8	-1.4	-8.1	-0.4	-8.56e-02	-0.2
1966	ok	0.24	3.29e-02	8.48e-03	5.7	5.7	2.5	2.5	-16.2	0.2	-6.2	1.32e-03	6.19e-03	-0.2
2004	ok	0.24	0.1	2.06e-02	5.7	5.7	2.5	2.5	-41.6	2.52e-03	-1.9	2.16e-02	1.30e-03	-6.00e-03
2027	ok	0.24	0.1	1.73e-02	5.7	5.7	2.5	2.5	-30.0	-1.4	6.9	2.08e-02	7.24e-04	1.10e-03
2050	ok	0.24	9.33e-02	1.26e-02	5.7	5.7	2.5	2.5	-20.9	-2.0	10.3	1.56e-02	7.41e-04	1.74e-03
2073	ok	0.24	6.80e-02	9.93e-03	5.7	5.7	2.5	2.5	-16.8	-2.2	-8.0	2.91e-02	2.39e-02	-0.2
2096	ok	0.24	3.89e-02	8.04e-03	5.7	5.7	2.5	2.5	-17.3	-1.8	-7.0	1.62e-02	2.13e-02	-0.2
2131	ok	0.24	3.65e-02	6.92e-03	5.7	5.7	2.5	2.5	-15.5	0.4	-5.6	-1.64e-03	-2.13e-02	-0.2
2181	ok	0.24	0.2	2.28e-02	5.7	5.7	2.5	2.5	-34.5	-3.6	-8.1	-2.3	-0.4	-0.1
2226	ok	0.24	0.1	1.59e-02	5.7	5.7	2.5	2.5	-14.5	-2.4	-6.8	-1.7	-0.3	-0.1
2271	ok	0.24	8.99e-02	1.17e-02	5.7	5.7	2.5	2.5	-13.5	-1.6	3.7	-1.2	-0.2	-8.69e-02
2316	ok	0.24	6.67e-02	1.01e-02	5.7	5.7	2.5	2.5	-7.0	0.1	8.7	-0.8	-0.2	-7.80e-02
2361	ok	0.24	4.20e-02	8.22e-03	5.7	5.7	2.5	2.5	-16.1	-1.7	-6.9	0.4	8.30e-02	-6.22e-02
2406	ok	0.24	3.19e-02	5.09e-03	5.7	5.7	2.5	2.5	-9.1	0.6	-1.8	-6.66e-03	-4.73e-03	-7.31e-02
2449	ok	0.24	0.2	2.69e-02	5.7	5.7	2.5	2.5	-42.0	-3.9	-10.2	-2.4	-0.5	-0.3

2472	ok	0.24	0.1	1.36e-02	5.7	5.7	2.5	2.5	-14.5	-12.2	-10.2	-1.8	-0.4	-0.3
2495	ok	0.24	0.1	6.33e-03	5.7	5.7	2.5	2.5	-11.7	-1.3	6.6	-1.2	-0.3	-0.2
2518	ok	0.24	8.20e-02	6.10e-03	5.7	5.7	2.5	2.5	-7.6	1.4	8.2	-0.7	-0.2	-0.2
2541	ok	0.24	5.08e-02	4.54e-03	5.7	5.7	2.5	2.5	-2.8	-0.7	6.7	-0.3	-9.07e-02	-0.2
2576	ok	0.24	3.04e-02	3.59e-03	5.7	5.7	2.5	2.5	-8.5	0.3	-2.1	7.18e-03	3.78e-03	-0.2
2767	ok	0.24	0.3	5.82e-02	5.7	5.7	2.5	2.5	-130.9	-26.6	-40.5	4.5	0.7	8.25e-02
2790	ok	0.24	0.3	1.61e-02	5.7	5.7	2.5	2.5	33.5	-1.9	10.2	2.8	0.6	1.56e-02
2813	ok	0.24	0.2	7.85e-03	5.7	5.7	2.5	2.5	-11.4	-7.0	9.6	1.9	0.4	-8.87e-03
2836	ok	0.24	7.77e-02	6.16e-03	5.7	5.7	2.5	2.5	-9.6	1.1	5.9	2.50e-02	4.10e-03	-3.25e-03
2859	ok	0.24	3.64e-02	4.34e-03	5.7	5.7	2.5	2.5	-3.9	1.6	-2.3	-0.4	-5.89e-02	9.80e-02
2894	ok	0.24	3.08e-02	2.94e-03	5.7	5.7	2.5	2.5	-2.6	-2.1	4.0	-0.2	-5.31e-02	-0.2
3081	ok	0.24	0.3	6.88e-02	5.7	5.7	2.5	2.5	-149.8	-35.5	-53.3	4.3	0.8	0.4
3128	ok	0.24	0.4	1.66e-02	5.7	5.7	2.5	2.5	32.2	17.7	4.7	2.9	0.7	0.2
3175	ok	0.24	0.2	5.82e-03	5.7	5.7	2.5	2.5	-5.2	6.2	12.2	2.0	0.5	0.1
3222	ok	0.24	9.72e-02	6.43e-03	5.7	5.7	2.5	2.5	-9.0	2.0	7.4	4.01e-02	7.85e-03	5.22e-03
3269	ok	0.24	4.34e-02	4.74e-03	5.7	5.7	2.5	2.5	-5.6	1.1	-3.6	-0.4	-0.1	-6.07e-02
3316	ok	0.24	1.77e-02	1.33e-03	5.7	5.7	2.5	2.5	-0.3	0.6	3.3	-6.42e-03	3.54e-02	1.57e-03

Nodo	**x/d**	**V N/M**	**ver. rid**	**Af pr-**	**Af pr+**	**Af sec-**	**Af sec+**	**N z**	**N o**	**N zo**	**M z**	**M o**	**M zo**
								-370.15	-64.23	-53.30	-2.68	-0.60	-0.29
	0.24	0.53	0.16	5.65	5.65	2.51	2.51	33.51	17.70	93.47	4.50	0.77	0.35

Nodo	**Stato**	**Max tau** kN/ m2	**Ver V pr**	**Ver V sec**	**Af V pr**	**Af V sec**	**V pr** kN/ m	**V sec** kN/ m
308	ok	1.52						
355	ok	1.22						
402	ok	0.79						
449	ok	0.54						
496	ok	0.36						
543	ok	0.59						
629	ok	1.66						
652	ok	1.19						
675	ok	0.91						
698	ok	0.56						
721	ok	0.44						
756	ok	0.62						
794	ok	1.66						
817	ok	1.10						
840	ok	0.91						
863	ok	0.54						
886	ok	0.35						
921	ok	0.38						
971	ok	1.49						
1016	ok	1.11						
1061	ok	0.78						
1106	ok	0.54						
1151	ok	0.30						
1196	ok	0.35						
1234	ok	1.60						
1257	ok	1.12						
1280	ok	0.89						
1303	ok	0.56						
1326	ok	0.34						
1361	ok	0.30						
1399	ok	1.60						
1422	ok	1.11						
1445	ok	0.89						
1468	ok	0.54						
1491	ok	0.35						
1526	ok	0.34						
1576	ok	1.46						
1621	ok	1.10						
1666	ok	0.78						
1711	ok	0.54						
1756	ok	0.30						
1801	ok	0.30						
1839	ok	1.58						
1862	ok	1.12						
1885	ok	0.88						
1908	ok	0.56						
1931	ok	0.33						
1966	ok	0.31						
2004	ok	1.58						
2027	ok	1.10						
2050	ok	0.88						
2073	ok	0.54						
2096	ok	0.34						

2131	ok	0.30
2181	ok	1.74
2226	ok	1.10
2271	ok	0.77
2316	ok	0.52
2361	ok	0.30
2406	ok	0.32
2449	ok	1.91
2472	ok	1.09
2495	ok	0.79
2518	ok	0.44
2541	ok	0.27
2576	ok	0.33
2767	ok	2.06
2790	ok	1.11
2813	ok	0.85
2836	ok	0.43
2859	ok	0.26
2894	ok	0.44
3081	ok	2.08
3128	ok	1.20
3175	ok	0.74
3222	ok	0.43
3269	ok	0.26
3316	ok	0.44

Nodo	Max tau	Ver V pr	Ver V sec	Af V pr	Af V sec	V pr	V sec
	2.08						

Macro Setto	Spessore	Id Materiale	Id Criterio	Progettazione
	cm			
17	15.00	1	1	Singolo elemento NON DISSIPATIVO

Nodo	Stato	x/d	V N/M	ver. rid	Af pr-	Af pr+	Af sec-	Af sec+	N z	N o	N zo	M z	M o	M zo
									kN/ m	kN/ m	kN/ m	kN	kN	kN
310	ok	0.24	0.3	0.2	5.7	5.7	2.5	2.5	-401.2	-69.4	101.4	-0.3	-2.77e-02	3.49e-02
357	ok	0.24	0.4	2.90e-02	5.7	5.7	2.5	2.5	58.7	9.5	47.5	-0.2	-4.34e-02	2.22e-02
404	ok	0.24	0.2	2.36e-02	5.7	5.7	2.5	2.5	-47.7	-12.0	-18.4	-0.2	-3.45e-02	3.85e-03
451	ok	0.24	0.1	1.93e-02	5.7	5.7	2.5	2.5	-41.6	-7.0	5.8	-1.3	-0.3	5.34e-02
498	ok	0.24	8.16e-02	1.96e-02	5.7	5.7	2.5	2.5	-33.1	-6.9	-9.6	-0.6	-0.1	4.94e-02
545	ok	0.24	4.46e-02	2.64e-02	5.7	5.7	2.5	2.5	-43.8	-12.7	-19.2	-6.58e-02	4.87e-03	2.61e-02
630	ok	0.24	0.5	0.1	5.7	5.7	2.5	2.5	-326.7	-38.6	56.1	-0.1	-6.65e-03	-1.17e-02
653	ok	0.24	0.3	4.84e-02	5.7	5.7	2.5	2.5	-50.4	-44.8	36.2	-7.03e-02	-1.09e-02	-6.76e-03
676	ok	0.24	0.1	2.17e-02	5.7	5.7	2.5	2.5	-49.8	-4.3	-4.1	-0.3	-4.07e-02	-0.2
699	ok	0.24	7.58e-02	1.79e-02	5.7	5.7	2.5	2.5	-42.8	-7.1	-4.8	-1.3	-0.3	-0.1
722	ok	0.24	3.67e-02	1.82e-02	5.7	5.7	2.5	2.5	-31.7	-4.4	-0.4	-0.6	-0.1	-0.1
758	ok	0.24	4.20e-02	2.15e-02	5.7	5.7	2.5	2.5	-42.0	-11.2	-12.6	-2.72e-02	7.95e-02	-0.2
795	ok	0.24	0.2	7.91e-02	5.7	5.7	2.5	2.5	-192.6	-20.7	31.9	2.33e-02	-6.11e-06	-1.81e-02
818	ok	0.24	0.1	3.82e-02	5.7	5.7	2.5	2.5	-68.7	-30.6	33.6	4.61e-02	1.22e-02	-1.40e-02
841	ok	0.24	0.1	2.33e-02	5.7	5.7	2.5	2.5	-54.7	-1.2	-1.8	-0.2	-6.37e-02	-0.3
864	ok	0.24	7.43e-02	1.72e-02	5.7	5.7	2.5	2.5	-38.9	-4.6	-6.7	0.9	0.2	-0.2
887	ok	0.24	4.70e-02	1.82e-02	5.7	5.7	2.5	2.5	-34.9	-1.3	-9.3	0.4	0.1	-0.2
923	ok	0.24	3.57e-02	1.62e-02	5.7	5.7	2.5	2.5	-36.5	1.2	-9.0	3.63e-02	7.71e-03	-0.2
973	ok	0.24	0.2	5.09e-02	5.7	5.7	2.5	2.5	-125.9	-16.6	14.5	0.2	2.21e-02	-6.17e-04
1018	ok	0.24	0.1	3.35e-02	5.7	5.7	2.5	2.5	-68.2	-16.6	28.7	0.1	2.52e-02	-2.92e-03
1063	ok	0.24	9.82e-02	2.28e-02	5.7	5.7	2.5	2.5	-19.4	-10.7	29.3	0.1	2.04e-02	-9.72e-04
1108	ok	0.24	5.29e-02	1.79e-02	5.7	5.7	2.5	2.5	-42.3	-4.3	-6.6	1.0	0.2	-7.57e-02
1153	ok	0.24	3.07e-02	1.78e-02	5.7	5.7	2.5	2.5	-36.8	-1.7	-5.9	0.5	9.72e-02	-7.14e-02
1198	ok	0.24	2.05e-02	1.37e-02	5.7	5.7	2.5	2.5	-33.3	-1.0	-6.3	-4.07e-02	-5.47e-03	-7.50e-02
1235	ok	0.24	0.1	3.47e-02	5.7	5.7	2.5	2.5	-86.5	-2.4	7.6	-8.73e-03	7.68e-03	-2.22e-03
1258	ok	0.24	0.1	2.88e-02	5.7	5.7	2.5	2.5	-59.1	-10.2	18.1	-1.57e-02	-5.61e-03	-1.91e-03
1281	ok	0.24	8.93e-02	1.94e-02	5.7	5.7	2.5	2.5	-30.1	-8.5	16.7	-8.29e-03	-6.03e-03	-1.70e-03
1304	ok	0.24	5.40e-02	1.42e-02	5.7	5.7	2.5	2.5	-32.3	-2.2	-7.6	-0.9	-0.2	-0.2
1327	ok	0.24	2.93e-02	1.32e-02	5.7	5.7	2.5	2.5	-29.7	-0.6	-8.9	-0.4	-9.19e-02	-0.2
1363	ok	0.24	1.91e-02	1.28e-02	5.7	5.7	2.5	2.5	-27.9	5.60e-02	-7.4	-4.67e-04	6.70e-03	-0.2
1400	ok	0.24	0.1	3.00e-02	5.7	5.7	2.5	2.5	-71.9	-2.5	5.4	5.03e-02	2.75e-03	-1.28e-03
1423	ok	0.24	0.1	2.64e-02	5.7	5.7	2.5	2.5	-54.8	-7.4	14.2	3.70e-02	5.18e-03	-7.58e-04
1446	ok	0.24	8.00e-02	1.95e-02	5.7	5.7	2.5	2.5	-31.6	-6.0	16.4	3.22e-02	4.55e-03	-1.78e-03
1469	ok	0.24	5.65e-02	1.46e-02	5.7	5.7	2.5	2.5	-26.4	-1.6	-9.5	0.9	0.2	-0.2
1492	ok	0.24	3.88e-02	1.26e-02	5.7	5.7	2.5	2.5	-25.2	-0.3	-10.2	0.4	0.1	-0.2
1528	ok	0.24	2.27e-02	1.11e-02	5.7	5.7	2.5	2.5	-23.7	0.8	-6.5	2.69e-02	-2.12e-02	-0.2
1578	ok	0.24	0.1	3.10e-02	5.7	5.7	2.5	2.5	-61.8	-5.5	-7.5	0.1	1.88e-02	3.07e-03
1623	ok	0.24	0.1	2.42e-02	5.7	5.7	2.5	2.5	-49.1	-7.1	10.6	0.1	1.95e-02	-8.10e-04

1668	ok	0.24	7.96e-02	1.94e-02	5.7	5.7	2.5	2.5	-31.6	-5.2	16.0	9.13e-02	1.85e-02	-1.22e-03
1713	ok	0.24	5.84e-02	1.49e-02	5.7	5.7	2.5	2.5	-28.0	-3.2	-10.4	1.0	0.2	-6.25e-02
1758	ok	0.24	3.81e-02	1.25e-02	5.7	5.7	2.5	2.5	-26.5	-2.4	-7.4	0.5	9.74e-02	-5.80e-02
1803	ok	0.24	2.67e-02	9.40e-03	5.7	5.7	2.5	2.5	-22.8	-2.1	-4.0	4.40e-02	1.45e-03	-7.32e-02
1840	ok	0.24	0.1	2.36e-02	5.7	5.7	2.5	2.5	-47.9	0.4	2.5	-3.46e-02	2.26e-03	-5.01e-03
1863	ok	0.24	0.1	2.11e-02	5.7	5.7	2.5	2.5	-38.6	-3.5	7.5	-3.39e-02	-8.75e-03	-4.90e-03
1886	ok	0.24	8.81e-02	1.47e-02	5.7	5.7	2.5	2.5	-25.2	-4.8	8.8	-3.27e-02	-6.01e-03	-3.61e-03
1909	ok	0.24	6.57e-02	1.06e-02	5.7	5.7	2.5	2.5	-18.6	-2.1	-8.3	-0.9	-0.2	-0.2
1932	ok	0.24	4.22e-02	8.84e-03	5.7	5.7	2.5	2.5	-18.8	-1.8	-7.9	-0.4	-8.54e-02	-0.2
1968	ok	0.24	3.18e-02	8.37e-03	5.7	5.7	2.5	2.5	-16.1	7.79e-02	-6.1	-4.29e-04	4.62e-03	-0.2
2005	ok	0.24	0.1	2.39e-02	5.7	5.7	2.5	2.5	-48.5	7.72e-02	-2.0	3.57e-02	2.29e-03	-9.30e-03
2028	ok	0.24	0.1	1.99e-02	5.7	5.7	2.5	2.5	-38.8	-3.8	-3.8	2.99e-02	3.20e-03	-7.79e-03
2051	ok	0.24	9.35e-02	1.34e-02	5.7	5.7	2.5	2.5	-21.7	-4.4	7.4	1.4	0.3	-0.2
2074	ok	0.24	6.73e-02	1.01e-02	5.7	5.7	2.5	2.5	-15.3	-2.5	9.6	0.9	0.2	-0.2
2097	ok	0.24	3.71e-02	8.01e-03	5.7	5.7	2.5	2.5	-14.6	6.47e-03	-6.1	0.4	6.51e-02	-0.2
2133	ok	0.24	3.62e-02	6.82e-03	5.7	5.7	2.5	2.5	-12.2	0.8	-4.8	1.81e-02	-2.50e-02	-0.2
2183	ok	0.24	0.1	2.70e-02	5.7	5.7	2.5	2.5	-36.8	-2.9	-6.9	-2.3	-0.4	-0.1
2228	ok	0.24	0.1	1.87e-02	5.7	5.7	2.5	2.5	-17.9	-3.3	-8.3	-1.8	-0.3	-0.1
2273	ok	0.24	8.87e-02	1.20e-02	5.7	5.7	2.5	2.5	-20.5	-3.7	6.1	1.5	0.3	-6.24e-02
2318	ok	0.24	6.53e-02	1.02e-02	5.7	5.7	2.5	2.5	-15.4	-2.0	12.1	1.0	0.2	-7.14e-02
2363	ok	0.24	4.09e-02	8.31e-03	5.7	5.7	2.5	2.5	-16.1	-2.0	-6.6	0.5	8.68e-02	-6.27e-02
2408	ok	0.24	3.27e-02	5.05e-03	5.7	5.7	2.5	2.5	-11.8	-0.9	-3.1	3.73e-02	-1.75e-03	-7.42e-02
2450	ok	0.24	0.1	3.11e-02	5.7	5.7	2.5	2.5	-64.8	-5.2	-11.4	1.6	0.3	-0.3
2473	ok	0.24	0.1	2.17e-02	5.7	5.7	2.5	2.5	-8.2	-10.3	-21.8	0.9	0.2	-0.2
2496	ok	0.24	0.1	6.66e-03	5.7	5.7	2.5	2.5	-7.6	-7.5	4.5	-9.19e-03	4.35e-03	-9.14e-03
2519	ok	0.24	8.29e-02	6.29e-03	5.7	5.7	2.5	2.5	-9.4	-1.8	5.6	-8.04e-03	-2.87e-03	-1.26e-02
2542	ok	0.24	5.24e-02	4.72e-03	5.7	5.7	2.5	2.5	-8.4	-0.3	-2.6	-0.3	-5.44e-02	-0.2
2578	ok	0.24	3.18e-02	3.52e-03	5.7	5.7	2.5	2.5	-8.5	0.3	-1.8	8.87e-03	2.88e-03	-0.2
2768	ok	0.24	0.3	7.53e-02	5.7	5.7	2.5	2.5	-144.6	-24.9	-47.7	4.6	0.7	9.68e-02
2791	ok	0.24	0.3	1.90e-02	5.7	5.7	2.5	2.5	31.2	-2.8	10.7	2.8	0.6	2.16e-02
2814	ok	0.24	0.2	7.02e-03	5.7	5.7	2.5	2.5	-10.2	-5.6	8.8	1.9	0.4	-7.43e-03
2837	ok	0.24	7.86e-02	6.45e-03	5.7	5.7	2.5	2.5	-9.4	1.4	6.9	3.89e-02	6.62e-03	-5.04e-03
2860	ok	0.24	3.55e-02	4.53e-03	5.7	5.7	2.5	2.5	-3.8	1.7	-1.9	-0.4	-5.57e-02	9.59e-02
2896	ok	0.24	3.20e-02	3.13e-03	5.7	5.7	2.5	2.5	-2.7	-2.2	4.4	-0.2	-5.78e-02	-0.2
3083	ok	0.24	0.2	0.1	5.7	5.7	2.5	2.5	-179.6	-42.0	-81.3	-0.3	-3.11e-02	-9.23e-02
3130	ok	0.24	0.5	1.35e-02	5.7	5.7	2.5	2.5	24.8	17.8	2.5	2.9	0.7	0.2
3177	ok	0.24	0.2	5.43e-03	5.7	5.7	2.5	2.5	-1.8	6.9	13.1	2.0	0.5	0.2
3224	ok	0.24	0.1	6.56e-03	5.7	5.7	2.5	2.5	-9.6	2.4	1.4	6.68e-02	1.58e-02	7.71e-03
3271	ok	0.24	4.59e-02	4.87e-03	5.7	5.7	2.5	2.5	-5.5	1.4	-3.3	-0.4	-0.1	-5.99e-02
3318	ok	0.24	1.91e-02	1.50e-03	5.7	5.7	2.5	2.5	-0.5	0.5	3.5	-2.81e-04	3.47e-02	2.95e-03

Nodo	**x/d**	**V N/M**	**ver. rid**	**Af pr-**	**Af pr+**	**Af sec-**	**Af sec+**	**N z**	**N o**	**N zo**	**M z**	**M o**	**M zo**
								-401.18	-69.43	-81.30	-2.35	-0.45	-0.35
	0.24	0.53	0.17	5.65	5.65	2.51	2.51	58.72	17.80	101.41	4.60	0.74	0.21

Nodo	**Stato**	**Max tau**	**Ver V pr**	**Ver V sec**	**Af V pr**	**Af V sec**	**V pr**	**V sec**
		kN/ m2					kN/ m	kN/ m
310	ok	1.53						
357	ok	1.22						
404	ok	0.80						
451	ok	0.54						
498	ok	0.36						
545	ok	0.60						
630	ok	1.67						
653	ok	1.20						
676	ok	0.92						
699	ok	0.57						
722	ok	0.45						
758	ok	0.62						
795	ok	1.67						
818	ok	1.10						
841	ok	0.91						
864	ok	0.54						
887	ok	0.35						
923	ok	0.38						
973	ok	1.49						
1018	ok	1.11						
1063	ok	0.79						
1108	ok	0.54						
1153	ok	0.30						
1198	ok	0.35						
1235	ok	1.60						
1258	ok	1.12						
1281	ok	0.89						
1304	ok	0.56						
1327	ok	0.34						
1363	ok	0.30						

1400	ok	1.60
1423	ok	1.11
1446	ok	0.89
1469	ok	0.54
1492	ok	0.35
1528	ok	0.33
1578	ok	1.46
1623	ok	1.11
1668	ok	0.79
1713	ok	0.54
1758	ok	0.30
1803	ok	0.31
1840	ok	1.58
1863	ok	1.12
1886	ok	0.89
1909	ok	0.56
1932	ok	0.33
1968	ok	0.31
2005	ok	1.58
2028	ok	1.10
2051	ok	0.89
2074	ok	0.54
2097	ok	0.35
2133	ok	0.30
2183	ok	1.72
2228	ok	1.10
2273	ok	0.78
2318	ok	0.52
2363	ok	0.30
2408	ok	0.32
2450	ok	1.91
2473	ok	1.10
2496	ok	0.79
2519	ok	0.44
2542	ok	0.27
2578	ok	0.34
2768	ok	2.05
2791	ok	1.11
2814	ok	0.85
2837	ok	0.44
2860	ok	0.26
2896	ok	0.44
3083	ok	2.06
3130	ok	1.19
3177	ok	0.74
3224	ok	0.44
3271	ok	0.26
3318	ok	0.44

Nodo	Max tau	Ver V pr	Ver V sec	Af V pr	Af V sec	V pr	V sec
	2.06						

Macro Setto	Spessore	Id Materiale	Id Criterio	Progettazione
	cm			
18	15.00	1	1	Singolo elemento NON DISSIPATIVO

Nodo	Stato	x/d	V N/M	ver. rid	Af pr-	Af pr+	Af sec-	Af sec+	N z	N o	N zo	M z	M o	M zo
									kN/ m	kN/ m	kN/ m	kN	kN	kN
312	ok	0.24	0.2	0.2	5.7	5.7	2.5	2.5	-415.7	-71.9	105.1	-0.2	-1.61e-02	7.94e-03
359	ok	0.24	0.4	2.90e-02	5.7	5.7	2.5	2.5	61.3	9.6	48.8	-0.2	-4.53e-02	2.68e-03
406	ok	0.24	0.2	2.35e-02	5.7	5.7	2.5	2.5	-47.1	-11.7	-18.5	-0.2	-4.20e-02	2.56e-03
453	ok	0.24	0.1	1.92e-02	5.7	5.7	2.5	2.5	-41.6	-6.8	5.8	-1.3	-0.3	5.28e-02
500	ok	0.24	8.35e-02	1.96e-02	5.7	5.7	2.5	2.5	-33.1	-6.7	-9.6	-0.7	-0.1	4.97e-02
547	ok	0.24	4.52e-02	2.65e-02	5.7	5.7	2.5	2.5	-44.1	-12.7	-19.3	-8.33e-02	2.33e-02	2.79e-02
631	ok	0.24	0.5	0.1	5.7	5.7	2.5	2.5	-336.9	-39.3	57.6	-9.16e-02	-2.37e-03	-7.11e-03
654	ok	0.24	0.3	5.07e-02	5.7	5.7	2.5	2.5	-52.2	-46.3	37.6	-6.32e-02	-1.44e-02	-5.06e-03
677	ok	0.24	0.1	2.18e-02	5.7	5.7	2.5	2.5	-50.0	-4.5	-3.9	-0.3	-4.47e-02	-0.2
700	ok	0.24	7.64e-02	1.79e-02	5.7	5.7	2.5	2.5	-42.9	-7.2	-4.8	-1.3	-0.3	-0.1
723	ok	0.24	3.66e-02	1.82e-02	5.7	5.7	2.5	2.5	-31.7	-4.4	-0.4	-0.6	-0.1	-0.1
760	ok	0.24	4.22e-02	2.16e-02	5.7	5.7	2.5	2.5	-42.2	-11.3	-12.8	-1.67e-02	8.70e-02	-0.2
796	ok	0.24	0.2	8.16e-02	5.7	5.7	2.5	2.5	-198.7	-21.1	32.7	3.36e-02	1.38e-03	-9.92e-03
819	ok	0.24	0.1	3.98e-02	5.7	5.7	2.5	2.5	-71.2	-31.5	35.0	4.80e-02	1.14e-02	-7.76e-03
842	ok	0.24	0.1	2.35e-02	5.7	5.7	2.5	2.5	-55.2	-1.5	-1.5	-0.2	-6.33e-02	-0.3

865	ok	0.24	7.39e-02	1.73e-02	5.7	5.7	2.5	2.5	-39.0	-4.8	-6.6	0.9	0.2	-0.2
888	ok	0.24	4.80e-02	1.83e-02	5.7	5.7	2.5	2.5	-35.0	-1.4	-9.3	0.4	9.94e-02	-0.2
925	ok	0.24	3.74e-02	1.62e-02	5.7	5.7	2.5	2.5	-36.5	1.2	-9.1	2.83e-02	3.91e-03	-0.2
975	ok	0.24	0.2	5.25e-02	5.7	5.7	2.5	2.5	-129.8	-17.0	15.0	0.2	2.18e-02	3.56e-03
1020	ok	0.24	0.1	3.49e-02	5.7	5.7	2.5	2.5	-70.7	-17.1	29.8	0.1	2.83e-02	-1.63e-03
1065	ok	0.24	9.89e-02	2.33e-02	5.7	5.7	2.5	2.5	-29.3	-13.5	10.4	-1.5	-0.3	-5.36e-02
1110	ok	0.24	5.32e-02	1.80e-02	5.7	5.7	2.5	2.5	-42.6	-4.4	-6.4	1.0	0.2	-7.63e-02
1155	ok	0.24	3.08e-02	1.78e-02	5.7	5.7	2.5	2.5	-36.9	-1.8	-5.9	0.5	9.83e-02	-7.21e-02
1200	ok	0.24	2.11e-02	1.38e-02	5.7	5.7	2.5	2.5	-33.3	-1.1	-6.3	-5.00e-02	-1.05e-02	-7.39e-02
1236	ok	0.24	0.1	3.60e-02	5.7	5.7	2.5	2.5	-89.7	-2.4	7.8	-1.74e-02	8.60e-03	-5.78e-03
1259	ok	0.24	0.1	2.98e-02	5.7	5.7	2.5	2.5	-61.4	-10.6	18.5	-2.36e-02	-4.84e-03	-3.82e-03
1282	ok	0.24	8.76e-02	1.99e-02	5.7	5.7	2.5	2.5	-26.4	-11.7	12.1	-1.4	-0.3	-0.2
1305	ok	0.24	5.37e-02	1.44e-02	5.7	5.7	2.5	2.5	-32.5	-2.3	-7.5	-0.9	-0.2	-0.2
1328	ok	0.24	2.89e-02	1.32e-02	5.7	5.7	2.5	2.5	-29.8	-0.6	-8.9	-0.4	-9.21e-02	-0.2
1365	ok	0.24	1.88e-02	1.28e-02	5.7	5.7	2.5	2.5	-27.9	4.82e-02	-7.4	-2.86e-03	2.92e-03	-0.2
1401	ok	0.24	0.1	3.11e-02	5.7	5.7	2.5	2.5	-74.8	-2.6	5.5	6.48e-02	4.47e-03	-3.03e-03
1424	ok	0.24	0.1	2.74e-02	5.7	5.7	2.5	2.5	-57.1	-7.6	14.5	4.91e-02	1.00e-02	-2.67e-03
1447	ok	0.24	7.96e-02	2.01e-02	5.7	5.7	2.5	2.5	-32.7	-6.3	16.7	4.25e-02	8.16e-03	-3.73e-03
1470	ok	0.24	5.57e-02	1.48e-02	5.7	5.7	2.5	2.5	-26.7	-1.7	-9.4	0.9	0.2	-0.2
1493	ok	0.24	3.86e-02	1.26e-02	5.7	5.7	2.5	2.5	-25.3	-0.3	-10.1	0.4	0.1	-0.2
1530	ok	0.24	2.19e-02	1.11e-02	5.7	5.7	2.5	2.5	-23.7	0.8	-6.4	1.77e-02	-2.92e-02	-0.2
1580	ok	0.24	0.1	3.21e-02	5.7	5.7	2.5	2.5	-64.0	-5.6	-7.5	0.2	2.77e-02	6.10e-03
1625	ok	0.24	0.1	2.51e-02	5.7	5.7	2.5	2.5	-51.4	-7.4	10.7	0.1	2.22e-02	3.82e-04
1670	ok	0.24	8.00e-02	1.99e-02	5.7	5.7	2.5	2.5	-32.8	-5.5	16.2	9.65e-02	2.08e-02	-5.50e-04
1715	ok	0.24	5.76e-02	1.51e-02	5.7	5.7	2.5	2.5	-28.4	-3.3	-10.2	1.0	0.2	-6.38e-02
1760	ok	0.24	3.74e-02	1.25e-02	5.7	5.7	2.5	2.5	-26.7	-2.5	-7.3	0.5	9.93e-02	-5.94e-02
1805	ok	0.24	2.67e-02	9.40e-03	5.7	5.7	2.5	2.5	-22.8	-2.1	-3.9	5.75e-02	-2.07e-03	-7.21e-02
1841	ok	0.24	0.1	2.48e-02	5.7	5.7	2.5	2.5	-50.7	0.4	2.4	-5.19e-02	3.19e-03	-8.15e-03
1864	ok	0.24	0.1	2.20e-02	5.7	5.7	2.5	2.5	-40.9	-3.7	7.1	-4.96e-02	-9.33e-03	-6.49e-03
1887	ok	0.24	8.43e-02	1.52e-02	5.7	5.7	2.5	2.5	-26.3	-5.3	8.4	-4.60e-02	-7.38e-03	-6.06e-03
1910	ok	0.24	6.37e-02	1.07e-02	5.7	5.7	2.5	2.5	-18.9	-2.2	-8.2	-0.9	-0.2	-0.2
1933	ok	0.24	4.05e-02	8.82e-03	5.7	5.7	2.5	2.5	-18.9	-1.8	-7.8	-0.4	-8.70e-02	-0.2
1970	ok	0.24	3.10e-02	8.35e-03	5.7	5.7	2.5	2.5	-16.1	4.91e-02	-6.0	-3.03e-03	-9.12e-04	-0.2
2006	ok	0.24	0.1	2.54e-02	5.7	5.7	2.5	2.5	-51.5	0.1	-2.0	5.77e-02	3.90e-03	-1.19e-02
2029	ok	0.24	0.1	2.10e-02	5.7	5.7	2.5	2.5	-40.9	-4.1	-4.5	5.09e-02	1.07e-02	-1.05e-02
2052	ok	0.24	9.34e-02	1.38e-02	5.7	5.7	2.5	2.5	-24.2	-5.2	7.6	4.30e-02	6.92e-03	-7.42e-03
2075	ok	0.24	6.73e-02	1.02e-02	5.7	5.7	2.5	2.5	-17.4	-2.7	-7.8	4.33e-02	2.63e-02	-0.2
2098	ok	0.24	3.72e-02	8.03e-03	5.7	5.7	2.5	2.5	-14.8	-9.86e-02	-6.0	0.4	7.07e-02	-0.2
2135	ok	0.24	3.60e-02	6.79e-03	5.7	5.7	2.5	2.5	-15.4	0.4	-5.2	-2.87e-03	-3.23e-02	-0.2
2185	ok	0.24	0.1	2.89e-02	5.7	5.7	2.5	2.5	-57.5	-4.7	-7.5	0.2	2.90e-02	5.67e-03
2230	ok	0.24	0.1	1.99e-02	5.7	5.7	2.5	2.5	-38.0	-7.2	-8.2	0.2	3.08e-02	-3.39e-03
2275	ok	0.24	8.74e-02	1.23e-02	5.7	5.7	2.5	2.5	-23.7	-7.1	3.3	0.1	2.56e-02	-4.10e-03
2320	ok	0.24	6.60e-02	1.03e-02	5.7	5.7	2.5	2.5	-7.3	-2.4	4.7	-0.8	-0.2	-7.17e-02
2365	ok	0.24	4.13e-02	8.37e-03	5.7	5.7	2.5	2.5	-16.2	-1.7	-6.4	0.5	9.50e-02	-6.20e-02
2410	ok	0.24	3.28e-02	5.04e-03	5.7	5.7	2.5	2.5	-11.9	-1.0	-2.9	4.87e-02	-7.33e-03	-7.35e-02
2451	ok	0.24	0.1	3.51e-02	5.7	5.7	2.5	2.5	-69.9	0.9	-9.0	-1.49e-02	7.84e-03	-2.05e-02
2474	ok	0.24	0.1	2.53e-02	5.7	5.7	2.5	2.5	-24.3	-13.3	-16.4	-1.53e-02	-7.12e-03	-1.56e-02
2497	ok	0.24	0.1	7.10e-03	5.7	5.7	2.5	2.5	-6.8	-8.8	4.5	-1.65e-02	-3.33e-03	-1.67e-02
2520	ok	0.24	8.45e-02	6.40e-03	5.7	5.7	2.5	2.5	-9.3	-2.2	5.9	-1.38e-02	-2.63e-03	-1.55e-02
2543	ok	0.24	5.42e-02	4.84e-03	5.7	5.7	2.5	2.5	-2.9	-0.9	7.4	-0.3	-8.85e-02	-0.2
2580	ok	0.24	3.35e-02	3.58e-03	5.7	5.7	2.5	2.5	-8.5	0.3	-1.6	6.87e-03	-1.12e-03	-0.2
2769	ok	0.24	0.2	8.76e-02	5.7	5.7	2.5	2.5	-155.5	-16.1	-56.2	0.2	8.48e-03	-2.44e-04
2792	ok	0.24	0.3	2.26e-02	5.7	5.7	2.5	2.5	53.9	-40.3	-1.7	0.1	3.46e-02	-8.32e-04
2815	ok	0.24	0.2	7.03e-03	5.7	5.7	2.5	2.5	-6.2	-0.8	7.6	8.28e-02	1.63e-02	-5.65e-03
2838	ok	0.24	7.89e-02	6.63e-03	5.7	5.7	2.5	2.5	-9.4	1.6	7.4	5.01e-02	1.02e-02	-7.64e-03
2861	ok	0.24	3.65e-02	4.66e-03	5.7	5.7	2.5	2.5	-4.1	-0.1	3.1	0.4	7.19e-02	-0.1
2898	ok	0.24	3.32e-02	3.24e-03	5.7	5.7	2.5	2.5	-2.8	-2.2	4.8	-0.1	-6.20e-02	-0.2
3085	ok	0.24	0.2	0.1	5.7	5.7	2.5	2.5	-209.8	-49.9	-95.6	0.3	2.81e-02	2.72e-02
3132	ok	0.24	0.5	1.15e-02	5.7	5.7	2.5	2.5	126.9	42.8	47.7	0.2	5.34e-02	1.26e-02
3179	ok	0.24	0.2	5.35e-03	5.7	5.7	2.5	2.5	-7.9	7.4	3.4	0.1	3.01e-02	1.29e-02
3226	ok	0.24	0.1	6.67e-03	5.7	5.7	2.5	2.5	-9.7	2.8	1.7	9.39e-02	2.20e-02	9.78e-03
3273	ok	0.24	4.81e-02	4.97e-03	5.7	5.7	2.5	2.5	-5.4	1.6	-3.4	-0.4	-0.1	-5.87e-02
3320	ok	0.24	1.89e-02	2.00e-03	5.7	5.7	2.5	2.5	-2.1	0.3	3.8	-0.1	3.58e-02	3.51e-03

Nodo	**x/d**	**V N/M**	**ver. rid**	**Af pr-**	**Af pr+**	**Af sec-**	**Af sec+**	**N z**	**N o**	**N zo**	**M z**	**M o**	**M zo**
								-415.66	-71.91	-95.58	-1.50	-0.30	-0.28
	0.24	0.53	0.18	5.65	5.65	2.51	2.51	126.85	42.79	105.10	0.99	0.20	0.05

Nodo	**Stato**	**Max tau** kN/ m2	**Ver V pr**	**Ver V sec**	**Af V pr**	**Af V sec**	**V pr** kN/ m	**V sec** kN/ m
312	ok	1.49						
359	ok	1.23						
406	ok	0.80						
453	ok	0.54						
500	ok	0.37						
547	ok	0.61						
631	ok	1.65						

654	ok	1.19
677	ok	0.92
700	ok	0.57
723	ok	0.45
760	ok	0.61
796	ok	1.66
819	ok	1.10
842	ok	0.91
865	ok	0.54
888	ok	0.35
925	ok	0.38
975	ok	1.48
1020	ok	1.11
1065	ok	0.79
1110	ok	0.54
1155	ok	0.30
1200	ok	0.36
1236	ok	1.59
1259	ok	1.12
1282	ok	0.89
1305	ok	0.56
1328	ok	0.34
1365	ok	0.29
1401	ok	1.60
1424	ok	1.11
1447	ok	0.89
1470	ok	0.54
1493	ok	0.35
1530	ok	0.33
1580	ok	1.46
1625	ok	1.11
1670	ok	0.79
1715	ok	0.54
1760	ok	0.30
1805	ok	0.32
1841	ok	1.58
1864	ok	1.12
1887	ok	0.89
1910	ok	0.56
1933	ok	0.33
1970	ok	0.31
2006	ok	1.58
2029	ok	1.10
2052	ok	0.89
2075	ok	0.54
2098	ok	0.35
2135	ok	0.30
2185	ok	1.75
2230	ok	1.11
2275	ok	0.78
2320	ok	0.52
2365	ok	0.30
2410	ok	0.32
2451	ok	1.94
2474	ok	1.11
2497	ok	0.79
2520	ok	0.45
2543	ok	0.27
2580	ok	0.34
2769	ok	2.04
2792	ok	1.10
2815	ok	0.85
2838	ok	0.44
2861	ok	0.26
2898	ok	0.44
3085	ok	2.04
3132	ok	1.16
3179	ok	0.75
3226	ok	0.44
3273	ok	0.26
3320	ok	0.44

Nodo	Max tau	Ver V pr	Ver V sec	Af V pr	Af V sec	V pr	V sec
	2.04						

Macro Setto	Spessore	Id Materiale	Id Criterio	Progettazione
	cm			

Macro Setto	Spessore	Id Materiale	Id Criterio	Progettazione
19	15.00	1	1	Singolo elemento NON DISSIPATIVO

Nodo	Stato	x/d	V N/M	ver. rid	Af pr-	Af pr+	Af sec-	Af sec+	N z	N o	N zo	M z	M o	M zo
									kN/ m	kN/ m	kN/ m	kN	kN	kN
314	ok	0.24	0.2	0.2	5.7	5.7	2.5	2.5	-404.9	-70.2	102.0	-7.63e-02	-4.14e-03	-2.01e-02
361	ok	0.24	0.4	2.97e-02	5.7	5.7	2.5	2.5	-68.7	-15.5	3.3	-2.7	-0.6	4.50e-02
408	ok	0.24	0.2	2.37e-02	5.7	5.7	2.5	2.5	-49.4	-12.2	-20.8	-2.0	-0.5	3.43e-02
455	ok	0.24	0.1	1.93e-02	5.7	5.7	2.5	2.5	-42.0	-6.8	5.9	-1.3	-0.3	5.17e-02
502	ok	0.24	8.27e-02	1.96e-02	5.7	5.7	2.5	2.5	-25.1	-3.4	0.8	-0.7	-0.1	5.54e-02
549	ok	0.24	4.55e-02	2.64e-02	5.7	5.7	2.5	2.5	-44.3	-12.6	-19.1	-0.1	2.70e-02	2.93e-02
632	ok	0.24	0.5	0.1	5.7	5.7	2.5	2.5	-331.2	-39.6	57.1	-4.55e-02	1.93e-03	-2.29e-03
655	ok	0.24	0.3	4.82e-02	5.7	5.7	2.5	2.5	-67.7	2.4	-1.7	-2.6	-0.6	-0.1
678	ok	0.24	0.1	2.19e-02	5.7	5.7	2.5	2.5	-51.1	11.6	-8.3	-1.9	-0.4	-0.2
701	ok	0.24	7.56e-02	1.79e-02	5.7	5.7	2.5	2.5	-43.2	-7.2	-4.7	-1.3	-0.3	-0.1
724	ok	0.24	3.63e-02	1.81e-02	5.7	5.7	2.5	2.5	-31.9	-4.3	-0.3	-0.6	-0.1	-0.1
762	ok	0.24	4.29e-02	2.15e-02	5.7	5.7	2.5	2.5	-41.3	-7.2	-13.3	3.08e-03	6.29e-02	-0.2
797	ok	0.24	0.2	8.02e-02	5.7	5.7	2.5	2.5	-195.2	-21.1	32.5	4.36e-02	2.77e-03	-1.43e-03
820	ok	0.24	0.1	3.81e-02	5.7	5.7	2.5	2.5	-69.6	-31.0	34.0	4.95e-02	1.05e-02	-1.27e-03
843	ok	0.24	0.1	2.35e-02	5.7	5.7	2.5	2.5	-55.2	-1.2	-1.9	-0.2	-6.25e-02	-0.3
866	ok	0.24	7.40e-02	1.76e-02	5.7	5.7	2.5	2.5	-39.3	-4.6	-6.6	0.9	0.2	-0.2
889	ok	0.24	4.85e-02	1.82e-02	5.7	5.7	2.5	2.5	-35.2	-1.4	-9.3	0.4	9.76e-02	-0.2
927	ok	0.24	3.81e-02	1.62e-02	5.7	5.7	2.5	2.5	-37.5	0.2	-9.2	6.13e-03	2.63e-03	-0.2
977	ok	0.24	0.2	5.16e-02	5.7	5.7	2.5	2.5	-127.5	-16.9	14.9	0.1	2.13e-02	7.78e-03
1022	ok	0.24	0.1	3.35e-02	5.7	5.7	2.5	2.5	-69.1	-16.8	29.1	0.1	3.13e-02	-2.91e-04
1067	ok	0.24	9.77e-02	2.28e-02	5.7	5.7	2.5	2.5	-19.6	-10.8	29.8	0.1	3.07e-02	-1.85e-03
1112	ok	0.24	5.32e-02	1.79e-02	5.7	5.7	2.5	2.5	-42.6	-4.3	-6.6	1.0	0.2	-7.69e-02
1157	ok	0.24	3.15e-02	1.78e-02	5.7	5.7	2.5	2.5	-37.1	-1.7	-5.9	0.5	9.89e-02	-7.27e-02
1202	ok	0.24	2.17e-02	1.38e-02	5.7	5.7	2.5	2.5	-33.5	-1.1	-6.3	-5.89e-02	-1.53e-02	-7.27e-02
1237	ok	0.24	0.1	3.52e-02	5.7	5.7	2.5	2.5	-87.6	-2.5	7.9	-2.57e-02	9.56e-03	-9.35e-03
1260	ok	0.24	0.1	2.88e-02	5.7	5.7	2.5	2.5	-59.8	-10.4	18.3	-3.12e-02	-3.99e-03	-5.73e-03
1283	ok	0.24	8.66e-02	1.94e-02	5.7	5.7	2.5	2.5	-30.5	-8.6	16.9	-2.07e-02	-5.00e-03	-5.88e-03
1306	ok	0.24	5.33e-02	1.43e-02	5.7	5.7	2.5	2.5	-32.6	-2.2	-7.6	-0.9	-0.2	-0.2
1329	ok	0.24	2.91e-02	1.33e-02	5.7	5.7	2.5	2.5	-29.9	-0.6	-9.0	-0.4	-9.17e-02	-0.2
1367	ok	0.24	1.86e-02	1.29e-02	5.7	5.7	2.5	2.5	-28.1	7.35e-02	-7.4	-5.18e-03	-8.59e-04	-0.2
1402	ok	0.24	0.1	3.00e-02	5.7	5.7	2.5	2.5	-72.8	-2.6	5.5	7.94e-02	6.21e-03	-4.79e-03
1425	ok	0.24	0.1	2.64e-02	5.7	5.7	2.5	2.5	-55.5	-7.5	14.4	6.11e-02	1.48e-02	-4.58e-03
1448	ok	0.24	7.90e-02	1.95e-02	5.7	5.7	2.5	2.5	-32.0	-6.1	16.6	5.27e-02	1.18e-02	-5.65e-03
1471	ok	0.24	5.69e-02	1.46e-02	5.7	5.7	2.5	2.5	-26.7	-1.6	-9.5	0.9	0.2	-0.2
1494	ok	0.24	3.96e-02	1.27e-02	5.7	5.7	2.5	2.5	-25.5	-0.3	-10.2	0.4	9.96e-02	-0.2
1532	ok	0.24	2.26e-02	1.12e-02	5.7	5.7	2.5	2.5	-26.7	0.5	-6.1	-1.04e-03	-3.18e-02	-0.2
1582	ok	0.24	0.1	3.10e-02	5.7	5.7	2.5	2.5	-61.8	-5.5	-7.5	0.2	3.66e-02	9.12e-03
1627	ok	0.24	0.1	2.42e-02	5.7	5.7	2.5	2.5	-49.7	-7.2	10.7	0.1	3.11e-02	2.65e-04
1672	ok	0.24	8.00e-02	1.94e-02	5.7	5.7	2.5	2.5	-32.0	-5.3	16.1	0.1	2.78e-02	-8.05e-04
1717	ok	0.24	5.98e-02	1.49e-02	5.7	5.7	2.5	2.5	-28.4	-3.2	-10.4	1.0	0.2	-6.42e-02
1762	ok	0.24	3.89e-02	1.25e-02	5.7	5.7	2.5	2.5	-27.3	-2.3	-8.5	0.5	9.95e-02	-6.24e-02
1807	ok	0.24	2.67e-02	9.46e-03	5.7	5.7	2.5	2.5	-23.0	-2.1	-4.0	7.06e-02	-5.77e-03	-7.10e-02
1842	ok	0.24	0.1	2.37e-02	5.7	5.7	2.5	2.5	-48.4	0.4	2.6	-6.90e-02	4.17e-03	-1.13e-02
1865	ok	0.24	0.1	2.11e-02	5.7	5.7	2.5	2.5	-39.0	-3.5	7.6	-6.49e-02	-9.85e-03	-8.10e-03
1888	ok	0.24	8.62e-02	1.47e-02	5.7	5.7	2.5	2.5	-25.5	-4.9	8.9	-5.88e-02	-8.69e-03	-8.52e-03
1911	ok	0.24	6.55e-02	1.06e-02	5.7	5.7	2.5	2.5	-18.9	-2.1	-8.2	-0.9	-0.2	-0.2
1934	ok	0.24	4.17e-02	8.87e-03	5.7	5.7	2.5	2.5	-19.0	-1.8	-7.8	-0.4	-8.65e-02	-0.2
1972	ok	0.24	3.18e-02	8.42e-03	5.7	5.7	2.5	2.5	-16.2	7.27e-02	-6.0	-5.57e-03	-6.55e-03	-0.2
2007	ok	0.24	0.1	2.40e-02	5.7	5.7	2.5	2.5	-48.7	7.90e-02	-2.0	7.99e-02	5.51e-03	-1.45e-02
2030	ok	0.24	0.1	1.99e-02	5.7	5.7	2.5	2.5	-38.9	-3.8	-3.9	7.22e-02	1.82e-02	-1.32e-02
2053	ok	0.24	9.40e-02	1.34e-02	5.7	5.7	2.5	2.5	-23.5	-4.7	8.1	5.74e-02	1.14e-02	-1.01e-02
2076	ok	0.24	6.82e-02	1.01e-02	5.7	5.7	2.5	2.5	-17.4	-2.6	-7.8	4.60e-02	2.78e-02	-0.2
2099	ok	0.24	3.84e-02	8.08e-03	5.7	5.7	2.5	2.5	-14.9	-4.03e-02	-6.0	0.4	7.61e-02	-0.2
2137	ok	0.24	3.68e-02	6.86e-03	5.7	5.7	2.5	2.5	-15.5	0.4	-5.3	-2.97e-03	-4.00e-02	-0.2
2187	ok	0.24	0.1	2.72e-02	5.7	5.7	2.5	2.5	-54.0	-4.5	-7.3	0.2	4.30e-02	7.49e-03
2232	ok	0.24	0.1	1.88e-02	5.7	5.7	2.5	2.5	-27.9	-4.4	-10.0	-0.2	-4.34e-02	-1.09e-02
2277	ok	0.24	8.80e-02	1.20e-02	5.7	5.7	2.5	2.5	-23.3	-6.5	3.6	0.2	3.74e-02	-4.16e-03
2322	ok	0.24	6.77e-02	1.02e-02	5.7	5.7	2.5	2.5	-7.4	-2.0	4.8	-0.8	-0.2	-7.07e-02
2367	ok	0.24	4.19e-02	8.31e-03	5.7	5.7	2.5	2.5	-16.4	-2.1	-6.5	0.5	0.1	-6.15e-02
2412	ok	0.24	3.21e-02	5.10e-03	5.7	5.7	2.5	2.5	-12.0	-1.0	-2.9	5.97e-02	-1.33e-02	-7.28e-02
2452	ok	0.24	0.1	3.14e-02	5.7	5.7	2.5	2.5	-62.5	-4.7	-10.9	-8.81e-02	-1.18e-02	-3.19e-02
2475	ok	0.24	0.1	2.20e-02	5.7	5.7	2.5	2.5	-23.0	-11.6	-13.6	-1.70e-02	-1.76e-02	-4.22e-02
2498	ok	0.24	0.1	6.69e-03	5.7	5.7	2.5	2.5	-7.5	-7.7	4.5	-2.39e-02	-1.10e-02	-2.43e-02
2521	ok	0.24	8.50e-02	6.29e-03	5.7	5.7	2.5	2.5	-7.6	-2.1	7.2	-0.8	-0.2	-0.2
2544	ok	0.24	5.42e-02	4.74e-03	5.7	5.7	2.5	2.5	-3.1	-0.9	7.3	-0.3	-8.62e-02	-0.2
2582	ok	0.24	3.36e-02	3.58e-03	5.7	5.7	2.5	2.5	-8.7	0.3	-1.6	5.06e-03	-5.21e-03	-0.2
2770	ok	0.24	0.3	7.64e-02	5.7	5.7	2.5	2.5	-141.7	-24.3	-47.8	-4.3	-0.7	-9.42e-02
2793	ok	0.24	0.3	1.94e-02	5.7	5.7	2.5	2.5	60.1	-21.0	-12.5	-2.5	-0.3	-4.98e-02
2816	ok	0.24	0.2	6.85e-03	5.7	5.7	2.5	2.5	-6.7	-0.6	7.0	0.1	1.37e-02	-5.02e-03

2839	ok	0.24	7.81e-02	6.46e-03	5.7	5.7	2.5	2.5	-9.4	0.9	4.2	6.22e-02	1.40e-02	-9.61e-03
2862	ok	0.24	3.76e-02	4.57e-03	5.7	5.7	2.5	2.5	-4.1	-0.2	3.0	0.4	7.21e-02	-0.1
2900	ok	0.24	3.34e-02	3.18e-03	5.7	5.7	2.5	2.5	-2.9	-2.3	4.7	-0.1	-6.65e-02	-0.2
3087	ok	0.24	0.3	0.1	5.7	5.7	2.5	2.5	-182.4	-42.8	-82.7	0.9	8.73e-02	0.1
3134	ok	0.24	0.5	1.29e-02	5.7	5.7	2.5	2.5	100.4	26.8	15.5	-2.6	-0.4	-0.3
3181	ok	0.24	0.2	5.41e-03	5.7	5.7	2.5	2.5	-8.0	6.4	2.9	0.2	3.29e-02	1.46e-02
3228	ok	0.24	0.1	6.56e-03	5.7	5.7	2.5	2.5	-8.8	2.7	8.1	0.1	2.89e-02	1.14e-02
3275	ok	0.24	4.71e-02	4.89e-03	5.7	5.7	2.5	2.5	-5.2	1.6	-3.7	-0.3	-0.1	-5.65e-02
3322	ok	0.24	1.98e-02	2.09e-03	5.7	5.7	2.5	2.5	-2.1	7.22e-02	3.9	-0.1	3.58e-02	3.84e-03

Nodo	**x/d**	**V N/M**	**ver. rid**	**Af pr-**	**Af pr+**	**Af sec-**	**Af sec+**	**N z**	**N o**	**N zo**	**M z**	**M o**	**M zo**
								-404.93	-70.16	-82.67	-4.29	-0.72	-0.29
	0.24	0.53	0.17	5.65	5.65	2.51	2.51	100.43	26.75	102.04	1.00	0.20	0.15

Nodo	**Stato**	**Max tau**	**Ver V pr**	**Ver V sec**	**Af V pr**	**Af V sec**	**V pr**	**V sec**
		kN/ m2					kN/ m	kN/ m
314	ok	1.45						
361	ok	1.22						
408	ok	0.80						
455	ok	0.54						
502	ok	0.36						
549	ok	0.62						
632	ok	1.63						
655	ok	1.18						
678	ok	0.91						
701	ok	0.57						
724	ok	0.45						
762	ok	0.60						
797	ok	1.63						
820	ok	1.08						
843	ok	0.91						
866	ok	0.54						
889	ok	0.35						
927	ok	0.38						
977	ok	1.47						
1022	ok	1.10						
1067	ok	0.79						
1112	ok	0.54						
1157	ok	0.30						
1202	ok	0.38						
1237	ok	1.59						
1260	ok	1.12						
1283	ok	0.89						
1306	ok	0.56						
1329	ok	0.34						
1367	ok	0.29						
1402	ok	1.59						
1425	ok	1.11						
1448	ok	0.89						
1471	ok	0.54						
1494	ok	0.36						
1532	ok	0.32						
1582	ok	1.46						
1627	ok	1.10						
1672	ok	0.79						
1717	ok	0.54						
1762	ok	0.30						
1807	ok	0.33						
1842	ok	1.57						
1865	ok	1.12						
1888	ok	0.89						
1911	ok	0.56						
1934	ok	0.33						
1972	ok	0.31						
2007	ok	1.57						
2030	ok	1.10						
2053	ok	0.89						
2076	ok	0.54						
2099	ok	0.35						
2137	ok	0.29						
2187	ok	1.78						
2232	ok	1.11						
2277	ok	0.78						
2322	ok	0.52						
2367	ok	0.30						
2412	ok	0.32						
2452	ok	1.96						

2475	ok	1.12
2498	ok	0.79
2521	ok	0.45
2544	ok	0.26
2582	ok	0.34
2770	ok	2.12
2793	ok	1.10
2816	ok	0.84
2839	ok	0.44
2862	ok	0.26
2900	ok	0.44
3087	ok	2.14
3134	ok	1.14
3181	ok	0.75
3228	ok	0.44
3275	ok	0.26
3322	ok	0.43

Nodo	Max tau	Ver V pr	Ver V sec	Af V pr	Af V sec	V pr	V sec
	2.14						

Macro Setto	Spessore	Id Materiale	Id Criterio	Progettazione
	cm			
20	15.00	1	1	Singolo elemento NON DISSIPATIVO

Nodo	Stato	x/d	V N/M	ver. rid	Af pr-	Af pr+	Af sec-	Af sec+	N z	N o	N zo	M z	M o	M zo
									kN/ m	kN/ m	kN/ m	kN	kN	kN
316	ok	0.24	0.3	0.2	5.7	5.7	2.5	2.5	-377.1	-65.6	94.5	-8.53e-02	-4.20e-03	-2.82e-02
363	ok	0.24	0.3	3.11e-02	5.7	5.7	2.5	2.5	-68.8	-15.6	2.1	-2.7	-0.6	4.15e-02
410	ok	0.24	0.2	2.44e-02	5.7	5.7	2.5	2.5	-51.5	-12.6	-20.6	-2.0	-0.5	3.41e-02
457	ok	0.24	0.1	1.96e-02	5.7	5.7	2.5	2.5	-43.0	-7.2	6.1	-1.3	-0.3	5.15e-02
504	ok	0.24	7.99e-02	1.96e-02	5.7	5.7	2.5	2.5	-25.8	-3.6	1.4	-0.7	-0.2	5.67e-02
551	ok	0.24	4.57e-02	2.63e-02	5.7	5.7	2.5	2.5	-44.5	-12.5	-18.8	-0.1	2.96e-02	3.18e-02
633	ok	0.24	0.5	0.1	5.7	5.7	2.5	2.5	-314.7	-39.7	55.3	-5.44e-02	2.23e-03	-4.51e-03
656	ok	0.24	0.3	4.24e-02	5.7	5.7	2.5	2.5	-67.4	4.1	-3.6	-2.6	-0.6	-0.1
679	ok	0.24	0.1	2.23e-02	5.7	5.7	2.5	2.5	-52.1	12.2	-8.6	-1.9	-0.4	-0.2
702	ok	0.24	7.42e-02	1.81e-02	5.7	5.7	2.5	2.5	-44.1	-7.0	-4.6	-1.3	-0.3	-0.1
725	ok	0.24	3.92e-02	1.80e-02	5.7	5.7	2.5	2.5	-32.6	-4.3	-3.64e-03	-0.6	-0.1	-0.1
764	ok	0.24	4.35e-02	2.14e-02	5.7	5.7	2.5	2.5	-43.0	-11.5	-12.1	5.90e-03	0.1	-0.2
798	ok	0.24	0.2	7.63e-02	5.7	5.7	2.5	2.5	-185.1	-20.9	31.6	5.89e-02	3.44e-03	-3.00e-03
821	ok	0.24	0.1	3.45e-02	5.7	5.7	2.5	2.5	-65.3	-29.4	31.5	6.70e-02	1.27e-02	-9.56e-04
844	ok	0.24	0.1	2.38e-02	5.7	5.7	2.5	2.5	-39.5	3.0	-7.9	1.4	0.3	-0.2
867	ok	0.24	7.46e-02	1.79e-02	5.7	5.7	2.5	2.5	-40.1	-4.2	-6.8	0.9	0.2	-0.2
890	ok	0.24	4.89e-02	1.82e-02	5.7	5.7	2.5	2.5	-35.9	-1.3	-9.1	0.4	9.55e-02	-0.2
929	ok	0.24	3.81e-02	1.62e-02	5.7	5.7	2.5	2.5	-37.9	0.3	-8.7	7.05e-03	-1.13e-02	-0.2
979	ok	0.24	0.2	4.89e-02	5.7	5.7	2.5	2.5	-120.8	-16.4	14.4	0.2	2.95e-02	1.35e-02
1024	ok	0.24	0.1	3.10e-02	5.7	5.7	2.5	2.5	-64.7	-16.0	27.0	0.2	3.81e-02	2.86e-03
1069	ok	0.24	9.45e-02	2.15e-02	5.7	5.7	2.5	2.5	-45.6	-2.3	-8.3	1.5	0.3	-6.63e-02
1114	ok	0.24	5.28e-02	1.79e-02	5.7	5.7	2.5	2.5	-43.1	-4.0	-7.1	1.0	0.2	-7.85e-02
1159	ok	0.24	3.27e-02	1.78e-02	5.7	5.7	2.5	2.5	-37.6	-1.6	-5.9	0.5	9.96e-02	-7.59e-02
1204	ok	0.24	2.25e-02	1.40e-02	5.7	5.7	2.5	2.5	-33.8	-1.0	-6.4	-7.09e-02	-1.68e-02	-7.25e-02
1238	ok	0.24	0.1	3.30e-02	5.7	5.7	2.5	2.5	-82.2	-2.6	7.9	-6.31e-02	6.48e-03	-1.16e-02
1261	ok	0.24	0.1	2.64e-02	5.7	5.7	2.5	2.5	-55.6	-10.0	17.9	-5.68e-02	-9.65e-03	-7.96e-03
1284	ok	0.24	8.61e-02	1.82e-02	5.7	5.7	2.5	2.5	-29.0	-8.0	16.6	-2.87e-02	-6.91e-03	-8.86e-03
1307	ok	0.24	5.23e-02	1.44e-02	5.7	5.7	2.5	2.5	-32.7	-1.9	-8.1	-0.9	-0.2	-0.2
1330	ok	0.24	3.02e-02	1.35e-02	5.7	5.7	2.5	2.5	-30.3	-0.5	-9.3	-0.4	-8.96e-02	-0.2
1369	ok	0.24	1.93e-02	1.31e-02	5.7	5.7	2.5	2.5	-28.5	0.1	-7.6	-6.91e-03	-8.47e-04	-0.2
1403	ok	0.24	0.1	2.74e-02	5.7	5.7	2.5	2.5	-67.7	-2.6	5.6	9.09e-02	5.87e-03	-9.14e-03
1426	ok	0.24	0.1	2.42e-02	5.7	5.7	2.5	2.5	-51.2	-7.2	14.2	7.12e-02	1.68e-02	-7.34e-03
1449	ok	0.24	8.02e-02	1.83e-02	5.7	5.7	2.5	2.5	-30.5	-5.6	16.4	6.09e-02	1.34e-02	-8.87e-03
1472	ok	0.24	5.84e-02	1.43e-02	5.7	5.7	2.5	2.5	-26.8	-1.4	-9.9	0.9	0.2	-0.2
1495	ok	0.24	4.07e-02	1.29e-02	5.7	5.7	2.5	2.5	-25.8	-0.2	-10.6	0.4	9.77e-02	-0.2
1534	ok	0.24	2.29e-02	1.14e-02	5.7	5.7	2.5	2.5	-27.0	0.5	-6.5	-1.21e-04	-3.22e-02	-0.2
1584	ok	0.24	0.1	2.85e-02	5.7	5.7	2.5	2.5	-56.8	-5.3	-7.4	0.3	4.48e-02	1.16e-02
1629	ok	0.24	0.1	2.22e-02	5.7	5.7	2.5	2.5	-34.2	-3.6	7.7	-0.2	-4.55e-02	-6.09e-03
1674	ok	0.24	8.43e-02	1.82e-02	5.7	5.7	2.5	2.5	-30.0	-4.8	16.1	0.2	3.89e-02	-1.52e-03
1719	ok	0.24	6.25e-02	1.44e-02	5.7	5.7	2.5	2.5	-28.4	-3.0	-11.0	1.0	0.2	-6.56e-02
1764	ok	0.24	4.16e-02	1.26e-02	5.7	5.7	2.5	2.5	-27.5	-2.1	-9.0	0.5	0.1	-6.37e-02
1809	ok	0.24	2.77e-02	9.60e-03	5.7	5.7	2.5	2.5	-23.2	-2.1	-4.3	8.20e-02	-4.47e-03	-7.07e-02
1843	ok	0.24	0.1	2.09e-02	5.7	5.7	2.5	2.5	-43.0	0.3	3.0	-9.75e-02	2.61e-03	-1.39e-02
1866	ok	0.24	0.1	1.88e-02	5.7	5.7	2.5	2.5	-34.5	-3.0	8.9	-8.64e-02	-1.45e-02	-1.05e-02
1889	ok	0.24	9.09e-02	1.36e-02	5.7	5.7	2.5	2.5	-23.3	-4.0	10.0	-7.39e-02	-1.17e-02	-1.09e-02
1912	ok	0.24	6.72e-02	1.02e-02	5.7	5.7	2.5	2.5	-18.8	-1.9	-8.4	-0.9	-0.2	-0.2

1935	ok	0.24	4.33e-02	9.06e-03	5.7	5.7	2.5	2.5	-19.3	-1.5	-8.2	-0.4	-8.48e-02	-0.2
1974	ok	0.24	3.27e-02	8.63e-03	5.7	5.7	2.5	2.5	-16.6	0.1	-6.3	-7.26e-03	-7.46e-03	-0.2
2008	ok	0.24	0.1	2.07e-02	5.7	5.7	2.5	2.5	-41.9	5.70e-03	-1.9	9.47e-02	6.55e-03	-1.80e-02
2031	ok	0.24	0.1	1.74e-02	5.7	5.7	2.5	2.5	-30.8	-1.5	7.1	7.57e-02	1.98e-02	-1.02e-02
2054	ok	0.24	9.38e-02	1.26e-02	5.7	5.7	2.5	2.5	-21.5	-2.1	10.5	6.60e-02	1.68e-02	-1.32e-02
2077	ok	0.24	6.85e-02	9.91e-03	5.7	5.7	2.5	2.5	-17.4	-2.3	-8.0	5.22e-02	2.86e-02	-0.2
2100	ok	0.24	3.95e-02	8.26e-03	5.7	5.7	2.5	2.5	-15.0	0.2	-6.3	0.4	7.77e-02	-0.2
2139	ok	0.24	3.67e-02	7.06e-03	5.7	5.7	2.5	2.5	-15.8	0.4	-5.7	-2.16e-03	-4.13e-02	-0.2
2189	ok	0.24	0.2	2.31e-02	5.7	5.7	2.5	2.5	-45.5	-4.2	-6.9	0.3	5.19e-02	8.70e-03
2234	ok	0.24	0.1	1.61e-02	5.7	5.7	2.5	2.5	-22.9	-3.1	-5.8	-0.3	-5.43e-02	-1.39e-02
2279	ok	0.24	9.52e-02	1.16e-02	5.7	5.7	2.5	2.5	-13.9	-1.6	4.1	-1.3	-0.3	-8.59e-02
2324	ok	0.24	7.02e-02	1.00e-02	5.7	5.7	2.5	2.5	-7.2	9.27e-02	9.1	-0.8	-0.2	-7.55e-02
2369	ok	0.24	4.30e-02	8.23e-03	5.7	5.7	2.5	2.5	-16.6	-2.0	-7.0	0.5	0.1	-6.30e-02
2414	ok	0.24	3.23e-02	5.25e-03	5.7	5.7	2.5	2.5	-12.2	-1.1	-3.3	6.98e-02	-1.39e-02	-7.28e-02
2453	ok	0.24	0.1	2.62e-02	5.7	5.7	2.5	2.5	-62.2	-7.8	-13.7	-9.34e-02	-1.27e-02	-4.15e-02
2476	ok	0.24	0.1	1.41e-02	5.7	5.7	2.5	2.5	-13.9	-12.1	-10.5	9.67e-03	-1.21e-03	-3.20e-02
2499	ok	0.24	0.1	6.53e-03	5.7	5.7	2.5	2.5	-11.9	-1.3	7.0	-1.2	-0.3	-0.3
2522	ok	0.24	8.54e-02	6.09e-03	5.7	5.7	2.5	2.5	-7.8	1.5	8.6	-0.8	-0.2	-0.2
2545	ok	0.24	5.26e-02	4.57e-03	5.7	5.7	2.5	2.5	-3.1	-0.9	7.0	-0.3	-8.55e-02	-0.2
2584	ok	0.24	3.19e-02	3.73e-03	5.7	5.7	2.5	2.5	-8.9	0.3	-2.1	7.19e-03	-6.49e-03	-0.2
2771	ok	0.24	0.3	5.77e-02	5.7	5.7	2.5	2.5	-129.6	-26.2	-40.7	0.2	-3.96e-03	2.48e-02
2794	ok	0.24	0.3	1.54e-02	5.7	5.7	2.5	2.5	55.8	-10.8	-14.7	0.2	6.88e-02	2.12e-02
2817	ok	0.24	0.2	7.72e-03	5.7	5.7	2.5	2.5	-10.7	-1.6	5.8	0.6	7.77e-02	-0.2
2840	ok	0.24	7.69e-02	6.15e-03	5.7	5.7	2.5	2.5	-9.5	0.7	3.3	7.64e-02	1.67e-02	-1.12e-02
2863	ok	0.24	3.84e-02	4.38e-03	5.7	5.7	2.5	2.5	-6.5	0.7	-3.1	2.51e-02	2.82e-02	-1.61e-02
2902	ok	0.24	3.24e-02	3.04e-03	5.7	5.7	2.5	2.5	-3.0	-2.2	4.4	-0.1	-7.26e-02	-0.2
3089	ok	0.24	0.3	6.95e-02	5.7	5.7	2.5	2.5	-149.5	-35.9	-54.3	0.6	3.64e-02	7.02e-02
3136	ok	0.24	0.4	1.63e-02	5.7	5.7	2.5	2.5	79.5	18.9	2.4	0.1	6.02e-02	-1.96e-02
3183	ok	0.24	0.2	5.75e-03	5.7	5.7	2.5	2.5	-8.3	4.3	2.1	0.2	4.04e-02	1.98e-02
3230	ok	0.24	9.85e-02	6.41e-03	5.7	5.7	2.5	2.5	-9.0	1.9	7.4	0.1	3.49e-02	1.42e-02
3277	ok	0.24	4.55e-02	4.77e-03	5.7	5.7	2.5	2.5	-5.2	1.4	-4.0	-0.3	-0.1	-5.48e-02
3324	ok	0.24	2.02e-02	2.12e-03	5.7	5.7	2.5	2.5	-2.1	-0.1	3.9	-9.35e-02	3.27e-02	4.99e-03

Nodo	**x/d**	**V N/M**	**ver. rid**	**Af pr-**	**Af pr+**	**Af sec-**	**Af sec+**	**N z**	**N o**	**N zo**	**M z**	**M o**	**M zo**
								-377.10	-65.60	-54.31	-2.72	-0.62	-0.25
	0.24	0.53	0.16	5.65	5.65	2.51	2.51	79.47	18.93	94.54	1.50	0.30	0.07

Nodo	**Stato**	**Max tau** kN/ m2	**Ver V pr**	**Ver V sec**	**Af V pr**	**Af V sec**	**V pr** kN/ m	**V sec** kN/ m
316	ok	1.43						
363	ok	1.21						
410	ok	0.79						
457	ok	0.54						
504	ok	0.36						
551	ok	0.63						
633	ok	1.62						
656	ok	1.17						
679	ok	0.91						
702	ok	0.56						
725	ok	0.45						
764	ok	0.59						
798	ok	1.62						
821	ok	1.08						
844	ok	0.90						
867	ok	0.54						
890	ok	0.34						
929	ok	0.37						
979	ok	1.46						
1024	ok	1.10						
1069	ok	0.77						
1114	ok	0.53						
1159	ok	0.29						
1204	ok	0.38						
1238	ok	1.58						
1261	ok	1.11						
1284	ok	0.88						
1307	ok	0.55						
1330	ok	0.33						
1369	ok	0.29						
1403	ok	1.58						
1426	ok	1.10						
1449	ok	0.88						
1472	ok	0.53						
1495	ok	0.35						
1534	ok	0.32						
1584	ok	1.45						
1629	ok	1.10						

1674	ok	0.78
1719	ok	0.54
1764	ok	0.30
1809	ok	0.34
1843	ok	1.57
1866	ok	1.11
1889	ok	0.88
1912	ok	0.56
1935	ok	0.32
1974	ok	0.31
2008	ok	1.57
2031	ok	1.09
2054	ok	0.88
2077	ok	0.53
2100	ok	0.35
2139	ok	0.29
2189	ok	1.79
2234	ok	1.11
2279	ok	0.77
2324	ok	0.51
2369	ok	0.30
2414	ok	0.32
2453	ok	1.96
2476	ok	1.12
2499	ok	0.78
2522	ok	0.44
2545	ok	0.26
2584	ok	0.34
2771	ok	2.12
2794	ok	1.12
2817	ok	0.84
2840	ok	0.43
2863	ok	0.26
2902	ok	0.43
3089	ok	2.15
3136	ok	1.14
3183	ok	0.75
3230	ok	0.43
3277	ok	0.26
3324	ok	0.43

Nodo	Max tau	Ver V pr	Ver V sec	Af V pr	Af V sec	V pr	V sec
	2.15						

Macro Setto	Spessore	Id Materiale	Id Criterio	Progettazione
	cm			
21	15.00	1	1	Singolo elemento NON DISSIPATIVO

Nodo	Stato	x/d	V N/M	ver. rid	Af pr-	Af pr+	Af sec-	Af sec+	N z	N o	N zo	M z	M o	M zo
									kN/ m	kN/ m	kN/ m	kN	kN	kN
320	ok	0.24	0.3	0.2	5.7	5.7	2.5	2.5	-373.2	-65.2	92.9	-0.6	-4.51e-02	4.30e-02
367	ok	0.24	0.3	3.21e-02	5.7	5.7	2.5	2.5	-70.3	-16.2	1.6	-2.8	-0.6	5.66e-02
414	ok	0.24	0.2	2.50e-02	5.7	5.7	2.5	2.5	-53.4	-13.2	-20.5	-2.1	-0.5	3.62e-02
461	ok	0.24	0.1	1.95e-02	5.7	5.7	2.5	2.5	-43.9	-7.4	6.5	-1.4	-0.3	5.38e-02
508	ok	0.24	7.68e-02	1.94e-02	5.7	5.7	2.5	2.5	-26.2	-3.6	1.8	-0.7	-0.2	5.86e-02
555	ok	0.24	4.58e-02	2.60e-02	5.7	5.7	2.5	2.5	-45.0	-12.4	-18.5	-0.1	3.43e-02	3.24e-02
635	ok	0.24	0.5	0.1	5.7	5.7	2.5	2.5	-314.9	-40.6	55.8	-0.2	-6.72e-03	-1.88e-02
658	ok	0.24	0.3	4.08e-02	5.7	5.7	2.5	2.5	-68.5	5.3	-4.3	-2.6	-0.6	-0.1
681	ok	0.24	0.1	2.28e-02	5.7	5.7	2.5	2.5	-53.4	12.9	-8.7	-1.9	-0.4	-0.2
704	ok	0.24	7.27e-02	1.81e-02	5.7	5.7	2.5	2.5	-45.0	-6.9	-4.2	-1.2	-0.3	-0.1
727	ok	0.24	4.15e-02	1.79e-02	5.7	5.7	2.5	2.5	-33.0	-4.3	0.4	-0.6	-0.1	-0.1
768	ok	0.24	4.47e-02	2.12e-02	5.7	5.7	2.5	2.5	-43.6	-11.7	-11.8	1.88e-02	0.1	-0.2
800	ok	0.24	0.2	7.64e-02	5.7	5.7	2.5	2.5	-185.4	-21.3	32.1	5.86e-02	3.13e-03	-3.01e-02
823	ok	0.24	0.2	3.41e-02	5.7	5.7	2.5	2.5	-65.5	-29.3	31.4	7.39e-02	1.75e-02	-2.45e-02
846	ok	0.24	0.1	2.43e-02	5.7	5.7	2.5	2.5	-40.1	3.7	-8.3	1.4	0.3	-0.2
869	ok	0.24	7.63e-02	1.81e-02	5.7	5.7	2.5	2.5	-40.8	-4.0	-6.6	0.9	0.2	-0.2
892	ok	0.24	4.83e-02	1.82e-02	5.7	5.7	2.5	2.5	-36.4	-1.2	-8.8	0.4	9.38e-02	-0.2
933	ok	0.24	3.75e-02	1.63e-02	5.7	5.7	2.5	2.5	-38.5	0.2	-8.4	1.22e-02	1.98e-03	-0.2
983	ok	0.24	0.2	4.90e-02	5.7	5.7	2.5	2.5	-120.8	-16.5	14.8	0.3	4.48e-02	8.58e-04
1028	ok	0.24	0.1	3.10e-02	5.7	5.7	2.5	2.5	-64.7	-16.0	27.1	0.3	5.50e-02	-7.33e-03
1073	ok	0.24	9.32e-02	2.13e-02	5.7	5.7	2.5	2.5	-45.9	-1.9	-8.8	1.5	0.3	-6.50e-02
1118	ok	0.24	5.18e-02	1.80e-02	5.7	5.7	2.5	2.5	-31.3	-1.2	-10.6	-1.0	-0.2	-6.82e-02
1163	ok	0.24	3.32e-02	1.78e-02	5.7	5.7	2.5	2.5	-30.0	-2.6	-11.2	-0.5	-0.1	-6.33e-02

1208	ok	0.24	2.41e-02	1.42e-02	5.7	5.7	2.5	2.5	-34.5	-0.7	-3.3	8.54e-02	2.02e-02	-6.90e-02
1240	ok	0.24	0.1	3.30e-02	5.7	5.7	2.5	2.5	-81.9	-2.8	8.1	-3.79e-02	1.82e-02	-1.63e-02
1263	ok	0.24	0.1	2.57e-02	5.7	5.7	2.5	2.5	-55.5	-10.0	18.0	-4.37e-02	-1.04e-02	-1.23e-02
1286	ok	0.24	8.60e-02	1.80e-02	5.7	5.7	2.5	2.5	-29.2	-7.8	16.8	-5.44e-02	-1.40e-02	-1.17e-02
1309	ok	0.24	5.06e-02	1.47e-02	5.7	5.7	2.5	2.5	-33.2	-1.7	-8.2	-0.9	-0.2	-0.2
1332	ok	0.24	3.03e-02	1.37e-02	5.7	5.7	2.5	2.5	-30.9	-0.4	-9.4	-0.4	-9.01e-02	-0.2
1373	ok	0.24	2.07e-02	1.33e-02	5.7	5.7	2.5	2.5	-31.9	0.2	-6.7	1.54e-02	2.39e-02	-0.2
1405	ok	0.24	0.1	2.70e-02	5.7	5.7	2.5	2.5	-67.3	-2.6	5.7	0.1	8.66e-03	-1.20e-02
1428	ok	0.24	0.1	2.36e-02	5.7	5.7	2.5	2.5	-51.1	-7.2	14.4	9.31e-02	1.59e-02	-1.07e-02
1451	ok	0.24	7.90e-02	1.81e-02	5.7	5.7	2.5	2.5	-30.6	-5.5	16.6	7.92e-02	1.30e-02	-1.16e-02
1474	ok	0.24	5.77e-02	1.43e-02	5.7	5.7	2.5	2.5	-27.2	-1.3	-10.1	0.9	0.2	-0.2
1497	ok	0.24	4.02e-02	1.31e-02	5.7	5.7	2.5	2.5	-26.2	-0.1	-10.7	0.4	9.92e-02	-0.2
1538	ok	0.24	2.12e-02	1.16e-02	5.7	5.7	2.5	2.5	-27.6	0.5	-6.5	4.19e-03	-2.28e-02	-0.2
1588	ok	0.24	0.1	2.78e-02	5.7	5.7	2.5	2.5	-45.8	-3.6	4.0	-2.5	-0.5	-4.96e-03
1633	ok	0.24	0.1	2.17e-02	5.7	5.7	2.5	2.5	-34.1	-3.4	7.3	-2.0	-0.4	-8.30e-02
1678	ok	0.24	7.88e-02	1.79e-02	5.7	5.7	2.5	2.5	-30.1	-5.8	11.5	0.2	4.09e-02	-4.78e-03
1723	ok	0.24	5.96e-02	1.44e-02	5.7	5.7	2.5	2.5	-28.7	-3.1	-11.2	1.0	0.2	-6.42e-02
1768	ok	0.24	4.06e-02	1.27e-02	5.7	5.7	2.5	2.5	-27.5	-2.4	-8.1	0.5	0.1	-6.03e-02
1813	ok	0.24	2.89e-02	9.81e-03	5.7	5.7	2.5	2.5	-23.7	-2.3	-4.4	9.57e-02	6.87e-03	-6.64e-02
1845	ok	0.24	0.1	2.01e-02	5.7	5.7	2.5	2.5	-43.0	0.2	2.6	-2.3	-0.4	-0.1
1868	ok	0.24	0.1	1.83e-02	5.7	5.7	2.5	2.5	-35.4	-2.0	5.9	-1.8	-0.3	-0.2
1891	ok	0.24	8.81e-02	1.34e-02	5.7	5.7	2.5	2.5	-21.9	-2.4	9.8	-6.42e-02	-4.94e-02	-0.2
1914	ok	0.24	6.26e-02	1.02e-02	5.7	5.7	2.5	2.5	-19.1	-1.9	-8.6	-0.9	-0.2	-0.2
1937	ok	0.24	4.11e-02	9.28e-03	5.7	5.7	2.5	2.5	-19.9	-1.6	-7.8	-0.4	-9.11e-02	-0.2
1978	ok	0.24	3.00e-02	8.83e-03	5.7	5.7	2.5	2.5	-20.2	0.4	-6.4	1.96e-02	1.40e-02	-0.2
2010	ok	0.24	0.1	1.99e-02	5.7	5.7	2.5	2.5	-40.4	-5.48e-03	-1.9	0.1	7.97e-03	-2.63e-02
2033	ok	0.24	0.1	1.69e-02	5.7	5.7	2.5	2.5	-30.8	-1.7	6.4	8.66e-02	5.13e-02	-0.2
2056	ok	0.24	9.13e-02	1.25e-02	5.7	5.7	2.5	2.5	-21.5	-2.2	9.8	8.10e-02	5.09e-02	-0.2
2079	ok	0.24	6.79e-02	9.90e-03	5.7	5.7	2.5	2.5	-17.6	-2.4	-8.2	7.20e-02	3.21e-02	-0.2
2102	ok	0.24	3.99e-02	8.42e-03	5.7	5.7	2.5	2.5	-15.3	7.87e-02	-6.4	0.4	7.52e-02	-0.2
2143	ok	0.24	3.50e-02	7.23e-03	5.7	5.7	2.5	2.5	-16.2	0.4	-5.8	-1.45e-03	-3.73e-02	-0.2
2193	ok	0.24	0.2	2.22e-02	5.7	5.7	2.5	2.5	-36.2	-3.8	-8.1	-2.5	-0.5	-0.1
2238	ok	0.24	0.1	1.57e-02	5.7	5.7	2.5	2.5	-14.7	-2.3	-6.8	-1.9	-0.4	-0.1
2283	ok	0.24	9.14e-02	1.15e-02	5.7	5.7	2.5	2.5	-14.0	-1.7	4.1	-1.3	-0.3	-9.14e-02
2328	ok	0.24	6.97e-02	9.98e-03	5.7	5.7	2.5	2.5	-7.4	-4.17e-02	9.0	-0.8	-0.2	-8.11e-02
2373	ok	0.24	4.25e-02	8.27e-03	5.7	5.7	2.5	2.5	-16.8	-2.2	-7.1	0.5	0.1	-6.16e-02
2418	ok	0.24	3.26e-02	5.39e-03	5.7	5.7	2.5	2.5	-12.6	-1.3	-3.2	8.52e-02	-7.85e-03	-6.89e-02
2455	ok	0.24	0.2	2.77e-02	5.7	5.7	2.5	2.5	-43.2	-4.3	-10.1	-2.3	-0.4	-0.3
2478	ok	0.24	0.1	1.31e-02	5.7	5.7	2.5	2.5	-15.0	-12.4	-9.9	-1.7	-0.4	-0.3
2501	ok	0.24	0.1	6.50e-03	5.7	5.7	2.5	2.5	-12.2	-1.4	6.8	-1.2	-0.3	-0.3
2524	ok	0.24	8.25e-02	5.96e-03	5.7	5.7	2.5	2.5	-7.9	1.2	8.4	-0.7	-0.2	-0.2
2547	ok	0.24	5.30e-02	4.54e-03	5.7	5.7	2.5	2.5	-3.4	-1.0	6.9	-0.3	-8.63e-02	-0.2
2588	ok	0.24	3.18e-02	3.84e-03	5.7	5.7	2.5	2.5	-9.2	0.4	-2.1	3.66e-02	2.06e-03	-0.2
2773	ok	0.24	0.3	5.87e-02	5.7	5.7	2.5	2.5	-132.9	-27.0	-39.7	4.6	0.7	7.69e-02
2796	ok	0.24	0.3	1.67e-02	5.7	5.7	2.5	2.5	34.5	-1.8	10.8	2.9	0.6	9.40e-03
2819	ok	0.24	0.1	8.32e-03	5.7	5.7	2.5	2.5	-6.3	1.4	4.9	3.4	0.6	-7.10e-02
2842	ok	0.24	7.51e-02	5.99e-03	5.7	5.7	2.5	2.5	-9.5	0.4	2.9	0.1	2.33e-02	-1.53e-02
2865	ok	0.24	3.82e-02	4.35e-03	5.7	5.7	2.5	2.5	-6.3	-0.4	5.0	0.2	3.40e-02	-0.3
2906	ok	0.24	3.39e-02	3.12e-03	5.7	5.7	2.5	2.5	-4.4	-1.9	4.0	-0.2	-0.1	-0.3
3093	ok	0.24	0.3	6.88e-02	5.7	5.7	2.5	2.5	-151.0	-34.9	-52.2	4.6	0.8	0.4
3140	ok	0.24	0.4	1.77e-02	5.7	5.7	2.5	2.5	76.8	18.4	-1.96e-03	3.0	0.5	0.3
3187	ok	0.24	0.2	5.66e-03	5.7	5.7	2.5	2.5	-5.9	6.5	12.7	2.1	0.5	0.2
3234	ok	0.24	0.1	6.26e-03	5.7	5.7	2.5	2.5	-9.4	0.8	0.4	0.2	4.76e-02	2.05e-02
3281	ok	0.24	4.67e-02	4.72e-03	5.7	5.7	2.5	2.5	-4.9	1.0	-4.4	-0.3	-9.74e-02	-4.48e-02
3328	ok	0.24	1.77e-02	2.53e-03	5.7	5.7	2.5	2.5	-3.6	-0.7	3.8	-0.1	3.15e-02	1.27e-02

Nodo	**x/d**	**V N/M**	**ver. rid**	**Af pr-**	**Af pr+**	**Af sec-**	**Af sec+**	**N z**	**N o**	**N zo**	**M z**	**M o**	**M zo**
								-373.22	-65.17	-52.18	-2.78	-0.62	-0.34
	0.24	0.55	0.16	5.65	5.65	2.51	2.51	76.79	18.44	92.86	4.62	0.78	0.38

Nodo	**Stato**	**Max tau** kN/ m2	**Ver V pr**	**Ver V sec**	**Af V pr**	**Af V sec**	**V pr** kN/ m	**V sec** kN/ m
320	ok	1.48						
367	ok	1.20						
414	ok	0.78						
461	ok	0.53						
508	ok	0.35						
555	ok	0.62						
635	ok	1.63						
658	ok	1.17						
681	ok	0.89						
704	ok	0.55						
727	ok	0.44						
768	ok	0.56						
800	ok	1.63						
823	ok	1.08						
846	ok	0.89						

869	ok	0.53
892	ok	0.33
933	ok	0.36
983	ok	1.45
1028	ok	1.09
1073	ok	0.76
1118	ok	0.53
1163	ok	0.29
1208	ok	0.37
1240	ok	1.56
1263	ok	1.10
1286	ok	0.86
1309	ok	0.54
1332	ok	0.33
1373	ok	0.32
1405	ok	1.56
1428	ok	1.09
1451	ok	0.86
1474	ok	0.53
1497	ok	0.35
1538	ok	0.31
1588	ok	1.42
1633	ok	1.08
1678	ok	0.76
1723	ok	0.53
1768	ok	0.29
1813	ok	0.34
1845	ok	1.54
1868	ok	1.09
1891	ok	0.86
1914	ok	0.55
1937	ok	0.32
1978	ok	0.32
2010	ok	1.54
2033	ok	1.07
2056	ok	0.86
2079	ok	0.52
2102	ok	0.34
2143	ok	0.32
2193	ok	1.71
2238	ok	1.10
2283	ok	0.75
2328	ok	0.50
2373	ok	0.29
2418	ok	0.35
2455	ok	1.90
2478	ok	1.10
2501	ok	0.78
2524	ok	0.44
2547	ok	0.26
2588	ok	0.35
2773	ok	1.94
2796	ok	1.11
2819	ok	0.84
2842	ok	0.43
2865	ok	0.26
2906	ok	0.42
3093	ok	1.93
3140	ok	1.19
3187	ok	0.74
3234	ok	0.42
3281	ok	0.26
3328	ok	0.43

Nodo	Max tau	Ver V pr	Ver V sec	Af V pr	Af V sec	V pr	V sec
	1.94						

Macro Setto	Spessore	Id Materiale	Id Criterio	Progettazione
	cm			
22	15.00	1	1	Singolo elemento NON DISSIPATIVO

Nodo	Stato	x/d	V N/M	ver. rid	Af pr-	Af pr+	Af sec-	Af sec+	N z	N o	N zo	M z	M o	M zo
									kN/ m	kN/ m	kN/ m	kN	kN	kN

322	ok	0.24	0.3	0.2	5.7	5.7	2.5	2.5	-397.2	-69.3	98.7	-0.5	-4.36e-02	3.34e-02
369	ok	0.24	0.3	3.17e-02	5.7	5.7	2.5	2.5	-71.9	-16.3	2.4	-2.8	-0.6	5.35e-02
416	ok	0.24	0.2	2.49e-02	5.7	5.7	2.5	2.5	-53.2	-12.9	-20.4	-2.1	-0.5	3.61e-02
463	ok	0.24	0.1	1.91e-02	5.7	5.7	2.5	2.5	-43.8	-7.1	6.6	-1.4	-0.3	5.27e-02
510	ok	0.24	7.79e-02	1.92e-02	5.7	5.7	2.5	2.5	-26.0	-3.4	1.6	-0.7	-0.2	5.88e-02
557	ok	0.24	4.61e-02	2.59e-02	5.7	5.7	2.5	2.5	-45.2	-12.3	-18.5	-0.2	3.80e-02	3.42e-02
636	ok	0.24	0.5	0.1	5.7	5.7	2.5	2.5	-331.5	-41.3	58.0	-0.2	-6.43e-03	-1.95e-02
659	ok	0.24	0.3	4.49e-02	5.7	5.7	2.5	2.5	-70.1	4.7	-2.9	-2.5	-0.5	-0.1
682	ok	0.24	0.1	2.30e-02	5.7	5.7	2.5	2.5	-53.8	13.0	-8.3	-1.9	-0.4	-0.2
705	ok	0.24	7.26e-02	1.81e-02	5.7	5.7	2.5	2.5	-45.0	-7.1	-4.0	-1.2	-0.3	-0.1
728	ok	0.24	4.39e-02	1.78e-02	5.7	5.7	2.5	2.5	-32.8	-4.4	0.4	-0.6	-0.1	-0.1
770	ok	0.24	4.63e-02	2.13e-02	5.7	5.7	2.5	2.5	-43.7	-11.7	-12.0	3.27e-02	0.1	-0.2
801	ok	0.24	0.2	8.05e-02	5.7	5.7	2.5	2.5	-195.6	-21.9	33.3	7.09e-02	3.49e-03	-2.98e-02
824	ok	0.24	0.1	3.65e-02	5.7	5.7	2.5	2.5	-70.2	-30.8	33.8	9.09e-02	1.95e-02	-2.25e-02
847	ok	0.24	0.1	2.45e-02	5.7	5.7	2.5	2.5	-57.3	-0.1	-2.1	-0.2	-5.24e-02	-0.3
870	ok	0.24	7.62e-02	1.82e-02	5.7	5.7	2.5	2.5	-40.9	-4.2	-6.2	0.9	0.2	-0.2
893	ok	0.24	4.81e-02	1.81e-02	5.7	5.7	2.5	2.5	-36.4	-1.2	-8.8	0.4	9.08e-02	-0.2
935	ok	0.24	3.97e-02	1.62e-02	5.7	5.7	2.5	2.5	-38.6	0.1	-8.6	1.20e-02	2.37e-03	-0.2
985	ok	0.24	0.2	5.17e-02	5.7	5.7	2.5	2.5	-127.5	-17.1	15.6	0.4	5.14e-02	6.69e-03
1030	ok	0.24	0.1	3.33e-02	5.7	5.7	2.5	2.5	-69.3	-16.8	29.2	0.3	6.09e-02	-3.92e-03
1075	ok	0.24	9.51e-02	2.24e-02	5.7	5.7	2.5	2.5	-46.9	-2.2	-8.0	1.5	0.3	-6.50e-02
1120	ok	0.24	5.11e-02	1.81e-02	5.7	5.7	2.5	2.5	-31.6	-1.4	-10.5	-1.0	-0.2	-6.82e-02
1165	ok	0.24	3.32e-02	1.78e-02	5.7	5.7	2.5	2.5	-30.1	-2.8	-11.2	-0.5	-0.1	-6.44e-02
1210	ok	0.24	2.51e-02	1.43e-02	5.7	5.7	2.5	2.5	-34.5	-1.2	-6.5	-0.1	-9.20e-03	-6.63e-02
1241	ok	0.24	0.1	3.51e-02	5.7	5.7	2.5	2.5	-87.3	-2.8	8.3	-7.08e-02	1.54e-02	-1.81e-02
1264	ok	0.24	9.83e-02	2.75e-02	5.7	5.7	2.5	2.5	-59.7	-10.4	18.6	-6.50e-02	-1.50e-02	-1.39e-02
1287	ok	0.24	8.36e-02	1.90e-02	5.7	5.7	2.5	2.5	-31.4	-10.9	11.3	-1.4	-0.3	-0.2
1310	ok	0.24	4.97e-02	1.48e-02	5.7	5.7	2.5	2.5	-33.6	-1.9	-8.1	-0.9	-0.2	-0.2
1333	ok	0.24	3.00e-02	1.38e-02	5.7	5.7	2.5	2.5	-32.1	-2.8	-8.6	-0.4	-9.63e-02	-0.2
1375	ok	0.24	2.07e-02	1.33e-02	5.7	5.7	2.5	2.5	-32.0	1.69e-02	-6.8	1.90e-02	2.36e-02	-0.2
1406	ok	0.24	0.1	2.89e-02	5.7	5.7	2.5	2.5	-72.2	-2.7	5.9	0.1	8.32e-03	-1.59e-02
1429	ok	0.24	0.1	2.53e-02	5.7	5.7	2.5	2.5	-55.3	-7.5	14.8	0.1	1.76e-02	-1.29e-02
1452	ok	0.24	7.66e-02	1.91e-02	5.7	5.7	2.5	2.5	-32.3	-5.9	16.9	8.70e-02	1.46e-02	-1.41e-02
1475	ok	0.24	5.62e-02	1.47e-02	5.7	5.7	2.5	2.5	-27.5	-1.4	-10.1	0.9	0.2	-0.2
1498	ok	0.24	3.95e-02	1.31e-02	5.7	5.7	2.5	2.5	-26.4	-0.2	-10.7	0.4	9.80e-02	-0.2
1540	ok	0.24	2.01e-02	1.17e-02	5.7	5.7	2.5	2.5	-27.7	0.5	-6.5	3.28e-03	-2.62e-02	-0.2
1590	ok	0.24	0.1	2.95e-02	5.7	5.7	2.5	2.5	-64.1	-7.0	0.5	0.3	4.80e-02	1.05e-02
1635	ok	0.24	0.1	2.33e-02	5.7	5.7	2.5	2.5	-47.6	-5.9	9.4	0.3	6.05e-02	-1.15e-02
1680	ok	0.24	7.80e-02	1.89e-02	5.7	5.7	2.5	2.5	-32.3	-6.5	11.7	0.2	4.66e-02	-3.98e-03
1725	ok	0.24	5.47e-02	1.48e-02	5.7	5.7	2.5	2.5	-29.1	-3.3	-11.1	1.0	0.2	-6.45e-02
1770	ok	0.24	3.68e-02	1.28e-02	5.7	5.7	2.5	2.5	-27.7	-2.6	-8.1	0.5	0.1	-6.23e-02
1815	ok	0.24	2.86e-02	9.93e-03	5.7	5.7	2.5	2.5	-24.0	-2.3	-4.4	0.1	5.72e-03	-6.51e-02
1846	ok	0.24	0.1	2.23e-02	5.7	5.7	2.5	2.5	-47.4	0.2	2.9	-9.47e-02	1.02e-02	-2.20e-02
1869	ok	0.24	0.1	2.01e-02	5.7	5.7	2.5	2.5	-38.5	-3.4	8.0	-8.23e-02	-1.86e-02	-1.76e-02
1892	ok	0.24	8.04e-02	1.43e-02	5.7	5.7	2.5	2.5	-25.6	-4.8	9.3	-6.72e-02	-1.39e-02	-1.65e-02
1915	ok	0.24	5.77e-02	1.06e-02	5.7	5.7	2.5	2.5	-19.4	-2.2	-8.9	-0.9	-0.2	-0.2
1938	ok	0.24	3.75e-02	9.37e-03	5.7	5.7	2.5	2.5	-20.1	-1.9	-8.0	-0.4	-9.48e-02	-0.2
1980	ok	0.24	2.85e-02	8.93e-03	5.7	5.7	2.5	2.5	-20.4	0.2	-6.5	5.77e-02	1.24e-02	-0.2
2011	ok	0.24	0.1	2.26e-02	5.7	5.7	2.5	2.5	-45.8	5.80e-02	-2.0	0.1	8.83e-03	-2.94e-02
2034	ok	0.24	0.1	1.90e-02	5.7	5.7	2.5	2.5	-37.5	-3.4	-2.5	0.1	3.49e-02	-2.03e-02
2057	ok	0.24	9.07e-02	1.32e-02	5.7	5.7	2.5	2.5	-22.1	-4.3	7.4	1.4	0.3	-0.2
2080	ok	0.24	6.68e-02	1.00e-02	5.7	5.7	2.5	2.5	-15.8	-2.6	9.3	0.9	0.2	-0.2
2103	ok	0.24	3.85e-02	8.50e-03	5.7	5.7	2.5	2.5	-15.6	-0.2	-6.5	0.4	7.60e-02	-0.2
2145	ok	0.24	3.43e-02	7.30e-03	5.7	5.7	2.5	2.5	-16.4	0.4	-5.8	-2.88e-03	-4.20e-02	-0.2
2195	ok	0.24	0.1	2.56e-02	5.7	5.7	2.5	2.5	-37.4	-3.2	-6.9	-2.5	-0.5	-0.1
2240	ok	0.24	0.1	1.81e-02	5.7	5.7	2.5	2.5	-17.5	-3.1	-8.1	-1.9	-0.4	-0.1
2285	ok	0.24	8.56e-02	1.19e-02	5.7	5.7	2.5	2.5	-21.1	-3.8	5.9	1.5	0.3	-6.49e-02
2330	ok	0.24	6.62e-02	1.00e-02	5.7	5.7	2.5	2.5	-15.9	-2.1	11.7	1.0	0.2	-7.24e-02
2375	ok	0.24	4.02e-02	8.34e-03	5.7	5.7	2.5	2.5	-16.9	-1.8	-7.1	0.5	0.1	-6.17e-02
2420	ok	0.24	3.26e-02	5.48e-03	5.7	5.7	2.5	2.5	-12.9	-1.3	-3.2	9.83e-02	-1.04e-02	-6.78e-02
2456	ok	0.24	0.1	2.88e-02	5.7	5.7	2.5	2.5	-66.5	-6.2	-11.7	1.5	0.3	-0.4
2479	ok	0.24	0.1	2.03e-02	5.7	5.7	2.5	2.5	-12.7	-8.3	-13.2	-1.7	-0.3	-0.3
2502	ok	0.24	0.1	6.11e-03	5.7	5.7	2.5	2.5	-9.5	-3.0	4.3	0.5	7.26e-02	-0.3
2525	ok	0.24	8.08e-02	5.94e-03	5.7	5.7	2.5	2.5	-6.5	-1.4	4.5	0.4	4.61e-02	-0.4
2548	ok	0.24	5.25e-02	4.62e-03	5.7	5.7	2.5	2.5	-3.6	-1.1	7.0	-0.3	-8.40e-02	-0.2
2590	ok	0.24	3.37e-02	3.89e-03	5.7	5.7	2.5	2.5	-9.3	0.5	-2.0	3.86e-02	9.19e-04	-0.2
2774	ok	0.24	0.3	6.89e-02	5.7	5.7	2.5	2.5	-144.8	-24.3	-45.7	4.7	0.7	8.57e-02
2797	ok	0.24	0.3	1.76e-02	5.7	5.7	2.5	2.5	32.7	-1.7	10.8	2.9	0.6	1.30e-02
2820	ok	0.24	0.1	7.50e-03	5.7	5.7	2.5	2.5	-5.5	1.4	5.5	3.4	0.6	-7.19e-02
2843	ok	0.24	7.43e-02	6.06e-03	5.7	5.7	2.5	2.5	-7.6	-0.1	5.2	0.5	7.31e-02	-0.3
2866	ok	0.24	3.63e-02	4.46e-03	5.7	5.7	2.5	2.5	-4.5	-0.5	2.9	0.4	6.91e-02	-0.1
2908	ok	0.24	3.49e-02	3.30e-03	5.7	5.7	2.5	2.5	-4.5	-1.8	4.2	-0.2	-0.1	-0.3
3095	ok	0.24	0.2	0.1	5.7	5.7	2.5	2.5	-173.9	-40.8	-66.2	4.7	0.8	0.4
3142	ok	0.24	0.5	1.52e-02	5.7	5.7	2.5	2.5	27.6	18.3	3.4	3.0	0.7	0.2
3189	ok	0.24	0.2	5.10e-03	5.7	5.7	2.5	2.5	-3.0	6.9	13.1	2.1	0.5	0.2
3236	ok	0.24	0.1	6.19e-03	5.7	5.7	2.5	2.5	-8.6	1.8	7.1	0.2	5.07e-02	2.37e-02
3283	ok	0.24	4.83e-02	4.73e-03	5.7	5.7	2.5	2.5	-6.4	-0.8	1.0	0.8	0.3	0.1
3330	ok	0.24	1.58e-02	2.63e-03	5.7	5.7	2.5	2.5	-3.7	-0.7	3.9	-0.1	2.46e-02	1.26e-02

Nodo	x/d	V N/M	ver. rid	Af pr-	Af pr+	Af sec-	Af sec+	N z	N o	N zo	M z	M o	M zo
								-397.21	-69.31	-66.15	-2.76	-0.61	-0.44
	0.24	0.55	0.17	5.65	5.65	2.51	2.51	32.67	18.31	98.69	4.72	0.79	0.41

Nodo	Stato	Max tau	Ver V pr	Ver V sec	Af V pr	Af V sec	V pr	V sec
		kN/ m2					kN/ m	kN/ m
322	ok	1.44						
369	ok	1.19						
416	ok	0.77						
463	ok	0.52						
510	ok	0.35						
557	ok	0.62						
636	ok	1.60						
659	ok	1.15						
682	ok	0.88						
705	ok	0.55						
728	ok	0.43						
770	ok	0.54						
801	ok	1.60						
824	ok	1.06						
847	ok	0.88						
870	ok	0.52						
893	ok	0.33						
935	ok	0.36						
985	ok	1.43						
1030	ok	1.08						
1075	ok	0.76						
1120	ok	0.52						
1165	ok	0.28						
1210	ok	0.38						
1241	ok	1.53						
1264	ok	1.08						
1287	ok	0.86						
1310	ok	0.54						
1333	ok	0.33						
1375	ok	0.32						
1406	ok	1.54						
1429	ok	1.07						
1452	ok	0.86						
1475	ok	0.52						
1498	ok	0.34						
1540	ok	0.34						
1590	ok	1.40						
1635	ok	1.07						
1680	ok	0.76						
1725	ok	0.52						
1770	ok	0.29						
1815	ok	0.35						
1846	ok	1.52						
1869	ok	1.08						
1892	ok	0.85						
1915	ok	0.54						
1938	ok	0.32						
1980	ok	0.33						
2011	ok	1.52						
2034	ok	1.06						
2057	ok	0.85						
2080	ok	0.52						
2103	ok	0.34						
2145	ok	0.32						
2195	ok	1.72						
2240	ok	1.09						
2285	ok	0.75						
2330	ok	0.50						
2375	ok	0.29						
2420	ok	0.36						
2456	ok	1.90						
2479	ok	1.09						
2502	ok	0.77						
2525	ok	0.44						
2548	ok	0.26						
2590	ok	0.36						
2774	ok	1.97						
2797	ok	1.09						
2820	ok	0.83						
2843	ok	0.42						

2866	ok	0.26
2908	ok	0.42
3095	ok	1.96
3142	ok	1.16
3189	ok	0.74
3236	ok	0.42
3283	ok	0.26
3330	ok	0.43

Nodo	Max tau	Ver V pr	Ver V sec	Af V pr	Af V sec	V pr	V sec
	1.97						

Macro Setto	Spessore	Id Materiale	Id Criterio	Progettazione
	cm			
23	15.00	1	1	Singolo elemento NON DISSIPATIVO

Nodo	Stato	x/d	V N/M	ver. rid	Af pr-	Af pr+	Af sec-	Af sec+	N z	N o	N zo	M z	M o	M zo
									kN/ m	kN/ m	kN/ m	kN	kN	kN
324	ok	0.24	0.3	0.2	5.7	5.7	2.5	2.5	-402.2	-70.3	99.6	-0.4	-2.77e-02	-1.05e-04
371	ok	0.24	0.3	3.23e-02	5.7	5.7	2.5	2.5	-72.8	-16.4	2.6	-2.7	-0.6	4.06e-02
418	ok	0.24	0.1	2.49e-02	5.7	5.7	2.5	2.5	-53.5	-12.8	-20.2	-2.0	-0.5	3.19e-02
465	ok	0.24	0.1	1.88e-02	5.7	5.7	2.5	2.5	-43.3	-6.8	6.8	-1.3	-0.3	4.90e-02
512	ok	0.24	7.82e-02	1.88e-02	5.7	5.7	2.5	2.5	-25.2	-3.2	1.8	-0.7	-0.2	5.25e-02
559	ok	0.24	4.66e-02	2.56e-02	5.7	5.7	2.5	2.5	-44.9	-12.1	-18.4	-0.2	4.17e-02	3.31e-02
637	ok	0.24	0.6	0.1	5.7	5.7	2.5	2.5	-335.7	-41.5	58.5	-0.2	-8.78e-04	-1.18e-02
660	ok	0.24	0.3	4.57e-02	5.7	5.7	2.5	2.5	-70.8	5.4	-2.7	-2.5	-0.5	-0.1
683	ok	0.24	0.1	2.31e-02	5.7	5.7	2.5	2.5	-54.1	13.6	-8.0	-1.8	-0.4	-0.2
706	ok	0.24	6.87e-02	1.79e-02	5.7	5.7	2.5	2.5	-44.6	-7.0	-3.7	-1.2	-0.2	-0.1
729	ok	0.24	4.55e-02	1.76e-02	5.7	5.7	2.5	2.5	-32.1	-4.5	0.4	-0.6	-0.1	-0.1
772	ok	0.24	4.92e-02	2.11e-02	5.7	5.7	2.5	2.5	-43.6	-11.9	-12.0	4.80e-02	0.1	-0.2
802	ok	0.24	0.2	8.17e-02	5.7	5.7	2.5	2.5	-198.5	-22.1	33.6	7.86e-02	4.83e-03	-1.73e-02
825	ok	0.24	0.2	3.73e-02	5.7	5.7	2.5	2.5	-72.1	-31.0	34.6	8.88e-02	1.73e-02	-1.25e-02
848	ok	0.24	0.1	2.46e-02	5.7	5.7	2.5	2.5	-57.5	0.1	-1.7	-0.2	-5.03e-02	-0.3
871	ok	0.24	7.69e-02	1.81e-02	5.7	5.7	2.5	2.5	-40.8	-4.2	-5.9	0.8	0.2	-0.2
894	ok	0.24	4.65e-02	1.79e-02	5.7	5.7	2.5	2.5	-36.2	-1.2	-8.7	0.4	8.93e-02	-0.2
937	ok	0.24	4.00e-02	1.62e-02	5.7	5.7	2.5	2.5	-38.5	6.83e-02	-8.5	6.36e-03	-5.32e-03	-0.2
987	ok	0.24	0.2	5.25e-02	5.7	5.7	2.5	2.5	-129.5	-17.3	16.0	0.3	4.85e-02	1.20e-02
1032	ok	0.24	0.1	3.41e-02	5.7	5.7	2.5	2.5	-71.1	-17.0	29.9	0.3	6.26e-02	-1.72e-03
1077	ok	0.24	9.54e-02	2.28e-02	5.7	5.7	2.5	2.5	-46.8	-2.1	-7.9	1.5	0.3	-6.61e-02
1122	ok	0.24	4.98e-02	1.81e-02	5.7	5.7	2.5	2.5	-31.3	-1.4	-10.9	-1.0	-0.2	-7.11e-02
1167	ok	0.24	3.42e-02	1.77e-02	5.7	5.7	2.5	2.5	-30.1	-2.9	-11.7	-0.5	-0.1	-6.73e-02
1212	ok	0.24	2.66e-02	1.46e-02	5.7	5.7	2.5	2.5	-35.0	-1.3	-7.1	-0.1	-2.23e-02	-6.41e-02
1242	ok	0.24	0.1	3.58e-02	5.7	5.7	2.5	2.5	-89.0	-2.9	8.4	-6.79e-02	1.78e-02	-2.15e-02
1265	ok	0.24	9.60e-02	2.78e-02	5.7	5.7	2.5	2.5	-61.3	-10.5	18.8	-6.23e-02	-1.14e-02	-1.48e-02
1288	ok	0.24	8.11e-02	1.92e-02	5.7	5.7	2.5	2.5	-31.9	-12.0	13.8	-7.38e-02	-1.50e-02	-1.36e-02
1311	ok	0.24	4.82e-02	1.48e-02	5.7	5.7	2.5	2.5	-33.4	-1.9	-8.4	-0.9	-0.2	-0.2
1334	ok	0.24	3.13e-02	1.39e-02	5.7	5.7	2.5	2.5	-32.2	-2.9	-9.0	-0.4	-9.96e-02	-0.2
1377	ok	0.24	2.12e-02	1.37e-02	5.7	5.7	2.5	2.5	-29.7	5.78e-02	-8.4	-1.80e-02	2.54e-03	-0.2
1407	ok	0.24	0.1	2.96e-02	5.7	5.7	2.5	2.5	-73.8	-2.8	6.0	0.1	1.02e-02	-1.66e-02
1430	ok	0.24	0.1	2.56e-02	5.7	5.7	2.5	2.5	-56.9	-7.6	14.9	0.1	2.19e-02	-1.41e-02
1453	ok	0.24	7.31e-02	1.93e-02	5.7	5.7	2.5	2.5	-32.9	-6.0	17.0	9.69e-02	1.79e-02	-1.45e-02
1476	ok	0.24	5.40e-02	1.48e-02	5.7	5.7	2.5	2.5	-27.5	-1.5	-10.5	0.9	0.2	-0.2
1499	ok	0.24	4.09e-02	1.33e-02	5.7	5.7	2.5	2.5	-26.5	-0.3	-11.3	0.4	9.88e-02	-0.2
1542	ok	0.24	2.09e-02	1.20e-02	5.7	5.7	2.5	2.5	-25.5	0.9	-7.5	-1.37e-02	-5.19e-02	-0.2
1592	ok	0.24	0.1	2.97e-02	5.7	5.7	2.5	2.5	-50.9	-3.9	4.3	-0.4	-5.25e-02	1.33e-02
1637	ok	0.24	0.1	2.37e-02	5.7	5.7	2.5	2.5	-39.6	-4.0	6.8	-0.3	-7.12e-02	-1.28e-02
1682	ok	0.24	7.73e-02	1.91e-02	5.7	5.7	2.5	2.5	-26.5	-5.5	7.6	-0.2	-4.92e-02	-3.70e-03
1727	ok	0.24	5.22e-02	1.50e-02	5.7	5.7	2.5	2.5	-29.1	-3.3	-11.6	1.0	0.2	-6.54e-02
1772	ok	0.24	3.49e-02	1.30e-02	5.7	5.7	2.5	2.5	-27.9	-2.7	-8.6	0.5	0.1	-6.30e-02
1817	ok	0.24	2.89e-02	1.03e-02	5.7	5.7	2.5	2.5	-24.8	-2.4	-4.8	0.1	-9.75e-04	-6.30e-02
1847	ok	0.24	0.1	2.27e-02	5.7	5.7	2.5	2.5	-49.1	0.2	2.9	-0.1	1.28e-02	-2.49e-02
1870	ok	0.24	9.83e-02	2.05e-02	5.7	5.7	2.5	2.5	-40.0	-3.6	7.7	-8.79e-02	-1.69e-02	-1.84e-02
1893	ok	0.24	7.49e-02	1.45e-02	5.7	5.7	2.5	2.5	-26.5	-5.1	9.0	-7.20e-02	-1.39e-02	-1.85e-02
1916	ok	0.24	5.41e-02	1.08e-02	5.7	5.7	2.5	2.5	-19.3	-2.2	-9.6	-0.9	-0.2	-0.2
1939	ok	0.24	3.53e-02	9.66e-03	5.7	5.7	2.5	2.5	-20.4	-2.1	-8.6	-0.4	-9.61e-02	-0.2
1982	ok	0.24	2.81e-02	9.33e-03	5.7	5.7	2.5	2.5	-21.1	0.2	-7.1	5.10e-02	4.72e-03	-0.2
2012	ok	0.24	0.1	2.33e-02	5.7	5.7	2.5	2.5	-45.4	1.5	-1.1	0.2	-1.50e-02	-3.53e-02
2035	ok	0.24	0.1	1.96e-02	5.7	5.7	2.5	2.5	-38.6	-3.5	-3.2	0.1	4.56e-02	-2.05e-02
2058	ok	0.24	8.87e-02	1.35e-02	5.7	5.7	2.5	2.5	-25.7	-5.6	-0.4	0.1	2.58e-02	-2.68e-02
2081	ok	0.24	6.52e-02	1.02e-02	5.7	5.7	2.5	2.5	-17.9	-2.8	-9.1	8.81e-02	3.56e-02	-0.2
2104	ok	0.24	3.73e-02	8.75e-03	5.7	5.7	2.5	2.5	-15.8	-0.2	-7.1	0.4	8.09e-02	-0.2
2147	ok	0.24	3.46e-02	7.66e-03	5.7	5.7	2.5	2.5	-13.7	0.9	-5.7	-1.51e-02	-6.38e-02	-0.2
2197	ok	0.24	0.1	2.66e-02	5.7	5.7	2.5	2.5	-37.0	-2.9	-6.7	-2.6	-0.5	-0.1

2242	ok	0.24	0.1	1.89e-02	5.7	5.7	2.5	2.5	-17.8	-3.4	-8.8	-2.0	-0.4	-0.1
2287	ok	0.24	8.34e-02	1.22e-02	5.7	5.7	2.5	2.5	-23.3	-6.7	2.3	0.4	7.27e-02	-1.02e-02
2332	ok	0.24	6.42e-02	9.93e-03	5.7	5.7	2.5	2.5	-9.6	-3.1	3.9	-0.2	-3.82e-02	-9.84e-03
2377	ok	0.24	3.92e-02	8.47e-03	5.7	5.7	2.5	2.5	-17.1	-2.0	-7.7	0.5	0.1	-6.05e-02
2422	ok	0.24	3.25e-02	5.75e-03	5.7	5.7	2.5	2.5	-13.4	-1.4	-3.6	0.1	-1.74e-02	-6.66e-02
2457	ok	0.24	0.1	3.14e-02	5.7	5.7	2.5	2.5	-65.8	-4.7	-10.8	1.4	0.3	-0.4
2480	ok	0.24	0.1	2.29e-02	5.7	5.7	2.5	2.5	-8.1	-10.6	-22.4	0.9	0.2	-0.3
2503	ok	0.24	0.1	6.14e-03	5.7	5.7	2.5	2.5	-9.2	-3.6	4.1	0.4	6.51e-02	-0.3
2526	ok	0.24	7.95e-02	5.79e-03	5.7	5.7	2.5	2.5	-6.6	-1.6	4.5	0.4	4.46e-02	-0.4
2549	ok	0.24	5.15e-02	4.63e-03	5.7	5.7	2.5	2.5	-5.6	-0.6	5.4	0.1	1.51e-02	-0.4
2592	ok	0.24	3.38e-02	4.12e-03	5.7	5.7	2.5	2.5	-9.2	0.2	-3.4	1.68e-02	6.34e-03	-2.32e-02
2775	ok	0.24	0.2	7.70e-02	5.7	5.7	2.5	2.5	-148.3	-25.2	-48.7	0.4	2.22e-02	1.63e-03
2798	ok	0.24	0.3	2.00e-02	5.7	5.7	2.5	2.5	31.3	-3.1	10.6	2.9	0.6	1.92e-02
2821	ok	0.24	0.1	7.13e-03	5.7	5.7	2.5	2.5	-4.1	0.8	7.2	3.3	0.6	-7.13e-02
2844	ok	0.24	7.23e-02	5.95e-03	5.7	5.7	2.5	2.5	-6.6	0.6	5.0	1.8	0.3	-0.1
2867	ok	0.24	3.54e-02	4.44e-03	5.7	5.7	2.5	2.5	-5.6	0.1	4.9	0.7	0.1	-0.2
2910	ok	0.24	3.54e-02	3.43e-03	5.7	5.7	2.5	2.5	-4.6	-1.7	4.3	-0.2	-0.2	-0.3
3097	ok	0.24	0.2	0.1	5.7	5.7	2.5	2.5	-185.0	-44.1	-83.6	0.8	8.36e-02	9.89e-02
3144	ok	0.24	0.5	1.43e-02	5.7	5.7	2.5	2.5	24.4	17.8	2.3	3.1	0.7	0.2
3191	ok	0.24	0.2	4.73e-03	5.7	5.7	2.5	2.5	-1.9	6.6	13.0	2.0	0.5	0.2
3238	ok	0.24	0.1	6.01e-03	5.7	5.7	2.5	2.5	-5.8	1.7	4.3	1.1	0.2	0.1
3285	ok	0.24	4.71e-02	4.64e-03	5.7	5.7	2.5	2.5	-6.4	-0.8	1.0	0.8	0.3	0.1
3332	ok	0.24	1.60e-02	2.72e-03	5.7	5.7	2.5	2.5	-3.7	-0.7	4.2	-0.1	1.91e-02	1.17e-02

Nodo	**x/d**	**V N/M**	**ver. rid**	**Af pr-**	**Af pr+**	**Af sec-**	**Af sec+**	**N z**	**N o**	**N zo**	**M z**	**M o**	**M zo**
								-402.15	-70.34	-83.58	-2.69	-0.60	-0.43
	0.24	0.56	0.17	5.65	5.65	2.51	2.51	31.28	17.84	99.57	3.28	0.68	0.24

Nodo	**Stato**	**Max tau**	**Ver V pr**	**Ver V sec**	**Af V pr**	**Af V sec**	**V pr**	**V sec**
		kN/ m2					kN/ m	kN/ m
324	ok	1.36						
371	ok	1.16						
418	ok	0.75						
465	ok	0.51						
512	ok	0.33						
559	ok	0.62						
637	ok	1.54						
660	ok	1.12						
683	ok	0.86						
706	ok	0.53						
729	ok	0.41						
772	ok	0.52						
802	ok	1.55						
825	ok	1.02						
848	ok	0.85						
871	ok	0.50						
894	ok	0.33						
937	ok	0.38						
987	ok	1.39						
1032	ok	1.06						
1077	ok	0.75						
1122	ok	0.51						
1167	ok	0.28						
1212	ok	0.40						
1242	ok	1.51						
1265	ok	1.06						
1288	ok	0.84						
1311	ok	0.53						
1334	ok	0.32						
1377	ok	0.33						
1407	ok	1.51						
1430	ok	1.06						
1453	ok	0.84						
1476	ok	0.51						
1499	ok	0.35						
1542	ok	0.34						
1592	ok	1.39						
1637	ok	1.06						
1682	ok	0.75						
1727	ok	0.51						
1772	ok	0.29						
1817	ok	0.37						
1847	ok	1.50						
1870	ok	1.07						
1893	ok	0.84						
1916	ok	0.53						
1939	ok	0.31						

1982	ok	0.33
2012	ok	1.50
2035	ok	1.05
2058	ok	0.84
2081	ok	0.51
2104	ok	0.34
2147	ok	0.32
2197	ok	1.73
2242	ok	1.08
2287	ok	0.74
2332	ok	0.49
2377	ok	0.29
2422	ok	0.36
2457	ok	1.90
2480	ok	1.08
2503	ok	0.76
2526	ok	0.43
2549	ok	0.25
2592	ok	0.36
2775	ok	2.01
2798	ok	1.08
2821	ok	0.82
2844	ok	0.42
2867	ok	0.26
2910	ok	0.41
3097	ok	2.02
3144	ok	1.12
3191	ok	0.73
3238	ok	0.41
3285	ok	0.25
3332	ok	0.42

Nodo	Max tau	Ver V pr	Ver V sec	Af V pr	Af V sec	V pr	V sec
	2.02						

Macro Setto	Spessore	Id Materiale	Id Criterio	Progettazione
	cm			
24	15.00	1	1	Singolo elemento NON DISSIPATIVO

Nodo	Stato	x/d	V N/M	ver. rid	Af pr-	Af pr+	Af sec-	Af sec+	N z	N o	N zo	M z	M o	M zo
									kN/ m	kN/ m	kN/ m	kN	kN	kN
326	ok	0.24	0.4	0.2	5.7	5.7	2.5	2.5	-378.1	-68.1	93.9	2.5	0.4	-5.17e-02
373	ok	0.24	0.3	3.36e-02	5.7	5.7	2.5	2.5	-70.5	-15.7	1.4	-2.7	-0.6	2.40e-02
420	ok	0.24	0.1	2.45e-02	5.7	5.7	2.5	2.5	-52.7	-12.1	-19.9	-2.0	-0.5	2.42e-02
467	ok	0.24	0.1	1.84e-02	5.7	5.7	2.5	2.5	-42.5	-8.2	-8.7	-1.4	-0.2	4.05e-02
514	ok	0.24	8.90e-02	1.80e-02	5.7	5.7	2.5	2.5	-31.1	-6.6	-6.8	0.2	3.86e-02	-2.13e-02
561	ok	0.24	5.09e-02	2.55e-02	5.7	5.7	2.5	2.5	-45.2	-12.1	-20.4	-0.3	2.21e-02	2.81e-02
638	ok	0.24	0.6	0.1	5.7	5.7	2.5	2.5	-321.2	-41.9	57.5	2.6	0.4	0.1
661	ok	0.24	0.3	4.15e-02	5.7	5.7	2.5	2.5	-67.8	8.3	-4.6	-2.4	-0.5	-0.1
684	ok	0.24	0.1	2.24e-02	5.7	5.7	2.5	2.5	-52.1	15.4	-8.1	-1.8	-0.4	-0.2
707	ok	0.24	6.13e-02	1.74e-02	5.7	5.7	2.5	2.5	-42.4	-6.6	-6.4	-1.2	-0.2	-0.1
730	ok	0.24	3.69e-02	1.71e-02	5.7	5.7	2.5	2.5	-28.5	-10.2	-13.6	-0.6	-0.1	-0.2
774	ok	0.24	4.30e-02	2.14e-02	5.7	5.7	2.5	2.5	-43.2	-8.8	-15.6	-4.47e-02	4.13e-02	-0.2
803	ok	0.24	0.3	7.80e-02	5.7	5.7	2.5	2.5	-188.9	-22.0	33.2	0.4	0.1	0.3
826	ok	0.24	0.2	3.55e-02	5.7	5.7	2.5	2.5	-55.3	-5.6	45.2	0.3	0.1	0.2
849	ok	0.24	0.1	2.40e-02	5.7	5.7	2.5	2.5	-38.0	5.2	-9.3	1.3	0.2	-0.2
872	ok	0.24	8.40e-02	1.74e-02	5.7	5.7	2.5	2.5	-39.3	-3.8	-7.7	0.9	0.2	-0.2
895	ok	0.24	5.26e-02	1.78e-02	5.7	5.7	2.5	2.5	-35.8	-1.5	-10.7	0.4	0.1	-0.2
939	ok	0.24	4.41e-02	1.75e-02	5.7	5.7	2.5	2.5	-40.7	-7.14e-02	-11.6	-5.86e-02	-3.79e-02	-0.2
989	ok	0.24	0.2	5.01e-02	5.7	5.7	2.5	2.5	-123.6	-16.9	15.1	0.3	4.09e-02	2.11e-02
1034	ok	0.24	0.1	3.24e-02	5.7	5.7	2.5	2.5	-68.1	-16.3	27.8	0.3	6.16e-02	2.63e-03
1079	ok	0.24	9.40e-02	2.20e-02	5.7	5.7	2.5	2.5	-43.6	-1.0	-10.0	1.5	0.3	-6.20e-02
1124	ok	0.24	5.43e-02	1.77e-02	5.7	5.7	2.5	2.5	-30.5	-0.8	-13.3	-1.1	-0.2	-6.72e-02
1169	ok	0.24	4.16e-02	1.78e-02	5.7	5.7	2.5	2.5	-30.6	-0.2	-11.5	-0.6	-0.1	-6.26e-02
1214	ok	0.24	2.99e-02	1.66e-02	5.7	5.7	2.5	2.5	-38.9	-1.5	-10.0	-0.2	-4.47e-02	-5.54e-02
1243	ok	0.24	0.1	3.40e-02	5.7	5.7	2.5	2.5	-84.4	-3.1	8.4	-4.33e-02	2.49e-02	-2.60e-02
1266	ok	0.24	9.72e-02	2.57e-02	5.7	5.7	2.5	2.5	-58.1	-10.1	18.0	-3.88e-02	-2.99e-03	-1.44e-02
1289	ok	0.24	8.41e-02	1.84e-02	5.7	5.7	2.5	2.5	-30.5	-11.3	13.2	-8.21e-02	-1.75e-02	-1.35e-02
1312	ok	0.24	5.30e-02	1.50e-02	5.7	5.7	2.5	2.5	-32.5	-1.5	-11.0	-0.9	-0.2	-0.2
1335	ok	0.24	3.77e-02	1.50e-02	5.7	5.7	2.5	2.5	-33.1	-2.8	-11.8	-0.5	-0.1	-0.2
1379	ok	0.24	2.95e-02	1.57e-02	5.7	5.7	2.5	2.5	-33.5	0.1	-11.2	-2.01e-02	5.85e-04	-0.2
1408	ok	0.24	0.1	2.80e-02	5.7	5.7	2.5	2.5	-69.7	-2.8	5.9	0.2	1.35e-02	-1.60e-02
1431	ok	0.24	0.1	2.37e-02	5.7	5.7	2.5	2.5	-53.7	-7.3	14.4	0.1	2.95e-02	-1.44e-02

1454	ok	0.24	7.98e-02	1.84e-02	5.7	5.7	2.5	2.5	-31.2	-8.8	13.2	5.22e-02	1.36e-02	-1.39e-02
1477	ok	0.24	5.92e-02	1.47e-02	5.7	5.7	2.5	2.5	-27.0	-1.2	-13.2	0.9	0.2	-0.2
1500	ok	0.24	5.02e-02	1.44e-02	5.7	5.7	2.5	2.5	-27.8	-0.6	-10.6	0.4	9.71e-02	-0.2
1544	ok	0.24	2.77e-02	1.39e-02	5.7	5.7	2.5	2.5	-26.8	1.0	-8.9	-1.96e-02	-5.77e-02	-0.2
1594	ok	0.24	0.1	2.73e-02	5.7	5.7	2.5	2.5	-46.9	-3.6	4.4	-0.4	-6.05e-02	1.76e-02
1639	ok	0.24	0.1	2.19e-02	5.7	5.7	2.5	2.5	-36.4	-3.6	7.3	-0.4	-8.20e-02	-1.28e-02
1684	ok	0.24	7.67e-02	1.82e-02	5.7	5.7	2.5	2.5	-24.8	-3.7	11.9	-0.3	-5.73e-02	-2.85e-03
1729	ok	0.24	5.41e-02	1.49e-02	5.7	5.7	2.5	2.5	-28.6	-2.9	-14.3	1.1	0.2	-6.74e-02
1774	ok	0.24	3.50e-02	1.35e-02	5.7	5.7	2.5	2.5	-29.2	-2.5	-11.3	0.6	0.1	-6.00e-02
1819	ok	0.24	3.21e-02	1.18e-02	5.7	5.7	2.5	2.5	-25.8	-2.6	-6.2	0.2	-1.78e-03	-6.21e-02
1848	ok	0.24	0.1	2.04e-02	5.7	5.7	2.5	2.5	-45.2	6.08e-02	3.3	-0.1	1.84e-02	-2.93e-02
1871	ok	0.24	9.68e-02	1.88e-02	5.7	5.7	2.5	2.5	-36.8	-3.2	8.7	-9.08e-02	-1.44e-02	-1.96e-02
1894	ok	0.24	7.42e-02	1.38e-02	5.7	5.7	2.5	2.5	-24.9	-4.4	10.1	-7.27e-02	-1.27e-02	-2.12e-02
1917	ok	0.24	5.46e-02	1.07e-02	5.7	5.7	2.5	2.5	-17.6	-1.8	-11.7	-0.1	-2.23e-02	-2.73e-02
1940	ok	0.24	3.69e-02	1.02e-02	5.7	5.7	2.5	2.5	-20.0	-2.0	-10.7	-8.37e-02	-2.81e-02	-2.96e-02
1984	ok	0.24	2.82e-02	1.07e-02	5.7	5.7	2.5	2.5	-23.7	0.2	-8.9	8.34e-03	1.89e-02	-2.43e-02
2013	ok	0.24	0.1	2.08e-02	5.7	5.7	2.5	2.5	-40.4	1.3	-1.1	0.2	-2.00e-02	-3.94e-02
2036	ok	0.24	0.1	1.78e-02	5.7	5.7	2.5	2.5	-34.9	-3.1	-2.5	0.2	6.47e-02	-1.98e-02
2059	ok	0.24	8.42e-02	1.28e-02	5.7	5.7	2.5	2.5	-24.4	-4.8	-0.1	0.2	3.57e-02	-2.95e-02
2082	ok	0.24	6.14e-02	1.01e-02	5.7	5.7	2.5	2.5	-17.7	-2.5	-10.0	0.1	3.58e-02	-0.2
2105	ok	0.24	3.60e-02	9.29e-03	5.7	5.7	2.5	2.5	-16.5	7.68e-03	-7.7	0.4	8.61e-02	-0.2
2149	ok	0.24	3.62e-02	8.83e-03	5.7	5.7	2.5	2.5	-14.3	1.2	-6.1	-4.12e-02	-6.59e-02	-0.2
2199	ok	0.24	0.1	2.37e-02	5.7	5.7	2.5	2.5	-36.0	-3.6	-7.8	-2.7	-0.5	-9.86e-02
2244	ok	0.24	0.1	1.71e-02	5.7	5.7	2.5	2.5	-16.0	-3.0	-8.6	-2.0	-0.4	-0.1
2289	ok	0.24	8.39e-02	1.17e-02	5.7	5.7	2.5	2.5	-22.5	-5.7	2.5	0.5	9.43e-02	-5.41e-03
2334	ok	0.24	6.16e-02	9.82e-03	5.7	5.7	2.5	2.5	-9.7	-2.5	3.7	-0.3	-4.69e-02	-4.31e-03
2379	ok	0.24	3.77e-02	8.85e-03	5.7	5.7	2.5	2.5	-17.7	-1.8	-8.5	0.5	0.1	-5.67e-02
2424	ok	0.24	3.25e-02	6.64e-03	5.7	5.7	2.5	2.5	-13.6	-1.5	-4.0	0.1	-1.83e-02	-6.39e-02
2458	ok	0.24	0.1	2.82e-02	5.7	5.7	2.5	2.5	-48.3	-4.1	-10.3	-2.2	-0.4	-0.3
2481	ok	0.24	0.1	1.84e-02	5.7	5.7	2.5	2.5	-12.0	-7.9	-13.4	-1.6	-0.3	-0.3
2504	ok	0.24	0.1	6.14e-03	5.7	5.7	2.5	2.5	-9.9	-2.9	3.4	0.4	5.42e-02	-0.3
2527	ok	0.24	7.25e-02	5.52e-03	5.7	5.7	2.5	2.5	-6.8	-1.7	3.7	0.3	3.75e-02	-0.4
2550	ok	0.24	4.76e-02	4.64e-03	5.7	5.7	2.5	2.5	-5.8	-0.9	4.8	9.78e-02	1.75e-02	-0.4
2594	ok	0.24	3.35e-02	4.72e-03	5.7	5.7	2.5	2.5	-6.8	0.8	-1.7	1.81e-02	-1.36e-02	-0.2
2776	ok	0.24	0.2	6.52e-02	5.7	5.7	2.5	2.5	-146.7	-28.4	-45.8	4.5	0.7	0.1
2799	ok	0.24	0.3	1.53e-02	5.7	5.7	2.5	2.5	36.1	-3.8	10.4	3.0	0.6	2.33e-02
2822	ok	0.24	0.1	8.04e-03	5.7	5.7	2.5	2.5	-4.9	-1.0	6.2	3.1	0.5	-7.89e-02
2845	ok	0.24	6.77e-02	5.52e-03	5.7	5.7	2.5	2.5	-6.6	-0.5	4.5	1.8	0.3	-0.1
2868	ok	0.24	3.30e-02	4.32e-03	5.7	5.7	2.5	2.5	-5.8	-1.0	4.7	0.7	9.61e-02	-0.2
2912	ok	0.24	3.48e-02	3.64e-03	5.7	5.7	2.5	2.5	-6.6	0.3	-1.3	1.79e-02	-7.72e-02	-0.2
3099	ok	0.24	0.2	8.83e-02	5.7	5.7	2.5	2.5	-173.5	-43.7	-63.9	5.0	0.8	0.4
3146	ok	0.24	0.4	1.77e-02	5.7	5.7	2.5	2.5	92.9	20.5	5.2	2.9	0.5	0.2
3193	ok	0.24	0.2	5.26e-03	5.7	5.7	2.5	2.5	-6.8	0.6	3.5	3.3	0.6	0.3
3240	ok	0.24	8.95e-02	5.58e-03	5.7	5.7	2.5	2.5	-7.7	-1.3	2.8	1.9	0.4	0.2
3287	ok	0.24	4.03e-02	4.43e-03	5.7	5.7	2.5	2.5	-6.8	-1.6	5.7	0.8	0.1	0.1
3334	ok	0.24	1.64e-02	2.58e-03	5.7	5.7	2.5	2.5	-1.3	-0.4	4.3	4.71e-02	-9.54e-04	9.78e-03

Nodo	**x/d**	**V N/M**	**ver. rid**	**Af pr-**	**Af pr+**	**Af sec-**	**Af sec+**	**N z**	**N o**	**N zo**	**M z**	**M o**	**M zo**
								-378.09	-68.13	-63.91	-2.71	-0.60	-0.42
	0.24	0.59	0.16	5.65	5.65	2.51	2.51	92.89	20.49	93.93	5.02	0.76	0.43

Nodo	**Stato**	**Max tau** kN/ m2	**Ver V pr**	**Ver V sec**	**Af V pr**	**Af V sec**	**V pr** kN/ m	**V sec** kN/ m
326	ok	1.28						
373	ok	1.12						
420	ok	0.74						
467	ok	0.51						
514	ok	0.31						
561	ok	0.65						
638	ok	1.48						
661	ok	1.07						
684	ok	0.83						
707	ok	0.52						
730	ok	0.39						
774	ok	0.54						
803	ok	1.49						
826	ok	0.99						
849	ok	0.83						
872	ok	0.49						
895	ok	0.35						
939	ok	0.37						
989	ok	1.41						
1034	ok	1.06						
1079	ok	0.74						
1124	ok	0.51						
1169	ok	0.28						
1214	ok	0.42						

1243	ok	1.52
1266	ok	1.07
1289	ok	0.84
1312	ok	0.53
1335	ok	0.33
1379	ok	0.32
1408	ok	1.52
1431	ok	1.05
1454	ok	0.84
1477	ok	0.51
1500	ok	0.35
1544	ok	0.33
1594	ok	1.40
1639	ok	1.05
1684	ok	0.74
1729	ok	0.50
1774	ok	0.29
1819	ok	0.37
1848	ok	1.51
1871	ok	1.06
1894	ok	0.83
1917	ok	0.52
1940	ok	0.31
1984	ok	0.33
2013	ok	1.50
2036	ok	1.05
2059	ok	0.83
2082	ok	0.50
2105	ok	0.33
2149	ok	0.32
2199	ok	1.73
2244	ok	1.06
2289	ok	0.73
2334	ok	0.48
2379	ok	0.28
2424	ok	0.34
2458	ok	1.89
2481	ok	1.06
2504	ok	0.74
2527	ok	0.41
2550	ok	0.24
2594	ok	0.34
2776	ok	2.05
2799	ok	1.07
2822	ok	0.79
2845	ok	0.40
2868	ok	0.25
2912	ok	0.38
3099	ok	2.08
3146	ok	1.08
3193	ok	0.71
3240	ok	0.40
3287	ok	0.24
3334	ok	0.38

Nodo	Max tau	Ver V pr	Ver V sec	Af V pr	Af V sec	V pr	V sec
	2.08						

Macro Setto	Spessore	Id Materiale	Id Criterio	Progettazione
	cm			
25	15.00	1	1	Singolo elemento NON DISSIPATIVO

Nodo	Stato	x/d	V N/M	ver. rid	Af pr-	Af pr+	Af sec-	Af sec+	N z	N o	N zo	M z	M o	M zo
									kN/ m	kN/ m	kN/ m	kN	kN	kN
519	ok	0.24	0.1	5.93e-02	5.7	5.7	2.5	2.5	-129.3	-24.0	-26.4	-1.6	-0.2	9.94e-02
520	ok	0.24	8.42e-02	2.96e-02	5.7	5.7	2.5	2.5	-47.4	-9.6	-31.3	-1.1	-0.3	0.1
521	ok	0.24	7.41e-02	2.33e-02	5.7	5.7	2.5	2.5	-43.2	-7.1	-26.6	-1.0	-9.96e-02	0.2
522	ok	0.24	8.85e-02	2.49e-02	5.7	5.7	2.5	2.5	-41.4	-7.7	-12.7	-0.8	-0.2	0.2
523	ok	0.24	8.07e-02	2.31e-02	5.7	5.7	2.5	2.5	-41.9	-6.3	-16.0	-0.9	-0.1	0.1
524	ok	0.24	0.1	2.51e-02	5.7	5.7	2.5	2.5	-42.7	-9.2	-13.5	-0.8	-0.2	0.3
525	ok	0.24	9.36e-02	2.33e-02	5.7	5.7	2.5	2.5	-41.9	-7.1	-17.0	-0.9	-0.1	0.2
526	ok	0.24	0.1	2.53e-02	5.7	5.7	2.5	2.5	-42.4	-9.5	-14.1	-0.8	-0.2	0.3
527	ok	0.24	0.1	2.34e-02	5.7	5.7	2.5	2.5	-41.5	-7.2	-17.8	-0.9	-0.1	0.2

528	ok	0.24	0.1	2.55e-02	5.7	5.7	2.5	2.5	-42.0	-9.6	-32.8	-0.7	-0.3	0.2
529	ok	0.24	0.1	2.35e-02	5.7	5.7	2.5	2.5	-40.8	-6.9	-18.7	-0.9	-0.1	0.2
530	ok	0.24	0.1	2.55e-02	5.7	5.7	2.5	2.5	-41.2	-8.8	-33.5	-0.7	-0.3	0.2
531	ok	0.24	0.1	2.34e-02	5.7	5.7	2.5	2.5	-40.0	-6.2	-19.8	-0.9	-0.1	0.2
532	ok	0.24	0.1	2.52e-02	5.7	5.7	2.5	2.5	-40.2	-7.7	-34.1	-0.7	-0.3	0.2
533	ok	0.24	0.1	2.31e-02	5.7	5.7	2.5	2.5	-39.4	-5.3	-20.2	-0.9	-0.1	0.2
534	ok	0.24	0.1	2.49e-02	5.7	5.7	2.5	2.5	-39.4	-6.7	-34.2	-0.7	-0.3	0.2
535	ok	0.24	0.1	2.28e-02	5.7	5.7	2.5	2.5	-38.8	-4.4	-20.5	-0.9	-0.1	0.2
536	ok	0.24	0.1	2.46e-02	5.7	5.7	2.5	2.5	-38.7	-5.5	-34.2	-0.7	-0.3	0.2
537	ok	0.24	0.1	2.24e-02	5.7	5.7	2.5	2.5	-38.1	-3.4	-20.6	-0.9	-0.1	0.2
538	ok	0.24	0.1	2.42e-02	5.7	5.7	2.5	2.5	-38.2	-4.4	-34.1	-0.7	-0.3	0.2
539	ok	0.24	0.1	2.20e-02	5.7	5.7	2.5	2.5	-37.5	-2.4	-20.4	-0.9	-0.1	0.2
540	ok	0.24	0.1	2.40e-02	5.7	5.7	2.5	2.5	-37.9	-3.3	-34.1	-0.7	-0.3	0.2
541	ok	0.24	0.1	2.20e-02	5.7	5.7	2.5	2.5	-36.8	-1.4	20.3	-0.9	-0.1	-0.2
542	ok	0.24	0.1	2.40e-02	5.7	5.7	2.5	2.5	-37.8	-3.4	34.0	-0.7	-0.3	-0.2
543	ok	0.24	0.1	2.20e-02	5.7	5.7	2.5	2.5	-37.5	-2.3	20.4	-0.9	-0.1	-0.2
544	ok	0.24	0.1	2.42e-02	5.7	5.7	2.5	2.5	-38.1	-4.4	34.1	-0.7	-0.3	-0.2
545	ok	0.24	0.1	2.24e-02	5.7	5.7	2.5	2.5	-38.1	-3.3	20.5	-0.9	-0.1	-0.2
546	ok	0.24	0.1	2.45e-02	5.7	5.7	2.5	2.5	-38.7	-5.5	34.2	-0.7	-0.3	-0.2
547	ok	0.24	0.1	2.28e-02	5.7	5.7	2.5	2.5	-38.8	-4.4	20.5	-0.9	-0.1	-0.2
548	ok	0.24	0.1	2.49e-02	5.7	5.7	2.5	2.5	-39.4	-6.7	34.2	-0.7	-0.3	-0.2
549	ok	0.24	0.1	2.31e-02	5.7	5.7	2.5	2.5	-39.4	-5.4	20.2	-0.9	-0.1	-0.2
550	ok	0.24	0.1	2.52e-02	5.7	5.7	2.5	2.5	-40.1	-7.8	34.1	-0.7	-0.3	-0.2
551	ok	0.24	0.1	2.34e-02	5.7	5.7	2.5	2.5	-40.1	-6.5	19.4	-0.9	-0.1	-0.2
552	ok	0.24	0.1	2.55e-02	5.7	5.7	2.5	2.5	-41.3	-9.0	33.4	-0.7	-0.3	-0.2
553	ok	0.24	0.1	2.35e-02	5.7	5.7	2.5	2.5	-40.9	-7.0	18.5	-0.9	-0.1	-0.2
554	ok	0.24	0.1	2.54e-02	5.7	5.7	2.5	2.5	-42.0	-9.8	32.7	-0.7	-0.3	-0.2
555	ok	0.24	0.1	2.34e-02	5.7	5.7	2.5	2.5	-41.5	-7.3	17.6	-0.9	-0.1	-0.2
556	ok	0.24	0.1	2.52e-02	5.7	5.7	2.5	2.5	-42.4	-9.6	14.0	-0.8	-0.2	-0.3
557	ok	0.24	9.36e-02	2.33e-02	5.7	5.7	2.5	2.5	-41.9	-7.2	16.9	-0.9	-0.1	-0.2
558	ok	0.24	0.1	2.51e-02	5.7	5.7	2.5	2.5	-42.8	-9.4	13.3	-0.8	-0.2	-0.3
559	ok	0.24	8.11e-02	2.31e-02	5.7	5.7	2.5	2.5	-42.0	-6.5	15.9	-0.9	-0.1	-0.1
560	ok	0.24	8.79e-02	2.49e-02	5.7	5.7	2.5	2.5	-41.5	-7.8	12.6	-0.8	-0.2	-0.2
561	ok	0.24	7.42e-02	2.33e-02	5.7	5.7	2.5	2.5	-43.3	-7.1	26.5	-1.1	-9.97e-02	-0.2
562	ok	0.24	8.37e-02	2.95e-02	5.7	5.7	2.5	2.5	-47.5	-9.6	31.2	-1.1	-0.3	-0.1
563	ok	0.24	0.1	5.95e-02	5.7	5.7	2.5	2.5	-129.7	-24.0	26.5	-1.6	-0.2	-0.1
732	ok	0.24	8.44e-02	4.03e-02	5.7	5.7	2.5	2.5	-100.7	-11.4	-6.2	-0.2	0.2	0.1
733	ok	0.24	6.61e-02	3.21e-02	5.7	5.7	2.5	2.5	-46.0	-13.6	-20.7	-0.6	-0.4	0.2
734	ok	0.24	8.04e-02	2.57e-02	5.7	5.7	2.5	2.5	-37.4	-10.3	-20.0	4.95e-02	0.3	0.2
735	ok	0.24	6.96e-02	2.20e-02	5.7	5.7	2.5	2.5	-39.4	-8.2	-18.4	-0.3	-0.3	0.2
736	ok	0.24	7.64e-02	2.34e-02	5.7	5.7	2.5	2.5	-38.6	-9.3	-14.6	5.81e-02	0.3	0.2
737	ok	0.24	7.40e-02	2.21e-02	5.7	5.7	2.5	2.5	-39.6	-7.1	-18.7	-0.3	-0.3	0.2
738	ok	0.24	7.53e-02	2.34e-02	5.7	5.7	2.5	2.5	-38.2	-9.1	-15.1	0.2	0.3	0.2
739	ok	0.24	8.33e-02	2.22e-02	5.7	5.7	2.5	2.5	-39.0	-6.9	-19.3	-0.3	-0.3	0.2
740	ok	0.24	8.18e-02	2.36e-02	5.7	5.7	2.5	2.5	-37.7	-9.0	-15.7	0.2	0.3	0.2
741	ok	0.24	9.09e-02	2.23e-02	5.7	5.7	2.5	2.5	-38.6	-6.5	-20.1	-0.3	-0.3	0.2
742	ok	0.24	8.77e-02	2.37e-02	5.7	5.7	2.5	2.5	-34.7	-7.8	-21.3	4.01e-02	0.3	0.2
743	ok	0.24	9.59e-02	2.24e-02	5.7	5.7	2.5	2.5	-37.8	-5.8	-21.1	-0.3	-0.3	0.2
744	ok	0.24	9.31e-02	2.37e-02	5.7	5.7	2.5	2.5	-34.0	-7.2	-21.8	3.80e-02	0.3	0.2
745	ok	0.24	0.1	2.23e-02	5.7	5.7	2.5	2.5	-36.8	-5.2	-21.4	-0.2	-0.3	0.2
746	ok	0.24	9.77e-02	2.36e-02	5.7	5.7	2.5	2.5	-33.2	-6.4	-22.1	3.45e-02	0.3	0.2
747	ok	0.24	0.1	2.20e-02	5.7	5.7	2.5	2.5	-36.1	-4.6	-21.5	-0.2	-0.3	0.2
748	ok	0.24	0.1	2.34e-02	5.7	5.7	2.5	2.5	-32.7	-5.7	-22.1	3.37e-02	0.3	0.2
749	ok	0.24	0.1	2.18e-02	5.7	5.7	2.5	2.5	-33.8	-3.9	-26.3	-0.1	-0.3	0.2
750	ok	0.24	0.1	2.31e-02	5.7	5.7	2.5	2.5	-32.2	-5.1	-22.0	3.31e-02	0.3	0.2
751	ok	0.24	0.1	2.15e-02	5.7	5.7	2.5	2.5	-33.4	-0.4	-26.2	-0.1	-0.3	0.2
752	ok	0.24	0.1	2.24e-02	5.7	5.7	2.5	2.5	-31.8	-4.5	-21.8	3.14e-02	0.3	0.2
753	ok	0.24	0.1	2.13e-02	5.7	5.7	2.5	2.5	-32.4	-0.4	-26.0	-0.1	-0.3	0.2
754	ok	0.24	0.1	2.21e-02	5.7	5.7	2.5	2.5	-32.7	-1.5	33.5	0.1	0.1	-0.2
755	ok	0.24	0.1	2.13e-02	5.7	5.7	2.5	2.5	-33.9	-0.5	21.2	-0.2	-0.3	-0.2
756	ok	0.24	0.1	2.24e-02	5.7	5.7	2.5	2.5	-33.6	-5.2	16.5	0.2	0.3	-0.2
757	ok	0.24	0.1	2.15e-02	5.7	5.7	2.5	2.5	-34.9	-0.4	21.3	-0.2	-0.3	-0.2
758	ok	0.24	0.1	2.31e-02	5.7	5.7	2.5	2.5	-34.2	-5.8	16.7	0.2	0.3	-0.2
759	ok	0.24	0.1	2.18e-02	5.7	5.7	2.5	2.5	-35.4	-4.0	21.5	-0.2	-0.3	-0.2
760	ok	0.24	0.1	2.34e-02	5.7	5.7	2.5	2.5	-34.8	-6.5	16.8	0.2	0.3	-0.2
761	ok	0.24	0.1	2.20e-02	5.7	5.7	2.5	2.5	-36.1	-4.6	21.5	-0.2	-0.3	-0.2
762	ok	0.24	9.70e-02	2.36e-02	5.7	5.7	2.5	2.5	-35.4	-7.3	16.9	0.2	0.3	-0.2
763	ok	0.24	9.97e-02	2.23e-02	5.7	5.7	2.5	2.5	-36.8	-5.4	21.4	-0.2	-0.3	-0.2
764	ok	0.24	9.22e-02	2.37e-02	5.7	5.7	2.5	2.5	-36.3	-8.0	16.9	0.2	0.3	-0.2
765	ok	0.24	9.53e-02	2.24e-02	5.7	5.7	2.5	2.5	-37.8	-6.0	21.0	-0.3	-0.3	-0.2
766	ok	0.24	8.69e-02	2.37e-02	5.7	5.7	2.5	2.5	-37.2	-8.8	16.3	0.2	0.3	-0.2
767	ok	0.24	9.04e-02	2.23e-02	5.7	5.7	2.5	2.5	-38.6	-6.7	20.0	-0.3	-0.3	-0.2
768	ok	0.24	8.13e-02	2.35e-02	5.7	5.7	2.5	2.5	-37.7	-9.2	15.6	0.2	0.3	-0.2
769	ok	0.24	8.31e-02	2.22e-02	5.7	5.7	2.5	2.5	-39.1	-7.1	19.2	-0.3	-0.3	-0.2
770	ok	0.24	7.39e-02	2.34e-02	5.7	5.7	2.5	2.5	-38.3	-9.3	14.9	0.2	0.3	-0.2
771	ok	0.24	7.37e-02	2.21e-02	5.7	5.7	2.5	2.5	-39.6	-7.3	18.5	-0.3	-0.3	-0.2
772	ok	0.24	7.50e-02	2.33e-02	5.7	5.7	2.5	2.5	-38.7	-9.4	14.5	5.86e-02	0.3	-0.2
773	ok	0.24	6.91e-02	2.20e-02	5.7	5.7	2.5	2.5	-39.5	-8.3	18.3	-0.3	-0.3	-0.2

774	ok	0.24	7.87e-02	2.57e-02	5.7	5.7	2.5	2.5	-37.5	-10.4	19.9	4.93e-02	0.3	-0.2
775	ok	0.24	6.60e-02	3.21e-02	5.7	5.7	2.5	2.5	-46.1	-13.7	20.6	-0.6	-0.4	-0.2
776	ok	0.24	8.40e-02	4.04e-02	5.7	5.7	2.5	2.5	-101.0	-11.5	6.2	-0.2	0.2	-0.1
897	ok	0.24	6.09e-02	2.85e-02	5.7	5.7	2.5	2.5	-71.3	-3.6	-4.6	0.2	0.1	0.1
898	ok	0.24	7.30e-02	2.56e-02	5.7	5.7	2.5	2.5	-48.7	-7.8	-23.2	0.1	-3.57e-02	0.2
899	ok	0.24	5.06e-02	2.18e-02	5.7	5.7	2.5	2.5	-35.1	-9.4	-26.9	0.1	0.1	0.3
900	ok	0.24	5.71e-02	2.04e-02	5.7	5.7	2.5	2.5	-35.3	-7.6	-22.8	0.1	-8.11e-03	0.2
901	ok	0.24	6.18e-02	2.04e-02	5.7	5.7	2.5	2.5	-32.4	-7.8	-27.1	0.1	0.1	0.3
902	ok	0.24	6.30e-02	2.00e-02	5.7	5.7	2.5	2.5	-34.6	-6.4	-22.6	0.1	-9.51e-03	0.2
903	ok	0.24	6.67e-02	2.03e-02	5.7	5.7	2.5	2.5	-31.9	-7.1	-27.5	0.1	9.31e-02	0.3
904	ok	0.24	6.62e-02	2.00e-02	5.7	5.7	2.5	2.5	-34.1	-6.3	-23.2	0.1	-9.82e-03	0.2
905	ok	0.24	7.38e-02	2.05e-02	5.7	5.7	2.5	2.5	-31.6	-7.1	-28.3	0.1	8.88e-02	0.3
906	ok	0.24	7.15e-02	2.02e-02	5.7	5.7	2.5	2.5	-33.8	-6.2	-23.9	0.1	-1.41e-02	0.2
907	ok	0.24	7.89e-02	2.07e-02	5.7	5.7	2.5	2.5	-31.1	-7.0	-29.2	0.1	8.98e-02	0.3
908	ok	0.24	7.60e-02	2.03e-02	5.7	5.7	2.5	2.5	-33.2	-5.9	-24.8	0.1	-1.46e-02	0.2
909	ok	0.24	8.37e-02	2.09e-02	5.7	5.7	2.5	2.5	-30.4	-6.7	-30.1	0.1	9.31e-02	0.3
910	ok	0.24	8.08e-02	2.02e-02	5.7	5.7	2.5	2.5	-32.3	-5.3	-25.5	0.1	-1.14e-02	0.2
911	ok	0.24	8.84e-02	2.08e-02	5.7	5.7	2.5	2.5	-29.6	-6.1	-30.7	0.1	9.42e-02	0.3
912	ok	0.24	8.50e-02	2.00e-02	5.7	5.7	2.5	2.5	-31.6	-4.8	-25.6	0.1	-1.05e-02	0.2
913	ok	0.24	9.19e-02	2.06e-02	5.7	5.7	2.5	2.5	-29.0	-5.7	-30.9	0.1	9.41e-02	0.3
914	ok	0.24	8.80e-02	1.98e-02	5.7	5.7	2.5	2.5	-31.1	-4.3	-25.6	0.1	-9.87e-03	0.2
915	ok	0.24	8.71e-02	2.05e-02	5.7	5.7	2.5	2.5	-28.6	-5.4	-30.9	0.1	9.02e-02	0.3
916	ok	0.24	9.01e-02	1.93e-02	5.7	5.7	2.5	2.5	-30.7	-4.1	-25.4	0.1	-1.07e-02	0.2
917	ok	0.24	8.87e-02	2.03e-02	5.7	5.7	2.5	2.5	-27.2	-4.7	30.4	9.90e-02	9.32e-02	-0.3
918	ok	0.24	8.99e-02	1.90e-02	5.7	5.7	2.5	2.5	-30.6	-3.9	-25.2	0.1	-1.51e-02	0.2
919	ok	0.24	8.81e-02	2.02e-02	5.7	5.7	2.5	2.5	-28.2	-4.9	30.6	9.71e-02	8.92e-02	-0.3
920	ok	0.24	9.00e-02	1.90e-02	5.7	5.7	2.5	2.5	-30.5	-3.9	25.2	0.1	-1.53e-02	-0.2
921	ok	0.24	8.87e-02	2.03e-02	5.7	5.7	2.5	2.5	-28.4	-5.2	30.7	9.83e-02	8.77e-02	-0.3
922	ok	0.24	9.03e-02	1.93e-02	5.7	5.7	2.5	2.5	-30.7	-4.2	25.4	0.1	-1.09e-02	-0.2
923	ok	0.24	8.72e-02	2.05e-02	5.7	5.7	2.5	2.5	-28.6	-5.5	30.9	0.1	9.01e-02	-0.3
924	ok	0.24	8.77e-02	1.98e-02	5.7	5.7	2.5	2.5	-31.1	-4.5	25.6	0.1	-1.00e-02	-0.2
925	ok	0.24	9.16e-02	2.06e-02	5.7	5.7	2.5	2.5	-28.9	-5.8	30.9	0.1	9.38e-02	-0.3
926	ok	0.24	8.45e-02	2.00e-02	5.7	5.7	2.5	2.5	-31.6	-4.9	25.6	0.1	-1.07e-02	-0.2
927	ok	0.24	8.79e-02	2.08e-02	5.7	5.7	2.5	2.5	-29.5	-6.3	30.7	0.1	9.36e-02	-0.3
928	ok	0.24	8.01e-02	2.02e-02	5.7	5.7	2.5	2.5	-32.2	-5.4	25.5	0.1	-1.16e-02	-0.2
929	ok	0.24	8.31e-02	2.09e-02	5.7	5.7	2.5	2.5	-30.4	-6.8	30.0	0.1	9.26e-02	-0.3
930	ok	0.24	7.54e-02	2.03e-02	5.7	5.7	2.5	2.5	-33.2	-6.0	24.7	0.1	-1.47e-02	-0.2
931	ok	0.24	7.84e-02	2.07e-02	5.7	5.7	2.5	2.5	-31.1	-7.2	29.1	0.1	8.93e-02	-0.3
932	ok	0.24	7.11e-02	2.02e-02	5.7	5.7	2.5	2.5	-33.8	-6.3	23.8	0.1	-1.43e-02	-0.2
933	ok	0.24	7.35e-02	2.05e-02	5.7	5.7	2.5	2.5	-31.6	-7.3	28.1	0.1	8.84e-02	-0.3
934	ok	0.24	6.56e-02	2.00e-02	5.7	5.7	2.5	2.5	-34.2	-6.4	23.0	0.1	-9.99e-03	-0.2
935	ok	0.24	6.65e-02	2.03e-02	5.7	5.7	2.5	2.5	-32.0	-7.2	27.4	0.1	9.28e-02	-0.3
936	ok	0.24	6.23e-02	1.99e-02	5.7	5.7	2.5	2.5	-34.6	-6.5	22.4	0.1	-9.74e-03	-0.2
937	ok	0.24	6.13e-02	2.03e-02	5.7	5.7	2.5	2.5	-32.4	-7.8	27.0	0.1	0.1	-0.3
938	ok	0.24	5.66e-02	2.04e-02	5.7	5.7	2.5	2.5	-35.3	-7.7	22.6	0.1	-8.42e-03	-0.2
939	ok	0.24	4.92e-02	2.18e-02	5.7	5.7	2.5	2.5	-33.3	-9.2	25.9	8.59e-02	0.1	-0.3
940	ok	0.24	7.22e-02	2.56e-02	5.7	5.7	2.5	2.5	-48.8	-7.8	23.1	0.1	-3.61e-02	-0.2
941	ok	0.24	6.01e-02	2.86e-02	5.7	5.7	2.5	2.5	-71.5	-3.6	4.5	0.2	0.1	-0.1
1172	ok	0.24	6.28e-02	2.33e-02	5.7	5.7	2.5	2.5	-58.3	-5.8	4.3	-5.93e-02	-2.98e-03	0.2
1173	ok	0.24	8.55e-02	2.18e-02	5.7	5.7	2.5	2.5	-35.7	-3.4	-17.6	-0.1	-7.41e-02	-0.1
1174	ok	0.24	8.43e-02	2.03e-02	5.7	5.7	2.5	2.5	-33.1	-3.9	-21.9	-0.2	-1.82e-03	-0.2
1175	ok	0.24	8.57e-02	1.92e-02	5.7	5.7	2.5	2.5	-32.4	-6.1	-22.1	0.2	3.59e-02	0.2
1176	ok	0.24	6.37e-02	1.84e-02	5.7	5.7	2.5	2.5	-28.4	-5.2	-19.7	3.30e-02	3.44e-03	0.2
1177	ok	0.24	7.58e-02	1.84e-02	5.7	5.7	2.5	2.5	-30.7	-5.3	-21.5	0.2	4.00e-02	0.2
1178	ok	0.24	6.71e-02	1.81e-02	5.7	5.7	2.5	2.5	-27.7	-5.0	-19.9	3.70e-02	5.15e-03	0.2
1179	ok	0.24	7.70e-02	1.84e-02	5.7	5.7	2.5	2.5	-30.2	-5.2	-21.8	0.2	4.11e-02	0.2
1180	ok	0.24	6.84e-02	1.83e-02	5.7	5.7	2.5	2.5	-27.6	-5.6	-25.8	8.68e-02	4.58e-02	0.2
1181	ok	0.24	7.81e-02	1.86e-02	5.7	5.7	2.5	2.5	-29.9	-5.2	-22.5	0.2	4.03e-02	0.2
1182	ok	0.24	7.05e-02	1.85e-02	5.7	5.7	2.5	2.5	-27.2	-5.5	-26.8	8.65e-02	4.53e-02	0.2
1183	ok	0.24	8.06e-02	1.88e-02	5.7	5.7	2.5	2.5	-29.4	-5.0	-23.4	0.2	3.78e-02	0.2
1184	ok	0.24	7.48e-02	1.86e-02	5.7	5.7	2.5	2.5	-26.6	-5.2	-27.6	8.67e-02	5.00e-02	0.2
1185	ok	0.24	8.28e-02	1.87e-02	5.7	5.7	2.5	2.5	-28.6	-4.6	-23.8	0.1	3.67e-02	0.2
1186	ok	0.24	7.83e-02	1.85e-02	5.7	5.7	2.5	2.5	-25.9	-4.8	-27.9	8.37e-02	5.30e-02	0.2
1187	ok	0.24	8.50e-02	1.85e-02	5.7	5.7	2.5	2.5	-28.0	-4.1	-24.0	0.1	3.67e-02	0.2
1188	ok	0.24	8.10e-02	1.84e-02	5.7	5.7	2.5	2.5	-25.4	-4.3	-28.1	8.10e-02	4.87e-02	0.2
1189	ok	0.24	8.66e-02	1.83e-02	5.7	5.7	2.5	2.5	-27.5	-3.9	-23.8	0.1	3.79e-02	0.2
1190	ok	0.24	8.28e-02	1.83e-02	5.7	5.7	2.5	2.5	-23.7	-3.3	27.2	7.70e-02	5.08e-02	-0.2
1191	ok	0.24	8.63e-02	1.81e-02	5.7	5.7	2.5	2.5	-22.3	-3.1	-24.2	-0.1	-6.84e-02	0.2
1192	ok	0.24	8.30e-02	1.83e-02	5.7	5.7	2.5	2.5	-24.3	-3.8	27.9	7.41e-02	4.57e-02	-0.2
1193	ok	0.24	8.51e-02	1.81e-02	5.7	5.7	2.5	2.5	-27.1	-3.9	-26.3	0.1	-7.91e-03	0.2
1194	ok	0.24	8.20e-02	1.82e-02	5.7	5.7	2.5	2.5	-24.8	-4.3	28.1	7.10e-02	3.95e-02	-0.2
1195	ok	0.24	8.50e-02	1.81e-02	5.7	5.7	2.5	2.5	-27.1	-4.0	23.4	0.1	3.53e-02	-0.2
1196	ok	0.24	8.33e-02	1.83e-02	5.7	5.7	2.5	2.5	-25.0	-4.4	28.1	7.23e-02	3.87e-02	-0.2
1197	ok	0.24	8.62e-02	1.82e-02	5.7	5.7	2.5	2.5	-27.2	-4.0	23.6	0.1	3.71e-02	-0.2
1198	ok	0.24	8.28e-02	1.83e-02	5.7	5.7	2.5	2.5	-25.1	-4.4	28.1	7.86e-02	4.31e-02	-0.2
1199	ok	0.24	8.64e-02	1.83e-02	5.7	5.7	2.5	2.5	-27.5	-4.1	23.8	0.1	3.83e-02	-0.2
1200	ok	0.24	8.08e-02	1.84e-02	5.7	5.7	2.5	2.5	-25.4	-4.5	28.2	8.32e-02	4.86e-02	-0.2
1201	ok	0.24	8.48e-02	1.85e-02	5.7	5.7	2.5	2.5	-27.9	-4.3	24.0	0.1	3.71e-02	-0.2

1202	ok	0.24	7.79e-02	1.85e-02	5.7	5.7	2.5	2.5	-25.8	-5.0	27.9	8.57e-02	5.28e-02	-0.2
1203	ok	0.24	8.26e-02	1.87e-02	5.7	5.7	2.5	2.5	-28.6	-4.8	23.8	0.1	3.73e-02	-0.2
1204	ok	0.24	7.42e-02	1.86e-02	5.7	5.7	2.5	2.5	-26.5	-5.4	27.5	8.82e-02	4.97e-02	-0.2
1205	ok	0.24	8.01e-02	1.88e-02	5.7	5.7	2.5	2.5	-29.4	-5.2	23.3	0.2	3.84e-02	-0.2
1206	ok	0.24	7.00e-02	1.85e-02	5.7	5.7	2.5	2.5	-27.2	-5.7	26.6	8.74e-02	4.51e-02	-0.2
1207	ok	0.24	7.76e-02	1.86e-02	5.7	5.7	2.5	2.5	-29.9	-5.4	22.4	0.2	4.09e-02	-0.2
1208	ok	0.24	6.78e-02	1.82e-02	5.7	5.7	2.5	2.5	-27.6	-5.7	25.6	8.72e-02	4.57e-02	-0.2
1209	ok	0.24	7.65e-02	1.84e-02	5.7	5.7	2.5	2.5	-30.2	-5.3	21.7	0.2	4.15e-02	-0.2
1210	ok	0.24	6.66e-02	1.81e-02	5.7	5.7	2.5	2.5	-27.7	-5.1	19.8	3.68e-02	4.92e-03	-0.2
1211	ok	0.24	7.54e-02	1.84e-02	5.7	5.7	2.5	2.5	-30.4	-5.5	24.1	7.30e-02	-2.19e-02	-0.2
1212	ok	0.24	6.33e-02	1.84e-02	5.7	5.7	2.5	2.5	-28.4	-5.3	19.6	3.28e-02	3.27e-03	-0.2
1213	ok	0.24	8.49e-02	1.92e-02	5.7	5.7	2.5	2.5	-30.5	-3.9	19.2	-0.2	-5.18e-02	0.1
1214	ok	0.24	8.34e-02	2.03e-02	5.7	5.7	2.5	2.5	-33.2	-3.9	21.8	-0.2	-1.97e-03	0.2
1215	ok	0.24	8.46e-02	2.18e-02	5.7	5.7	2.5	2.5	-35.9	-3.5	17.5	-0.1	-7.45e-02	0.1
1216	ok	0.24	6.19e-02	2.34e-02	5.7	5.7	2.5	2.5	-58.4	-5.8	-4.4	-5.79e-02	-2.57e-03	-0.2
1337	ok	0.24	5.57e-02	2.01e-02	5.7	5.7	2.5	2.5	-44.7	-2.2	-13.7	6.84e-02	7.35e-02	-0.1
1338	ok	0.24	8.28e-02	1.85e-02	5.7	5.7	2.5	2.5	-37.4	-3.1	-17.8	2.51e-02	-3.32e-02	-0.1
1339	ok	0.24	8.55e-02	1.76e-02	5.7	5.7	2.5	2.5	-32.1	-3.7	-21.1	-1.95e-02	2.31e-02	-0.1
1340	ok	0.24	8.37e-02	1.63e-02	5.7	5.7	2.5	2.5	-30.0	-4.3	-18.2	-9.14e-02	-5.36e-02	-0.1
1341	ok	0.24	8.74e-02	1.71e-02	5.7	5.7	2.5	2.5	-32.1	-5.1	-19.3	-4.60e-03	4.30e-02	2.63e-02
1342	ok	0.24	7.30e-02	1.56e-02	5.7	5.7	2.5	2.5	-31.0	-4.8	-16.1	-7.68e-02	-6.51e-02	7.43e-03
1343	ok	0.24	7.05e-02	1.64e-02	5.7	5.7	2.5	2.5	-31.8	-4.9	-17.7	-8.76e-03	3.30e-02	2.57e-02
1344	ok	0.24	7.39e-02	1.54e-02	5.7	5.7	2.5	2.5	-30.9	-4.8	-15.1	-7.79e-02	-6.53e-02	6.68e-03
1345	ok	0.24	7.24e-02	1.62e-02	5.7	5.7	2.5	2.5	-31.9	-4.9	-16.9	-1.49e-02	2.69e-02	2.34e-02
1346	ok	0.24	7.53e-02	1.55e-02	5.7	5.7	2.5	2.5	-31.0	-5.0	-14.6	-8.52e-02	-6.55e-02	4.89e-03
1347	ok	0.24	7.53e-02	1.61e-02	5.7	5.7	2.5	2.5	-21.2	-4.3	-19.7	4.39e-02	1.55e-02	0.2
1348	ok	0.24	7.79e-02	1.56e-02	5.7	5.7	2.5	2.5	-23.0	-4.2	-22.7	-1.48e-02	-6.31e-02	0.2
1349	ok	0.24	7.81e-02	1.59e-02	5.7	5.7	2.5	2.5	-20.7	-4.3	-20.0	4.39e-02	1.35e-02	0.2
1350	ok	0.24	7.98e-02	1.55e-02	5.7	5.7	2.5	2.5	-22.4	-4.1	-22.9	-1.22e-02	-6.09e-02	0.2
1351	ok	0.24	8.01e-02	1.58e-02	5.7	5.7	2.5	2.5	-20.1	-4.1	-20.1	4.06e-02	1.76e-02	0.2
1352	ok	0.24	8.10e-02	1.55e-02	5.7	5.7	2.5	2.5	-21.9	-3.9	-23.2	-1.15e-02	-5.87e-02	0.2
1353	ok	0.24	8.14e-02	1.58e-02	5.7	5.7	2.5	2.5	-19.8	-4.0	-20.3	4.12e-02	2.41e-02	0.2
1354	ok	0.24	8.11e-02	1.54e-02	5.7	5.7	2.5	2.5	-21.7	-4.0	-23.2	-1.27e-02	-5.97e-02	0.2
1355	ok	0.24	8.16e-02	1.58e-02	5.7	5.7	2.5	2.5	-19.7	-4.2	-20.3	4.51e-02	2.29e-02	0.2
1356	ok	0.24	8.01e-02	1.54e-02	5.7	5.7	2.5	2.5	-21.6	-4.2	-23.1	-1.57e-02	-6.12e-02	0.2
1357	ok	0.24	8.07e-02	1.58e-02	5.7	5.7	2.5	2.5	-19.3	-3.4	24.3	2.77e-02	5.81e-02	-0.2
1358	ok	0.24	7.90e-02	1.53e-02	5.7	5.7	2.5	2.5	-21.5	-4.4	22.4	-2.74e-02	-5.96e-02	-0.2
1359	ok	0.24	7.95e-02	1.57e-02	5.7	5.7	2.5	2.5	-19.6	-3.5	24.7	3.30e-02	4.92e-02	-0.3
1360	ok	0.24	7.91e-02	1.53e-02	5.7	5.7	2.5	2.5	-21.6	-4.5	22.8	-1.88e-02	-6.17e-02	-0.2
1361	ok	0.24	8.08e-02	1.58e-02	5.7	5.7	2.5	2.5	-19.3	-3.4	-24.3	3.84e-02	5.81e-02	0.2
1362	ok	0.24	8.05e-02	1.54e-02	5.7	5.7	2.5	2.5	-21.5	-4.3	23.1	-1.56e-02	-6.13e-02	-0.2
1363	ok	0.24	8.18e-02	1.58e-02	5.7	5.7	2.5	2.5	-18.8	-3.2	-23.4	3.13e-02	6.72e-02	0.2
1364	ok	0.24	8.12e-02	1.54e-02	5.7	5.7	2.5	2.5	-21.6	-4.1	23.2	-1.28e-02	-5.98e-02	-0.2
1365	ok	0.24	8.15e-02	1.58e-02	5.7	5.7	2.5	2.5	-21.5	-4.5	20.6	4.30e-02	3.16e-02	-0.2
1366	ok	0.24	8.09e-02	1.55e-02	5.7	5.7	2.5	2.5	-21.8	-4.0	23.2	-1.14e-02	-5.88e-02	-0.2
1367	ok	0.24	8.02e-02	1.58e-02	5.7	5.7	2.5	2.5	-21.8	-4.6	20.5	4.20e-02	2.71e-02	-0.2
1368	ok	0.24	7.96e-02	1.56e-02	5.7	5.7	2.5	2.5	-22.3	-4.3	22.9	-1.19e-02	-6.09e-02	-0.2
1369	ok	0.24	7.81e-02	1.59e-02	5.7	5.7	2.5	2.5	-22.5	-4.8	20.3	3.77e-02	2.12e-02	-0.2
1370	ok	0.24	7.76e-02	1.56e-02	5.7	5.7	2.5	2.5	-21.5	-4.1	22.8	2.87e-02	-5.33e-02	-0.2
1371	ok	0.24	7.53e-02	1.61e-02	5.7	5.7	2.5	2.5	-32.0	-5.2	16.3	-1.99e-02	2.51e-02	-2.23e-02
1372	ok	0.24	7.49e-02	1.55e-02	5.7	5.7	2.5	2.5	-31.0	-5.0	14.5	-8.51e-02	-6.55e-02	-7.71e-03
1373	ok	0.24	7.19e-02	1.62e-02	5.7	5.7	2.5	2.5	-32.0	-5.0	16.8	-1.53e-02	2.58e-02	-2.63e-02
1374	ok	0.24	7.35e-02	1.54e-02	5.7	5.7	2.5	2.5	-31.0	-4.9	15.1	-7.79e-02	-6.55e-02	-9.50e-03
1375	ok	0.24	7.00e-02	1.64e-02	5.7	5.7	2.5	2.5	-31.9	-4.9	17.6	-8.94e-03	3.24e-02	-2.85e-02
1376	ok	0.24	7.27e-02	1.56e-02	5.7	5.7	2.5	2.5	-31.0	-4.9	16.0	-7.69e-02	-6.54e-02	-1.02e-02
1377	ok	0.24	8.66e-02	1.71e-02	5.7	5.7	2.5	2.5	-32.1	-5.1	19.2	-4.79e-03	4.27e-02	-2.90e-02
1378	ok	0.24	8.30e-02	1.62e-02	5.7	5.7	2.5	2.5	-30.1	-4.3	18.1	-9.15e-02	-5.39e-02	0.1
1379	ok	0.24	8.46e-02	1.76e-02	5.7	5.7	2.5	2.5	-32.2	-3.7	21.0	-1.96e-02	2.29e-02	0.1
1380	ok	0.24	8.20e-02	1.84e-02	5.7	5.7	2.5	2.5	-37.5	-3.1	17.6	2.45e-02	-3.33e-02	0.1
1381	ok	0.24	5.68e-02	2.02e-02	5.7	5.7	2.5	2.5	-44.8	-2.2	13.6	6.77e-02	7.40e-02	0.1
1502	ok	0.24	5.93e-02	1.68e-02	5.7	5.7	2.5	2.5	-37.6	-1.2	-13.1	2.75e-02	3.45e-02	-0.1
1503	ok	0.24	7.18e-02	1.76e-02	5.7	5.7	2.5	2.5	-36.1	-3.2	-16.9	4.98e-02	-3.00e-02	-0.1
1504	ok	0.24	8.12e-02	1.65e-02	5.7	5.7	2.5	2.5	-29.1	-4.1	-20.4	3.63e-02	3.12e-02	-0.1
1505	ok	0.24	8.28e-02	1.57e-02	5.7	5.7	2.5	2.5	-26.6	-4.0	-17.4	7.03e-02	2.21e-02	-0.1
1506	ok	0.24	8.16e-02	1.61e-02	5.7	5.7	2.5	2.5	-24.8	-5.1	-19.0	6.53e-02	3.27e-02	-0.1
1507	ok	0.24	7.64e-02	1.49e-02	5.7	5.7	2.5	2.5	-28.8	-4.4	-16.1	5.84e-02	-8.56e-03	1.96e-03
1508	ok	0.24	6.80e-02	1.54e-02	5.7	5.7	2.5	2.5	-28.3	-5.7	-17.6	4.47e-02	4.06e-02	1.63e-02
1509	ok	0.24	7.70e-02	1.46e-02	5.7	5.7	2.5	2.5	-28.7	-4.7	-15.1	5.81e-02	-9.61e-03	5.32e-04
1510	ok	0.24	6.98e-02	1.52e-02	5.7	5.7	2.5	2.5	-28.3	-6.1	-16.8	4.14e-02	3.10e-02	1.37e-02
1511	ok	0.24	7.86e-02	1.48e-02	5.7	5.7	2.5	2.5	-28.8	-5.6	-13.8	6.61e-02	9.48e-03	6.98e-03
1512	ok	0.24	7.30e-02	1.53e-02	5.7	5.7	2.5	2.5	-28.3	-6.4	-16.4	5.65e-02	2.93e-02	1.22e-02
1513	ok	0.24	8.17e-02	1.49e-02	5.7	5.7	2.5	2.5	-28.7	-5.8	-13.2	6.61e-02	2.70e-03	5.95e-03
1514	ok	0.24	7.55e-02	1.54e-02	5.7	5.7	2.5	2.5	-28.1	-6.5	-15.8	6.03e-02	3.38e-02	1.04e-02
1515	ok	0.24	8.38e-02	1.49e-02	5.7	5.7	2.5	2.5	-18.9	-4.5	-21.2	6.18e-02	4.04e-02	0.2
1516	ok	0.24	7.62e-02	1.54e-02	5.7	5.7	2.5	2.5	-17.3	-5.4	-23.3	6.91e-02	7.75e-02	0.2
1517	ok	0.24	8.46e-02	1.48e-02	5.7	5.7	2.5	2.5	-18.5	-4.4	-21.3	6.16e-02	4.21e-02	0.2
1518	ok	0.24	7.53e-02	1.54e-02	5.7	5.7	2.5	2.5	-17.1	-5.3	-23.3	6.96e-02	7.55e-02	0.2
1519	ok	0.24	8.40e-02	1.48e-02	5.7	5.7	2.5	2.5	-18.4	-4.5	-21.2	6.13e-02	4.26e-02	0.2

1520	ok	0.24	7.36e-02	1.54e-02	5.7	5.7	2.5	2.5	-17.1	-5.4	-23.2	6.58e-02	6.91e-02	0.2
1521	ok	0.24	8.22e-02	1.48e-02	5.7	5.7	2.5	2.5	-18.4	-4.7	-21.1	5.88e-02	4.23e-02	0.2
1522	ok	0.24	7.20e-02	1.55e-02	5.7	5.7	2.5	2.5	-18.8	-5.9	23.8	5.51e-02	6.20e-02	-0.2
1523	ok	0.24	8.06e-02	1.47e-02	5.7	5.7	2.5	2.5	-19.9	-5.4	-21.6	6.11e-02	3.80e-02	0.2
1524	ok	0.24	7.17e-02	1.54e-02	5.7	5.7	2.5	2.5	-18.9	-5.9	24.2	5.22e-02	5.67e-02	-0.2
1525	ok	0.24	8.08e-02	1.47e-02	5.7	5.7	2.5	2.5	-19.9	-5.3	21.6	6.11e-02	3.77e-02	-0.2
1526	ok	0.24	7.22e-02	1.55e-02	5.7	5.7	2.5	2.5	-18.9	-5.7	24.4	5.48e-02	5.81e-02	-0.2
1527	ok	0.24	8.22e-02	1.48e-02	5.7	5.7	2.5	2.5	-19.7	-5.1	21.9	6.32e-02	3.99e-02	-0.2
1528	ok	0.24	7.37e-02	1.54e-02	5.7	5.7	2.5	2.5	-17.0	-5.3	23.3	6.56e-02	6.71e-02	-0.2
1529	ok	0.24	8.39e-02	1.48e-02	5.7	5.7	2.5	2.5	-28.2	-5.8	12.1	6.69e-02	1.19e-02	-1.96e-03
1530	ok	0.24	7.53e-02	1.54e-02	5.7	5.7	2.5	2.5	-17.0	-5.3	23.3	6.97e-02	7.53e-02	-0.2
1531	ok	0.24	8.44e-02	1.48e-02	5.7	5.7	2.5	2.5	-28.2	-5.8	12.5	6.69e-02	2.77e-03	-3.49e-03
1532	ok	0.24	7.61e-02	1.54e-02	5.7	5.7	2.5	2.5	-27.8	-6.5	15.3	4.37e-02	3.71e-02	-7.75e-03
1533	ok	0.24	8.35e-02	1.49e-02	5.7	5.7	2.5	2.5	-28.4	-5.9	12.9	6.58e-02	1.12e-03	-4.86e-03
1534	ok	0.24	7.53e-02	1.54e-02	5.7	5.7	2.5	2.5	-28.1	-6.6	15.8	5.99e-02	3.34e-02	-1.32e-02
1535	ok	0.24	8.13e-02	1.49e-02	5.7	5.7	2.5	2.5	-28.7	-5.9	13.2	6.58e-02	2.71e-03	-8.54e-03
1536	ok	0.24	7.27e-02	1.53e-02	5.7	5.7	2.5	2.5	-28.3	-6.5	16.3	5.60e-02	2.90e-02	-1.51e-02
1537	ok	0.24	7.82e-02	1.47e-02	5.7	5.7	2.5	2.5	-28.8	-5.0	14.5	5.90e-02	-8.40e-03	-1.84e-03
1538	ok	0.24	6.94e-02	1.52e-02	5.7	5.7	2.5	2.5	-28.3	-6.2	16.7	4.18e-02	3.11e-02	-1.66e-02
1539	ok	0.24	7.66e-02	1.46e-02	5.7	5.7	2.5	2.5	-28.7	-4.7	15.0	5.78e-02	-9.56e-03	-3.29e-03
1540	ok	0.24	6.77e-02	1.54e-02	5.7	5.7	2.5	2.5	-28.3	-5.8	17.5	4.51e-02	4.10e-02	-1.92e-02
1541	ok	0.24	7.62e-02	1.49e-02	5.7	5.7	2.5	2.5	-28.8	-4.4	16.0	5.81e-02	-8.52e-03	-4.68e-03
1542	ok	0.24	8.08e-02	1.61e-02	5.7	5.7	2.5	2.5	-24.9	-5.1	18.9	6.52e-02	3.34e-02	0.1
1543	ok	0.24	8.19e-02	1.57e-02	5.7	5.7	2.5	2.5	-26.6	-4.0	17.3	7.02e-02	2.22e-02	0.1
1544	ok	0.24	8.04e-02	1.65e-02	5.7	5.7	2.5	2.5	-29.2	-4.4	20.2	3.66e-02	3.15e-02	0.1
1545	ok	0.24	7.11e-02	1.76e-02	5.7	5.7	2.5	2.5	-36.1	-3.2	16.8	4.98e-02	-3.00e-02	0.1
1546	ok	0.24	6.05e-02	1.68e-02	5.7	5.7	2.5	2.5	-37.7	-1.2	12.9	2.78e-02	3.45e-02	0.1
1777	ok	0.24	6.14e-02	1.46e-02	5.7	5.7	2.5	2.5	-28.6	-2.6	-15.5	-0.2	2.75e-02	-0.2
1778	ok	0.24	7.70e-02	1.63e-02	5.7	5.7	2.5	2.5	-25.1	-2.8	-15.1	-0.2	-6.21e-02	-0.1
1779	ok	0.24	7.47e-02	1.58e-02	5.7	5.7	2.5	2.5	-24.4	-2.5	-18.7	-0.1	1.80e-03	-0.1
1780	ok	0.24	8.41e-02	1.49e-02	5.7	5.7	2.5	2.5	-21.3	-4.0	-15.4	-0.2	-6.73e-02	-0.1
1781	ok	0.24	7.72e-02	1.47e-02	5.7	5.7	2.5	2.5	-21.3	-3.8	-18.4	-0.1	-7.23e-04	-0.2
1782	ok	0.24	7.75e-02	1.44e-02	5.7	5.7	2.5	2.5	-19.3	-4.7	-14.0	-0.2	-6.14e-02	-0.1
1783	ok	0.24	6.82e-02	1.43e-02	5.7	5.7	2.5	2.5	-20.9	-4.8	-17.1	-9.81e-02	-9.51e-03	-0.2
1784	ok	0.24	7.90e-02	1.41e-02	5.7	5.7	2.5	2.5	-20.0	-4.3	-15.2	-0.1	-5.77e-02	8.69e-03
1785	ok	0.24	6.72e-02	1.40e-02	5.7	5.7	2.5	2.5	-25.1	-5.7	-16.4	4.81e-02	2.91e-02	-1.69e-02
1786	ok	0.24	7.92e-02	1.43e-02	5.7	5.7	2.5	2.5	-20.0	-4.7	-14.4	-0.1	-5.67e-02	8.53e-03
1787	ok	0.24	6.95e-02	1.40e-02	5.7	5.7	2.5	2.5	-25.0	-6.0	-16.1	5.07e-02	2.78e-02	-1.87e-02
1788	ok	0.24	8.00e-02	1.45e-02	5.7	5.7	2.5	2.5	-19.7	-5.0	-11.4	-0.1	-4.12e-02	1.02e-02
1789	ok	0.24	7.16e-02	1.41e-02	5.7	5.7	2.5	2.5	-24.8	-6.1	-15.5	5.59e-02	3.38e-02	-2.05e-02
1790	ok	0.24	8.14e-02	1.45e-02	5.7	5.7	2.5	2.5	-26.1	-6.1	-13.9	8.22e-02	-1.30e-03	1.33e-03
1791	ok	0.24	7.31e-02	1.41e-02	5.7	5.7	2.5	2.5	-15.8	-5.2	20.0	4.66e-02	4.51e-02	-0.2
1792	ok	0.24	8.31e-02	1.44e-02	5.7	5.7	2.5	2.5	-26.0	-6.2	-13.4	8.17e-02	-3.37e-03	-9.91e-04
1793	ok	0.24	7.54e-02	1.41e-02	5.7	5.7	2.5	2.5	-15.8	-5.8	21.3	4.44e-02	5.12e-02	-0.2
1794	ok	0.24	8.13e-02	1.44e-02	5.7	5.7	2.5	2.5	-17.5	-6.0	20.7	6.83e-02	-2.44e-02	-0.2
1795	ok	0.24	7.39e-02	1.42e-02	5.7	5.7	2.5	2.5	-16.0	-5.8	22.4	4.39e-02	5.19e-02	-0.2
1796	ok	0.24	7.82e-02	1.45e-02	5.7	5.7	2.5	2.5	-18.0	-4.4	-23.0	6.18e-02	-2.94e-02	0.2
1797	ok	0.24	7.16e-02	1.44e-02	5.7	5.7	2.5	2.5	-16.3	-5.8	23.2	4.49e-02	4.52e-02	-0.2
1798	ok	0.24	7.50e-02	1.46e-02	5.7	5.7	2.5	2.5	-18.0	-5.8	22.6	7.68e-02	-2.33e-02	-0.2
1799	ok	0.24	6.95e-02	1.45e-02	5.7	5.7	2.5	2.5	-16.5	-5.9	18.8	3.22e-02	-1.64e-02	-0.2
1800	ok	0.24	7.47e-02	1.46e-02	5.7	5.7	2.5	2.5	-18.2	-5.4	22.9	7.35e-02	-2.60e-02	-0.2
1801	ok	0.24	7.11e-02	1.44e-02	5.7	5.7	2.5	2.5	-16.4	-5.1	19.2	3.08e-02	-9.53e-03	-0.2
1802	ok	0.24	7.79e-02	1.45e-02	5.7	5.7	2.5	2.5	-18.0	-4.7	23.0	6.25e-02	-2.88e-02	-0.2
1803	ok	0.24	7.34e-02	1.43e-02	5.7	5.7	2.5	2.5	-16.3	-4.3	19.4	2.55e-02	-3.97e-03	-0.2
1804	ok	0.24	8.09e-02	1.44e-02	5.7	5.7	2.5	2.5	-19.4	-5.3	12.3	-0.1	-5.41e-02	8.60e-04
1805	ok	0.24	7.47e-02	1.42e-02	5.7	5.7	2.5	2.5	-24.4	-6.2	14.7	5.02e-02	3.52e-02	2.05e-02
1806	ok	0.24	8.27e-02	1.44e-02	5.7	5.7	2.5	2.5	-25.9	-6.3	13.5	8.21e-02	-2.78e-03	-1.83e-03
1807	ok	0.24	7.28e-02	1.41e-02	5.7	5.7	2.5	2.5	-24.5	-6.2	15.1	5.22e-02	3.85e-02	1.78e-02
1808	ok	0.24	8.07e-02	1.45e-02	5.7	5.7	2.5	2.5	-26.1	-6.3	14.0	8.21e-02	-1.01e-03	-4.35e-03
1809	ok	0.24	7.08e-02	1.41e-02	5.7	5.7	2.5	2.5	-24.8	-6.2	15.5	5.65e-02	3.26e-02	1.81e-02
1810	ok	0.24	7.94e-02	1.45e-02	5.7	5.7	2.5	2.5	-19.7	-5.1	11.4	-0.1	-4.06e-02	-1.35e-02
1811	ok	0.24	6.88e-02	1.39e-02	5.7	5.7	2.5	2.5	-25.0	-6.1	16.0	5.06e-02	2.70e-02	1.62e-02
1812	ok	0.24	7.88e-02	1.42e-02	5.7	5.7	2.5	2.5	-20.0	-4.7	14.4	-0.1	-5.67e-02	-1.18e-02
1813	ok	0.24	6.65e-02	1.40e-02	5.7	5.7	2.5	2.5	-25.1	-5.7	16.3	4.78e-02	2.87e-02	1.44e-02
1814	ok	0.24	7.87e-02	1.40e-02	5.7	5.7	2.5	2.5	-20.0	-4.3	15.1	-0.1	-5.79e-02	-1.18e-02
1815	ok	0.24	6.95e-02	1.42e-02	5.7	5.7	2.5	2.5	-21.0	-4.8	17.0	-9.82e-02	-9.59e-03	0.2
1816	ok	0.24	7.73e-02	1.44e-02	5.7	5.7	2.5	2.5	-19.3	-4.7	13.9	-0.2	-6.12e-02	0.1
1817	ok	0.24	7.66e-02	1.47e-02	5.7	5.7	2.5	2.5	-21.3	-3.8	18.3	-0.1	-6.56e-04	0.2
1818	ok	0.24	8.34e-02	1.49e-02	5.7	5.7	2.5	2.5	-21.3	-4.0	15.2	-0.2	-6.73e-02	0.1
1819	ok	0.24	7.41e-02	1.58e-02	5.7	5.7	2.5	2.5	-24.4	-2.5	18.5	-0.1	1.71e-03	0.1
1820	ok	0.24	7.62e-02	1.63e-02	5.7	5.7	2.5	2.5	-25.1	-2.8	14.9	-0.1	-6.23e-02	0.1
1821	ok	0.24	6.26e-02	1.46e-02	5.7	5.7	2.5	2.5	-27.3	-2.6	17.0	0.1	6.33e-02	0.2
1942	ok	0.24	6.67e-02	1.40e-02	5.7	5.7	2.5	2.5	-24.5	-1.7	-18.1	0.1	6.70e-02	-0.2
1943	ok	0.24	7.49e-02	1.41e-02	5.7	5.7	2.5	2.5	-20.6	-1.6	-21.4	5.56e-02	-8.95e-03	-0.2
1944	ok	0.24	7.24e-02	1.38e-02	5.7	5.7	2.5	2.5	-16.0	-3.6	-18.5	3.80e-02	5.71e-02	-0.3
1945	ok	0.24	7.07e-02	1.32e-02	5.7	5.7	2.5	2.5	-21.7	-4.6	-16.1	-7.49e-02	-4.50e-02	-0.1
1946	ok	0.24	7.22e-02	1.32e-02	5.7	5.7	2.5	2.5	-18.3	-5.1	-12.7	2.77e-02	4.26e-02	-0.1
1947	ok	0.24	6.53e-02	1.22e-02	5.7	5.7	2.5	2.5	-19.9	-5.8	-14.8	-7.21e-02	-4.16e-02	-0.1

1948	ok	0.24	6.58e-02	1.27e-02	5.7	5.7	2.5	2.5	-20.4	-6.1	-16.4	-2.74e-02	8.34e-03	-0.1
1949	ok	0.24	7.49e-02	1.16e-02	5.7	5.7	2.5	2.5	-20.2	-4.9	-13.9	-6.10e-02	-2.46e-02	6.85e-03
1950	ok	0.24	7.13e-02	1.24e-02	5.7	5.7	2.5	2.5	-20.9	-5.2	-15.5	-2.59e-02	1.34e-02	2.18e-02
1951	ok	0.24	7.56e-02	1.15e-02	5.7	5.7	2.5	2.5	-20.2	-5.6	-13.1	-7.21e-02	-5.35e-02	5.14e-03
1952	ok	0.24	7.04e-02	1.22e-02	5.7	5.7	2.5	2.5	-20.9	-5.7	-14.7	-3.10e-02	1.27e-02	2.00e-02
1953	ok	0.24	7.58e-02	1.15e-02	5.7	5.7	2.5	2.5	-20.1	-5.9	-12.3	-6.80e-02	-2.87e-02	2.81e-03
1954	ok	0.24	7.05e-02	1.18e-02	5.7	5.7	2.5	2.5	-11.6	-7.1	15.2	9.79e-03	4.59e-02	-0.2
1955	ok	0.24	7.56e-02	1.14e-02	5.7	5.7	2.5	2.5	-11.7	-7.0	13.1	2.62e-03	1.23e-02	-0.2
1956	ok	0.24	6.98e-02	1.16e-02	5.7	5.7	2.5	2.5	-11.4	-6.7	16.3	1.51e-02	4.96e-02	-0.2
1957	ok	0.24	7.47e-02	1.15e-02	5.7	5.7	2.5	2.5	-11.7	-6.6	14.3	6.04e-03	9.81e-03	-0.2
1958	ok	0.24	6.87e-02	1.17e-02	5.7	5.7	2.5	2.5	-11.4	-6.2	17.4	1.88e-02	5.51e-02	-0.2
1959	ok	0.24	7.29e-02	1.16e-02	5.7	5.7	2.5	2.5	-11.7	-6.2	15.4	7.68e-03	8.25e-03	-0.2
1960	ok	0.24	6.71e-02	1.18e-02	5.7	5.7	2.5	2.5	-11.5	-5.9	18.3	1.89e-02	5.41e-02	-0.2
1961	ok	0.24	7.01e-02	1.18e-02	5.7	5.7	2.5	2.5	-11.9	-6.0	16.3	7.96e-03	6.77e-03	-0.2
1962	ok	0.24	6.41e-02	1.20e-02	5.7	5.7	2.5	2.5	-11.8	-5.6	19.1	2.87e-02	4.46e-02	-0.2
1963	ok	0.24	6.62e-02	1.19e-02	5.7	5.7	2.5	2.5	-13.8	-5.7	18.2	-2.13e-02	-4.75e-02	-0.2
1964	ok	0.24	5.97e-02	1.21e-02	5.7	5.7	2.5	2.5	-12.0	-4.5	-19.6	2.31e-02	3.54e-02	0.3
1965	ok	0.24	6.53e-02	1.19e-02	5.7	5.7	2.5	2.5	-13.8	-5.6	18.8	-2.03e-02	-5.02e-02	-0.2
1966	ok	0.24	6.35e-02	1.21e-02	5.7	5.7	2.5	2.5	-11.8	-5.3	-19.1	2.85e-02	4.36e-02	0.2
1967	ok	0.24	6.92e-02	1.18e-02	5.7	5.7	2.5	2.5	-11.9	-5.8	-16.3	8.48e-03	6.41e-03	0.2
1968	ok	0.24	6.65e-02	1.19e-02	5.7	5.7	2.5	2.5	-11.5	-5.7	-18.3	1.92e-02	5.27e-02	0.2
1969	ok	0.24	7.20e-02	1.17e-02	5.7	5.7	2.5	2.5	-11.7	-6.1	-15.3	8.18e-03	8.00e-03	0.2
1970	ok	0.24	6.79e-02	1.17e-02	5.7	5.7	2.5	2.5	-11.3	-6.2	-17.3	1.89e-02	5.35e-02	0.2
1971	ok	0.24	7.38e-02	1.15e-02	5.7	5.7	2.5	2.5	-11.7	-6.6	-14.2	6.49e-03	9.58e-03	0.2
1972	ok	0.24	6.91e-02	1.16e-02	5.7	5.7	2.5	2.5	-11.4	-6.7	-16.2	1.53e-02	4.83e-02	0.2
1973	ok	0.24	7.47e-02	1.15e-02	5.7	5.7	2.5	2.5	-19.9	-6.1	11.9	-6.21e-02	-2.77e-02	-3.94e-03
1974	ok	0.24	6.99e-02	1.18e-02	5.7	5.7	2.5	2.5	-20.7	-6.0	13.9	-2.61e-02	1.80e-02	-2.13e-02
1975	ok	0.24	7.51e-02	1.15e-02	5.7	5.7	2.5	2.5	-20.1	-6.0	12.3	-6.78e-02	-2.80e-02	-5.57e-03
1976	ok	0.24	6.99e-02	1.22e-02	5.7	5.7	2.5	2.5	-20.9	-5.7	14.7	-3.16e-02	1.10e-02	-2.29e-02
1977	ok	0.24	7.51e-02	1.15e-02	5.7	5.7	2.5	2.5	-20.2	-5.7	13.0	-7.18e-02	-5.37e-02	-8.10e-03
1978	ok	0.24	7.10e-02	1.23e-02	5.7	5.7	2.5	2.5	-20.9	-5.2	15.4	-2.61e-02	1.24e-02	-2.48e-02
1979	ok	0.24	7.47e-02	1.16e-02	5.7	5.7	2.5	2.5	-20.2	-4.9	13.8	-6.08e-02	-2.41e-02	-9.66e-03
1980	ok	0.24	6.54e-02	1.27e-02	5.7	5.7	2.5	2.5	-20.4	-6.0	16.3	-2.75e-02	7.87e-03	0.1
1981	ok	0.24	6.48e-02	1.21e-02	5.7	5.7	2.5	2.5	-19.9	-5.8	14.7	-7.20e-02	-4.13e-02	0.1
1982	ok	0.24	7.17e-02	1.31e-02	5.7	5.7	2.5	2.5	-18.4	-5.1	12.6	2.77e-02	4.32e-02	0.1
1983	ok	0.24	7.01e-02	1.32e-02	5.7	5.7	2.5	2.5	-21.8	-4.6	16.0	-7.48e-02	-4.48e-02	0.1
1984	ok	0.24	7.18e-02	1.38e-02	5.7	5.7	2.5	2.5	-16.1	-3.6	18.4	3.80e-02	5.76e-02	0.3
1985	ok	0.24	7.43e-02	1.41e-02	5.7	5.7	2.5	2.5	-20.6	-1.6	21.3	5.51e-02	-9.64e-03	0.2
1986	ok	0.24	6.61e-02	1.40e-02	5.7	5.7	2.5	2.5	-24.5	-1.7	17.9	0.1	6.76e-02	0.2
2107	ok	0.24	6.53e-02	1.23e-02	5.7	5.7	2.5	2.5	-18.3	-0.7	-16.9	-0.1	1.88e-02	-0.2
2108	ok	0.24	7.46e-02	1.32e-02	5.7	5.7	2.5	2.5	-16.7	-2.2	-18.1	-5.95e-02	-5.82e-02	-0.3
2109	ok	0.24	6.65e-02	1.27e-02	5.7	5.7	2.5	2.5	-13.4	-4.1	-18.5	6.35e-02	4.24e-02	-0.2
2110	ok	0.24	7.08e-02	1.28e-02	5.7	5.7	2.5	2.5	-13.3	-4.8	-19.0	6.80e-02	-5.08e-02	-0.3
2111	ok	0.24	6.13e-02	1.27e-02	5.7	5.7	2.5	2.5	-11.0	-6.4	-17.7	6.39e-02	4.67e-02	-0.3
2112	ok	0.24	6.39e-02	1.20e-02	5.7	5.7	2.5	2.5	-12.1	-6.6	-18.9	6.80e-02	4.87e-02	-0.3
2113	ok	0.24	7.17e-02	1.23e-02	5.7	5.7	2.5	2.5	-9.5	-8.2	-17.3	6.42e-02	4.78e-02	-0.3
2114	ok	0.24	7.53e-02	1.19e-02	5.7	5.7	2.5	2.5	-11.6	-8.4	-18.5	6.57e-02	4.60e-02	-0.3
2115	ok	0.24	7.30e-02	1.15e-02	5.7	5.7	2.5	2.5	-14.1	-8.1	-11.2	7.32e-02	3.27e-03	-0.1
2116	ok	0.24	7.86e-02	1.09e-02	5.7	5.7	2.5	2.5	-10.7	-8.1	11.4	5.31e-02	-4.08e-02	-0.2
2117	ok	0.24	7.35e-02	1.14e-02	5.7	5.7	2.5	2.5	-11.5	-9.5	13.5	3.69e-02	3.21e-02	-0.2
2118	ok	0.24	7.90e-02	1.09e-02	5.7	5.7	2.5	2.5	-10.8	-8.4	12.8	5.13e-02	-4.19e-02	-0.2
2119	ok	0.24	7.37e-02	1.12e-02	5.7	5.7	2.5	2.5	-11.7	-9.5	14.9	3.68e-02	3.47e-02	-0.2
2120	ok	0.24	7.88e-02	1.10e-02	5.7	5.7	2.5	2.5	-10.6	-8.1	14.2	4.87e-02	-4.41e-02	-0.2
2121	ok	0.24	7.20e-02	1.13e-02	5.7	5.7	2.5	2.5	-11.5	-9.1	16.0	3.94e-02	4.20e-02	-0.2
2122	ok	0.24	7.74e-02	1.10e-02	5.7	5.7	2.5	2.5	-10.5	-7.5	15.3	3.96e-02	-4.30e-02	-0.2
2123	ok	0.24	6.91e-02	1.14e-02	5.7	5.7	2.5	2.5	-9.6	-8.4	16.3	5.91e-02	5.46e-02	-0.2
2124	ok	0.24	7.46e-02	1.12e-02	5.7	5.7	2.5	2.5	-10.8	-8.1	15.3	5.62e-02	4.82e-02	-0.2
2125	ok	0.24	6.51e-02	1.16e-02	5.7	5.7	2.5	2.5	-9.8	-7.9	17.3	5.66e-02	5.76e-02	-0.2
2126	ok	0.24	7.06e-02	1.14e-02	5.7	5.7	2.5	2.5	-11.0	-7.6	16.2	5.33e-02	4.68e-02	-0.2
2127	ok	0.24	5.97e-02	1.19e-02	5.7	5.7	2.5	2.5	-10.0	-7.3	18.2	5.14e-02	5.15e-02	-0.2
2128	ok	0.24	6.60e-02	1.14e-02	5.7	5.7	2.5	2.5	-11.2	-7.0	16.9	5.23e-02	4.73e-02	-0.2
2129	ok	0.24	5.69e-02	1.20e-02	5.7	5.7	2.5	2.5	-11.9	-6.8	-19.4	3.57e-02	4.39e-02	0.3
2130	ok	0.24	6.56e-02	1.15e-02	5.7	5.7	2.5	2.5	-10.8	-4.3	18.4	3.31e-02	-4.02e-02	-0.2
2131	ok	0.24	5.93e-02	1.19e-02	5.7	5.7	2.5	2.5	-11.7	-7.3	-18.9	3.72e-02	4.72e-02	0.2
2132	ok	0.24	7.00e-02	1.15e-02	5.7	5.7	2.5	2.5	-10.6	-6.2	-17.2	3.41e-02	-4.10e-02	0.2
2133	ok	0.24	6.45e-02	1.17e-02	5.7	5.7	2.5	2.5	-11.5	-7.9	-18.1	4.05e-02	5.36e-02	0.2
2134	ok	0.24	7.37e-02	1.13e-02	5.7	5.7	2.5	2.5	-10.5	-6.8	-16.2	3.66e-02	-4.15e-02	0.2
2135	ok	0.24	6.85e-02	1.14e-02	5.7	5.7	2.5	2.5	-11.4	-8.5	-17.0	4.12e-02	4.99e-02	0.2
2136	ok	0.24	7.65e-02	1.11e-02	5.7	5.7	2.5	2.5	-10.4	-7.4	-15.2	3.95e-02	-4.28e-02	0.2
2137	ok	0.24	7.13e-02	1.13e-02	5.7	5.7	2.5	2.5	-11.4	-9.1	-15.9	3.88e-02	3.99e-02	0.2
2138	ok	0.24	7.79e-02	1.10e-02	5.7	5.7	2.5	2.5	-10.6	-8.0	-14.1	4.86e-02	-4.41e-02	0.2
2139	ok	0.24	7.30e-02	1.12e-02	5.7	5.7	2.5	2.5	-9.6	-9.1	-11.6	4.03e-02	-2.49e-02	0.2
2140	ok	0.24	7.83e-02	1.10e-02	5.7	5.7	2.5	2.5	-10.8	-8.3	-12.8	5.10e-02	-4.19e-02	0.2
2141	ok	0.24	7.30e-02	1.13e-02	5.7	5.7	2.5	2.5	-9.8	-9.1	-10.2	5.24e-02	-2.80e-02	0.2
2142	ok	0.24	7.81e-02	1.09e-02	5.7	5.7	2.5	2.5	-10.7	-8.0	-11.5	5.28e-02	-4.08e-02	0.2
2143	ok	0.24	7.26e-02	1.15e-02	5.7	5.7	2.5	2.5	-14.1	-8.0	11.1	7.33e-02	3.80e-03	0.1
2144	ok	0.24	7.50e-02	1.18e-02	5.7	5.7	2.5	2.5	-11.6	-8.4	18.4	6.59e-02	4.58e-02	0.3
2145	ok	0.24	7.14e-02	1.22e-02	5.7	5.7	2.5	2.5	-9.5	-8.1	17.2	6.45e-02	4.80e-02	0.3

2146	ok	0.24	6.34e-02	1.20e-02	5.7	5.7	2.5	2.5	-12.1	-6.6	18.8	6.81e-02	4.86e-02	0.3
2147	ok	0.24	6.09e-02	1.26e-02	5.7	5.7	2.5	2.5	-11.0	-6.3	17.7	6.39e-02	4.66e-02	0.2
2148	ok	0.24	7.03e-02	1.28e-02	5.7	5.7	2.5	2.5	-13.3	-4.7	18.9	6.78e-02	-5.07e-02	0.3
2149	ok	0.24	6.60e-02	1.27e-02	5.7	5.7	2.5	2.5	-13.4	-4.1	18.4	6.33e-02	4.18e-02	0.2
2150	ok	0.24	7.41e-02	1.32e-02	5.7	5.7	2.5	2.5	-16.7	-2.2	18.1	-5.92e-02	-5.82e-02	0.3
2151	ok	0.24	6.47e-02	1.23e-02	5.7	5.7	2.5	2.5	-18.3	-0.7	16.8	-0.1	1.86e-02	0.2
2382	ok	0.24	6.47e-02	1.07e-02	5.7	5.7	2.5	2.5	-17.0	-2.1	-14.9	-0.2	1.04e-02	-0.2
2383	ok	0.24	6.96e-02	1.26e-02	5.7	5.7	2.5	2.5	-10.9	-3.2	-17.2	-6.55e-02	-4.63e-02	-0.2
2384	ok	0.24	6.53e-02	1.19e-02	5.7	5.7	2.5	2.5	-12.7	-4.8	-16.5	3.98e-02	2.17e-02	-0.2
2385	ok	0.24	7.24e-02	1.27e-02	5.7	5.7	2.5	2.5	-13.6	-5.5	-20.9	8.80e-02	4.28e-02	-0.2
2386	ok	0.24	6.56e-02	1.22e-02	5.7	5.7	2.5	2.5	-11.0	-7.4	-20.2	4.88e-02	-5.40e-03	-0.3
2387	ok	0.24	7.35e-02	1.26e-02	5.7	5.7	2.5	2.5	-12.3	-8.4	-19.9	8.90e-02	4.25e-02	-0.3
2388	ok	0.24	6.56e-02	1.22e-02	5.7	5.7	2.5	2.5	-10.2	-9.9	-19.3	4.39e-02	-1.61e-02	-0.3
2389	ok	0.24	7.25e-02	1.28e-02	5.7	5.7	2.5	2.5	-11.9	-10.6	-19.5	8.77e-02	4.01e-02	-0.3
2390	ok	0.24	7.06e-02	1.17e-02	5.7	5.7	2.5	2.5	-7.3	-10.8	-18.8	-7.87e-03	-3.53e-02	-0.3
2391	ok	0.24	7.84e-02	1.15e-02	5.7	5.7	2.5	2.5	-6.7	-11.3	-16.0	-4.55e-02	-5.02e-02	-0.3
2392	ok	0.24	7.08e-02	1.16e-02	5.7	5.7	2.5	2.5	-7.3	-11.7	-18.1	-4.01e-03	-3.41e-02	-0.3
2393	ok	0.24	7.87e-02	1.14e-02	5.7	5.7	2.5	2.5	-6.7	-11.5	-15.4	-4.08e-02	-4.97e-02	-0.3
2394	ok	0.24	7.04e-02	1.15e-02	5.7	5.7	2.5	2.5	-7.7	-11.7	-17.6	8.94e-04	-2.93e-02	-0.3
2395	ok	0.24	7.81e-02	1.11e-02	5.7	5.7	2.5	2.5	-11.6	-10.7	15.5	7.86e-02	-2.26e-02	-0.2
2396	ok	0.24	6.88e-02	1.09e-02	5.7	5.7	2.5	2.5	-9.7	-10.9	12.5	2.96e-02	-1.95e-02	-0.2
2397	ok	0.24	7.59e-02	1.14e-02	5.7	5.7	2.5	2.5	-11.5	-10.0	16.6	7.76e-02	-1.98e-02	-0.2
2398	ok	0.24	6.60e-02	1.12e-02	5.7	5.7	2.5	2.5	-9.7	-10.2	13.6	2.62e-02	-2.45e-02	-0.2
2399	ok	0.24	7.21e-02	1.17e-02	5.7	5.7	2.5	2.5	-11.5	-9.6	14.1	8.33e-02	4.64e-02	-0.2
2400	ok	0.24	6.24e-02	1.15e-02	5.7	5.7	2.5	2.5	-9.7	-9.5	14.6	2.44e-02	-3.18e-02	-0.2
2401	ok	0.24	6.75e-02	1.19e-02	5.7	5.7	2.5	2.5	-11.6	-8.9	15.1	8.10e-02	4.34e-02	-0.2
2402	ok	0.24	5.83e-02	1.16e-02	5.7	5.7	2.5	2.5	-9.8	-8.8	15.3	2.51e-02	-3.77e-02	-0.2
2403	ok	0.24	6.17e-02	1.20e-02	5.7	5.7	2.5	2.5	-11.7	-8.1	15.7	8.64e-02	4.40e-02	-0.2
2404	ok	0.24	5.41e-02	1.15e-02	5.7	5.7	2.5	2.5	-9.7	-7.8	15.8	2.44e-02	-3.67e-02	-0.2
2405	ok	0.24	6.10e-02	1.19e-02	5.7	5.7	2.5	2.5	-11.6	-7.2	-19.3	7.54e-02	-1.87e-02	0.2
2406	ok	0.24	5.71e-02	1.15e-02	5.7	5.7	2.5	2.5	-9.4	-6.0	16.2	2.33e-02	-3.20e-02	-0.3
2407	ok	0.24	6.60e-02	1.19e-02	5.7	5.7	2.5	2.5	-11.5	-8.2	-18.6	7.18e-02	-1.78e-02	0.2
2408	ok	0.24	6.11e-02	1.14e-02	5.7	5.7	2.5	2.5	-9.2	-4.3	16.5	1.81e-02	-3.03e-02	-0.2
2409	ok	0.24	7.09e-02	1.16e-02	5.7	5.7	2.5	2.5	-11.5	-9.1	-17.6	7.29e-02	-1.74e-02	0.2
2410	ok	0.24	6.45e-02	1.11e-02	5.7	5.7	2.5	2.5	-7.4	-9.5	-13.1	1.17e-02	-2.78e-02	0.2
2411	ok	0.24	7.47e-02	1.13e-02	5.7	5.7	2.5	2.5	-11.5	-9.9	-16.5	7.85e-02	-1.95e-02	0.2
2412	ok	0.24	6.76e-02	1.09e-02	5.7	5.7	2.5	2.5	-7.4	-9.7	-15.0	3.59e-02	2.81e-02	0.2
2413	ok	0.24	7.71e-02	1.11e-02	5.7	5.7	2.5	2.5	-11.6	-10.6	-15.4	7.93e-02	-2.22e-02	0.2
2414	ok	0.24	6.93e-02	1.15e-02	5.7	5.7	2.5	2.5	-7.6	-11.7	17.6	1.84e-03	-3.06e-02	0.3
2415	ok	0.24	7.80e-02	1.14e-02	5.7	5.7	2.5	2.5	-6.6	-11.4	15.4	-3.99e-02	-4.88e-02	0.3
2416	ok	0.24	6.99e-02	1.16e-02	5.7	5.7	2.5	2.5	-7.3	-11.7	18.1	-3.65e-03	-3.51e-02	0.3
2417	ok	0.24	7.79e-02	1.15e-02	5.7	5.7	2.5	2.5	-6.7	-11.2	16.0	-4.52e-02	-4.95e-02	0.3
2418	ok	0.24	7.00e-02	1.16e-02	5.7	5.7	2.5	2.5	-7.3	-10.7	18.7	-8.05e-03	-3.56e-02	0.3
2419	ok	0.24	7.30e-02	1.27e-02	5.7	5.7	2.5	2.5	-11.9	-10.5	19.4	8.68e-02	3.94e-02	0.3
2420	ok	0.24	6.60e-02	1.22e-02	5.7	5.7	2.5	2.5	-10.2	-9.8	19.3	4.36e-02	-1.54e-02	0.3
2421	ok	0.24	7.43e-02	1.26e-02	5.7	5.7	2.5	2.5	-12.3	-8.4	19.8	8.84e-02	4.21e-02	0.3
2422	ok	0.24	6.68e-02	1.22e-02	5.7	5.7	2.5	2.5	-11.0	-7.3	20.1	4.87e-02	-4.70e-03	0.3
2423	ok	0.24	7.35e-02	1.27e-02	5.7	5.7	2.5	2.5	-13.6	-5.5	20.9	8.77e-02	4.25e-02	0.2
2424	ok	0.24	6.52e-02	1.19e-02	5.7	5.7	2.5	2.5	-12.7	-4.8	16.4	3.99e-02	2.15e-02	0.2
2425	ok	0.24	6.90e-02	1.26e-02	5.7	5.7	2.5	2.5	-10.9	-3.2	17.1	-6.61e-02	-4.63e-02	0.2
2426	ok	0.24	6.60e-02	1.07e-02	5.7	5.7	2.5	2.5	-17.0	-2.1	14.8	-0.2	1.09e-02	0.2
2552	ok	0.24	6.26e-02	1.07e-02	5.7	5.7	2.5	2.5	-10.8	-2.0	-15.0	4.38e-02	5.63e-02	-0.2
2553	ok	0.24	6.64e-02	1.07e-02	5.7	5.7	2.5	2.5	-11.8	-4.4	-17.4	-6.78e-03	-3.01e-02	-0.2
2554	ok	0.24	6.90e-02	1.11e-02	5.7	5.7	2.5	2.5	-7.4	-6.7	-17.2	-1.57e-02	2.92e-02	-0.2
2555	ok	0.24	7.11e-02	1.15e-02	5.7	5.7	2.5	2.5	-9.2	-8.2	-18.5	-9.91e-03	-2.93e-02	-0.3
2556	ok	0.24	7.09e-02	1.16e-02	5.7	5.7	2.5	2.5	-6.1	-10.2	-17.1	-8.95e-03	3.30e-02	-0.3
2557	ok	0.24	7.30e-02	1.18e-02	5.7	5.7	2.5	2.5	-8.3	-11.2	-17.7	-5.42e-03	-2.81e-02	-0.3
2558	ok	0.24	7.15e-02	1.19e-02	5.7	5.7	2.5	2.5	-5.8	-12.6	-16.8	-9.40e-03	3.36e-02	-0.3
2559	ok	0.24	7.34e-02	1.21e-02	5.7	5.7	2.5	2.5	-8.0	-13.3	-17.1	-3.38e-03	-2.59e-02	-0.3
2560	ok	0.24	7.14e-02	1.21e-02	5.7	5.7	2.5	2.5	-5.8	-14.1	-16.4	-1.17e-02	3.13e-02	-0.3
2561	ok	0.24	7.34e-02	1.23e-02	5.7	5.7	2.5	2.5	-8.1	-14.5	-16.5	-3.18e-03	-2.78e-02	-0.3
2562	ok	0.24	7.10e-02	1.22e-02	5.7	5.7	2.5	2.5	-5.9	-14.8	-16.2	-1.30e-02	2.80e-02	-0.3
2563	ok	0.24	7.31e-02	1.23e-02	5.7	5.7	2.5	2.5	-8.1	-14.8	-16.1	-1.57e-03	-2.79e-02	-0.3
2564	ok	0.24	7.11e-02	1.20e-02	5.7	5.7	2.5	2.5	-5.8	-14.6	-16.2	-1.11e-02	2.73e-02	-0.3
2565	ok	0.24	7.34e-02	1.19e-02	5.7	5.7	2.5	2.5	-5.9	-14.8	-17.5	-8.91e-03	2.16e-02	-0.3
2566	ok	0.24	7.09e-02	1.17e-02	5.7	5.7	2.5	2.5	-5.7	-14.0	-17.5	-8.33e-04	-8.59e-03	-0.3
2567	ok	0.24	7.18e-02	1.04e-02	5.7	5.7	2.5	2.5	-7.7	-12.3	14.6	-6.03e-04	-3.00e-02	-0.2
2568	ok	0.24	6.71e-02	1.04e-02	5.7	5.7	2.5	2.5	-7.7	-12.0	14.7	1.32e-02	3.70e-02	-0.2
2569	ok	0.24	7.03e-02	1.04e-02	5.7	5.7	2.5	2.5	-7.7	-11.2	15.1	-1.69e-03	-3.19e-02	-0.2
2570	ok	0.24	6.28e-02	1.03e-02	5.7	5.7	2.5	2.5	-5.5	-10.6	16.3	3.02e-03	4.07e-02	-0.2
2571	ok	0.24	6.57e-02	1.03e-02	5.7	5.7	2.5	2.5	-7.7	-10.0	15.7	-3.10e-03	-3.51e-02	-0.2
2572	ok	0.24	5.75e-02	1.03e-02	5.7	5.7	2.5	2.5	-5.5	-9.3	16.9	3.94e-03	3.66e-02	-0.2
2573	ok	0.24	6.11e-02	1.02e-02	5.7	5.7	2.5	2.5	-7.6	-8.5	16.2	-4.78e-03	-3.96e-02	-0.2
2574	ok	0.24	5.22e-02	9.97e-03	5.7	5.7	2.5	2.5	-5.6	-7.2	17.5	1.62e-02	3.10e-02	-0.2
2575	ok	0.24	6.03e-02	1.02e-02	5.7	5.7	2.5	2.5	-7.6	-8.5	-16.2	-4.41e-03	-4.02e-02	0.2
2576	ok	0.24	5.61e-02	1.02e-02	5.7	5.7	2.5	2.5	-5.5	-9.0	-16.9	2.01e-02	3.29e-02	0.2
2577	ok	0.24	6.42e-02	1.03e-02	5.7	5.7	2.5	2.5	-7.7	-9.8	-15.6	-2.96e-03	-3.57e-02	0.2
2578	ok	0.24	6.12e-02	1.02e-02	5.7	5.7	2.5	2.5	-5.5	-10.4	-16.2	3.04e-03	3.68e-02	0.2

2579	ok	0.24	6.87e-02	1.04e-02	5.7	5.7	2.5	2.5	-7.7	-11.1	-15.1	-1.63e-03	-3.25e-02	0.2
2580	ok	0.24	6.57e-02	1.03e-02	5.7	5.7	2.5	2.5	-5.5	-11.6	-15.5	4.09e-04	3.73e-02	0.2
2581	ok	0.24	7.04e-02	1.04e-02	5.7	5.7	2.5	2.5	-7.7	-12.2	-14.6	-6.17e-04	-3.05e-02	0.2
2582	ok	0.24	6.95e-02	1.17e-02	5.7	5.7	2.5	2.5	-5.7	-13.9	17.5	-8.40e-04	-1.11e-02	0.3
2583	ok	0.24	7.22e-02	1.19e-02	5.7	5.7	2.5	2.5	-5.8	-13.7	16.4	-3.90e-03	-2.58e-02	0.3
2584	ok	0.24	7.00e-02	1.20e-02	5.7	5.7	2.5	2.5	-5.8	-14.6	16.2	-1.08e-02	2.63e-02	0.3
2585	ok	0.24	7.26e-02	1.22e-02	5.7	5.7	2.5	2.5	-8.1	-14.7	16.0	-1.54e-03	-2.81e-02	0.3
2586	ok	0.24	7.08e-02	1.21e-02	5.7	5.7	2.5	2.5	-5.9	-14.7	16.1	-1.25e-02	2.85e-02	0.3
2587	ok	0.24	7.36e-02	1.22e-02	5.7	5.7	2.5	2.5	-8.1	-14.4	16.4	-2.93e-03	-2.78e-02	0.3
2588	ok	0.24	7.20e-02	1.21e-02	5.7	5.7	2.5	2.5	-5.8	-14.0	16.3	-1.11e-02	3.26e-02	0.3
2589	ok	0.24	7.42e-02	1.21e-02	5.7	5.7	2.5	2.5	-8.0	-13.2	17.0	-2.96e-03	-2.58e-02	0.3
2590	ok	0.24	7.26e-02	1.18e-02	5.7	5.7	2.5	2.5	-5.8	-12.5	16.7	-8.95e-03	3.50e-02	0.3
2591	ok	0.24	7.42e-02	1.18e-02	5.7	5.7	2.5	2.5	-8.3	-11.1	17.6	-4.94e-03	-2.78e-02	0.3
2592	ok	0.24	7.22e-02	1.16e-02	5.7	5.7	2.5	2.5	-6.1	-10.1	17.0	-8.74e-03	3.40e-02	0.2
2593	ok	0.24	7.24e-02	1.14e-02	5.7	5.7	2.5	2.5	-9.2	-8.2	18.4	-9.44e-03	-2.90e-02	0.2
2594	ok	0.24	7.03e-02	1.11e-02	5.7	5.7	2.5	2.5	-7.3	-6.6	17.1	-1.58e-02	2.98e-02	0.2
2595	ok	0.24	6.75e-02	1.06e-02	5.7	5.7	2.5	2.5	-11.7	-4.4	17.3	-6.55e-03	-2.99e-02	0.2
2596	ok	0.24	6.38e-02	1.07e-02	5.7	5.7	2.5	2.5	-14.6	-2.6	16.5	3.00e-02	6.54e-02	0.2
2870	ok	0.24	5.85e-02	8.87e-03	5.7	5.7	2.5	2.5	-8.1	-1.9	-12.1	-8.40e-02	4.17e-02	-0.2
2871	ok	0.24	7.29e-02	9.66e-03	5.7	5.7	2.5	2.5	-5.6	-5.4	-14.0	-7.75e-02	-0.1	-0.2
2872	ok	0.24	6.99e-02	1.02e-02	5.7	5.7	2.5	2.5	-7.3	-7.0	-17.2	-2.79e-02	-3.54e-02	-0.2
2873	ok	0.24	7.91e-02	1.12e-02	5.7	5.7	2.5	2.5	-7.6	-11.3	-17.1	-3.27e-02	-7.42e-02	-0.2
2874	ok	0.24	7.54e-02	1.17e-02	5.7	5.7	2.5	2.5	-6.5	-12.2	-18.4	-1.84e-02	-2.35e-02	-0.3
2875	ok	0.24	8.00e-02	1.19e-02	5.7	5.7	2.5	2.5	-7.0	-14.9	-16.9	-2.86e-02	-6.75e-02	-0.3
2876	ok	0.24	7.79e-02	1.25e-02	5.7	5.7	2.5	2.5	-6.4	-15.6	-18.1	-1.66e-02	-1.86e-02	-0.3
2877	ok	0.24	8.02e-02	1.25e-02	5.7	5.7	2.5	2.5	-6.8	-17.1	-16.6	-2.91e-02	-6.72e-02	-0.3
2878	ok	0.24	7.87e-02	1.30e-02	5.7	5.7	2.5	2.5	-6.6	-17.7	-17.9	-1.64e-02	-2.22e-02	-0.3
2879	ok	0.24	7.99e-02	1.29e-02	5.7	5.7	2.5	2.5	-6.9	-18.3	-16.3	-2.87e-02	-6.69e-02	-0.3
2880	ok	0.24	7.85e-02	1.32e-02	5.7	5.7	2.5	2.5	-6.6	-18.0	-15.9	-1.55e-02	2.67e-02	-0.3
2881	ok	0.24	7.87e-02	1.30e-02	5.7	5.7	2.5	2.5	-6.8	-18.5	-16.2	-2.72e-02	-6.58e-02	-0.3
2882	ok	0.24	7.75e-02	1.32e-02	5.7	5.7	2.5	2.5	-6.6	-17.8	-16.1	-1.43e-02	3.31e-02	-0.3
2883	ok	0.24	7.71e-02	1.29e-02	5.7	5.7	2.5	2.5	-6.7	-18.0	-16.2	-2.56e-02	-6.69e-02	-0.3
2884	ok	0.24	7.62e-02	1.30e-02	5.7	5.7	2.5	2.5	-6.7	-18.2	-17.3	-1.41e-02	-2.88e-02	-0.3
2885	ok	0.24	7.29e-02	1.21e-02	5.7	5.7	2.5	2.5	-4.3	-16.2	-16.4	6.93e-03	-6.53e-02	-0.3
2886	ok	0.24	7.00e-02	1.21e-02	5.7	5.7	2.5	2.5	-4.3	-13.8	-16.7	3.48e-02	5.02e-02	-0.2
2887	ok	0.24	7.02e-02	1.16e-02	5.7	5.7	2.5	2.5	-3.0	-14.4	-16.3	-2.58e-02	-6.90e-02	-0.3
2888	ok	0.24	6.32e-02	1.15e-02	5.7	5.7	2.5	2.5	-4.3	-13.3	-16.9	2.28e-02	5.19e-02	-0.2
2889	ok	0.24	6.38e-02	1.13e-02	5.7	5.7	2.5	2.5	-3.1	-12.6	-8.8	-2.47e-02	-6.74e-02	-0.3
2890	ok	0.24	5.37e-02	1.09e-02	5.7	5.7	2.5	2.5	-6.1	-10.9	17.0	1.63e-02	5.60e-02	-0.2
2891	ok	0.24	5.88e-02	1.09e-02	5.7	5.7	2.5	2.5	-3.1	-11.0	17.0	-2.68e-02	-6.92e-02	-0.2
2892	ok	0.24	4.96e-02	1.05e-02	5.7	5.7	2.5	2.5	-6.2	-10.6	16.0	-3.97e-03	-4.49e-02	-0.2
2893	ok	0.24	5.85e-02	1.04e-02	5.7	5.7	2.5	2.5	-3.1	-9.0	-16.9	-2.63e-02	-6.99e-02	0.2
2894	ok	0.24	5.33e-02	1.08e-02	5.7	5.7	2.5	2.5	-6.2	-10.8	-16.9	1.41e-02	5.04e-02	0.2
2895	ok	0.24	6.29e-02	1.13e-02	5.7	5.7	2.5	2.5	-3.1	-12.6	8.9	-2.46e-02	-6.85e-02	0.3
2896	ok	0.24	6.14e-02	1.16e-02	5.7	5.7	2.5	2.5	-4.4	-13.5	17.0	2.02e-02	4.62e-02	0.2
2897	ok	0.24	6.83e-02	1.17e-02	5.7	5.7	2.5	2.5	-3.0	-14.5	16.3	-2.62e-02	-6.85e-02	0.3
2898	ok	0.24	6.77e-02	1.21e-02	5.7	5.7	2.5	2.5	-4.4	-14.0	16.8	3.28e-02	4.59e-02	0.2
2899	ok	0.24	7.09e-02	1.21e-02	5.7	5.7	2.5	2.5	-4.3	-16.1	16.4	6.35e-03	-6.62e-02	0.3
2900	ok	0.24	7.43e-02	1.30e-02	5.7	5.7	2.5	2.5	-6.7	-18.2	17.3	-1.41e-02	-2.88e-02	0.3
2901	ok	0.24	7.56e-02	1.29e-02	5.7	5.7	2.5	2.5	-6.7	-17.9	16.2	-2.57e-02	-6.74e-02	0.3
2902	ok	0.24	7.64e-02	1.32e-02	5.7	5.7	2.5	2.5	-6.6	-17.8	16.0	-1.44e-02	3.15e-02	0.3
2903	ok	0.24	7.81e-02	1.30e-02	5.7	5.7	2.5	2.5	-6.8	-18.4	16.1	-2.70e-02	-6.59e-02	0.3
2904	ok	0.24	7.85e-02	1.32e-02	5.7	5.7	2.5	2.5	-6.6	-17.9	15.8	-1.52e-02	2.64e-02	0.3
2905	ok	0.24	8.02e-02	1.28e-02	5.7	5.7	2.5	2.5	-6.9	-18.1	16.2	-2.84e-02	-6.66e-02	0.3
2906	ok	0.24	7.95e-02	1.30e-02	5.7	5.7	2.5	2.5	-6.5	-17.1	15.9	-1.57e-02	2.18e-02	0.3
2907	ok	0.24	8.11e-02	1.24e-02	5.7	5.7	2.5	2.5	-6.8	-17.0	16.6	-2.86e-02	-6.69e-02	0.3
2908	ok	0.24	7.92e-02	1.24e-02	5.7	5.7	2.5	2.5	-6.4	-15.4	16.3	-1.57e-02	1.76e-02	0.3
2909	ok	0.24	8.13e-02	1.18e-02	5.7	5.7	2.5	2.5	-7.0	-14.8	16.8	-2.82e-02	-6.71e-02	0.2
2910	ok	0.24	7.69e-02	1.17e-02	5.7	5.7	2.5	2.5	-6.5	-12.1	18.4	-1.77e-02	-2.17e-02	0.2
2911	ok	0.24	8.05e-02	1.11e-02	5.7	5.7	2.5	2.5	-7.6	-11.2	17.1	-3.23e-02	-7.41e-02	0.2
2912	ok	0.24	7.12e-02	1.01e-02	5.7	5.7	2.5	2.5	-7.3	-6.9	17.2	-2.73e-02	-3.40e-02	0.2
2913	ok	0.24	7.41e-02	9.62e-03	5.7	5.7	2.5	2.5	-5.6	-5.3	13.9	-7.74e-02	-0.1	0.2
2914	ok	0.24	5.95e-02	8.83e-03	5.7	5.7	2.5	2.5	-8.1	-1.9	12.0	-8.63e-02	3.96e-02	0.2
3292	ok	0.24	5.20e-02	6.64e-03	5.7	5.7	2.5	2.5	-10.1	-2.3	-9.3	-0.4	-8.45e-02	-0.1
3293	ok	0.24	6.54e-02	7.79e-03	5.7	5.7	2.5	2.5	-6.5	-6.8	-12.1	-0.1	-5.19e-02	-0.2
3294	ok	0.24	7.28e-02	8.96e-03	5.7	5.7	2.5	2.5	-4.9	-10.8	-13.2	-7.96e-02	-8.26e-02	-0.2
3295	ok	0.24	7.34e-02	1.07e-02	5.7	5.7	2.5	2.5	-6.0	-12.4	-16.1	-3.83e-02	-8.52e-02	-0.2
3296	ok	0.24	7.87e-02	1.13e-02	5.7	5.7	2.5	2.5	-4.6	-16.4	-13.9	-6.57e-02	-9.42e-02	-0.2
3297	ok	0.24	7.50e-02	1.25e-02	5.7	5.7	2.5	2.5	-5.8	-17.7	-16.8	-3.69e-02	-9.13e-02	-0.3
3298	ok	0.24	8.06e-02	1.27e-02	5.7	5.7	2.5	2.5	-4.6	-19.6	-14.2	-6.28e-02	-9.97e-02	-0.2
3299	ok	0.24	7.56e-02	1.35e-02	5.7	5.7	2.5	2.5	-5.8	-20.7	-17.1	-3.22e-02	-9.16e-02	-0.3
3300	ok	0.24	8.17e-02	1.35e-02	5.7	5.7	2.5	2.5	-4.6	-21.3	-14.3	-5.60e-02	-0.1	-0.2
3301	ok	0.24	7.58e-02	1.41e-02	5.7	5.7	2.5	2.5	-5.8	-22.3	-17.2	-2.50e-02	-9.02e-02	-0.3
3302	ok	0.24	8.16e-02	1.39e-02	5.7	5.7	2.5	2.5	-4.7	-22.0	-14.4	-5.58e-02	-0.1	-0.2
3303	ok	0.24	7.39e-02	1.43e-02	5.7	5.7	2.5	2.5	-5.8	-22.8	-17.3	-2.90e-02	-9.57e-02	-0.3
3304	ok	0.24	7.97e-02	1.39e-02	5.7	5.7	2.5	2.5	-4.7	-21.7	-14.8	-6.09e-02	-0.1	-0.2
3305	ok	0.24	7.21e-02	1.42e-02	5.7	5.7	2.5	2.5	-5.7	-22.4	-17.5	-3.93e-02	-0.1	-0.3
3306	ok	0.24	7.55e-02	1.37e-02	5.7	5.7	2.5	2.5	-4.7	-20.5	-15.1	-6.76e-02	-0.1	-0.2

3307	ok	0.24	6.74e-02	1.39e-02	5.7	5.7	2.5	2.5	-5.6	-21.2	-17.8	-4.49e-02	-0.1	-0.3
3308	ok	0.24	6.96e-02	1.33e-02	5.7	5.7	2.5	2.5	-4.6	-18.6	-15.4	-6.98e-02	-0.1	-0.2
3309	ok	0.24	6.09e-02	1.34e-02	5.7	5.7	2.5	2.5	-5.4	-19.3	-18.1	-4.39e-02	-0.1	-0.3
3310	ok	0.24	6.43e-02	1.25e-02	5.7	5.7	2.5	2.5	-4.4	-16.1	-15.7	-7.30e-02	-0.1	-0.2
3311	ok	0.24	5.41e-02	1.26e-02	5.7	5.7	2.5	2.5	-4.2	-16.6	-18.4	-4.66e-02	-0.1	-0.3
3312	ok	0.24	4.80e-02	1.14e-02	5.7	5.7	2.5	2.5	-4.4	-14.7	-10.4	-5.18e-02	6.95e-02	-0.2
3313	ok	0.24	5.42e-02	1.12e-02	5.7	5.7	2.5	2.5	-4.2	-14.4	14.5	-3.44e-02	-8.73e-02	-0.2
3314	ok	0.24	5.59e-02	1.06e-02	5.7	5.7	2.5	2.5	-4.1	-11.0	17.5	-8.50e-02	-8.03e-02	-0.2
3315	ok	0.24	5.39e-02	1.11e-02	5.7	5.7	2.5	2.5	-5.4	-12.8	-14.4	-2.33e-02	-8.24e-02	0.2
3316	ok	0.24	4.83e-02	1.12e-02	5.7	5.7	2.5	2.5	-4.5	-14.8	10.5	-5.17e-02	7.26e-02	0.2
3317	ok	0.24	5.25e-02	1.27e-02	5.7	5.7	2.5	2.5	-4.2	-16.8	18.5	-4.64e-02	-0.1	0.3
3318	ok	0.24	6.25e-02	1.26e-02	5.7	5.7	2.5	2.5	-4.4	-16.4	15.8	-7.33e-02	-0.1	0.2
3319	ok	0.24	5.80e-02	1.35e-02	5.7	5.7	2.5	2.5	-5.4	-19.3	18.2	-4.41e-02	-0.1	0.3
3320	ok	0.24	6.76e-02	1.33e-02	5.7	5.7	2.5	2.5	-4.6	-18.6	15.4	-7.00e-02	-0.1	0.2
3321	ok	0.24	6.50e-02	1.39e-02	5.7	5.7	2.5	2.5	-5.6	-21.3	17.8	-4.54e-02	-0.1	0.3
3322	ok	0.24	7.39e-02	1.37e-02	5.7	5.7	2.5	2.5	-4.7	-20.5	15.0	-6.77e-02	-0.1	0.2
3323	ok	0.24	7.07e-02	1.42e-02	5.7	5.7	2.5	2.5	-5.7	-22.4	17.4	-4.01e-02	-0.1	0.3
3324	ok	0.24	7.89e-02	1.39e-02	5.7	5.7	2.5	2.5	-4.7	-21.6	14.7	-6.11e-02	-0.1	0.2
3325	ok	0.24	7.37e-02	1.42e-02	5.7	5.7	2.5	2.5	-5.8	-22.8	17.2	-3.01e-02	-9.78e-02	0.3
3326	ok	0.24	8.19e-02	1.38e-02	5.7	5.7	2.5	2.5	-4.7	-21.8	14.3	-5.64e-02	-0.1	0.2
3327	ok	0.24	7.65e-02	1.40e-02	5.7	5.7	2.5	2.5	-5.8	-22.2	17.1	-2.62e-02	-9.22e-02	0.3
3328	ok	0.24	8.28e-02	1.34e-02	5.7	5.7	2.5	2.5	-4.6	-21.2	14.2	-5.68e-02	-0.1	0.2
3329	ok	0.24	7.69e-02	1.34e-02	5.7	5.7	2.5	2.5	-5.8	-20.5	17.0	-3.31e-02	-9.31e-02	0.3
3330	ok	0.24	8.22e-02	1.26e-02	5.7	5.7	2.5	2.5	-4.6	-19.4	14.1	-6.34e-02	-9.88e-02	0.2
3331	ok	0.24	7.66e-02	1.24e-02	5.7	5.7	2.5	2.5	-5.8	-17.6	16.7	-3.74e-02	-9.23e-02	0.3
3332	ok	0.24	8.03e-02	1.12e-02	5.7	5.7	2.5	2.5	-4.6	-16.2	13.8	-6.61e-02	-9.39e-02	0.2
3333	ok	0.24	7.49e-02	1.07e-02	5.7	5.7	2.5	2.5	-6.0	-12.3	16.0	-3.85e-02	-8.58e-02	0.2
3334	ok	0.24	7.42e-02	8.92e-03	5.7	5.7	2.5	2.5	-4.9	-10.7	13.1	-7.92e-02	-8.28e-02	0.2
3335	ok	0.24	6.66e-02	7.76e-03	5.7	5.7	2.5	2.5	-6.5	-6.7	12.0	-0.1	-5.13e-02	0.2
3336	ok	0.24	5.30e-02	6.62e-03	5.7	5.7	2.5	2.5	-10.1	-2.3	9.2	-0.4	-8.50e-02	0.1

Nodo	**x/d**	**V N/M**	**ver. rid**	**Af pr-**	**Af pr+**	**Af sec-**	**Af sec+**	**N z**	**N o**	**N zo**	**M z**	**M o**	**M zo**
								-129.70	-24.01	-34.24	-1.61	-0.36	-0.29
	0.24	0.14	0.06	5.65	5.65	2.51	2.51	-3.02	-0.36	34.23	0.23	0.31	0.29

Nodo	**Stato**	**Max tau** kN/ m2	**Ver V pr**	**Ver V sec**	**Af V pr**	**Af V sec**	**V pr** kN/ m	**V sec** kN/ m
519	ok	1.60						
520	ok	0.34						
521	ok	0.85						
522	ok	0.33						
523	ok	0.83						
524	ok	0.35						
525	ok	0.84						
526	ok	0.35						
527	ok	0.83						
528	ok	0.36						
529	ok	0.83						
530	ok	0.35						
531	ok	0.84						
532	ok	0.35						
533	ok	0.85						
534	ok	0.36						
535	ok	0.86						
536	ok	0.36						
537	ok	0.85						
538	ok	0.36						
539	ok	0.83						
540	ok	0.36						
541	ok	0.82						
542	ok	0.36						
543	ok	0.83						
544	ok	0.36						
545	ok	0.85						
546	ok	0.36						
547	ok	0.86						
548	ok	0.36						
549	ok	0.86						
550	ok	0.36						
551	ok	0.84						
552	ok	0.36						
553	ok	0.82						
554	ok	0.36						
555	ok	0.83						
556	ok	0.35						
557	ok	0.84						
558	ok	0.35						

559	ok	0.83
560	ok	0.33
561	ok	0.85
562	ok	0.34
563	ok	1.61
732	ok	0.88
733	ok	0.37
734	ok	0.45
735	ok	0.29
736	ok	0.41
737	ok	0.28
738	ok	0.41
739	ok	0.26
740	ok	0.41
741	ok	0.26
742	ok	0.40
743	ok	0.26
744	ok	0.40
745	ok	0.26
746	ok	0.40
747	ok	0.26
748	ok	0.40
749	ok	0.26
750	ok	0.39
751	ok	0.26
752	ok	0.38
753	ok	0.26
754	ok	0.38
755	ok	0.26
756	ok	0.39
757	ok	0.26
758	ok	0.39
759	ok	0.26
760	ok	0.40
761	ok	0.26
762	ok	0.40
763	ok	0.26
764	ok	0.41
765	ok	0.26
766	ok	0.41
767	ok	0.26
768	ok	0.41
769	ok	0.26
770	ok	0.41
771	ok	0.28
772	ok	0.42
773	ok	0.29
774	ok	0.46
775	ok	0.37
776	ok	0.89
897	ok	0.36
898	ok	0.16
899	ok	0.08
900	ok	0.10
901	ok	0.07
902	ok	0.10
903	ok	0.07
904	ok	0.10
905	ok	0.08
906	ok	0.11
907	ok	0.08
908	ok	0.11
909	ok	0.07
910	ok	0.11
911	ok	0.07
912	ok	0.11
913	ok	0.07
914	ok	0.11
915	ok	0.06
916	ok	0.11
917	ok	0.06
918	ok	0.11
919	ok	0.06
920	ok	0.11
921	ok	0.06
922	ok	0.11
923	ok	0.06
924	ok	0.11

925	ok	0.07
926	ok	0.11
927	ok	0.07
928	ok	0.11
929	ok	0.07
930	ok	0.11
931	ok	0.08
932	ok	0.11
933	ok	0.07
934	ok	0.10
935	ok	0.07
936	ok	0.10
937	ok	0.07
938	ok	0.10
939	ok	0.09
940	ok	0.16
941	ok	0.36
1172	ok	0.41
1173	ok	0.16
1174	ok	0.21
1175	ok	0.10
1176	ok	0.19
1177	ok	0.10
1178	ok	0.18
1179	ok	0.10
1180	ok	0.18
1181	ok	0.10
1182	ok	0.17
1183	ok	0.10
1184	ok	0.17
1185	ok	0.10
1186	ok	0.17
1187	ok	0.10
1188	ok	0.17
1189	ok	0.10
1190	ok	0.17
1191	ok	0.10
1192	ok	0.16
1193	ok	0.10
1194	ok	0.16
1195	ok	0.10
1196	ok	0.16
1197	ok	0.10
1198	ok	0.17
1199	ok	0.10
1200	ok	0.17
1201	ok	0.10
1202	ok	0.17
1203	ok	0.10
1204	ok	0.17
1205	ok	0.10
1206	ok	0.17
1207	ok	0.10
1208	ok	0.18
1209	ok	0.10
1210	ok	0.18
1211	ok	0.10
1212	ok	0.19
1213	ok	0.10
1214	ok	0.21
1215	ok	0.16
1216	ok	0.41
1337	ok	0.31
1338	ok	0.11
1339	ok	0.10
1340	ok	0.11
1341	ok	0.10
1342	ok	0.10
1343	ok	0.10
1344	ok	0.10
1345	ok	0.09
1346	ok	0.10
1347	ok	0.09
1348	ok	0.10
1349	ok	0.09
1350	ok	0.10
1351	ok	0.09
1352	ok	0.10

1353	ok	0.09
1354	ok	0.10
1355	ok	0.09
1356	ok	0.10
1357	ok	0.09
1358	ok	0.10
1359	ok	0.09
1360	ok	0.10
1361	ok	0.09
1362	ok	0.10
1363	ok	0.09
1364	ok	0.10
1365	ok	0.09
1366	ok	0.10
1367	ok	0.09
1368	ok	0.10
1369	ok	0.09
1370	ok	0.10
1371	ok	0.09
1372	ok	0.10
1373	ok	0.09
1374	ok	0.10
1375	ok	0.10
1376	ok	0.10
1377	ok	0.10
1378	ok	0.11
1379	ok	0.10
1380	ok	0.11
1381	ok	0.31
1502	ok	0.33
1503	ok	0.07
1504	ok	0.06
1505	ok	0.04
1506	ok	0.05
1507	ok	0.04
1508	ok	0.04
1509	ok	0.04
1510	ok	0.04
1511	ok	0.04
1512	ok	0.04
1513	ok	0.04
1514	ok	0.04
1515	ok	0.04
1516	ok	0.04
1517	ok	0.04
1518	ok	0.04
1519	ok	0.04
1520	ok	0.04
1521	ok	0.04
1522	ok	0.04
1523	ok	0.04
1524	ok	0.03
1525	ok	0.04
1526	ok	0.04
1527	ok	0.04
1528	ok	0.04
1529	ok	0.04
1530	ok	0.04
1531	ok	0.04
1532	ok	0.04
1533	ok	0.04
1534	ok	0.04
1535	ok	0.04
1536	ok	0.04
1537	ok	0.04
1538	ok	0.04
1539	ok	0.04
1540	ok	0.04
1541	ok	0.04
1542	ok	0.05
1543	ok	0.04
1544	ok	0.06
1545	ok	0.07
1546	ok	0.33
1777	ok	0.37
1778	ok	0.08
1779	ok	0.14
1780	ok	0.08

1781	ok	0.12
1782	ok	0.08
1783	ok	0.11
1784	ok	0.07
1785	ok	0.11
1786	ok	0.07
1787	ok	0.10
1788	ok	0.07
1789	ok	0.10
1790	ok	0.06
1791	ok	0.10
1792	ok	0.06
1793	ok	0.10
1794	ok	0.06
1795	ok	0.10
1796	ok	0.06
1797	ok	0.10
1798	ok	0.06
1799	ok	0.09
1800	ok	0.06
1801	ok	0.10
1802	ok	0.06
1803	ok	0.10
1804	ok	0.06
1805	ok	0.10
1806	ok	0.06
1807	ok	0.10
1808	ok	0.07
1809	ok	0.10
1810	ok	0.07
1811	ok	0.10
1812	ok	0.07
1813	ok	0.11
1814	ok	0.07
1815	ok	0.11
1816	ok	0.08
1817	ok	0.12
1818	ok	0.08
1819	ok	0.14
1820	ok	0.08
1821	ok	0.37
1942	ok	0.30
1943	ok	0.08
1944	ok	0.08
1945	ok	0.07
1946	ok	0.07
1947	ok	0.07
1948	ok	0.07
1949	ok	0.07
1950	ok	0.07
1951	ok	0.07
1952	ok	0.07
1953	ok	0.07
1954	ok	0.06
1955	ok	0.06
1956	ok	0.07
1957	ok	0.06
1958	ok	0.07
1959	ok	0.06
1960	ok	0.06
1961	ok	0.06
1962	ok	0.06
1963	ok	0.06
1964	ok	0.06
1965	ok	0.06
1966	ok	0.06
1967	ok	0.06
1968	ok	0.06
1969	ok	0.06
1970	ok	0.07
1971	ok	0.06
1972	ok	0.07
1973	ok	0.06
1974	ok	0.06
1975	ok	0.07
1976	ok	0.07
1977	ok	0.07
1978	ok	0.07

1979	ok	0.07
1980	ok	0.07
1981	ok	0.07
1982	ok	0.07
1983	ok	0.07
1984	ok	0.08
1985	ok	0.08
1986	ok	0.30
2107	ok	0.33
2108	ok	0.07
2109	ok	0.07
2110	ok	0.06
2111	ok	0.06
2112	ok	0.05
2113	ok	0.05
2114	ok	0.05
2115	ok	0.05
2116	ok	0.05
2117	ok	0.05
2118	ok	0.05
2119	ok	0.05
2120	ok	0.05
2121	ok	0.05
2122	ok	0.05
2123	ok	0.05
2124	ok	0.05
2125	ok	0.05
2126	ok	0.05
2127	ok	0.05
2128	ok	0.05
2129	ok	0.05
2130	ok	0.05
2131	ok	0.05
2132	ok	0.05
2133	ok	0.05
2134	ok	0.05
2135	ok	0.05
2136	ok	0.05
2137	ok	0.05
2138	ok	0.05
2139	ok	0.05
2140	ok	0.05
2141	ok	0.05
2142	ok	0.05
2143	ok	0.05
2144	ok	0.05
2145	ok	0.05
2146	ok	0.05
2147	ok	0.06
2148	ok	0.06
2149	ok	0.07
2150	ok	0.07
2151	ok	0.33
2382	ok	0.35
2383	ok	0.08
2384	ok	0.07
2385	ok	0.05
2386	ok	0.06
2387	ok	0.04
2388	ok	0.05
2389	ok	0.04
2390	ok	0.04
2391	ok	0.04
2392	ok	0.04
2393	ok	0.04
2394	ok	0.04
2395	ok	0.04
2396	ok	0.04
2397	ok	0.04
2398	ok	0.04
2399	ok	0.04
2400	ok	0.04
2401	ok	0.04
2402	ok	0.04
2403	ok	0.04
2404	ok	0.04
2405	ok	0.04
2406	ok	0.04

2407	ok	0.04
2408	ok	0.04
2409	ok	0.03
2410	ok	0.04
2411	ok	0.04
2412	ok	0.04
2413	ok	0.04
2414	ok	0.04
2415	ok	0.04
2416	ok	0.04
2417	ok	0.04
2418	ok	0.04
2419	ok	0.04
2420	ok	0.05
2421	ok	0.04
2422	ok	0.06
2423	ok	0.05
2424	ok	0.07
2425	ok	0.08
2426	ok	0.35
2552	ok	0.26
2553	ok	0.06
2554	ok	0.04
2555	ok	0.03
2556	ok	0.04
2557	ok	0.04
2558	ok	0.03
2559	ok	0.04
2560	ok	0.03
2561	ok	0.04
2562	ok	0.03
2563	ok	0.04
2564	ok	0.03
2565	ok	0.04
2566	ok	0.03
2567	ok	0.04
2568	ok	0.03
2569	ok	0.03
2570	ok	0.03
2571	ok	0.03
2572	ok	0.03
2573	ok	0.03
2574	ok	0.03
2575	ok	0.03
2576	ok	0.03
2577	ok	0.03
2578	ok	0.03
2579	ok	0.03
2580	ok	0.03
2581	ok	0.04
2582	ok	0.03
2583	ok	0.04
2584	ok	0.03
2585	ok	0.04
2586	ok	0.03
2587	ok	0.04
2588	ok	0.03
2589	ok	0.04
2590	ok	0.03
2591	ok	0.04
2592	ok	0.04
2593	ok	0.03
2594	ok	0.04
2595	ok	0.07
2596	ok	0.26
2870	ok	0.31
2871	ok	0.13
2872	ok	0.08
2873	ok	0.09
2874	ok	0.10
2875	ok	0.09
2876	ok	0.10
2877	ok	0.09
2878	ok	0.10
2879	ok	0.09
2880	ok	0.10
2881	ok	0.09
2882	ok	0.10

2883	ok	0.09
2884	ok	0.10
2885	ok	0.08
2886	ok	0.10
2887	ok	0.08
2888	ok	0.09
2889	ok	0.07
2890	ok	0.09
2891	ok	0.07
2892	ok	0.08
2893	ok	0.07
2894	ok	0.09
2895	ok	0.07
2896	ok	0.09
2897	ok	0.08
2898	ok	0.10
2899	ok	0.08
2900	ok	0.10
2901	ok	0.09
2902	ok	0.10
2903	ok	0.09
2904	ok	0.10
2905	ok	0.09
2906	ok	0.11
2907	ok	0.09
2908	ok	0.11
2909	ok	0.09
2910	ok	0.10
2911	ok	0.09
2912	ok	0.08
2913	ok	0.13
2914	ok	0.31
3292	ok	0.40
3293	ok	0.24
3294	ok	0.23
3295	ok	0.24
3296	ok	0.25
3297	ok	0.24
3298	ok	0.25
3299	ok	0.24
3300	ok	0.25
3301	ok	0.24
3302	ok	0.25
3303	ok	0.24
3304	ok	0.26
3305	ok	0.25
3306	ok	0.26
3307	ok	0.25
3308	ok	0.26
3309	ok	0.25
3310	ok	0.26
3311	ok	0.26
3312	ok	0.25
3313	ok	0.25
3314	ok	0.25
3315	ok	0.25
3316	ok	0.25
3317	ok	0.25
3318	ok	0.26
3319	ok	0.25
3320	ok	0.26
3321	ok	0.25
3322	ok	0.27
3323	ok	0.25
3324	ok	0.26
3325	ok	0.24
3326	ok	0.26
3327	ok	0.24
3328	ok	0.26
3329	ok	0.24
3330	ok	0.26
3331	ok	0.24
3332	ok	0.26
3333	ok	0.24
3334	ok	0.24
3335	ok	0.24
3336	ok	0.40

Nodo	Max tau	Ver V pr	Ver V sec	Af V pr	Af V sec	V pr	V sec
	1.61						

Macro Guscio	Spessore	Id Materiale	Id Criterio	Progettazione
	cm			
1	40.00	1	2	Singolo elemento

Nodo	Stato	x/d	V N/M	ver. rid	Af pr-	Af pr+	Af sec-	Af sec+	N x	N y	N xy	M x	M y	M xy
									kN/ m	kN/ m	kN/ m	kN	kN	kN
1	ok	0.09	5.38e-02	2.68e-04	7.7	7.7	7.7	7.7	1.0	0.5	-7.65e-02	-4.9	-1.5	-1.1
2	ok	0.09	0.1	5.93e-04	7.7	7.7	7.7	7.7	0.8	-2.4	1.4	-5.9	-6.0	3.7
3	ok	0.09	8.79e-02	4.90e-04	7.7	7.7	7.7	7.7	-2.1	-1.1	-0.5	9.1	0.4	0.3
4	ok	0.09	0.1	1.02e-03	7.7	7.7	7.7	7.7	1.0	-1.0	-1.1	11.4	-0.2	1.8
5	ok	0.09	0.1	1.43e-03	7.7	7.7	7.7	7.7	-3.37e-03	-1.4	-1.1	12.8	-0.3	1.3
6	ok	0.09	0.1	1.85e-03	7.7	7.7	7.7	7.7	-7.7	-1.1	-1.8	13.1	0.3	-1.8
7	ok	0.09	0.1	2.23e-03	7.7	7.7	7.7	7.7	-9.8	-1.0	-1.9	12.0	0.2	-2.9
8	ok	0.09	0.1	2.55e-03	7.7	7.7	7.7	7.7	-11.6	-1.0	-1.8	9.7	0.2	-3.8
9	ok	0.09	7.68e-02	2.83e-03	7.7	7.7	7.7	7.7	-13.2	-1.0	-1.6	6.1	0.1	-4.5
10	ok	0.09	7.96e-02	3.28e-03	7.7	7.7	7.7	7.7	9.3	0.4	-2.1	-4.0	-1.7	-4.0
11	ok	0.09	0.2	3.60e-03	7.7	7.7	7.7	7.7	-4.2	-1.8	-0.3	-17.0	-3.0	2.6
12	ok	0.09	0.2	2.42e-03	7.7	7.7	7.7	7.7	-3.8	-1.4	1.0	-19.7	-5.2	5.0
13	ok	0.09	0.2	3.87e-03	7.7	7.7	7.7	7.7	-4.1	-2.2	0.6	-14.7	-2.2	0.4
14	ok	0.09	8.36e-02	3.77e-03	7.7	7.7	7.7	7.7	-19.6	1.2	2.4	-5.5	-1.3	6.0
15	ok	0.09	8.94e-02	3.13e-03	7.7	7.7	7.7	7.7	-8.7	-1.7	0.4	3.9	-0.8	4.7
16	ok	0.09	0.1	2.79e-03	7.7	7.7	7.7	7.7	-7.8	-1.4	0.3	6.9	-0.8	4.1
17	ok	0.09	0.1	2.48e-03	7.7	7.7	7.7	7.7	-3.0	-1.4	0.3	8.6	-0.8	3.2
18	ok	0.09	0.1	2.18e-03	7.7	7.7	7.7	7.7	9.8	0.3	-1.2	8.0	-0.3	-4.8
19	ok	0.09	0.1	1.87e-03	7.7	7.7	7.7	7.7	8.0	0.2	-1.2	7.1	-0.3	-5.4
20	ok	0.09	9.83e-02	1.57e-03	7.7	7.7	7.7	7.7	3.9	-1.0	-0.2	7.0	-0.7	-4.0
21	ok	0.09	7.92e-02	1.28e-03	7.7	7.7	7.7	7.7	2.7	-1.0	-0.3	3.8	-0.7	-4.6
22	ok	0.09	9.54e-02	1.01e-03	7.7	7.7	7.7	7.7	1.4	-0.5	-1.3	-6.1	-2.0	-5.1
23	ok	0.09	0.2	1.11e-03	7.7	7.7	7.7	7.7	1.3	-1.2	-0.1	-16.7	-2.9	2.6
24	ok	0.09	0.2	5.90e-04	7.7	7.7	7.7	7.7	1.5	-1.4	3.16e-02	-21.3	-4.8	-4.3
25	ok	0.09	0.2	9.54e-04	7.7	7.7	7.7	7.7	1.5	-0.9	2.36e-02	-16.0	-2.7	-2.7
26	ok	0.09	9.53e-02	9.40e-04	7.7	7.7	7.7	7.7	-1.3	0.3	1.8	-5.3	-1.3	6.3
27	ok	0.09	8.11e-02	1.24e-03	7.7	7.7	7.7	7.7	3.2	-1.0	0.3	3.9	-0.7	4.7
28	ok	0.09	9.97e-02	1.55e-03	7.7	7.7	7.7	7.7	4.3	-1.0	0.2	7.1	-0.7	4.0
29	ok	0.09	0.1	1.86e-03	7.7	7.7	7.7	7.7	8.5	0.2	1.2	7.1	-0.3	5.4
30	ok	0.09	0.1	2.17e-03	7.7	7.7	7.7	7.7	10.3	0.3	1.2	8.0	-0.3	4.8
31	ok	0.09	0.1	2.49e-03	7.7	7.7	7.7	7.7	-7.5	-1.7	-0.3	7.9	-0.9	-3.6
32	ok	0.09	0.1	2.80e-03	7.7	7.7	7.7	7.7	-7.7	-1.4	-0.3	6.8	-0.8	-4.0
33	ok	0.09	9.02e-02	3.15e-03	7.7	7.7	7.7	7.7	-8.7	-1.7	-0.4	3.8	-0.8	-4.7
34	ok	0.09	8.41e-02	3.80e-03	7.7	7.7	7.7	7.7	-19.8	1.2	-2.4	-5.7	-1.4	-5.9
35	ok	0.09	0.2	3.91e-03	7.7	7.7	7.7	7.7	8.0	1.32e-02	0.3	-13.9	-2.5	2.3
36	ok	0.09	0.2	2.42e-03	7.7	7.7	7.7	7.7	-3.8	-1.4	-0.7	-19.8	-5.2	-4.9
37	ok	0.09	0.2	3.48e-03	7.7	7.7	7.7	7.7	-4.2	-1.6	0.2	-16.6	-2.9	-2.6
38	ok	0.09	8.01e-02	3.21e-03	7.7	7.7	7.7	7.7	10.0	0.3	2.1	-3.8	-1.7	4.0
39	ok	0.09	7.82e-02	2.78e-03	7.7	7.7	7.7	7.7	-12.8	-1.0	1.6	6.2	0.1	4.5
40	ok	0.09	0.1	2.52e-03	7.7	7.7	7.7	7.7	-11.3	-1.0	1.8	9.8	0.2	3.8
41	ok	0.09	0.1	2.21e-03	7.7	7.7	7.7	7.7	-9.6	-1.0	1.9	12.0	0.2	2.9
42	ok	0.09	0.1	1.84e-03	7.7	7.7	7.7	7.7	-7.6	-1.1	1.8	13.2	0.3	1.9
43	ok	0.09	0.1	1.43e-03	7.7	7.7	7.7	7.7	0.2	-1.4	1.1	12.8	-0.3	-1.3
44	ok	0.09	0.1	1.03e-03	7.7	7.7	7.7	7.7	1.1	-1.1	1.1	11.4	-0.2	-1.8
45	ok	0.09	8.86e-02	5.14e-04	7.7	7.7	7.7	7.7	-2.3	-0.6	0.6	8.0	0.2	0.9
46	ok	0.09	0.1	5.94e-04	7.7	7.7	7.7	7.7	0.8	-2.4	-1.4	-6.0	-6.0	-3.7
47	ok	0.09	5.46e-02	2.69e-04	7.7	7.7	7.7	7.7	0.5	0.1	0.2	0.8	-2.2	2.1
48	ok	0.09	7.25e-02	5.36e-04	7.7	7.7	7.7	7.7	1.0	-0.8	-0.8	2.6	-7.2	-1.4
49	ok	0.09	0.2	1.09e-03	7.7	7.7	7.7	7.7	-0.6	-2.6	-0.6	-8.6	-13.6	6.2
50	ok	0.09	0.1	8.84e-04	7.7	7.7	7.7	7.7	5.4	1.1	0.1	12.8	1.2	3.4
51	ok	0.09	0.1	1.08e-03	7.7	7.7	7.7	7.7	1.6	-0.8	-0.4	10.2	1.0	3.7
52	ok	0.09	0.1	1.44e-03	7.7	7.7	7.7	7.7	-4.7	3.7	-3.3	10.4	4.5	-1.3
53	ok	0.09	0.1	1.65e-03	7.7	7.7	7.7	7.7	-6.3	-0.5	-3.8	10.2	4.6	-2.6
54	ok	0.09	0.1	1.81e-03	7.7	7.7	7.7	7.7	-7.7	-0.1	-3.8	9.2	4.5	-3.8
55	ok	0.09	0.1	1.97e-03	7.7	7.7	7.7	7.7	-9.0	2.82e-03	-3.7	7.4	4.0	-4.9
56	ok	0.09	9.49e-02	2.08e-03	7.7	7.7	7.7	7.7	-10.1	5.91e-03	-3.2	4.6	3.3	-5.8
57	ok	0.09	6.93e-02	2.14e-03	7.7	7.7	7.7	7.7	-0.5	-3.5	-1.7	-1.8	-2.5	-5.0
58	ok	0.09	0.2	2.06e-03	7.7	7.7	7.7	7.7	-0.2	-0.9	-0.8	-12.7	-7.6	-7.7
59	ok	0.09	0.3	2.40e-03	7.7	7.7	7.7	7.7	-0.9	-2.6	-1.7	-32.3	-20.9	-5.8
60	ok	0.09	0.2	2.44e-03	7.7	7.7	7.7	7.7	-13.8	2.3	1.7	-13.9	-5.9	8.2
61	ok	0.09	9.38e-02	2.24e-03	7.7	7.7	7.7	7.7	-6.0	-3.5	1.8	-3.5	-3.4	6.8
62	ok	0.09	9.21e-02	2.21e-03	7.7	7.7	7.7	7.7	-5.8	-3.7	1.2	2.9	-2.2	6.7
63	ok	0.09	0.1	2.03e-03	7.7	7.7	7.7	7.7	10.1	0.4	-3.5	5.8	3.3	-4.3
64	ok	0.09	0.1	1.82e-03	7.7	7.7	7.7	7.7	9.0	0.5	-3.5	6.1	3.3	-5.1

65	ok	0.09	0.1	1.61e-03	7.7	7.7	7.7	7.7	7.8	0.6	-3.3	5.8	3.3	-6.0
66	ok	0.09	0.1	1.40e-03	7.7	7.7	7.7	7.7	5.7	0.7	-3.3	5.1	3.1	-6.8
67	ok	0.09	0.1	1.25e-03	7.7	7.7	7.7	7.7	4.4	0.8	-3.3	3.5	2.8	-7.4
68	ok	0.09	9.81e-02	1.06e-03	7.7	7.7	7.7	7.7	-4.3	0.9	-3.2	1.3	2.1	-7.7
69	ok	0.09	9.95e-02	9.19e-04	7.7	7.7	7.7	7.7	0.3	-3.5	-1.2	-3.8	-3.3	-6.5
70	ok	0.09	0.2	7.32e-04	7.7	7.7	7.7	7.7	6.34e-02	-1.6	-0.4	-14.8	-8.6	-8.8
71	ok	0.09	0.4	7.41e-04	7.7	7.7	7.7	7.7	-0.3	-2.6	-1.3	-32.8	-21.7	-6.4
72	ok	0.09	0.2	7.15e-04	7.7	7.7	7.7	7.7	-1.8	1.0	1.8	-14.6	-6.0	8.8
73	ok	0.09	0.1	9.04e-04	7.7	7.7	7.7	7.7	0.7	-3.4	1.2	-3.6	-3.3	6.6
74	ok	0.09	0.1	1.05e-03	7.7	7.7	7.7	7.7	3.4	-3.5	1.0	2.9	-2.0	6.6
75	ok	0.09	0.1	1.18e-03	7.7	7.7	7.7	7.7	4.8	0.8	3.3	3.6	2.8	7.5
76	ok	0.09	0.1	1.39e-03	7.7	7.7	7.7	7.7	6.9	0.7	3.4	5.1	3.1	6.9
77	ok	0.09	0.1	1.61e-03	7.7	7.7	7.7	7.7	8.2	0.6	3.4	5.8	3.3	6.0
78	ok	0.09	0.1	1.83e-03	7.7	7.7	7.7	7.7	9.4	0.5	3.5	6.0	3.3	5.2
79	ok	0.09	0.1	2.05e-03	7.7	7.7	7.7	7.7	10.5	0.4	3.6	5.7	3.3	4.3
80	ok	0.09	9.31e-02	2.23e-03	7.7	7.7	7.7	7.7	11.3	0.2	3.6	4.8	3.0	3.6
81	ok	0.09	9.37e-02	2.26e-03	7.7	7.7	7.7	7.7	-6.0	-3.6	-1.7	-3.5	-3.4	-6.7
82	ok	0.09	0.2	2.48e-03	7.7	7.7	7.7	7.7	-6.7	-1.5	-0.7	-14.0	-8.5	-8.7
83	ok	0.09	0.3	2.43e-03	7.7	7.7	7.7	7.7	-0.3	-2.5	1.4	-31.4	-20.7	5.5
84	ok	0.09	0.2	1.99e-03	7.7	7.7	7.7	7.7	0.1	-0.4	1.9	-7.6	-6.1	4.7
85	ok	0.09	7.01e-02	2.10e-03	7.7	7.7	7.7	7.7	-9.31e-02	-3.4	1.8	-1.7	-2.4	5.0
86	ok	0.09	9.58e-02	2.05e-03	7.7	7.7	7.7	7.7	-9.9	1.01e-02	3.3	4.6	3.3	5.8
87	ok	0.09	0.1	1.94e-03	7.7	7.7	7.7	7.7	-8.8	3.49e-03	3.7	7.4	4.0	4.9
88	ok	0.09	0.1	1.79e-03	7.7	7.7	7.7	7.7	-7.6	-0.1	3.9	9.2	4.5	3.8
89	ok	0.09	0.1	1.64e-03	7.7	7.7	7.7	7.7	-6.2	-0.4	3.9	10.3	4.6	2.6
90	ok	0.09	0.1	1.45e-03	7.7	7.7	7.7	7.7	-4.7	3.7	3.4	10.5	4.5	1.3
91	ok	0.09	0.1	1.07e-03	7.7	7.7	7.7	7.7	1.7	-0.3	0.5	10.2	1.0	-3.7
92	ok	0.09	0.1	8.97e-04	7.7	7.7	7.7	7.7	5.6	4.1	1.3	13.4	3.8	0.5
93	ok	0.09	0.2	1.09e-03	7.7	7.7	7.7	7.7	-0.6	-2.7	0.7	-8.7	-13.6	-6.2
94	ok	0.09	7.25e-02	5.37e-04	7.7	7.7	7.7	7.7	-1.1	0.2	-8.85e-02	-9.11e-02	-4.3	-3.6
95	ok	0.09	0.1	1.37e-03	7.7	7.7	7.7	7.7	0.5	1.4	-0.5	1.8	10.8	-9.61e-02
96	ok	0.09	0.1	1.78e-03	7.7	7.7	7.7	7.7	-1.4	-8.9	1.7	-2.8	-6.9	6.3
97	ok	0.09	0.1	2.02e-03	7.7	7.7	7.7	7.7	-2.2	7.9	-5.1	7.0	8.4	1.8
98	ok	0.09	0.1	1.92e-03	7.7	7.7	7.7	7.7	-3.99e-02	9.1	-1.8	6.5	13.1	-8.37e-02
99	ok	0.09	0.2	1.86e-03	7.7	7.7	7.7	7.7	-0.2	9.0	-2.1	7.3	13.5	-0.9
100	ok	0.09	0.2	1.84e-03	7.7	7.7	7.7	7.7	-0.3	7.1	-2.2	7.3	13.8	-1.7
101	ok	0.09	0.2	1.85e-03	7.7	7.7	7.7	7.7	-0.4	7.2	-2.1	6.8	13.6	-2.3
102	ok	0.09	0.2	1.88e-03	7.7	7.7	7.7	7.7	-0.6	7.1	-1.9	5.6	13.4	-2.9
103	ok	0.09	0.2	1.89e-03	7.7	7.7	7.7	7.7	-0.5	6.8	-0.5	4.4	12.8	-3.5
104	ok	0.09	0.1	1.91e-03	7.7	7.7	7.7	7.7	-0.5	6.3	-0.7	2.5	12.3	-3.2
105	ok	0.09	0.1	1.91e-03	7.7	7.7	7.7	7.7	-0.5	-5.5	-1.3	-8.8	-5.0	-2.9
106	ok	0.09	0.1	1.79e-03	7.7	7.7	7.7	7.7	-5.2	-4.8	1.8	-13.2	-6.2	3.1
107	ok	0.09	0.1	1.88e-03	7.7	7.7	7.7	7.7	-4.7	-4.8	2.6	-8.2	-5.8	6.9
108	ok	0.09	0.1	1.93e-03	7.7	7.7	7.7	7.7	-4.8	-5.4	2.3	-4.6	-6.8	7.2
109	ok	0.09	0.1	1.84e-03	7.7	7.7	7.7	7.7	5.3	6.5	-2.6	4.8	12.4	-1.4
110	ok	0.09	0.1	1.80e-03	7.7	7.7	7.7	7.7	5.1	6.6	-2.4	5.3	12.9	-2.0
111	ok	0.09	0.1	1.72e-03	7.7	7.7	7.7	7.7	4.9	6.7	-2.1	5.5	12.8	-2.5
112	ok	0.09	0.2	1.64e-03	7.7	7.7	7.7	7.7	4.5	6.7	-1.3	5.6	12.9	-3.1
113	ok	0.09	0.2	1.53e-03	7.7	7.7	7.7	7.7	1.1	6.6	-1.1	5.1	12.5	-3.5
114	ok	0.09	0.2	1.42e-03	7.7	7.7	7.7	7.7	1.2	6.5	-0.7	4.2	12.4	-3.9
115	ok	0.09	0.1	1.28e-03	7.7	7.7	7.7	7.7	-0.7	6.3	-0.7	2.5	11.7	-4.5
116	ok	0.09	0.1	1.19e-03	7.7	7.7	7.7	7.7	1.3	-5.4	-1.8	-4.8	-6.5	-7.0
117	ok	0.09	0.1	1.16e-03	7.7	7.7	7.7	7.7	1.2	-4.8	-2.0	-8.5	-5.6	-6.4
118	ok	0.09	0.1	1.16e-03	7.7	7.7	7.7	7.7	-2.07e-02	-4.3	0.9	-12.9	-5.9	2.7
119	ok	0.09	0.1	1.14e-03	7.7	7.7	7.7	7.7	1.6	-4.8	2.2	-8.3	-5.5	6.7
120	ok	0.09	0.1	1.19e-03	7.7	7.7	7.7	7.7	1.5	-5.3	2.0	-4.6	-6.5	7.1
121	ok	0.09	0.1	1.33e-03	7.7	7.7	7.7	7.7	1.3	6.3	0.8	2.6	11.7	4.6
122	ok	0.09	0.2	1.43e-03	7.7	7.7	7.7	7.7	1.4	6.5	0.8	4.2	12.5	3.9
123	ok	0.09	0.2	1.54e-03	7.7	7.7	7.7	7.7	4.2	6.7	1.2	5.1	12.5	3.6
124	ok	0.09	0.2	1.65e-03	7.7	7.7	7.7	7.7	4.7	6.7	1.5	5.5	12.9	3.1
125	ok	0.09	0.1	1.74e-03	7.7	7.7	7.7	7.7	5.1	6.7	2.0	5.4	12.7	2.5
126	ok	0.09	0.1	1.81e-03	7.7	7.7	7.7	7.7	5.3	6.7	2.4	5.2	12.8	2.0
127	ok	0.09	0.1	1.86e-03	7.7	7.7	7.7	7.7	5.4	6.5	2.6	4.8	12.4	1.5
128	ok	0.09	0.1	1.95e-03	7.7	7.7	7.7	7.7	-4.7	-5.5	-2.2	-4.7	-6.8	-7.1
129	ok	0.09	0.1	1.89e-03	7.7	7.7	7.7	7.7	-4.6	-4.9	-2.5	-8.2	-5.8	-6.8
130	ok	0.09	0.1	1.70e-03	7.7	7.7	7.7	7.7	-4.8	-4.7	-1.5	-12.9	-6.3	-2.9
131	ok	0.09	0.1	1.89e-03	7.7	7.7	7.7	7.7	7.05e-02	-4.5	2.7	-6.8	-4.3	5.2
132	ok	0.09	0.1	1.90e-03	7.7	7.7	7.7	7.7	-0.2	6.3	0.9	2.6	12.3	3.2
133	ok	0.09	0.2	1.88e-03	7.7	7.7	7.7	7.7	-0.3	6.7	0.6	4.4	12.8	3.5
134	ok	0.09	0.2	1.88e-03	7.7	7.7	7.7	7.7	-0.4	7.0	2.0	5.6	13.4	2.9
135	ok	0.09	0.2	1.85e-03	7.7	7.7	7.7	7.7	-0.3	7.2	2.2	6.7	13.6	2.3
136	ok	0.09	0.2	1.86e-03	7.7	7.7	7.7	7.7	-0.2	7.1	2.3	7.3	13.8	1.7
137	ok	0.09	0.2	1.84e-03	7.7	7.7	7.7	7.7	-0.2	9.0	2.2	7.3	13.5	0.9
138	ok	0.09	0.1	1.90e-03	7.7	7.7	7.7	7.7	1.46e-03	9.1	1.9	6.5	13.1	6.90e-02
139	ok	0.09	0.1	2.00e-03	7.7	7.7	7.7	7.7	0.4	8.4	2.1	4.4	11.8	-0.9
140	ok	0.09	0.1	1.77e-03	7.7	7.7	7.7	7.7	-1.3	-8.8	-1.6	-2.9	-6.9	-6.3
141	ok	0.09	0.1	1.38e-03	7.7	7.7	7.7	7.7	0.3	-3.0	-0.3	-1.8	-5.8	-2.1
142	ok	0.09	0.3	2.53e-03	7.7	7.7	7.7	7.7	-0.3	7.5	-0.6	1.2	24.0	-0.2

143	ok	0.09	0.2	3.02e-03	7.7	7.7	7.7	7.7	-6.61e-02	12.4	-2.9	3.3	22.6	1.0
144	ok	0.09	0.2	2.97e-03	7.7	7.7	7.7	7.7	-4.37e-02	12.8	-3.7	5.5	22.8	1.0
145	ok	0.09	0.2	2.68e-03	7.7	7.7	7.7	7.7	3.29e-02	12.4	-3.2	6.6	21.9	0.3
146	ok	0.09	0.2	2.52e-03	7.7	7.7	7.7	7.7	0.3	12.2	-3.4	7.4	22.5	-0.8
147	ok	0.09	0.2	2.21e-03	7.7	7.7	7.7	7.7	0.5	9.8	-3.4	7.4	21.9	-1.5
148	ok	0.09	0.2	2.11e-03	7.7	7.7	7.7	7.7	0.7	9.9	-3.1	7.0	22.3	-2.4
149	ok	0.09	0.2	2.00e-03	7.7	7.7	7.7	7.7	1.3	9.9	-2.7	6.3	21.5	-3.0
150	ok	0.09	0.2	2.01e-03	7.7	7.7	7.7	7.7	1.5	9.7	-1.8	5.4	21.8	-3.5
151	ok	0.09	0.2	2.00e-03	7.7	7.7	7.7	7.7	1.8	9.3	-1.4	4.1	21.1	-3.9
152	ok	0.09	0.2	1.98e-03	7.7	7.7	7.7	7.7	2.1	9.3	-1.6	2.2	21.8	-3.4
153	ok	0.09	0.2	1.95e-03	7.7	7.7	7.7	7.7	2.7	9.8	-3.2	1.5	20.9	-2.1
154	ok	0.09	0.2	1.88e-03	7.7	7.7	7.7	7.7	-4.62e-02	-7.6	3.1	-8.0	-13.0	4.9
155	ok	0.09	0.2	1.90e-03	7.7	7.7	7.7	7.7	2.8	8.4	1.3	2.9	19.0	4.6
156	ok	0.09	0.2	1.93e-03	7.7	7.7	7.7	7.7	2.9	8.5	1.1	3.9	19.6	4.3
157	ok	0.09	0.2	1.93e-03	7.7	7.7	7.7	7.7	3.1	9.2	-3.2	5.9	20.2	-1.8
158	ok	0.09	0.2	1.91e-03	7.7	7.7	7.7	7.7	3.2	9.2	-2.3	6.0	20.7	-2.6
159	ok	0.09	0.2	1.83e-03	7.7	7.7	7.7	7.7	3.4	9.2	-1.9	5.8	20.1	-3.0
160	ok	0.09	0.2	1.78e-03	7.7	7.7	7.7	7.7	3.3	9.0	-1.6	5.5	20.5	-3.7
161	ok	0.09	0.2	1.67e-03	7.7	7.7	7.7	7.7	3.6	9.0	-1.4	5.0	19.8	-4.0
162	ok	0.09	0.2	1.61e-03	7.7	7.7	7.7	7.7	3.7	8.8	-1.2	4.3	20.2	-4.4
163	ok	0.09	0.2	1.52e-03	7.7	7.7	7.7	7.7	3.8	8.6	-1.1	3.2	19.7	-4.6
164	ok	0.09	0.2	1.49e-03	7.7	7.7	7.7	7.7	3.8	8.6	-1.3	1.4	20.5	-4.0
165	ok	0.09	0.2	1.47e-03	7.7	7.7	7.7	7.7	1.0	-7.7	2.0	-8.8	-11.6	2.8
166	ok	0.09	0.2	1.51e-03	7.7	7.7	7.7	7.7	3.8	8.6	1.4	1.4	20.5	4.1
167	ok	0.09	0.2	1.53e-03	7.7	7.7	7.7	7.7	3.9	8.6	1.3	3.2	19.6	4.7
168	ok	0.09	0.2	1.62e-03	7.7	7.7	7.7	7.7	3.8	8.9	1.4	4.3	20.2	4.4
169	ok	0.09	0.2	1.68e-03	7.7	7.7	7.7	7.7	3.8	9.0	1.6	5.0	19.7	4.1
170	ok	0.09	0.2	1.79e-03	7.7	7.7	7.7	7.7	3.4	9.0	1.8	5.5	20.5	3.7
171	ok	0.09	0.2	1.84e-03	7.7	7.7	7.7	7.7	3.5	9.2	2.1	5.8	20.0	3.0
172	ok	0.09	0.2	1.92e-03	7.7	7.7	7.7	7.7	3.2	9.2	2.5	6.0	20.7	2.6
173	ok	0.09	0.2	1.95e-03	7.7	7.7	7.7	7.7	3.2	9.2	3.2	5.8	20.1	1.9
174	ok	0.09	0.2	1.95e-03	7.7	7.7	7.7	7.7	3.1	9.1	3.3	5.6	20.7	1.5
175	ok	0.09	0.2	1.92e-03	7.7	7.7	7.7	7.7	2.8	8.5	-1.2	2.9	19.0	-4.5
176	ok	0.09	0.2	1.89e-03	7.7	7.7	7.7	7.7	0.1	-7.7	-3.0	-8.0	-13.1	-4.8
177	ok	0.09	0.2	1.95e-03	7.7	7.7	7.7	7.7	5.15e-02	-8.0	-3.0	-8.8	-12.0	-2.9
178	ok	0.09	0.2	1.99e-03	7.7	7.7	7.7	7.7	2.2	9.3	2.0	2.2	21.8	3.4
179	ok	0.09	0.2	2.01e-03	7.7	7.7	7.7	7.7	2.0	9.3	1.5	4.2	21.1	3.9
180	ok	0.09	0.2	2.01e-03	7.7	7.7	7.7	7.7	1.7	9.6	2.3	5.4	21.8	3.5
181	ok	0.09	0.2	2.02e-03	7.7	7.7	7.7	7.7	1.4	9.9	2.8	6.3	21.5	3.0
182	ok	0.09	0.2	2.13e-03	7.7	7.7	7.7	7.7	0.8	9.9	3.2	7.0	22.3	2.4
183	ok	0.09	0.2	2.23e-03	7.7	7.7	7.7	7.7	0.6	9.8	3.5	7.4	21.9	1.5
184	ok	0.09	0.2	2.50e-03	7.7	7.7	7.7	7.7	0.3	12.2	3.5	7.5	22.5	0.8
185	ok	0.09	0.2	2.65e-03	7.7	7.7	7.7	7.7	7.76e-02	12.4	3.4	6.6	21.9	-0.4
186	ok	0.09	0.2	2.95e-03	7.7	7.7	7.7	7.7	-3.69e-02	12.9	3.8	5.5	22.8	-1.0
187	ok	0.09	0.2	3.00e-03	7.7	7.7	7.7	7.7	-9.11e-02	12.5	3.0	3.4	22.6	-1.0
188	ok	0.09	0.3	2.51e-03	7.7	7.7	7.7	7.7	-0.3	7.6	0.6	1.2	24.1	0.2
189	ok	0.09	0.3	3.73e-03	7.7	7.7	7.7	7.7	-3.6	4.2	0.7	1.7	30.6	-2.4
190	ok	0.09	0.4	5.48e-03	7.7	7.7	7.7	7.7	1.9	27.9	-10.1	5.2	32.2	0.3
191	ok	0.09	0.3	3.62e-03	7.7	7.7	7.7	7.7	-1.5	7.8	-2.7	6.1	30.3	0.1
192	ok	0.09	0.3	4.49e-03	7.7	7.7	7.7	7.7	2.6	24.0	-0.5	7.1	30.1	-0.6
193	ok	0.09	0.3	3.07e-03	7.7	7.7	7.7	7.7	-0.4	7.2	-2.4	7.4	29.1	-1.0
194	ok	0.09	0.3	3.66e-03	7.7	7.7	7.7	7.7	3.7	20.7	-0.3	8.0	29.4	-2.0
195	ok	0.09	0.3	2.65e-03	7.7	7.7	7.7	7.7	0.6	4.8	-1.6	7.1	28.3	-2.5
196	ok	0.09	0.3	3.36e-03	7.7	7.7	7.7	7.7	4.6	20.7	0.2	7.2	28.7	-3.3
197	ok	0.09	0.3	2.39e-03	7.7	7.7	7.7	7.7	1.7	5.1	-1.1	5.9	27.9	-3.6
198	ok	0.09	0.3	2.99e-03	7.7	7.7	7.7	7.7	5.5	20.2	0.4	5.4	28.4	-3.7
199	ok	0.09	0.3	2.51e-03	7.7	7.7	7.7	7.7	0.9	-4.2	-1.7	-8.6	-25.4	2.0
200	ok	0.09	0.3	3.40e-03	7.7	7.7	7.7	7.7	-0.6	-18.4	0.5	-8.6	-24.5	3.3
201	ok	0.09	0.3	2.33e-03	7.7	7.7	7.7	7.7	1.1	-3.8	-0.7	-8.0	-25.2	4.6
202	ok	0.09	0.3	2.98e-03	7.7	7.7	7.7	7.7	-0.5	-16.0	1.1	-6.4	-24.8	5.5
203	ok	0.09	0.3	2.45e-03	7.7	7.7	7.7	7.7	2.0	-5.7	-1.4	-5.4	-26.2	5.7
204	ok	0.09	0.3	3.12e-03	7.7	7.7	7.7	7.7	7.5	18.5	-2.8	5.5	25.6	4.3
205	ok	0.09	0.3	2.47e-03	7.7	7.7	7.7	7.7	2.4	-6.6	-2.1	-4.0	-27.2	4.3
206	ok	0.09	0.3	3.21e-03	7.7	7.7	7.7	7.7	7.6	19.5	1.6	6.7	26.5	-3.4
207	ok	0.09	0.3	2.32e-03	7.7	7.7	7.7	7.7	4.0	3.8	-0.2	5.8	25.7	-3.6
208	ok	0.09	0.3	3.08e-03	7.7	7.7	7.7	7.7	7.8	19.3	2.0	6.0	26.4	-4.3
209	ok	0.09	0.3	2.10e-03	7.7	7.7	7.7	7.7	2.2	-5.7	1.6	-5.2	-25.6	-5.6
210	ok	0.09	0.3	2.86e-03	7.7	7.7	7.7	7.7	0.2	-15.4	-0.5	-6.2	-24.2	-5.4
211	ok	0.09	0.3	2.11e-03	7.7	7.7	7.7	7.7	1.8	-4.0	1.3	-7.9	-24.9	-4.3
212	ok	0.09	0.3	3.21e-03	7.7	7.7	7.7	7.7	0.8	-17.7	0.2	-8.4	-24.4	-3.1
213	ok	0.09	0.3	2.13e-03	7.7	7.7	7.7	7.7	1.9	-3.9	-1.2	-7.8	-24.9	4.4
214	ok	0.09	0.3	2.86e-03	7.7	7.7	7.7	7.7	0.3	-15.3	0.7	-6.2	-24.3	5.4
215	ok	0.09	0.3	2.12e-03	7.7	7.7	7.7	7.7	2.3	-5.7	-1.5	-5.1	-25.6	5.7
216	ok	0.09	0.3	3.08e-03	7.7	7.7	7.7	7.7	7.9	19.3	-1.9	6.0	26.4	4.3
217	ok	0.09	0.3	2.34e-03	7.7	7.7	7.7	7.7	4.1	3.8	0.3	5.8	25.6	3.6
218	ok	0.09	0.3	3.20e-03	7.7	7.7	7.7	7.7	7.7	19.5	-1.4	6.6	26.5	3.5
219	ok	0.09	0.3	2.48e-03	7.7	7.7	7.7	7.7	2.5	-6.4	-5.8	-4.1	-27.3	-3.9
220	ok	0.09	0.3	3.13e-03	7.7	7.7	7.7	7.7	7.4	19.6	-0.3	6.6	26.7	2.4

221	ok	0.09	0.3	2.47e-03	7.7	7.7	7.7	7.7	2.1	-5.7	1.5	-5.5	-26.3	-5.7
222	ok	0.09	0.3	2.99e-03	7.7	7.7	7.7	7.7	-0.4	-16.0	-1.0	-6.5	-24.9	-5.4
223	ok	0.09	0.3	2.35e-03	7.7	7.7	7.7	7.7	1.2	-3.8	0.8	-8.0	-25.4	-4.5
224	ok	0.09	0.3	3.41e-03	7.7	7.7	7.7	7.7	-0.5	-18.4	-0.5	-8.6	-24.7	-3.3
225	ok	0.09	0.3	2.53e-03	7.7	7.7	7.7	7.7	1.0	-4.3	1.9	-8.6	-25.5	-2.0
226	ok	0.09	0.3	3.01e-03	7.7	7.7	7.7	7.7	5.6	20.1	-0.2	5.4	28.4	3.8
227	ok	0.09	0.3	2.42e-03	7.7	7.7	7.7	7.7	1.8	5.0	1.2	5.9	27.8	3.6
228	ok	0.09	0.3	3.33e-03	7.7	7.7	7.7	7.7	4.7	20.7	-8.93e-02	7.2	28.7	3.4
229	ok	0.09	0.3	2.68e-03	7.7	7.7	7.7	7.7	0.7	4.7	1.8	7.1	28.3	2.5
230	ok	0.09	0.3	3.63e-03	7.7	7.7	7.7	7.7	3.8	20.7	0.5	8.1	29.4	2.0
231	ok	0.09	0.3	3.03e-03	7.7	7.7	7.7	7.7	-0.3	7.2	2.6	7.4	29.1	1.0
232	ok	0.09	0.3	4.46e-03	7.7	7.7	7.7	7.7	2.7	24.0	0.7	7.2	30.2	0.6
233	ok	0.09	0.3	3.58e-03	7.7	7.7	7.7	7.7	-1.4	7.9	2.8	6.2	30.4	-0.1
234	ok	0.09	0.4	5.45e-03	7.7	7.7	7.7	7.7	1.9	28.1	10.2	5.3	32.3	-0.3
235	ok	0.09	0.3	3.71e-03	7.7	7.7	7.7	7.7	-3.6	4.3	-0.7	1.8	30.7	2.4
236	ok	0.09	0.3	4.42e-03	7.7	7.7	7.7	7.7	1.5	-10.2	-1.8	-4.6	-30.7	3.3
237	ok	0.09	0.4	7.08e-03	7.7	7.7	7.7	7.7	-0.1	-23.8	21.7	-9.8	-40.1	5.1
238	ok	0.09	0.4	3.34e-03	7.7	7.7	7.7	7.7	0.4	5.8	0.5	-3.7	-33.8	5.4
239	ok	0.09	0.4	9.47e-03	7.7	7.7	7.7	7.7	-4.5	-50.5	-5.8	-9.3	-40.8	6.1
240	ok	0.09	0.4	2.74e-03	7.7	7.7	7.7	7.7	1.4	15.0	-0.2	-4.2	-35.6	3.8
241	ok	0.09	0.4	8.97e-03	7.7	7.7	7.7	7.7	-4.4	-47.4	-6.9	-10.5	-42.5	4.8
242	ok	0.09	0.4	2.53e-03	7.7	7.7	7.7	7.7	2.3	19.3	-1.2	-4.1	-36.1	2.3
243	ok	0.09	0.4	8.51e-03	7.7	7.7	7.7	7.7	-3.5	-45.3	-8.0	-10.5	-41.9	3.5
244	ok	0.09	0.4	2.25e-03	7.7	7.7	7.7	7.7	0.8	18.1	5.5	-4.5	-35.3	-2.0
245	ok	0.09	0.3	7.61e-03	7.7	7.7	7.7	7.7	-2.3	-40.0	-8.5	-10.8	-40.1	3.2
246	ok	0.09	0.4	2.09e-03	7.7	7.7	7.7	7.7	1.7	14.6	3.5	-5.5	-34.3	-2.3
247	ok	0.09	0.4	5.30e-03	7.7	7.7	7.7	7.7	2.9	-10.7	18.6	-13.7	-41.8	3.4
248	ok	0.09	0.4	2.59e-03	7.7	7.7	7.7	7.7	4.4	16.1	-3.0	-5.4	-33.8	4.4
249	ok	0.09	0.4	7.80e-03	7.7	7.7	7.7	7.7	-0.7	-40.4	-10.3	-10.8	-40.3	6.3
250	ok	0.09	0.4	2.15e-03	7.7	7.7	7.7	7.7	5.1	20.1	-4.0	-4.4	-35.3	4.8
251	ok	0.09	0.4	8.54e-03	7.7	7.7	7.7	7.7	-0.4	-45.0	-11.5	-10.8	-42.6	6.4
252	ok	0.09	0.4	2.10e-03	7.7	7.7	7.7	7.7	5.3	20.3	-4.2	-3.7	-36.9	3.8
253	ok	0.09	0.4	8.78e-03	7.7	7.7	7.7	7.7	-0.2	-46.6	-12.0	-10.6	-43.6	5.2
254	ok	0.09	0.4	1.98e-03	7.7	7.7	7.7	7.7	4.6	19.6	3.2	-3.3	-36.1	-3.9
255	ok	0.09	0.4	8.46e-03	7.7	7.7	7.7	7.7	-0.6	-43.8	10.9	-10.4	-41.8	-6.5
256	ok	0.09	0.4	1.83e-03	7.7	7.7	7.7	7.7	5.0	19.3	3.4	-4.1	-34.7	-4.8
257	ok	0.09	0.4	7.58e-03	7.7	7.7	7.7	7.7	-0.2	-39.8	10.3	-10.5	-39.7	-6.4
258	ok	0.09	0.4	2.15e-03	7.7	7.7	7.7	7.7	5.0	15.8	2.7	-5.1	-33.5	-4.3
259	ok	0.09	0.4	5.26e-03	7.7	7.7	7.7	7.7	4.1	-10.7	18.6	-13.8	-41.9	3.5
260	ok	0.09	0.4	2.15e-03	7.7	7.7	7.7	7.7	4.7	15.8	-2.6	-5.1	-33.5	4.4
261	ok	0.09	0.4	7.60e-03	7.7	7.7	7.7	7.7	-0.2	-39.8	-10.2	-10.5	-39.8	6.5
262	ok	0.09	0.4	1.84e-03	7.7	7.7	7.7	7.7	4.9	19.3	-3.2	-4.1	-34.8	4.9
263	ok	0.09	0.4	8.48e-03	7.7	7.7	7.7	7.7	-0.6	-43.8	-10.8	-10.4	-41.9	6.6
264	ok	0.09	0.4	1.99e-03	7.7	7.7	7.7	7.7	4.5	19.6	-3.1	-3.3	-36.2	3.9
265	ok	0.09	0.4	8.80e-03	7.7	7.7	7.7	7.7	-0.1	-46.6	12.2	-10.7	-43.8	-5.1
266	ok	0.09	0.4	2.11e-03	7.7	7.7	7.7	7.7	5.5	20.5	4.3	-3.8	-37.1	-3.8
267	ok	0.09	0.4	8.57e-03	7.7	7.7	7.7	7.7	-0.3	-45.1	11.6	-10.9	-42.7	-6.3
268	ok	0.09	0.4	2.17e-03	7.7	7.7	7.7	7.7	5.2	20.2	4.1	-4.5	-35.5	-4.7
269	ok	0.09	0.4	7.83e-03	7.7	7.7	7.7	7.7	-0.7	-40.5	10.4	-10.8	-40.5	-6.2
270	ok	0.09	0.4	2.60e-03	7.7	7.7	7.7	7.7	4.6	16.2	3.0	-5.4	-33.9	-4.3
271	ok	0.09	0.4	5.34e-03	7.7	7.7	7.7	7.7	2.9	-10.7	-18.5	-13.8	-42.0	-3.3
272	ok	0.09	0.4	2.11e-03	7.7	7.7	7.7	7.7	1.8	14.7	-3.4	-5.5	-34.5	2.4
273	ok	0.09	0.3	7.65e-03	7.7	7.7	7.7	7.7	-2.2	-40.1	8.7	-10.9	-40.3	-3.2
274	ok	0.09	0.4	2.27e-03	7.7	7.7	7.7	7.7	0.9	18.2	-5.3	-4.5	-35.5	2.0
275	ok	0.09	0.4	8.50e-03	7.7	7.7	7.7	7.7	-3.4	-45.4	8.2	-10.5	-42.0	-3.5
276	ok	0.09	0.4	2.56e-03	7.7	7.7	7.7	7.7	2.4	19.3	1.4	-4.1	-36.2	-2.3
277	ok	0.09	0.4	8.95e-03	7.7	7.7	7.7	7.7	-4.3	-47.4	7.1	-10.5	-42.6	-4.8
278	ok	0.09	0.4	2.70e-03	7.7	7.7	7.7	7.7	1.4	15.1	0.4	-4.2	-35.6	-3.8
279	ok	0.09	0.4	9.42e-03	7.7	7.7	7.7	7.7	-4.5	-50.3	5.9	-9.2	-40.8	-6.0
280	ok	0.09	0.3	3.50e-03	7.7	7.7	7.7	7.7	0.4	-5.14e-02	-0.3	-3.7	-33.7	-5.4
281	ok	0.09	0.4	7.01e-03	7.7	7.7	7.7	7.7	-0.1	-23.5	-21.5	-9.7	-40.0	-5.1
282	ok	0.09	0.3	4.40e-03	7.7	7.7	7.7	7.7	1.5	-9.9	1.9	-4.6	-30.6	-3.3
283	ok	0.09	0.3	4.91e-03	7.7	7.7	7.7	7.7	2.4	-9.9	-1.5	-4.2	-30.9	2.7
284	ok	0.09	0.4	6.62e-03	7.7	7.7	7.7	7.7	-3.4	-23.3	22.7	-10.2	-40.9	5.3
285	ok	0.09	0.4	3.43e-03	7.7	7.7	7.7	7.7	0.8	-4.8	15.0	-3.8	-33.8	5.0
286	ok	0.09	0.4	9.99e-03	7.7	7.7	7.7	7.7	-6.8	-52.0	23.1	-11.7	-43.1	4.4
287	ok	0.09	0.4	2.75e-03	7.7	7.7	7.7	7.7	2.7	15.8	12.7	-4.9	-35.8	3.1
288	ok	0.09	0.4	9.60e-03	7.7	7.7	7.7	7.7	-5.5	-49.5	-9.7	-11.0	-44.6	4.5
289	ok	0.09	0.4	2.66e-03	7.7	7.7	7.7	7.7	3.7	21.5	11.0	-4.8	-36.3	1.7
290	ok	0.09	0.4	9.12e-03	7.7	7.7	7.7	7.7	-5.5	-47.6	21.2	-12.1	-44.1	1.9
291	ok	0.09	0.4	2.34e-03	7.7	7.7	7.7	7.7	2.0	20.1	3.3	-4.2	-35.3	-1.5
292	ok	0.09	0.4	8.11e-03	7.7	7.7	7.7	7.7	-3.8	-42.7	18.6	-12.2	-42.1	1.8
293	ok	0.09	0.4	2.08e-03	7.7	7.7	7.7	7.7	1.5	16.6	2.1	-5.2	-34.2	-1.3
294	ok	0.09	0.4	4.22e-03	7.7	7.7	7.7	7.7	1.7	-9.9	20.1	-14.3	-43.0	3.7
295	ok	0.09	0.4	2.69e-03	7.7	7.7	7.7	7.7	3.8	10.9	9.3	-6.5	-33.9	3.8
296	ok	0.09	0.4	8.33e-03	7.7	7.7	7.7	7.7	-2.7	-41.6	18.4	-12.4	-42.5	4.8
297	ok	0.09	0.4	2.34e-03	7.7	7.7	7.7	7.7	6.4	20.8	6.9	-5.3	-35.5	4.0
298	ok	0.09	0.4	9.22e-03	7.7	7.7	7.7	7.7	-1.3	-47.2	-14.4	-11.2	-44.7	6.1

299	ok	0.09	0.4	2.44e-03	7.7	7.7	7.7	7.7	6.6	22.1	6.6	-4.6	-37.0	3.2
300	ok	0.09	0.4	9.50e-03	7.7	7.7	7.7	7.7	-1.2	-48.9	-15.3	-11.1	-45.9	4.9
301	ok	0.09	0.4	2.39e-03	7.7	7.7	7.7	7.7	5.4	21.3	-6.8	-4.2	-36.3	-3.2
302	ok	0.09	0.4	9.13e-03	7.7	7.7	7.7	7.7	-3.1	-46.1	-20.1	-12.1	-44.2	-4.7
303	ok	0.09	0.4	2.24e-03	7.7	7.7	7.7	7.7	5.8	20.0	-6.8	-5.0	-34.9	-4.0
304	ok	0.09	0.4	8.13e-03	7.7	7.7	7.7	7.7	-2.5	-41.0	-18.5	-12.3	-42.0	-4.8
305	ok	0.09	0.4	2.01e-03	7.7	7.7	7.7	7.7	3.0	10.1	-8.6	-6.2	-33.7	-3.7
306	ok	0.09	0.4	4.09e-03	7.7	7.7	7.7	7.7	1.7	-10.0	20.3	-14.4	-43.0	3.9
307	ok	0.09	0.4	2.01e-03	7.7	7.7	7.7	7.7	3.2	10.1	8.7	-6.2	-33.7	3.8
308	ok	0.09	0.4	8.15e-03	7.7	7.7	7.7	7.7	-2.5	-41.1	18.7	-12.3	-42.1	5.0
309	ok	0.09	0.4	2.26e-03	7.7	7.7	7.7	7.7	5.7	20.1	7.0	-5.0	-35.0	4.1
310	ok	0.09	0.4	9.15e-03	7.7	7.7	7.7	7.7	-3.1	-46.2	20.3	-12.2	-44.3	4.8
311	ok	0.09	0.4	2.41e-03	7.7	7.7	7.7	7.7	5.3	21.4	6.9	-4.2	-36.4	3.3
312	ok	0.09	0.4	9.52e-03	7.7	7.7	7.7	7.7	-1.1	-48.9	15.4	-11.2	-46.1	-4.9
313	ok	0.09	0.4	2.45e-03	7.7	7.7	7.7	7.7	6.8	22.3	-6.4	-4.6	-37.2	-3.1
314	ok	0.09	0.4	9.25e-03	7.7	7.7	7.7	7.7	-1.3	-47.3	14.6	-11.3	-44.9	-6.0
315	ok	0.09	0.4	2.36e-03	7.7	7.7	7.7	7.7	6.6	20.9	-6.8	-5.3	-35.6	-4.0
316	ok	0.09	0.4	8.37e-03	7.7	7.7	7.7	7.7	-2.6	-41.8	-18.4	-12.5	-42.7	-4.7
317	ok	0.09	0.4	2.72e-03	7.7	7.7	7.7	7.7	3.7	10.9	-9.3	-6.5	-34.1	-3.7
318	ok	0.09	0.4	4.26e-03	7.7	7.7	7.7	7.7	1.8	-9.9	-20.2	-14.3	-43.2	-3.7
319	ok	0.09	0.4	2.11e-03	7.7	7.7	7.7	7.7	1.4	16.7	-2.0	-5.2	-34.4	1.4
320	ok	0.09	0.4	8.14e-03	7.7	7.7	7.7	7.7	-6.2	-44.3	-12.4	-11.4	-42.9	2.1
321	ok	0.09	0.4	2.36e-03	7.7	7.7	7.7	7.7	4.8	21.8	-9.4	-5.2	-35.2	-0.8
322	ok	0.09	0.4	9.12e-03	7.7	7.7	7.7	7.7	-5.4	-47.7	-21.0	-12.1	-44.6	-1.9
323	ok	0.09	0.4	2.69e-03	7.7	7.7	7.7	7.7	3.8	21.5	-10.8	-4.8	-36.4	-1.7
324	ok	0.09	0.4	9.57e-03	7.7	7.7	7.7	7.7	-5.5	-49.5	9.8	-11.0	-44.7	-4.5
325	ok	0.09	0.4	2.72e-03	7.7	7.7	7.7	7.7	2.7	15.9	-12.6	-4.9	-35.8	-3.1
326	ok	0.09	0.4	9.93e-03	7.7	7.7	7.7	7.7	-6.8	-51.8	-22.9	-11.6	-43.0	-4.3
327	ok	0.09	0.3	3.40e-03	7.7	7.7	7.7	7.7	0.9	-4.8	-14.8	-3.8	-33.7	-5.0
328	ok	0.09	0.4	6.56e-03	7.7	7.7	7.7	7.7	-3.3	-23.0	-22.5	-10.1	-40.8	-5.3
329	ok	0.09	0.3	4.88e-03	7.7	7.7	7.7	7.7	2.4	-9.6	1.5	-4.2	-30.8	-2.7
330	ok	0.09	0.3	4.88e-03	7.7	7.7	7.7	7.7	-1.8	-15.1	-4.3	-0.6	-26.8	1.1
331	ok	0.09	0.3	3.80e-03	7.7	7.7	7.7	7.7	-3.4	6.8	16.8	-7.2	-29.4	4.6
332	ok	0.09	0.3	3.10e-03	7.7	7.7	7.7	7.7	-1.4	-2.4	14.1	-3.5	-29.6	4.2
333	ok	0.09	0.4	2.84e-03	7.7	7.7	7.7	7.7	-2.3	16.9	17.2	-10.2	-33.1	4.3
334	ok	0.09	0.3	1.98e-03	7.7	7.7	7.7	7.7	3.5	2.3	13.4	-5.6	-32.1	3.5
335	ok	0.09	0.4	2.19e-03	7.7	7.7	7.7	7.7	2.1	22.2	16.2	-10.2	-34.1	3.8
336	ok	0.09	0.3	1.68e-03	7.7	7.7	7.7	7.7	5.5	6.2	12.1	-5.5	-32.5	3.0
337	ok	0.09	0.4	2.00e-03	7.7	7.7	7.7	7.7	3.7	25.5	14.7	-10.0	-33.5	3.3
338	ok	0.09	0.3	1.57e-03	7.7	7.7	7.7	7.7	7.0	6.1	10.9	-5.4	-31.3	2.7
339	ok	0.09	0.4	1.85e-03	7.7	7.7	7.7	7.7	3.7	23.4	-13.5	-9.1	-32.6	-1.8
340	ok	0.09	0.3	1.60e-03	7.7	7.7	7.7	7.7	5.6	4.8	3.3	-4.5	-30.3	-6.83e-02
341	ok	0.09	0.3	1.97e-03	7.7	7.7	7.7	7.7	6.1	25.5	12.3	-9.5	-30.4	3.7
342	ok	0.09	0.3	1.66e-03	7.7	7.7	7.7	7.7	8.5	6.1	9.3	-5.5	-29.9	4.0
343	ok	0.09	0.4	2.25e-03	7.7	7.7	7.7	7.7	6.3	25.3	12.4	-9.9	-32.2	4.7
344	ok	0.09	0.3	1.75e-03	7.7	7.7	7.7	7.7	9.5	6.2	8.7	-5.4	-31.5	4.2
345	ok	0.09	0.4	2.42e-03	7.7	7.7	7.7	7.7	6.2	26.9	13.2	-10.2	-33.8	4.7
346	ok	0.09	0.3	1.70e-03	7.7	7.7	7.7	7.7	9.9	6.2	9.1	-5.4	-32.9	4.0
347	ok	0.09	0.4	2.44e-03	7.7	7.7	7.7	7.7	6.3	27.5	13.8	-10.2	-34.5	4.2
348	ok	0.09	0.3	1.59e-03	7.7	7.7	7.7	7.7	10.1	6.0	9.5	-5.3	-33.0	3.5
349	ok	0.09	0.4	2.33e-03	7.7	7.7	7.7	7.7	3.4	26.0	-13.7	-9.9	-33.3	-4.8
350	ok	0.09	0.3	1.49e-03	7.7	7.7	7.7	7.7	7.5	5.4	-9.1	-5.2	-31.1	-4.3
351	ok	0.09	0.4	2.18e-03	7.7	7.7	7.7	7.7	4.3	24.4	-12.7	-9.8	-31.8	-4.8
352	ok	0.09	0.3	1.44e-03	7.7	7.7	7.7	7.7	7.7	5.3	-9.4	-5.4	-29.7	-4.1
353	ok	0.09	0.3	2.01e-03	7.7	7.7	7.7	7.7	5.3	24.9	12.6	-9.4	-30.3	3.9
354	ok	0.09	0.3	1.44e-03	7.7	7.7	7.7	7.7	7.8	5.4	9.5	-5.4	-29.7	4.2
355	ok	0.09	0.4	2.17e-03	7.7	7.7	7.7	7.7	4.4	24.5	12.8	-9.8	-31.8	4.9
356	ok	0.09	0.3	1.49e-03	7.7	7.7	7.7	7.7	7.7	5.6	9.2	-5.2	-31.1	4.4
357	ok	0.09	0.4	2.32e-03	7.7	7.7	7.7	7.7	3.5	26.2	13.8	-10.0	-33.3	4.9
358	ok	0.09	0.3	1.59e-03	7.7	7.7	7.7	7.7	10.1	6.0	-9.4	-5.4	-33.2	-3.4
359	ok	0.09	0.4	2.43e-03	7.7	7.7	7.7	7.7	6.2	27.8	-13.8	-10.2	-34.7	-4.2
360	ok	0.09	0.3	1.70e-03	7.7	7.7	7.7	7.7	9.9	6.3	-9.0	-5.4	-33.0	-3.9
361	ok	0.09	0.4	2.42e-03	7.7	7.7	7.7	7.7	6.2	27.2	-13.2	-10.2	-33.9	-4.6
362	ok	0.09	0.3	1.75e-03	7.7	7.7	7.7	7.7	9.5	6.2	-8.7	-5.5	-31.6	-4.1
363	ok	0.09	0.4	2.25e-03	7.7	7.7	7.7	7.7	6.3	25.5	-12.4	-9.9	-32.3	-4.6
364	ok	0.09	0.3	1.67e-03	7.7	7.7	7.7	7.7	8.5	6.1	-9.3	-5.6	-30.0	-3.9
365	ok	0.09	0.4	1.98e-03	7.7	7.7	7.7	7.7	6.0	25.7	-12.4	-9.5	-30.5	-3.7
366	ok	0.09	0.3	1.60e-03	7.7	7.7	7.7	7.7	4.3	5.4	10.3	-4.8	-28.2	4.0
367	ok	0.09	0.4	1.87e-03	7.7	7.7	7.7	7.7	3.7	23.6	13.6	-9.1	-32.7	1.8
368	ok	0.09	0.3	1.58e-03	7.7	7.7	7.7	7.7	7.0	6.0	-10.8	-5.4	-31.4	-2.7
369	ok	0.09	0.4	2.02e-03	7.7	7.7	7.7	7.7	3.8	25.6	-14.7	-10.0	-33.6	-3.2
370	ok	0.09	0.3	1.70e-03	7.7	7.7	7.7	7.7	5.6	6.1	-12.0	-5.5	-32.5	-3.0
371	ok	0.09	0.4	2.21e-03	7.7	7.7	7.7	7.7	2.2	22.3	-16.1	-10.2	-34.1	-3.7
372	ok	0.09	0.3	2.27e-03	7.7	7.7	7.7	7.7	0.9	2.3	-13.3	-5.6	-32.1	-3.5
373	ok	0.09	0.4	2.81e-03	7.7	7.7	7.7	7.7	-2.2	17.0	-17.1	-10.2	-33.0	-4.3
374	ok	0.09	0.3	3.07e-03	7.7	7.7	7.7	7.7	-1.4	-2.3	-14.0	-3.5	-29.6	-4.2
375	ok	0.09	0.3	3.77e-03	7.7	7.7	7.7	7.7	-3.3	7.0	-16.7	-7.2	-29.3	-4.6
376	ok	0.09	0.3	4.84e-03	7.7	7.7	7.7	7.7	-1.8	-14.8	4.3	-0.6	-26.8	-1.1

377	ok	0.09	0.1	4.68e-03	7.7	7.7	7.7	7.7	-2.3	-10.4	-4.3	1.2	-11.8	3.1
378	ok	0.09	0.2	3.15e-03	7.7	7.7	7.7	7.7	0.6	15.5	5.8	-3.1	-11.3	2.8
379	ok	0.09	0.2	1.55e-03	7.7	7.7	7.7	7.7	1.5	9.9	-1.7	-1.4	-12.8	2.7
380	ok	0.09	0.2	1.50e-03	7.7	7.7	7.7	7.7	4.1	27.4	4.6	-5.0	-12.9	2.3
381	ok	0.09	0.2	8.14e-04	7.7	7.7	7.7	7.7	3.8	16.4	5.2	-3.0	-14.2	2.3
382	ok	0.09	0.2	1.45e-03	7.7	7.7	7.7	7.7	6.9	34.4	3.6	-4.7	-13.3	2.2
383	ok	0.09	0.2	1.43e-03	7.7	7.7	7.7	7.7	6.5	20.5	4.6	-2.8	-14.3	2.3
384	ok	0.09	0.2	1.39e-03	7.7	7.7	7.7	7.7	9.3	34.6	2.4	-4.5	-13.2	2.2
385	ok	0.09	0.2	1.58e-03	7.7	7.7	7.7	7.7	8.6	20.2	3.6	-2.7	-13.6	2.3
386	ok	0.09	0.2	1.63e-03	7.7	7.7	7.7	7.7	11.2	33.3	1.8	-4.5	-12.4	2.2
387	ok	0.09	0.2	1.85e-03	7.7	7.7	7.7	7.7	10.1	19.6	3.0	-2.5	-12.9	2.5
388	ok	0.09	0.2	1.87e-03	7.7	7.7	7.7	7.7	12.4	32.8	1.8	-4.3	-11.8	2.5
389	ok	0.09	0.2	2.03e-03	7.7	7.7	7.7	7.7	10.9	19.7	3.1	-2.4	-12.8	2.7
390	ok	0.09	0.2	2.01e-03	7.7	7.7	7.7	7.7	13.1	33.5	1.6	-4.5	-12.4	2.8
391	ok	0.09	0.2	2.09e-03	7.7	7.7	7.7	7.7	13.2	20.5	2.9	-2.7	-13.6	2.9
392	ok	0.09	0.2	1.96e-03	7.7	7.7	7.7	7.7	13.0	34.9	1.8	-4.5	-13.0	2.8
393	ok	0.09	0.2	2.03e-03	7.7	7.7	7.7	7.7	13.4	21.1	3.2	-2.8	-14.2	2.9
394	ok	0.09	0.2	1.87e-03	7.7	7.7	7.7	7.7	12.9	35.4	2.2	-4.4	-13.3	2.7
395	ok	0.09	0.2	1.99e-03	7.7	7.7	7.7	7.7	11.2	20.9	3.7	-2.8	-14.2	2.8
396	ok	0.09	0.2	1.74e-03	7.7	7.7	7.7	7.7	10.9	33.5	-2.9	-4.3	-12.8	-3.0
397	ok	0.09	0.2	1.84e-03	7.7	7.7	7.7	7.7	8.9	19.7	-4.0	-2.5	-13.4	-3.1
398	ok	0.09	0.2	1.71e-03	7.7	7.7	7.7	7.7	11.9	32.1	-2.7	-4.3	-12.2	-3.0
399	ok	0.09	0.2	1.77e-03	7.7	7.7	7.7	7.7	10.4	19.1	3.9	-2.4	-12.9	2.8
400	ok	0.09	0.2	1.80e-03	7.7	7.7	7.7	7.7	12.0	31.5	2.8	-4.2	-11.7	2.8
401	ok	0.09	0.2	1.76e-03	7.7	7.7	7.7	7.7	10.0	19.2	-3.8	-2.4	-12.9	-2.7
402	ok	0.09	0.2	1.73e-03	7.7	7.7	7.7	7.7	11.4	32.1	2.7	-4.4	-12.3	3.0
403	ok	0.09	0.2	1.83e-03	7.7	7.7	7.7	7.7	9.2	19.8	4.1	-2.5	-13.4	3.2
404	ok	0.09	0.2	1.73e-03	7.7	7.7	7.7	7.7	10.5	33.6	2.9	-4.4	-12.8	3.0
405	ok	0.09	0.2	1.98e-03	7.7	7.7	7.7	7.7	10.9	21.1	-3.7	-2.8	-14.3	-2.7
406	ok	0.09	0.2	1.85e-03	7.7	7.7	7.7	7.7	13.2	35.7	-2.2	-4.4	-13.4	-2.6
407	ok	0.09	0.2	2.04e-03	7.7	7.7	7.7	7.7	13.7	21.3	-3.3	-2.8	-14.2	-2.8
408	ok	0.09	0.2	1.93e-03	7.7	7.7	7.7	7.7	13.3	35.2	-1.8	-4.5	-13.0	-2.7
409	ok	0.09	0.2	2.10e-03	7.7	7.7	7.7	7.7	13.5	20.7	-3.0	-2.7	-13.7	-2.9
410	ok	0.09	0.2	2.00e-03	7.7	7.7	7.7	7.7	13.3	33.7	-1.7	-4.5	-12.4	-2.7
411	ok	0.09	0.2	2.03e-03	7.7	7.7	7.7	7.7	10.7	19.8	-3.2	-2.4	-12.9	-2.7
412	ok	0.09	0.2	1.86e-03	7.7	7.7	7.7	7.7	12.6	32.9	-1.9	-4.2	-11.8	-2.4
413	ok	0.09	0.2	1.86e-03	7.7	7.7	7.7	7.7	9.9	19.7	-3.1	-2.5	-12.9	-2.4
414	ok	0.09	0.2	1.63e-03	7.7	7.7	7.7	7.7	11.3	33.4	-1.8	-4.5	-12.4	-2.2
415	ok	0.09	0.2	1.59e-03	7.7	7.7	7.7	7.7	8.5	20.3	-3.6	-2.7	-13.7	-2.3
416	ok	0.09	0.2	1.38e-03	7.7	7.7	7.7	7.7	9.4	34.7	-2.4	-4.4	-13.2	-2.1
417	ok	0.09	0.2	1.44e-03	7.7	7.7	7.7	7.7	6.4	20.6	-4.5	-2.8	-14.3	-2.3
418	ok	0.09	0.2	1.47e-03	7.7	7.7	7.7	7.7	6.9	34.5	-3.5	-4.6	-13.3	-2.2
419	ok	0.09	0.2	8.15e-04	7.7	7.7	7.7	7.7	3.8	16.5	-5.1	-3.0	-14.2	-2.3
420	ok	0.09	0.2	1.48e-03	7.7	7.7	7.7	7.7	4.1	27.5	-4.6	-5.0	-12.9	-2.3
421	ok	0.09	0.2	1.55e-03	7.7	7.7	7.7	7.7	1.4	10.0	1.8	-1.4	-12.8	-2.7
422	ok	0.09	0.2	3.12e-03	7.7	7.7	7.7	7.7	0.7	15.7	-5.7	-3.1	-11.3	-2.7
423	ok	0.09	0.1	4.65e-03	7.7	7.7	7.7	7.7	-2.3	-10.0	4.3	1.2	-11.8	-3.1
424	ok	0.09	7.47e-02	3.98e-03	7.7	7.7	7.7	7.7	-0.3	1.2	2.5	-2.6	-3.5	-1.9
425	ok	0.09	8.24e-02	2.40e-03	7.7	7.7	7.7	7.7	-1.7	15.4	4.8	-5.1	-3.2	-1.5
426	ok	0.09	7.05e-02	1.15e-03	7.7	7.7	7.7	7.7	-1.9	16.7	-7.1	0.5	-1.2	-3.9
427	ok	0.09	8.04e-02	1.04e-03	7.7	7.7	7.7	7.7	6.5	6.7	2.3	-3.7	-2.0	4.1
428	ok	0.09	8.96e-02	1.36e-03	7.7	7.7	7.7	7.7	-0.3	11.2	-11.5	0.9	-0.9	-5.0
429	ok	0.09	9.31e-02	1.67e-03	7.7	7.7	7.7	7.7	10.5	18.8	3.4	-3.0	-1.9	4.5
430	ok	0.09	9.61e-02	2.00e-03	7.7	7.7	7.7	7.7	-1.2	11.7	-11.1	0.4	-1.3	-5.2
431	ok	0.09	9.45e-02	2.08e-03	7.7	7.7	7.7	7.7	14.1	17.7	5.5	-2.8	-1.8	4.7
432	ok	0.09	0.1	2.25e-03	7.7	7.7	7.7	7.7	-0.9	11.8	-12.7	0.3	-1.2	-5.3
433	ok	0.09	9.35e-02	2.31e-03	7.7	7.7	7.7	7.7	16.4	16.6	7.2	-2.8	-1.7	4.8
434	ok	0.09	0.1	2.45e-03	7.7	7.7	7.7	7.7	-0.2	11.4	-14.3	0.5	-1.1	-5.3
435	ok	0.09	9.55e-02	2.50e-03	7.7	7.7	7.7	7.7	17.6	16.0	8.8	-2.7	-1.6	4.9
436	ok	0.09	0.1	2.59e-03	7.7	7.7	7.7	7.7	20.6	13.1	14.9	1.6	4.97e-02	5.1
437	ok	0.09	9.96e-02	2.43e-03	7.7	7.7	7.7	7.7	17.7	16.4	9.9	-2.8	-1.7	5.0
438	ok	0.09	0.1	2.61e-03	7.7	7.7	7.7	7.7	21.1	9.7	15.3	1.5	-0.3	5.2
439	ok	0.09	0.1	2.44e-03	7.7	7.7	7.7	7.7	16.8	17.0	11.0	-2.8	-1.8	5.1
440	ok	0.09	0.1	2.53e-03	7.7	7.7	7.7	7.7	20.1	9.9	16.5	1.5	-0.4	5.3
441	ok	0.09	0.1	2.44e-03	7.7	7.7	7.7	7.7	15.6	17.0	12.2	-2.7	-1.8	5.2
442	ok	0.09	0.1	2.38e-03	7.7	7.7	7.7	7.7	18.6	9.7	17.6	1.6	-0.3	5.3
443	ok	0.09	0.1	2.27e-03	7.7	7.7	7.7	7.7	5.6	14.7	-14.0	-2.5	-1.8	-5.3
444	ok	0.09	0.1	2.21e-03	7.7	7.7	7.7	7.7	17.0	9.1	18.3	1.7	-0.3	5.3
445	ok	0.09	0.1	2.21e-03	7.7	7.7	7.7	7.7	13.5	14.1	13.7	-2.7	-1.7	5.2
446	ok	0.09	0.1	2.09e-03	7.7	7.7	7.7	7.7	14.1	12.4	18.9	1.9	5.04e-02	5.4
447	ok	0.09	0.1	2.04e-03	7.7	7.7	7.7	7.7	11.0	13.7	14.1	-2.5	-1.6	5.3
448	ok	0.09	0.1	2.09e-03	7.7	7.7	7.7	7.7	11.3	12.5	19.1	2.0	5.51e-02	5.5
449	ok	0.09	0.1	2.22e-03	7.7	7.7	7.7	7.7	7.9	14.0	14.0	-2.5	-1.7	5.4
450	ok	0.09	0.1	2.21e-03	7.7	7.7	7.7	7.7	11.1	9.3	18.5	1.8	-0.3	5.5
451	ok	0.09	0.1	2.26e-03	7.7	7.7	7.7	7.7	5.6	14.8	13.9	-2.5	-1.8	5.4
452	ok	0.09	0.1	2.38e-03	7.7	7.7	7.7	7.7	9.1	10.0	18.5	1.9	-0.3	5.5
453	ok	0.09	0.1	2.43e-03	7.7	7.7	7.7	7.7	3.6	14.9	13.7	-2.4	-1.9	5.3
454	ok	0.09	0.1	2.53e-03	7.7	7.7	7.7	7.7	7.3	10.3	18.3	2.0	-0.3	5.4

455	ok	0.09	0.1	2.54e-03	7.7	7.7	7.7	7.7	17.0	17.1	-11.1	-2.7	-1.8	-5.1
456	ok	0.09	0.1	2.61e-03	7.7	7.7	7.7	7.7	4.9	10.0	17.7	2.0	-0.3	5.4
457	ok	0.09	9.93e-02	2.44e-03	7.7	7.7	7.7	7.7	0.8	13.1	12.6	-2.4	-1.8	5.3
458	ok	0.09	0.1	2.59e-03	7.7	7.7	7.7	7.7	3.4	11.1	16.8	2.2	6.06e-02	5.4
459	ok	0.09	9.51e-02	2.50e-03	7.7	7.7	7.7	7.7	6.59e-02	12.4	11.7	-2.3	-1.7	5.2
460	ok	0.09	0.1	2.46e-03	7.7	7.7	7.7	7.7	2.8	10.9	15.5	2.3	7.29e-02	5.4
461	ok	0.09	9.29e-02	2.32e-03	7.7	7.7	7.7	7.7	-0.5	12.5	10.2	-2.3	-1.8	5.2
462	ok	0.09	0.1	2.26e-03	7.7	7.7	7.7	7.7	3.5	7.3	13.6	2.1	-0.2	5.3
463	ok	0.09	9.39e-02	2.09e-03	7.7	7.7	7.7	7.7	-0.6	12.7	8.4	-2.2	-1.9	5.2
464	ok	0.09	9.69e-02	2.01e-03	7.7	7.7	7.7	7.7	3.2	10.7	11.6	2.3	-0.3	5.2
465	ok	0.09	9.26e-02	1.67e-03	7.7	7.7	7.7	7.7	10.4	18.8	-3.4	-3.0	-1.9	-4.5
466	ok	0.09	9.05e-02	1.37e-03	7.7	7.7	7.7	7.7	1.6	15.8	9.1	2.7	-0.2	4.8
467	ok	0.09	8.00e-02	1.03e-03	7.7	7.7	7.7	7.7	6.5	6.8	-2.3	-3.7	-2.0	-4.1
468	ok	0.09	7.15e-02	1.15e-03	7.7	7.7	7.7	7.7	0.7	17.3	6.8	1.1	-1.1	3.6
469	ok	0.09	8.34e-02	2.39e-03	7.7	7.7	7.7	7.7	-1.8	15.6	-4.9	-5.1	-3.2	1.6
470	ok	0.09	7.54e-02	3.97e-03	7.7	7.7	7.7	7.7	-1.5	12.8	-4.8	-1.8	-3.6	2.6
471	ok	0.09	8.56e-02	2.74e-03	7.7	7.7	7.7	7.7	-1.9	7.2	4.2	-2.1	-6.8	-1.3
472	ok	0.09	9.44e-02	1.74e-03	7.7	7.7	7.7	7.7	2.9	4.7	0.5	-7.4	-6.6	0.8
473	ok	0.09	6.43e-02	1.15e-03	7.7	7.7	7.7	7.7	3.4	9.8	-8.0	-2.3	-3.9	-3.1
474	ok	0.09	7.61e-02	2.06e-03	7.7	7.7	7.7	7.7	0.4	10.3	-8.1	-3.3	-3.6	-4.0
475	ok	0.09	8.06e-02	1.88e-03	7.7	7.7	7.7	7.7	4.5	8.2	-12.3	1.2	-2.2	-4.6
476	ok	0.09	8.07e-02	2.66e-03	7.7	7.7	7.7	7.7	0.1	9.6	-11.4	-1.7	-2.7	-4.9
477	ok	0.09	9.55e-02	2.35e-03	7.7	7.7	7.7	7.7	3.5	7.6	-15.1	1.5	-1.8	-5.1
478	ok	0.09	8.27e-02	2.99e-03	7.7	7.7	7.7	7.7	-0.9	8.9	-13.4	-1.7	-2.5	-5.2
479	ok	0.09	0.1	2.62e-03	7.7	7.7	7.7	7.7	0.7	6.7	-17.3	0.6	-1.7	-5.5
480	ok	0.09	9.12e-02	3.17e-03	7.7	7.7	7.7	7.7	-1.2	8.3	-14.8	-2.0	-2.3	-5.3
481	ok	0.09	0.1	2.81e-03	7.7	7.7	7.7	7.7	1.3	6.4	-18.3	0.7	-1.6	-5.5
482	ok	0.09	9.58e-02	3.24e-03	7.7	7.7	7.7	7.7	-0.7	8.0	-15.8	-2.0	-2.2	-5.4
483	ok	0.09	0.1	2.89e-03	7.7	7.7	7.7	7.7	2.6	6.4	-19.1	0.6	-1.5	-5.6
484	ok	0.09	9.93e-02	3.28e-03	7.7	7.7	7.7	7.7	0.4	7.9	-16.5	-2.1	-2.2	-5.4
485	ok	0.09	0.1	2.88e-03	7.7	7.7	7.7	7.7	4.3	6.8	-19.7	0.5	-1.5	-5.6
486	ok	0.09	0.1	3.22e-03	7.7	7.7	7.7	7.7	2.0	8.3	-16.9	-2.0	-2.1	-5.4
487	ok	0.09	0.1	2.78e-03	7.7	7.7	7.7	7.7	6.4	7.0	-20.0	0.4	-1.5	-5.6
488	ok	0.09	0.1	3.08e-03	7.7	7.7	7.7	7.7	4.0	8.4	-17.0	-2.1	-2.1	-5.5
489	ok	0.09	0.1	2.61e-03	7.7	7.7	7.7	7.7	21.7	6.2	18.9	1.1	-1.0	5.4
490	ok	0.09	0.1	2.90e-03	7.7	7.7	7.7	7.7	6.5	8.1	-17.0	-2.1	-2.0	-5.5
491	ok	0.09	0.1	2.42e-03	7.7	7.7	7.7	7.7	19.4	6.5	19.6	1.1	-1.0	5.5
492	ok	0.09	0.1	2.73e-03	7.7	7.7	7.7	7.7	14.4	7.7	16.4	-2.3	-1.8	5.5
493	ok	0.09	0.1	2.25e-03	7.7	7.7	7.7	7.7	17.2	6.0	20.0	1.3	-1.0	5.5
494	ok	0.09	0.1	2.49e-03	7.7	7.7	7.7	7.7	11.5	7.5	16.8	-2.2	-1.8	5.5
495	ok	0.09	0.1	2.26e-03	7.7	7.7	7.7	7.7	14.5	6.0	20.2	1.3	-1.0	5.6
496	ok	0.09	0.1	2.73e-03	7.7	7.7	7.7	7.7	9.1	7.8	17.0	-2.2	-1.9	5.5
497	ok	0.09	0.1	2.43e-03	7.7	7.7	7.7	7.7	11.9	6.5	20.2	1.2	-1.1	5.6
498	ok	0.09	0.1	2.90e-03	7.7	7.7	7.7	7.7	6.5	8.2	16.9	-2.1	-2.0	5.5
499	ok	0.09	0.1	2.62e-03	7.7	7.7	7.7	7.7	9.4	6.9	20.2	1.3	-1.1	5.6
500	ok	0.09	0.1	3.09e-03	7.7	7.7	7.7	7.7	4.0	8.4	16.9	-2.1	-2.1	5.5
501	ok	0.09	0.1	2.79e-03	7.7	7.7	7.7	7.7	7.0	7.1	20.1	1.4	-1.3	5.6
502	ok	0.09	0.1	3.23e-03	7.7	7.7	7.7	7.7	1.8	8.3	16.8	-2.0	-2.1	5.5
503	ok	0.09	0.1	2.88e-03	7.7	7.7	7.7	7.7	5.1	6.9	19.7	1.4	-1.4	5.5
504	ok	0.09	9.89e-02	3.28e-03	7.7	7.7	7.7	7.7	0.2	7.9	16.4	-2.1	-2.2	5.5
505	ok	0.09	0.1	2.90e-03	7.7	7.7	7.7	7.7	3.7	6.6	18.9	1.5	-1.4	5.5
506	ok	0.09	9.54e-02	3.25e-03	7.7	7.7	7.7	7.7	-1.0	8.0	15.7	-2.0	-2.2	5.4
507	ok	0.09	0.1	2.82e-03	7.7	7.7	7.7	7.7	2.8	6.6	17.9	1.5	-1.4	5.4
508	ok	0.09	9.07e-02	3.18e-03	7.7	7.7	7.7	7.7	-1.5	8.3	14.7	-2.0	-2.3	5.4
509	ok	0.09	0.1	2.64e-03	7.7	7.7	7.7	7.7	2.6	7.1	16.6	1.4	-1.6	5.4
510	ok	0.09	8.22e-02	2.99e-03	7.7	7.7	7.7	7.7	-1.2	8.9	13.4	-1.7	-2.5	5.3
511	ok	0.09	9.51e-02	2.36e-03	7.7	7.7	7.7	7.7	3.3	7.6	15.0	1.5	-1.8	5.2
512	ok	0.09	8.01e-02	2.66e-03	7.7	7.7	7.7	7.7	-1.55e-02	9.6	11.4	-1.7	-2.7	5.0
513	ok	0.09	8.12e-02	1.88e-03	7.7	7.7	7.7	7.7	4.4	8.2	12.3	1.2	-2.2	4.7
514	ok	0.09	7.58e-02	2.06e-03	7.7	7.7	7.7	7.7	0.4	10.4	8.1	-3.3	-3.7	4.1
515	ok	0.09	6.50e-02	1.13e-03	7.7	7.7	7.7	7.7	3.5	9.9	8.0	-2.3	-3.9	3.2
516	ok	0.09	9.43e-02	1.73e-03	7.7	7.7	7.7	7.7	2.9	4.8	-0.6	-7.5	-6.6	-0.7
517	ok	0.09	8.63e-02	2.73e-03	7.7	7.7	7.7	7.7	-1.0	1.9	-1.7	-2.4	-6.8	0.6
518	ok	0.09	8.99e-02	1.03e-03	7.7	7.7	7.7	7.7	-2.3	10.4	4.8	-1.8	-7.0	-0.7
519	ok	0.09	0.1	3.49e-03	7.7	7.7	7.7	7.7	0.3	11.0	-12.4	-9.8	-10.7	-1.0
520	ok	0.09	0.1	1.97e-03	7.7	7.7	7.7	7.7	1.3	6.1	-9.8	-6.1	-8.9	-2.5
521	ok	0.09	0.1	2.12e-03	7.7	7.7	7.7	7.7	6.4	6.3	-8.2	-4.5	-7.4	-3.6
522	ok	0.09	9.20e-02	2.73e-03	7.7	7.7	7.7	7.7	-1.5	3.5	-15.8	-0.6	-6.4	-4.8
523	ok	0.09	0.1	2.96e-03	7.7	7.7	7.7	7.7	2.9	4.9	-11.2	-1.9	-6.4	-4.8
524	ok	0.09	9.47e-02	3.34e-03	7.7	7.7	7.7	7.7	-3.9	2.2	-17.6	-0.3	-6.1	-5.3
525	ok	0.09	0.1	3.36e-03	7.7	7.7	7.7	7.7	0.6	4.0	-13.2	-1.8	-6.2	-5.2
526	ok	0.09	9.96e-02	3.58e-03	7.7	7.7	7.7	7.7	-4.2	2.1	-18.7	-0.3	-6.0	-5.4
527	ok	0.09	0.1	3.55e-03	7.7	7.7	7.7	7.7	7.27e-02	3.8	-14.4	-1.8	-6.1	-5.3
528	ok	0.09	0.1	3.70e-03	7.7	7.7	7.7	7.7	-3.5	2.0	-19.6	-0.3	-5.9	-5.5
529	ok	0.09	0.1	3.61e-03	7.7	7.7	7.7	7.7	0.8	3.7	-15.4	-1.8	-6.1	-5.4
530	ok	0.09	0.1	3.67e-03	7.7	7.7	7.7	7.7	-1.9	2.1	-20.4	-0.3	-5.8	-5.5
531	ok	0.09	0.1	3.58e-03	7.7	7.7	7.7	7.7	2.5	3.8	-16.1	-1.9	-6.0	-5.4
532	ok	0.09	0.1	3.55e-03	7.7	7.7	7.7	7.7	0.5	2.2	-20.8	-0.4	-5.7	-5.6

533	ok	0.09	0.1	3.49e-03	7.7	7.7	7.7	7.7	4.7	3.8	-16.5	-1.9	-5.9	-5.4
534	ok	0.09	0.1	3.39e-03	7.7	7.7	7.7	7.7	3.1	2.3	-21.1	-0.4	-5.7	-5.6
535	ok	0.09	0.1	3.29e-03	7.7	7.7	7.7	7.7	7.4	3.9	-16.7	-1.9	-5.9	-5.5
536	ok	0.09	0.1	3.20e-03	7.7	7.7	7.7	7.7	6.2	2.3	-21.0	-0.7	-5.6	-5.6
537	ok	0.09	0.1	3.10e-03	7.7	7.7	7.7	7.7	10.5	3.9	-16.7	-2.2	-5.8	-5.5
538	ok	0.09	0.1	2.98e-03	7.7	7.7	7.7	7.7	9.4	2.2	-20.7	-0.7	-5.6	-5.6
539	ok	0.09	0.1	2.92e-03	7.7	7.7	7.7	7.7	13.5	4.0	-16.6	-2.2	-5.7	-5.5
540	ok	0.09	0.1	2.76e-03	7.7	7.7	7.7	7.7	15.9	2.6	20.1	-0.7	-5.5	5.6
541	ok	0.09	0.1	2.68e-03	7.7	7.7	7.7	7.7	16.4	4.1	16.4	-2.2	-5.7	5.5
542	ok	0.09	0.1	2.76e-03	7.7	7.7	7.7	7.7	12.2	2.6	20.4	-0.7	-5.5	5.7
543	ok	0.09	0.1	2.92e-03	7.7	7.7	7.7	7.7	13.5	4.0	16.6	-2.2	-5.7	5.5
544	ok	0.09	0.1	2.98e-03	7.7	7.7	7.7	7.7	9.4	2.2	20.7	-0.7	-5.6	5.7
545	ok	0.09	0.1	3.10e-03	7.7	7.7	7.7	7.7	10.5	3.9	16.6	-2.2	-5.8	5.5
546	ok	0.09	0.1	3.21e-03	7.7	7.7	7.7	7.7	6.2	2.3	20.9	-0.7	-5.6	5.7
547	ok	0.09	0.1	3.30e-03	7.7	7.7	7.7	7.7	7.4	3.8	16.6	-1.9	-5.9	5.5
548	ok	0.09	0.1	3.41e-03	7.7	7.7	7.7	7.7	3.1	2.3	21.0	-0.4	-5.7	5.7
549	ok	0.09	0.1	3.51e-03	7.7	7.7	7.7	7.7	4.6	3.8	16.5	-1.9	-5.9	5.5
550	ok	0.09	0.1	3.57e-03	7.7	7.7	7.7	7.7	0.3	2.2	20.8	-0.4	-5.7	5.6
551	ok	0.09	0.1	3.60e-03	7.7	7.7	7.7	7.7	2.2	3.7	16.1	-1.9	-6.0	5.5
552	ok	0.09	0.1	3.69e-03	7.7	7.7	7.7	7.7	-2.2	2.1	20.3	-0.3	-5.8	5.6
553	ok	0.09	0.1	3.63e-03	7.7	7.7	7.7	7.7	0.4	3.7	15.3	-1.8	-6.1	5.5
554	ok	0.09	0.1	3.72e-03	7.7	7.7	7.7	7.7	-3.9	2.0	19.5	-0.3	-5.9	5.6
555	ok	0.09	0.1	3.57e-03	7.7	7.7	7.7	7.7	-0.4	3.8	14.3	-1.8	-6.1	5.4
556	ok	0.09	9.90e-02	3.59e-03	7.7	7.7	7.7	7.7	-4.6	2.1	18.6	-0.3	-6.0	5.5
557	ok	0.09	0.1	3.38e-03	7.7	7.7	7.7	7.7	0.2	4.0	13.1	-1.8	-6.2	5.3
558	ok	0.09	9.52e-02	3.35e-03	7.7	7.7	7.7	7.7	-4.2	2.2	17.6	-0.3	-6.1	5.4
559	ok	0.09	0.1	2.96e-03	7.7	7.7	7.7	7.7	2.7	4.9	11.1	-1.9	-6.4	4.9
560	ok	0.09	9.18e-02	2.73e-03	7.7	7.7	7.7	7.7	-1.6	3.5	15.7	-0.6	-6.5	4.8
561	ok	0.09	0.1	2.11e-03	7.7	7.7	7.7	7.7	6.4	6.3	8.1	-4.5	-7.5	3.6
562	ok	0.09	0.1	1.95e-03	7.7	7.7	7.7	7.7	1.3	6.1	9.8	-6.2	-9.0	2.5
563	ok	0.09	0.1	3.50e-03	7.7	7.7	7.7	7.7	0.4	10.9	12.3	-9.8	-10.8	1.0
564	ok	0.09	9.05e-02	1.03e-03	7.7	7.7	7.7	7.7	0.6	4.5	-2.3	-1.8	-6.9	0.2
565	ok	0.09	4.60e-02	6.56e-04	7.7	7.7	7.7	7.7	1.3	2.3	3.4	-2.8	-2.8	-0.9
566	ok	0.09	6.99e-02	9.20e-04	7.7	7.7	7.7	7.7	3.5	-4.9	-2.0	-6.4	-2.1	-1.1
567	ok	0.09	8.05e-02	5.29e-04	7.7	7.7	7.7	7.7	6.1	0.3	-1.7	-6.7	-2.4	-1.8
568	ok	0.09	6.65e-02	6.28e-04	7.7	7.7	7.7	7.7	4.1	1.9	-2.5	-4.0	-1.7	-3.2
569	ok	0.09	7.59e-02	1.02e-03	7.7	7.7	7.7	7.7	9.9	-2.2	-1.1	-1.9	-2.1	-2.3
570	ok	0.09	7.92e-02	1.24e-03	7.7	7.7	7.7	7.7	-1.4	1.8	-0.6	0.2	-1.1	-4.3
571	ok	0.09	8.35e-02	1.48e-03	7.7	7.7	7.7	7.7	-3.3	-0.8	1.2	1.33e-02	-1.2	-4.4
572	ok	0.09	8.38e-02	1.43e-03	7.7	7.7	7.7	7.7	-4.1	1.8	0.8	0.1	-0.9	-4.6
573	ok	0.09	8.68e-02	1.52e-03	7.7	7.7	7.7	7.7	-4.7	-0.9	1.2	-3.60e-02	-1.1	-4.6
574	ok	0.09	8.64e-02	1.36e-03	7.7	7.7	7.7	7.7	-4.5	1.7	0.9	0.1	-0.8	-4.7
575	ok	0.09	8.71e-02	1.39e-03	7.7	7.7	7.7	7.7	-4.5	-1.9	1.3	-3.68e-02	-1.0	-4.7
576	ok	0.09	8.64e-02	1.16e-03	7.7	7.7	7.7	7.7	-3.6	1.5	1.0	7.70e-02	-0.7	-4.8
577	ok	0.09	8.65e-02	1.12e-03	7.7	7.7	7.7	7.7	-3.0	-1.9	1.3	-8.17e-02	-1.0	-4.7
578	ok	0.09	8.49e-02	8.17e-04	7.7	7.7	7.7	7.7	-1.6	1.4	1.1	1.16e-05	-0.6	-4.8
579	ok	0.09	8.49e-02	7.38e-04	7.7	7.7	7.7	7.7	-0.7	-1.9	1.4	-0.2	-0.9	-4.7
580	ok	0.09	8.27e-02	3.84e-04	7.7	7.7	7.7	7.7	0.9	1.3	1.1	-2.32e-02	-0.5	-4.9
581	ok	0.09	8.16e-02	4.39e-04	7.7	7.7	7.7	7.7	2.0	-1.9	1.5	-0.2	-0.8	-4.8
582	ok	0.09	7.88e-02	1.28e-04	7.7	7.7	7.7	7.7	3.9	-1.80e-02	1.2	-5.43e-02	-0.5	-4.9
583	ok	0.09	7.74e-02	3.95e-04	7.7	7.7	7.7	7.7	5.4	-1.9	1.5	-0.2	-0.8	-4.8
584	ok	0.09	7.45e-02	1.15e-04	7.7	7.7	7.7	7.7	7.5	7.80e-02	1.3	-8.96e-02	-0.4	-4.9
585	ok	0.09	7.29e-02	3.82e-04	7.7	7.7	7.7	7.7	9.1	-1.8	1.5	-0.2	-0.7	-4.8
586	ok	0.09	6.99e-02	1.09e-04	7.7	7.7	7.7	7.7	11.2	0.2	1.3	-8.86e-02	-0.3	-4.9
587	ok	0.09	6.80e-02	3.66e-04	7.7	7.7	7.7	7.7	14.3	-1.3	2.3	-0.2	-0.6	-3.9
588	ok	0.09	6.58e-02	1.15e-04	7.7	7.7	7.7	7.7	14.9	0.3	-1.3	-0.1	-0.2	4.9
589	ok	0.09	6.79e-02	3.68e-04	7.7	7.7	7.7	7.7	14.4	-1.3	-2.3	-0.2	-0.6	3.9
590	ok	0.09	7.00e-02	1.08e-04	7.7	7.7	7.7	7.7	11.3	0.2	-1.3	-8.85e-02	-0.3	4.9
591	ok	0.09	7.29e-02	3.85e-04	7.7	7.7	7.7	7.7	9.2	-1.8	-1.5	-0.3	-0.7	4.8
592	ok	0.09	7.45e-02	1.13e-04	7.7	7.7	7.7	7.7	7.6	8.49e-02	-1.3	-8.96e-02	-0.4	4.9
593	ok	0.09	7.73e-02	3.96e-04	7.7	7.7	7.7	7.7	5.4	-1.9	-1.5	-0.2	-0.8	4.8
594	ok	0.09	7.87e-02	1.25e-04	7.7	7.7	7.7	7.7	4.0	-1.54e-02	-1.2	-5.28e-02	-0.5	4.9
595	ok	0.09	8.14e-02	4.50e-04	7.7	7.7	7.7	7.7	2.0	-1.9	-1.5	-0.2	-0.8	4.8
596	ok	0.09	8.25e-02	4.18e-04	7.7	7.7	7.7	7.7	0.8	1.3	-1.1	-2.00e-02	-0.5	4.9
597	ok	0.09	8.47e-02	7.78e-04	7.7	7.7	7.7	7.7	-0.9	-1.9	-1.3	-0.2	-0.9	4.8
598	ok	0.09	8.46e-02	8.76e-04	7.7	7.7	7.7	7.7	-1.9	1.4	-1.1	4.46e-03	-0.6	4.9
599	ok	0.09	8.61e-02	1.19e-03	7.7	7.7	7.7	7.7	-3.5	-1.9	-1.3	-7.65e-02	-1.0	4.8
600	ok	0.09	8.60e-02	1.24e-03	7.7	7.7	7.7	7.7	-4.1	1.5	-1.0	8.25e-02	-0.7	4.8
601	ok	0.09	8.67e-02	1.47e-03	7.7	7.7	7.7	7.7	-5.1	-1.9	-1.2	-3.04e-02	-1.0	4.7
602	ok	0.09	8.60e-02	1.45e-03	7.7	7.7	7.7	7.7	-5.1	1.6	-0.9	0.1	-0.8	4.8
603	ok	0.09	8.65e-02	1.61e-03	7.7	7.7	7.7	7.7	-5.3	-0.9	-1.2	-3.09e-02	-1.1	4.6
604	ok	0.09	8.35e-02	1.51e-03	7.7	7.7	7.7	7.7	-4.7	1.8	-0.8	0.2	-0.9	4.7
605	ok	0.09	8.33e-02	1.56e-03	7.7	7.7	7.7	7.7	-3.8	-0.8	-1.2	1.45e-02	-1.2	4.4
606	ok	0.09	7.89e-02	1.30e-03	7.7	7.7	7.7	7.7	-1.8	1.8	1.8	0.2	-1.1	4.4
607	ok	0.09	7.43e-02	1.10e-03	7.7	7.7	7.7	7.7	9.6	-2.2	1.1	-1.9	-2.1	2.3
608	ok	0.09	6.64e-02	6.64e-04	7.7	7.7	7.7	7.7	3.9	1.9	2.5	-4.0	-1.7	3.2
609	ok	0.09	8.08e-02	5.47e-04	7.7	7.7	7.7	7.7	6.0	0.3	1.7	-6.7	-2.4	1.8
610	ok	0.09	7.02e-02	9.20e-04	7.7	7.7	7.7	7.7	3.4	-4.9	2.0	-6.4	-2.1	1.2

611	ok	0.09	4.60e-02	6.55e-04	7.7	7.7	7.7	7.7	1.3	2.2	-3.4	-2.8	-2.8	0.9

Nodo	x/d	V N/M	ver. rid	Af pr-	Af pr+	Af sec-	Af sec+	N x	N y	N xy	M x	M y	M xy
								-19.82	-51.98	-22.91	-32.85	-46.08	-8.79
	0.09	0.43	9.99e-03	7.70	7.70	7.70	7.70	21.70	35.70	23.14	13.37	32.31	8.75

Nodo	Stato	Max tau	Ver V pr	Ver V sec	Af V pr	Af V sec	V pr	V sec
		kN/ m2					kN/ m	kN/ m
1	ok	0.0						
2	ok	0.0						
3	ok	0.0						
4	ok	1.15						
5	ok	0.83						
6	ok	0.66						
7	ok	0.68						
8	ok	0.96						
9	ok	1.22						
10	ok	1.41						
11	ok	0.0						
12	ok	0.0						
13	ok	0.0						
14	ok	1.57						
15	ok	1.43						
16	ok	1.25						
17	ok	1.05						
18	ok	0.87						
19	ok	1.07						
20	ok	1.28						
21	ok	1.48						
22	ok	1.60						
23	ok	0.0						
24	ok	0.0						
25	ok	0.0						
26	ok	1.62						
27	ok	1.49						
28	ok	1.29						
29	ok	1.08						
30	ok	0.87						
31	ok	1.05						
32	ok	1.25						
33	ok	1.42						
34	ok	1.56						
35	ok	0.0						
36	ok	0.0						
37	ok	0.0						
38	ok	1.40						
39	ok	1.22						
40	ok	0.96						
41	ok	0.68						
42	ok	0.67						
43	ok	0.84						
44	ok	1.16						
45	ok	0.0						
46	ok	0.0						
47	ok	0.0						
48	ok	0.0						
49	ok	0.0						
50	ok	0.0						
51	ok	0.34						
52	ok	0.31						
53	ok	0.30						
54	ok	0.30						
55	ok	0.31						
56	ok	0.37						
57	ok	0.46						
58	ok	0.0						
59	ok	0.0						
60	ok	0.0						
61	ok	0.44						
62	ok	0.35						
63	ok	0.31						
64	ok	0.29						
65	ok	0.28						
66	ok	0.30						
67	ok	0.32						
68	ok	0.37						
69	ok	0.45						

70	ok	0.0
71	ok	0.0
72	ok	0.0
73	ok	0.44
74	ok	0.37
75	ok	0.32
76	ok	0.30
77	ok	0.28
78	ok	0.29
79	ok	0.31
80	ok	0.35
81	ok	0.44
82	ok	0.0
83	ok	0.0
84	ok	0.0
85	ok	0.46
86	ok	0.36
87	ok	0.31
88	ok	0.30
89	ok	0.30
90	ok	0.31
91	ok	0.34
92	ok	0.0
93	ok	0.0
94	ok	0.0
95	ok	0.0
96	ok	0.0
97	ok	0.0
98	ok	0.46
99	ok	0.48
100	ok	0.52
101	ok	0.50
102	ok	0.53
103	ok	0.50
104	ok	0.53
105	ok	0.0
106	ok	0.0
107	ok	0.0
108	ok	0.49
109	ok	0.49
110	ok	0.52
111	ok	0.50
112	ok	0.53
113	ok	0.50
114	ok	0.52
115	ok	0.48
116	ok	0.51
117	ok	0.0
118	ok	0.0
119	ok	0.0
120	ok	0.50
121	ok	0.48
122	ok	0.52
123	ok	0.50
124	ok	0.53
125	ok	0.51
126	ok	0.52
127	ok	0.49
128	ok	0.49
129	ok	0.0
130	ok	0.0
131	ok	0.0
132	ok	0.52
133	ok	0.49
134	ok	0.53
135	ok	0.50
136	ok	0.52
137	ok	0.48
138	ok	0.46
139	ok	0.0
140	ok	0.0
141	ok	0.0
142	ok	1.04
143	ok	0.68
144	ok	0.76
145	ok	0.64
146	ok	0.83
147	ok	0.71

148	ok	0.85
149	ok	0.69
150	ok	0.79
151	ok	0.58
152	ok	0.68
153	ok	0.60
154	ok	0.68
155	ok	0.58
156	ok	0.78
157	ok	0.69
158	ok	0.85
159	ok	0.71
160	ok	0.84
161	ok	0.68
162	ok	0.77
163	ok	0.57
164	ok	0.65
165	ok	0.57
166	ok	0.66
167	ok	0.58
168	ok	0.77
169	ok	0.68
170	ok	0.84
171	ok	0.71
172	ok	0.85
173	ok	0.69
174	ok	0.78
175	ok	0.58
176	ok	0.69
177	ok	0.59
178	ok	0.69
179	ok	0.58
180	ok	0.79
181	ok	0.70
182	ok	0.86
183	ok	0.71
184	ok	0.83
185	ok	0.64
186	ok	0.76
187	ok	0.68
188	ok	1.05
189	ok	0.88
190	ok	1.46
191	ok	0.78
192	ok	1.21
193	ok	0.95
194	ok	1.27
195	ok	0.96
196	ok	1.24
197	ok	0.88
198	ok	1.14
199	ok	0.78
200	ok	1.24
201	ok	0.78
202	ok	1.13
203	ok	0.89
204	ok	1.21
205	ok	0.97
206	ok	1.23
207	ok	0.96
208	ok	1.18
209	ok	0.87
210	ok	1.10
211	ok	0.77
212	ok	1.18
213	ok	0.77
214	ok	1.10
215	ok	0.88
216	ok	1.19
217	ok	0.97
218	ok	1.24
219	ok	0.97
220	ok	1.21
221	ok	0.89
222	ok	1.13
223	ok	0.79
224	ok	1.25
225	ok	0.79

226	ok	1.15						
227	ok	0.89						
228	ok	1.24						
229	ok	0.96						
230	ok	1.27						
231	ok	0.95						
232	ok	1.21						
233	ok	0.78						
234	ok	1.46						
235	ok	0.88						
236	ok	1.48						
237	ok	2.12						
238	ok	1.36						
239	ok	3.47						
240	ok	1.59						
241	ok	3.77						
242	ok	1.58						
243	ok	3.68						
244	ok	1.57						
245	ok	3.31						
246	ok	1.41						
247	ok	2.24						
248	ok	1.39						
249	ok	3.30						
250	ok	1.58						
251	ok	3.66						
252	ok	1.58						
253	ok	3.75						
254	ok	1.59						
255	ok	3.61						
256	ok	1.58						
257	ok	3.21						
258	ok	1.39						
259	ok	2.23						
260	ok	1.39						
261	ok	3.23						
262	ok	1.59						
263	ok	3.63						
264	ok	1.59						
265	ok	3.76						
266	ok	1.59						
267	ok	3.68						
268	ok	1.59						
269	ok	3.31						
270	ok	1.40						
271	ok	2.25						
272	ok	1.41						
273	ok	3.33						
274	ok	1.57						
275	ok	3.69						
276	ok	1.58						
277	ok	3.78						
278	ok	1.59						
279	ok	3.47						
280	ok	1.37						
281	ok	2.11						
282	ok	1.48						
283	ok	1.35						
284	ok	2.06						
285	ok	1.65						
286	ok Av	4.06	0.08	0.17	2.0	4.2	62.0	130.8
287	ok	1.86						
288	ok Av	4.40	0.09	0.18	2.2	4.5	68.6	140.9
289	ok	1.86						
290	ok Av	4.29	0.09	0.18	2.1	4.4	66.4	137.7
291	ok	1.85						
292	ok	3.88						
293	ok	1.59						
294	ok	2.33						
295	ok	1.59						
296	ok	3.92						
297	ok	1.86						
298	ok Av	4.33	0.09	0.18	2.2	4.4	70.3	138.1
299	ok	1.84						
300	ok Av	4.44	0.09	0.18	2.3	4.5	73.2	141.2
301	ok	1.86						
302	ok Av	4.28	0.09	0.17	2.3	4.3	70.7	136.2
303	ok	1.86						

304	ok	3.87						
305	ok	1.60						
306	ok	2.38						
307	ok	1.61						
308	ok	3.89						
309	ok	1.87						
310	ok Av	4.30	0.09	0.18	2.3	4.4	71.1	136.8
311	ok	1.86						
312	ok Av	4.46	0.09	0.18	2.3	4.5	73.5	141.8
313	ok	1.85						
314	ok Av	4.35	0.09	0.18	2.3	4.4	70.6	138.6
315	ok	1.86						
316	ok	3.94						
317	ok	1.60						
318	ok	2.35						
319	ok	1.59						
320	ok	3.90						
321	ok	1.85						
322	ok Av	4.30	0.09	0.18	2.1	4.4	66.7	138.1
323	ok	1.86						
324	ok Av	4.41	0.09	0.18	2.2	4.5	68.8	141.1
325	ok	1.87						
326	ok Av	4.06	0.08	0.17	2.0	4.2	61.9	130.7
327	ok	1.65						
328	ok	2.05						
329	ok	1.35						
330	ok	1.24						
331	ok	1.74						
332	ok	1.03						
333	ok	1.89						
334	ok	1.01						
335	ok	2.00						
336	ok	0.97						
337	ok	1.99						
338	ok	0.94						
339	ok	1.90						
340	ok	0.95						
341	ok	1.84						
342	ok	0.92						
343	ok	1.93						
344	ok	0.91						
345	ok	2.04						
346	ok	0.90						
347	ok	2.08						
348	ok	0.89						
349	ok	2.03						
350	ok	0.88						
351	ok	1.92						
352	ok	0.90						
353	ok	1.83						
354	ok	0.90						
355	ok	1.93						
356	ok	0.88						
357	ok	2.04						
358	ok	0.89						
359	ok	2.09						
360	ok	0.90						
361	ok	2.05						
362	ok	0.91						
363	ok	1.94						
364	ok	0.92						
365	ok	1.85						
366	ok	0.95						
367	ok	1.91						
368	ok	0.94						
369	ok	1.99						
370	ok	0.97						
371	ok	2.00						
372	ok	1.01						
373	ok	1.89						
374	ok	1.03						
375	ok	1.74						
376	ok	1.24						
377	ok	1.56						
378	ok	0.81						
379	ok	1.12						
380	ok	0.94						
381	ok	1.19						

382	ok	0.99
383	ok	1.19
384	ok	0.98
385	ok	1.18
386	ok	0.96
387	ok	1.15
388	ok	0.91
389	ok	1.16
390	ok	0.96
391	ok	1.18
392	ok	0.99
393	ok	1.21
394	ok	1.01
395	ok	1.20
396	ok	1.00
397	ok	1.17
398	ok	0.97
399	ok	1.14
400	ok	0.91
401	ok	1.14
402	ok	0.97
403	ok	1.18
404	ok	1.00
405	ok	1.21
406	ok	1.01
407	ok	1.21
408	ok	0.99
409	ok	1.19
410	ok	0.97
411	ok	1.16
412	ok	0.91
413	ok	1.16
414	ok	0.96
415	ok	1.18
416	ok	0.99
417	ok	1.20
418	ok	0.99
419	ok	1.19
420	ok	0.94
421	ok	1.12
422	ok	0.81
423	ok	1.56
424	ok	1.11
425	ok	0.43
426	ok	0.58
427	ok	0.35
428	ok	0.62
429	ok	0.36
430	ok	0.62
431	ok	0.36
432	ok	0.62
433	ok	0.36
434	ok	0.61
435	ok	0.37
436	ok	0.61
437	ok	0.35
438	ok	0.62
439	ok	0.36
440	ok	0.63
441	ok	0.36
442	ok	0.63
443	ok	0.36
444	ok	0.62
445	ok	0.35
446	ok	0.61
447	ok	0.35
448	ok	0.61
449	ok	0.35
450	ok	0.62
451	ok	0.36
452	ok	0.63
453	ok	0.36
454	ok	0.63
455	ok	0.36
456	ok	0.62
457	ok	0.35
458	ok	0.61
459	ok	0.37

460	ok	0.61
461	ok	0.36
462	ok	0.62
463	ok	0.36
464	ok	0.62
465	ok	0.36
466	ok	0.62
467	ok	0.35
468	ok	0.58
469	ok	0.43
470	ok	1.10
471	ok	0.89
472	ok	0.71
473	ok	0.77
474	ok	0.46
475	ok	0.68
476	ok	0.41
477	ok	0.67
478	ok	0.41
479	ok	0.67
480	ok	0.42
481	ok	0.68
482	ok	0.41
483	ok	0.69
484	ok	0.40
485	ok	0.67
486	ok	0.40
487	ok	0.67
488	ok	0.40
489	ok	0.67
490	ok	0.40
491	ok	0.67
492	ok	0.40
493	ok	0.68
494	ok	0.39
495	ok	0.68
496	ok	0.40
497	ok	0.67
498	ok	0.40
499	ok	0.67
500	ok	0.40
501	ok	0.67
502	ok	0.40
503	ok	0.67
504	ok	0.40
505	ok	0.69
506	ok	0.41
507	ok	0.68
508	ok	0.42
509	ok	0.67
510	ok	0.42
511	ok	0.67
512	ok	0.41
513	ok	0.68
514	ok	0.46
515	ok	0.78
516	ok	0.71
517	ok	0.89
518	ok	0.88
519	ok	1.57
520	ok	0.69
521	ok	0.65
522	ok	0.36
523	ok	0.66
524	ok	0.39
525	ok	0.67
526	ok	0.40
527	ok	0.67
528	ok	0.39
529	ok	0.67
530	ok	0.38
531	ok	0.67
532	ok	0.38
533	ok	0.66
534	ok	0.38
535	ok	0.66
536	ok	0.38
537	ok	0.65

538	ok	0.38
539	ok	0.64
540	ok	0.37
541	ok	0.64
542	ok	0.37
543	ok	0.64
544	ok	0.38
545	ok	0.65
546	ok	0.38
547	ok	0.66
548	ok	0.38
549	ok	0.66
550	ok	0.38
551	ok	0.67
552	ok	0.38
553	ok	0.67
554	ok	0.39
555	ok	0.67
556	ok	0.40
557	ok	0.67
558	ok	0.39
559	ok	0.66
560	ok	0.36
561	ok	0.65
562	ok	0.69
563	ok	1.57
564	ok	0.88
565	ok	0.87
566	ok	0.89
567	ok	1.00
568	ok	1.13
569	ok	1.15
570	ok	1.23
571	ok	1.20
572	ok	1.25
573	ok	1.22
574	ok	1.26
575	ok	1.24
576	ok	1.27
577	ok	1.24
578	ok	1.27
579	ok	1.23
580	ok	1.27
581	ok	1.24
582	ok	1.27
583	ok	1.24
584	ok	1.27
585	ok	1.24
586	ok	1.27
587	ok	1.25
588	ok	1.27
589	ok	1.25
590	ok	1.28
591	ok	1.25
592	ok	1.28
593	ok	1.25
594	ok	1.28
595	ok	1.25
596	ok	1.28
597	ok	1.24
598	ok	1.28
599	ok	1.25
600	ok	1.28
601	ok	1.25
602	ok	1.27
603	ok	1.23
604	ok	1.26
605	ok	1.21
606	ok	1.24
607	ok	1.16
608	ok	1.14
609	ok	0.99
610	ok	0.89
611	ok	0.87

Nodo	**Max tau**	**Ver V pr**	**Ver V sec**	**Af V pr**	**Af V sec**	**V pr**	**V sec**
	4.46	0.09	0.18	2.34	4.52	73.50	141.77

Nodo	Stato	V 6.50	V 6.53	Beta	f. a fon	f. Uout	Aw tot	Asw,min	n. x serie	n.ser 0(R)	n.ser 90	Rif. cmb
							cm2	cm2				
49	ok	0.01	0.03	1.64	2.00	0.0	0.0	0.0	0	0	0	115
59	ok	0.06	0.05	1.03	2.00	0.0	0.0	0.0	0	0	0	10
71	ok	0.06	0.05	1.02	2.00	0.0	0.0	0.0	0	0	0	10
83	ok	0.05	0.05	1.03	2.00	0.0	0.0	0.0	0	0	0	10
93	ok	0.01	0.03	1.64	2.00	0.0	0.0	0.0	0	0	0	105

Macro Guscio	Spessore	Id Materiale	Id Criterio	Progettazione
	cm			
26	15.00	1	1	Singolo elemento

Nodo	Stato	x/d	V N/M	ver. rid	Af pr-	Af pr+	Af sec-	Af sec+	N x	N y	N xy	M x	M y	M xy
									kN/ m	kN/ m	kN/ m	kN	kN	kN
947	ok	0.23	0.3	2.32e-03	4.7	4.7	4.7	4.7	-3.8	4.1	2.9	4.8	0.5	-2.52e-02
948	ok	0.23	0.2	2.80e-03	4.7	4.7	4.7	4.7	-6.8	-0.9	-0.2	3.7	0.9	-0.5
949	ok	0.23	0.2	3.01e-03	4.7	4.7	4.7	4.7	-1.9	3.7	2.6	3.5	0.7	-0.1
950	ok	0.23	0.2	2.47e-03	4.7	4.7	4.7	4.7	-5.2	-0.8	1.0	-3.3	-0.5	-0.3
951	ok	0.23	0.2	2.36e-03	4.7	4.7	4.7	4.7	0.7	4.3	2.7	3.8	0.8	-0.1
952	ok	0.23	0.2	2.28e-03	4.7	4.7	4.7	4.7	-4.2	-0.9	1.1	-3.4	-0.5	-0.3
953	ok	0.23	0.2	1.72e-03	4.7	4.7	4.7	4.7	1.1	4.3	2.7	3.8	0.8	-0.1
954	ok	0.23	0.2	2.05e-03	4.7	4.7	4.7	4.7	-2.8	-0.9	1.1	-3.4	-0.5	-0.3
955	ok	0.23	0.2	1.26e-03	4.7	4.7	4.7	4.7	1.5	4.0	2.7	3.8	0.8	-0.2
956	ok	0.23	0.2	2.06e-03	4.7	4.7	4.7	4.7	-1.2	-1.0	1.0	-3.9	-0.5	-0.3
957	ok	0.23	0.2	9.63e-04	4.7	4.7	4.7	4.7	1.5	4.0	2.7	4.2	0.8	2.05e-02
958	ok	0.23	0.2	1.94e-03	4.7	4.7	4.7	4.7	-1.3	-2.1	1.9	-3.6	-0.5	-0.4
959	ok	0.23	0.2	1.04e-03	4.7	4.7	4.7	4.7	2.1	4.0	2.9	3.7	0.8	-0.2
960	ok	0.23	0.2	2.11e-03	4.7	4.7	4.7	4.7	-1.5	-1.1	1.1	-3.6	-0.5	-0.3
961	ok	0.23	0.2	1.10e-03	4.7	4.7	4.7	4.7	1.3	4.2	2.8	3.8	0.8	-0.1
962	ok	0.23	0.2	2.19e-03	4.7	4.7	4.7	4.7	-1.7	-1.1	1.1	-3.6	-0.5	-0.3
963	ok	0.23	0.2	1.01e-03	4.7	4.7	4.7	4.7	1.1	4.2	2.7	3.8	0.8	-0.1
964	ok	0.23	0.2	2.07e-03	4.7	4.7	4.7	4.7	-1.3	-1.0	1.1	-3.7	-0.5	-0.3
965	ok	0.23	0.2	9.07e-04	4.7	4.7	4.7	4.7	2.0	4.0	2.7	3.8	0.8	-0.2
966	ok	0.23	0.2	1.95e-03	4.7	4.7	4.7	4.7	-0.2	-0.9	1.0	-3.7	-0.5	-0.3
967	ok	0.23	0.2	6.54e-04	4.7	4.7	4.7	4.7	3.7	3.7	2.7	3.8	0.8	-0.2
968	ok	0.23	0.2	1.90e-03	4.7	4.7	4.7	4.7	1.0	-1.0	0.9	-4.1	-0.6	-0.3
969	ok	0.23	0.2	4.80e-04	4.7	4.7	4.7	4.7	3.6	3.7	-2.6	4.1	0.8	-1.21e-02
970	ok	0.23	0.2	1.89e-03	4.7	4.7	4.7	4.7	1.2	-1.0	-0.9	-4.1	-0.6	0.3
971	ok	0.23	0.2	6.38e-04	4.7	4.7	4.7	4.7	3.9	3.8	-2.7	3.8	0.8	0.2
972	ok	0.23	0.2	1.95e-03	4.7	4.7	4.7	4.7	0.3	-1.0	1.1	-3.7	-0.6	-0.3
973	ok	0.23	0.2	8.88e-04	4.7	4.7	4.7	4.7	2.1	4.1	-2.7	3.8	0.8	0.2
974	ok	0.23	0.2	2.06e-03	4.7	4.7	4.7	4.7	7.54e-02	-1.0	1.1	-3.7	-0.6	-0.3
975	ok	0.23	0.2	9.75e-04	4.7	4.7	4.7	4.7	1.4	4.3	-2.7	3.9	0.8	0.1
976	ok	0.23	0.2	2.16e-03	4.7	4.7	4.7	4.7	2.45e-02	-0.9	1.1	-3.7	-0.6	-0.3
977	ok	0.23	0.2	1.05e-03	4.7	4.7	4.7	4.7	1.6	4.2	-2.8	3.8	0.8	0.1
978	ok	0.23	0.2	2.08e-03	4.7	4.7	4.7	4.7	0.3	-0.8	1.1	-3.6	-0.5	-0.3
979	ok	0.23	0.2	9.96e-04	4.7	4.7	4.7	4.7	2.4	4.1	-2.9	3.8	0.8	0.2
980	ok	0.23	0.2	1.94e-03	4.7	4.7	4.7	4.7	0.9	-0.8	1.0	-4.0	-0.6	-0.3
981	ok	0.23	0.2	9.24e-04	4.7	4.7	4.7	4.7	1.7	4.0	-2.7	4.3	0.9	-2.46e-02
982	ok	0.23	0.2	2.06e-03	4.7	4.7	4.7	4.7	-1.0	-1.0	-1.0	-3.9	-0.5	0.3
983	ok	0.23	0.2	1.25e-03	4.7	4.7	4.7	4.7	2.3	4.1	-2.7	3.9	0.8	0.2
984	ok	0.23	0.2	2.06e-03	4.7	4.7	4.7	4.7	-2.6	-1.0	1.2	-3.5	-0.5	-0.2
985	ok	0.23	0.2	1.82e-03	4.7	4.7	4.7	4.7	1.1	4.4	-2.7	3.9	0.8	0.1
986	ok	0.23	0.2	2.26e-03	4.7	4.7	4.7	4.7	-4.1	-1.0	1.3	-3.5	-0.5	-0.2
987	ok	0.23	0.2	2.43e-03	4.7	4.7	4.7	4.7	0.6	4.3	-2.7	3.8	0.8	0.1
988	ok	0.23	0.2	2.47e-03	4.7	4.7	4.7	4.7	-5.1	-0.8	-1.0	-3.3	-0.5	0.3
989	ok	0.23	0.2	3.02e-03	4.7	4.7	4.7	4.7	-1.9	3.7	-2.6	3.6	0.7	0.1
990	ok	0.23	0.2	2.82e-03	4.7	4.7	4.7	4.7	1.8	-2.4	1.8	-4.4	-0.6	-0.3
991	ok	0.23	0.3	2.33e-03	4.7	4.7	4.7	4.7	-3.9	4.1	-2.9	4.8	0.5	2.33e-02
992	ok	0.23	0.2	2.83e-03	4.7	4.7	4.7	4.7	-1.2	6.6	2.1	3.7	0.8	3.35e-02
993	ok	0.23	0.2	1.79e-03	4.7	4.7	4.7	4.7	-0.8	1.1	-0.7	-2.5	-0.6	-0.4
994	ok	0.23	0.2	2.27e-03	4.7	4.7	4.7	4.7	-2.7	3.4	-0.1	2.9	0.6	-0.2
995	ok	0.23	0.2	1.60e-03	4.7	4.7	4.7	4.7	-0.9	0.9	-0.6	-2.7	-0.6	-0.4
996	ok	0.23	0.2	2.33e-03	4.7	4.7	4.7	4.7	-2.6	3.8	-0.8	3.1	0.7	-0.2
997	ok	0.23	0.2	1.59e-03	4.7	4.7	4.7	4.7	-0.3	0.8	-1.1	-2.8	-0.6	-0.4
998	ok	0.23	0.2	2.37e-03	4.7	4.7	4.7	4.7	-2.0	3.8	-1.1	3.1	0.7	-0.2
999	ok	0.23	0.2	1.65e-03	4.7	4.7	4.7	4.7	0.5	0.9	-1.3	-2.8	-0.6	-0.4
1000	ok	0.23	0.2	2.09e-03	4.7	4.7	4.7	4.7	-1.4	3.6	-0.7	3.0	0.7	-0.2
1001	ok	0.23	0.2	1.45e-03	4.7	4.7	4.7	4.7	1.2	1.0	-1.1	-2.9	-0.6	-0.4
1002	ok	0.23	0.2	2.18e-03	4.7	4.7	4.7	4.7	-0.5	-0.2	0.4	3.1	0.6	-0.1
1003	ok	0.23	0.2	1.41e-03	4.7	4.7	4.7	4.7	1.4	-0.3	6.40e-02	-2.9	-0.6	-0.5
1004	ok	0.23	0.2	2.04e-03	4.7	4.7	4.7	4.7	-1.1	3.5	-0.3	3.1	0.7	-0.2
1005	ok	0.23	0.2	1.58e-03	4.7	4.7	4.7	4.7	2.3	1.7	-0.4	-3.0	-0.6	0.4

1006	ok	0.23	0.2	2.33e-03	4.7	4.7	4.7	4.7	-1.0	3.5	-0.8	3.1	0.7	-0.2
1007	ok	0.23	0.2	1.53e-03	4.7	4.7	4.7	4.7	2.2	1.6	-0.5	-3.0	-0.6	0.4
1008	ok	0.23	0.2	2.30e-03	4.7	4.7	4.7	4.7	-0.8	3.4	-1.3	3.1	0.7	-0.2
1009	ok	0.23	0.2	1.55e-03	4.7	4.7	4.7	4.7	1.1	1.5	0.2	-3.0	-0.6	-0.4
1010	ok	0.23	0.2	2.32e-03	4.7	4.7	4.7	4.7	-0.4	3.3	-1.4	3.1	0.7	-0.2
1011	ok	0.23	0.2	1.55e-03	4.7	4.7	4.7	4.7	1.7	1.7	4.31e-02	-3.0	-0.6	-0.4
1012	ok	0.23	0.2	1.99e-03	4.7	4.7	4.7	4.7	0.5	3.2	0.2	3.0	0.7	0.2
1013	ok	0.23	0.2	1.38e-03	4.7	4.7	4.7	4.7	3.2	-0.3	-0.1	-3.0	-0.7	0.5
1014	ok	0.23	0.2	2.08e-03	4.7	4.7	4.7	4.7	0.6	2.6	0.6	3.0	0.7	5.40e-02
1015	ok	0.23	0.2	1.39e-03	4.7	4.7	4.7	4.7	3.4	1.1	1.1	-3.0	-0.6	0.4
1016	ok	0.23	0.2	2.00e-03	4.7	4.7	4.7	4.7	0.1	3.2	0.9	3.0	0.7	0.2
1017	ok	0.23	0.2	1.55e-03	4.7	4.7	4.7	4.7	3.0	1.0	1.3	-3.0	-0.6	0.4
1018	ok	0.23	0.2	2.32e-03	4.7	4.7	4.7	4.7	-0.3	3.4	1.4	3.1	0.7	0.2
1019	ok	0.23	0.2	1.54e-03	4.7	4.7	4.7	4.7	2.5	0.7	1.1	-3.0	-0.6	0.4
1020	ok	0.23	0.2	2.30e-03	4.7	4.7	4.7	4.7	-0.7	3.5	1.3	3.2	0.7	0.2
1021	ok	0.23	0.2	1.53e-03	4.7	4.7	4.7	4.7	2.2	0.7	0.8	-3.0	-0.6	0.4
1022	ok	0.23	0.2	2.33e-03	4.7	4.7	4.7	4.7	-0.9	3.5	0.8	3.2	0.7	0.2
1023	ok	0.23	0.2	1.57e-03	4.7	4.7	4.7	4.7	1.8	0.8	0.5	-3.0	-0.6	0.4
1024	ok	0.23	0.2	2.04e-03	4.7	4.7	4.7	4.7	-1.0	3.5	0.3	3.1	0.7	0.2
1025	ok	0.23	0.2	1.40e-03	4.7	4.7	4.7	4.7	1.5	-0.4	-3.62e-02	-2.9	-0.6	0.5
1026	ok	0.23	0.2	2.20e-03	4.7	4.7	4.7	4.7	-0.3	-0.2	-0.4	3.1	0.6	0.1
1027	ok	0.23	0.2	1.46e-03	4.7	4.7	4.7	4.7	1.3	1.0	1.2	-2.9	-0.6	0.4
1028	ok	0.23	0.2	2.10e-03	4.7	4.7	4.7	4.7	-1.3	3.6	0.8	3.1	0.7	0.2
1029	ok	0.23	0.2	1.65e-03	4.7	4.7	4.7	4.7	0.7	0.9	1.3	-2.8	-0.6	0.4
1030	ok	0.23	0.2	2.38e-03	4.7	4.7	4.7	4.7	-2.0	3.8	1.2	3.2	0.7	0.2
1031	ok	0.23	0.2	1.59e-03	4.7	4.7	4.7	4.7	-0.2	0.8	1.1	-2.8	-0.6	0.4
1032	ok	0.23	0.2	2.32e-03	4.7	4.7	4.7	4.7	-2.5	3.8	0.9	3.1	0.7	0.2
1033	ok	0.23	0.2	1.60e-03	4.7	4.7	4.7	4.7	-0.9	0.9	0.6	-2.7	-0.6	0.4
1034	ok	0.23	0.2	2.27e-03	4.7	4.7	4.7	4.7	-2.7	3.4	0.1	3.0	0.7	0.2
1035	ok	0.23	0.2	1.79e-03	4.7	4.7	4.7	4.7	2.2	-1.1	0.2	-3.3	-0.6	-0.2
1036	ok	0.23	0.2	2.83e-03	4.7	4.7	4.7	4.7	-1.2	6.5	-2.1	3.8	0.8	-3.41e-02
1037	ok	0.23	0.2	4.37e-03	4.7	4.7	4.7	4.7	-0.8	4.8	2.2	2.9	0.6	-2.81e-02
1038	ok	0.23	0.1	2.20e-03	4.7	4.7	4.7	4.7	-1.4	2.7	1.5	-1.9	-0.5	-0.4
1039	ok	0.23	0.1	3.43e-03	4.7	4.7	4.7	4.7	-0.6	2.7	1.7	2.2	0.4	-0.1
1040	ok	0.23	0.1	1.90e-03	4.7	4.7	4.7	4.7	-1.3	1.8	0.8	-2.1	-0.5	-0.4
1041	ok	0.23	0.1	3.56e-03	4.7	4.7	4.7	4.7	-0.5	2.1	1.1	2.3	0.5	-0.1
1042	ok	0.23	0.1	1.98e-03	4.7	4.7	4.7	4.7	-1.2	1.8	0.3	-2.1	-0.5	-0.4
1043	ok	0.23	0.1	3.62e-03	4.7	4.7	4.7	4.7	-0.2	2.0	0.9	2.4	0.5	-0.1
1044	ok	0.23	0.1	2.02e-03	4.7	4.7	4.7	4.7	-0.7	1.6	-5.92e-03	-2.2	-0.5	-0.4
1045	ok	0.23	0.1	3.33e-03	4.7	4.7	4.7	4.7	0.1	2.2	1.2	2.3	0.5	-0.1
1046	ok	0.23	0.1	1.85e-03	4.7	4.7	4.7	4.7	1.0	-0.2	-2.2	-2.2	-0.5	0.4
1047	ok	0.23	0.1	3.34e-03	4.7	4.7	4.7	4.7	0.5	2.1	1.6	2.4	0.5	-0.1
1048	ok	0.23	0.1	1.81e-03	4.7	4.7	4.7	4.7	-0.2	1.7	0.7	-2.2	-0.5	-0.4
1049	ok	0.23	0.1	3.35e-03	4.7	4.7	4.7	4.7	0.7	1.9	1.7	2.4	0.5	-0.2
1050	ok	0.23	0.1	1.99e-03	4.7	4.7	4.7	4.7	1.7	1.7	-0.5	-2.3	-0.5	0.4
1051	ok	0.23	0.1	3.65e-03	4.7	4.7	4.7	4.7	1.0	1.6	1.3	2.4	0.5	-0.2
1052	ok	0.23	0.1	1.97e-03	4.7	4.7	4.7	4.7	1.6	1.5	-0.6	-2.3	-0.5	0.4
1053	ok	0.23	0.1	3.66e-03	4.7	4.7	4.7	4.7	1.3	1.5	0.8	2.4	0.5	-0.2
1054	ok	0.23	0.1	1.99e-03	4.7	4.7	4.7	4.7	0.5	1.4	0.2	-2.3	-0.5	-0.4
1055	ok	0.23	0.1	3.65e-03	4.7	4.7	4.7	4.7	1.6	1.8	0.7	2.3	0.5	-0.2
1056	ok	0.23	0.1	1.99e-03	4.7	4.7	4.7	4.7	0.9	1.6	-3.76e-02	-2.3	-0.5	-0.4
1057	ok	0.23	0.1	3.30e-03	4.7	4.7	4.7	4.7	1.9	2.2	1.0	2.3	0.4	-0.2
1058	ok	0.23	0.1	1.78e-03	4.7	4.7	4.7	4.7	0.9	-0.3	-1.6	-2.3	-0.5	0.4
1059	ok	0.23	0.1	3.25e-03	4.7	4.7	4.7	4.7	2.1	2.3	1.6	2.3	0.4	-0.2
1060	ok	0.23	0.1	1.78e-03	4.7	4.7	4.7	4.7	1.5	1.7	0.8	-2.3	-0.5	-0.4
1061	ok	0.23	0.1	3.31e-03	4.7	4.7	4.7	4.7	2.2	2.1	1.8	2.2	0.4	-0.2
1062	ok	0.23	0.1	2.00e-03	4.7	4.7	4.7	4.7	1.0	1.6	6.70e-03	-2.3	-0.5	0.4
1063	ok	0.23	0.1	3.66e-03	4.7	4.7	4.7	4.7	2.4	1.8	1.6	2.2	0.4	-0.2
1064	ok	0.23	0.1	1.99e-03	4.7	4.7	4.7	4.7	0.6	1.4	-0.2	-2.3	-0.5	0.4
1065	ok	0.23	0.1	3.67e-03	4.7	4.7	4.7	4.7	2.5	1.8	1.3	2.2	0.4	-0.2
1066	ok	0.23	0.1	1.98e-03	4.7	4.7	4.7	4.7	1.6	1.5	0.6	-2.3	-0.5	-0.4
1067	ok	0.23	0.1	3.67e-03	4.7	4.7	4.7	4.7	2.5	2.0	1.3	2.1	0.4	-0.2
1068	ok	0.23	0.1	1.99e-03	4.7	4.7	4.7	4.7	1.6	1.7	0.5	-2.3	-0.5	-0.4
1069	ok	0.23	0.1	3.36e-03	4.7	4.7	4.7	4.7	2.4	2.4	1.8	2.0	0.4	-0.1
1070	ok	0.23	0.1	1.81e-03	4.7	4.7	4.7	4.7	-0.6	-0.3	-1.5	-2.2	-0.5	0.4
1071	ok	0.23	0.1	3.35e-03	4.7	4.7	4.7	4.7	-0.2	-1.9	-0.2	2.4	0.5	0.1
1072	ok	0.23	0.1	1.86e-03	4.7	4.7	4.7	4.7	-0.8	-0.7	-1.7	-2.2	-0.5	0.4
1073	ok	0.23	0.1	3.35e-03	4.7	4.7	4.7	4.7	-0.5	-1.6	0.3	2.4	0.5	0.1
1074	ok	0.23	0.1	2.03e-03	4.7	4.7	4.7	4.7	-0.7	1.6	2.86e-02	-2.2	-0.5	0.4
1075	ok	0.23	0.1	3.64e-03	4.7	4.7	4.7	4.7	-0.7	-1.6	0.7	2.4	0.4	0.1
1076	ok	0.23	0.1	2.00e-03	4.7	4.7	4.7	4.7	-1.1	1.7	-0.2	-2.1	-0.5	0.4
1077	ok	0.23	0.1	3.57e-03	4.7	4.7	4.7	4.7	-0.5	2.1	-1.1	2.4	0.5	0.1
1078	ok	0.23	0.1	1.89e-03	4.7	4.7	4.7	4.7	-1.3	1.8	-0.7	-2.1	-0.5	0.4
1079	ok	0.23	0.1	3.43e-03	4.7	4.7	4.7	4.7	-0.6	2.7	-1.7	2.3	0.5	0.1
1080	ok	0.23	0.1	2.20e-03	4.7	4.7	4.7	4.7	0.8	-1.6	0.1	-2.5	-0.6	-0.3
1081	ok	0.23	0.2	4.36e-03	4.7	4.7	4.7	4.7	-0.9	4.8	-2.2	2.9	0.6	2.76e-02
1082	ok	0.23	0.1	4.37e-03	4.7	4.7	4.7	4.7	-1.2	4.0	3.2	2.1	0.4	1.08e-02
1083	ok	0.23	0.1	2.17e-03	4.7	4.7	4.7	4.7	-0.9	3.4	3.3	-1.4	-0.3	-0.3

1084	ok	0.23	8.91e-02	3.32e-03	4.7	4.7	4.7	4.7	-1.33e-02	1.8	3.0	1.6	0.3	-0.1
1085	ok	0.23	9.36e-02	2.03e-03	4.7	4.7	4.7	4.7	-0.9	-1.0	3.0	-1.5	-0.4	-0.4
1086	ok	0.23	9.28e-02	3.51e-03	4.7	4.7	4.7	4.7	1.93e-02	1.3	2.4	1.7	0.3	-0.1
1087	ok	0.23	0.1	2.13e-03	4.7	4.7	4.7	4.7	-0.9	-1.1	2.4	-1.5	-0.4	-0.4
1088	ok	0.23	9.31e-02	3.55e-03	4.7	4.7	4.7	4.7	0.1	1.3	2.1	1.7	0.3	-0.1
1089	ok	0.23	0.1	2.17e-03	4.7	4.7	4.7	4.7	-0.8	-0.9	2.0	-1.6	-0.4	-0.4
1090	ok	0.23	9.35e-02	3.34e-03	4.7	4.7	4.7	4.7	0.2	1.5	2.3	1.7	0.3	-0.1
1091	ok	0.23	0.1	2.00e-03	4.7	4.7	4.7	4.7	-0.7	-0.9	2.2	-1.6	-0.4	-0.4
1092	ok	0.23	9.48e-02	3.35e-03	4.7	4.7	4.7	4.7	0.4	1.6	2.7	1.7	0.3	-0.1
1093	ok	0.23	0.1	1.95e-03	4.7	4.7	4.7	4.7	-0.6	-1.0	2.7	-1.6	-0.4	-0.4
1094	ok	0.23	9.53e-02	3.33e-03	4.7	4.7	4.7	4.7	0.6	1.3	2.9	1.7	0.3	-0.1
1095	ok	0.23	0.1	2.12e-03	4.7	4.7	4.7	4.7	1.2	-1.1	-1.7	-1.6	-0.4	0.4
1096	ok	0.23	9.57e-02	3.57e-03	4.7	4.7	4.7	4.7	1.0	1.0	2.7	1.7	0.3	-0.1
1097	ok	0.23	0.1	2.11e-03	4.7	4.7	4.7	4.7	-0.2	-1.4	2.6	-1.7	-0.4	-0.4
1098	ok	0.23	9.62e-02	3.58e-03	4.7	4.7	4.7	4.7	1.2	0.9	2.2	1.7	0.3	-0.2
1099	ok	0.23	0.1	2.17e-03	4.7	4.7	4.7	4.7	9.43e-03	-1.3	1.9	-1.7	-0.4	-0.4
1100	ok	0.23	9.59e-02	3.55e-03	4.7	4.7	4.7	4.7	1.5	1.1	2.0	1.7	0.3	-0.2
1101	ok	0.23	0.1	2.18e-03	4.7	4.7	4.7	4.7	0.2	-1.1	1.6	-1.7	-0.4	-0.4
1102	ok	0.23	9.55e-02	3.30e-03	4.7	4.7	4.7	4.7	1.6	1.5	2.2	1.7	0.3	-0.2
1103	ok	0.23	0.1	1.97e-03	4.7	4.7	4.7	4.7	0.7	-1.0	-2.7	-1.7	-0.4	0.4
1104	ok	0.23	9.65e-02	3.26e-03	4.7	4.7	4.7	4.7	1.9	1.6	2.8	1.6	0.3	-0.2
1105	ok	0.23	0.1	1.97e-03	4.7	4.7	4.7	4.7	0.4	-1.1	-1.5	-1.7	-0.4	0.4
1106	ok	0.23	9.62e-02	3.31e-03	4.7	4.7	4.7	4.7	2.0	1.4	3.1	1.6	0.3	-0.1
1107	ok	0.23	0.1	2.18e-03	4.7	4.7	4.7	4.7	0.2	-1.1	-1.7	-1.7	-0.4	0.4
1108	ok	0.23	9.70e-02	3.56e-03	4.7	4.7	4.7	4.7	2.3	1.1	3.1	1.6	0.3	-0.2
1109	ok	0.23	0.1	2.17e-03	4.7	4.7	4.7	4.7	-7.12e-03	-1.3	-1.9	-1.7	-0.4	0.4
1110	ok	0.23	9.74e-02	3.60e-03	4.7	4.7	4.7	4.7	2.4	1.1	2.8	1.6	0.3	-0.2
1111	ok	0.23	0.1	2.12e-03	4.7	4.7	4.7	4.7	-0.2	-1.4	-2.6	-1.7	-0.4	0.4
1112	ok	0.23	9.70e-02	3.59e-03	4.7	4.7	4.7	4.7	2.5	1.3	2.7	1.5	0.3	-0.1
1113	ok	0.23	0.1	2.13e-03	4.7	4.7	4.7	4.7	-0.5	-1.2	-2.9	-1.6	-0.4	0.4
1114	ok	0.23	9.67e-02	3.35e-03	4.7	4.7	4.7	4.7	2.4	1.6	3.1	1.5	0.3	-0.1
1115	ok	0.23	0.1	1.95e-03	4.7	4.7	4.7	4.7	-0.6	-1.0	-2.7	-1.6	-0.4	0.4
1116	ok	0.23	9.63e-02	3.36e-03	4.7	4.7	4.7	4.7	2.3	1.8	3.7	1.4	0.3	-0.1
1117	ok	0.23	0.1	2.02e-03	4.7	4.7	4.7	4.7	-0.7	-0.9	-2.2	-1.6	-0.4	0.4
1118	ok	0.23	9.50e-02	3.36e-03	4.7	4.7	4.7	4.7	2.2	1.6	4.1	1.4	0.3	-0.1
1119	ok	0.23	0.1	2.19e-03	4.7	4.7	4.7	4.7	-0.9	-1.0	-2.0	-1.6	-0.4	0.4
1120	ok	0.23	9.45e-02	3.57e-03	4.7	4.7	4.7	4.7	2.0	1.3	3.8	1.3	0.2	-0.1
1121	ok	0.23	0.1	2.14e-03	4.7	4.7	4.7	4.7	-0.9	-1.1	-2.3	-1.5	-0.4	0.4
1122	ok	0.23	9.42e-02	3.52e-03	4.7	4.7	4.7	4.7	0.2	1.9	-1.8	1.7	0.3	0.1
1123	ok	0.23	9.38e-02	2.02e-03	4.7	4.7	4.7	4.7	-0.9	-1.0	-3.0	-1.5	-0.4	0.4
1124	ok	0.23	9.04e-02	3.32e-03	4.7	4.7	4.7	4.7	0.2	2.6	-2.2	1.6	0.3	0.1
1125	ok	0.23	0.1	2.16e-03	4.7	4.7	4.7	4.7	0.8	-1.4	0.6	-1.8	-0.4	-0.2
1126	ok	0.23	0.1	4.36e-03	4.7	4.7	4.7	4.7	-1.2	4.1	-3.2	2.1	0.4	-1.14e-02
1127	ok	0.23	6.34e-02	2.62e-03	4.7	4.7	4.7	4.7	-1.3	4.6	3.0	1.2	0.5	-5.86e-02
1128	ok	0.23	6.30e-02	1.98e-03	4.7	4.7	4.7	4.7	0.8	2.6	3.3	-0.8	-0.3	-0.3
1129	ok	0.23	5.02e-02	2.29e-03	4.7	4.7	4.7	4.7	0.3	1.2	3.6	0.9	0.1	-0.2
1130	ok	0.23	6.46e-02	1.92e-03	4.7	4.7	4.7	4.7	0.1	-0.5	3.5	-0.8	-0.3	-0.3
1131	ok	0.23	5.13e-02	2.29e-03	4.7	4.7	4.7	4.7	1.44e-02	1.2	3.0	0.9	0.1	-0.2
1132	ok	0.23	7.04e-02	2.06e-03	4.7	4.7	4.7	4.7	-7.22e-02	-0.4	2.8	-0.8	-0.4	-0.3
1133	ok	0.23	5.16e-02	2.45e-03	4.7	4.7	4.7	4.7	0.1	1.3	2.6	0.9	0.1	-0.2
1134	ok	0.23	7.28e-02	2.15e-03	4.7	4.7	4.7	4.7	-0.1	-0.4	2.4	-0.8	-0.4	-0.3
1135	ok	0.23	5.20e-02	2.45e-03	4.7	4.7	4.7	4.7	0.2	1.5	2.7	0.9	0.1	-0.2
1136	ok	0.23	7.37e-02	2.04e-03	4.7	4.7	4.7	4.7	-8.69e-02	-0.4	2.6	-0.9	-0.4	-0.3
1137	ok	0.23	5.27e-02	2.33e-03	4.7	4.7	4.7	4.7	0.3	1.6	3.1	0.9	0.1	-0.2
1138	ok	0.23	7.35e-02	1.98e-03	4.7	4.7	4.7	4.7	4.11e-04	-0.4	3.1	-0.9	-0.4	-0.3
1139	ok	0.23	5.30e-02	2.42e-03	4.7	4.7	4.7	4.7	0.4	1.5	3.4	0.9	0.1	-0.2
1140	ok	0.23	7.28e-02	2.09e-03	4.7	4.7	4.7	4.7	0.2	-0.5	3.3	-0.9	-0.4	-0.3
1141	ok	0.23	5.35e-02	2.44e-03	4.7	4.7	4.7	4.7	0.7	1.3	3.3	0.9	0.1	-0.2
1142	ok	0.23	7.36e-02	2.03e-03	4.7	4.7	4.7	4.7	0.5	-0.6	2.9	-0.9	-0.4	-0.3
1143	ok	0.23	5.39e-02	2.36e-03	4.7	4.7	4.7	4.7	1.0	1.2	2.9	0.9	0.1	-0.2
1144	ok	0.23	7.43e-02	2.14e-03	4.7	4.7	4.7	4.7	1.7	-0.6	-3.3	-0.9	-0.4	0.3
1145	ok	0.23	5.36e-02	2.53e-03	4.7	4.7	4.7	4.7	1.2	1.3	2.6	0.9	0.1	-0.2
1146	ok	0.23	7.41e-02	2.18e-03	4.7	4.7	4.7	4.7	1.4	-0.5	-3.5	-0.9	-0.4	0.3
1147	ok	0.23	5.34e-02	2.48e-03	4.7	4.7	4.7	4.7	1.3	1.5	2.7	0.9	0.1	-0.2
1148	ok	0.23	7.31e-02	2.02e-03	4.7	4.7	4.7	4.7	1.1	-0.4	-3.1	-0.9	-0.4	0.3
1149	ok	0.23	5.39e-02	2.31e-03	4.7	4.7	4.7	4.7	1.5	1.6	3.3	0.9	0.1	-0.2
1150	ok	0.23	7.30e-02	2.03e-03	4.7	4.7	4.7	4.7	1.1	-0.5	3.1	-0.9	-0.4	-0.3
1151	ok	0.23	5.36e-02	2.49e-03	4.7	4.7	4.7	4.7	1.6	1.5	3.7	0.8	9.61e-02	-0.2
1152	ok	0.23	7.39e-02	2.18e-03	4.7	4.7	4.7	4.7	0.7	-0.5	-2.2	-0.9	-0.4	0.3
1153	ok	0.23	5.38e-02	2.53e-03	4.7	4.7	4.7	4.7	1.9	1.3	3.7	0.8	8.42e-02	-0.2
1154	ok	0.23	7.40e-02	2.14e-03	4.7	4.7	4.7	4.7	0.5	-0.6	-2.4	-0.9	-0.4	0.3
1155	ok	0.23	5.42e-02	2.36e-03	4.7	4.7	4.7	4.7	2.1	1.2	3.5	0.8	7.71e-02	-0.2
1156	ok	0.23	7.33e-02	2.05e-03	4.7	4.7	4.7	4.7	0.3	-0.7	-2.9	-0.9	-0.4	0.3
1157	ok	0.23	5.38e-02	2.46e-03	4.7	4.7	4.7	4.7	2.3	1.3	3.3	0.8	7.15e-02	-0.2
1158	ok	0.23	7.26e-02	2.10e-03	4.7	4.7	4.7	4.7	8.09e-02	-0.6	-3.3	-0.9	-0.4	0.3
1159	ok	0.23	5.34e-02	2.44e-03	4.7	4.7	4.7	4.7	2.3	1.5	3.6	0.7	6.71e-02	-0.2
1160	ok	0.23	7.34e-02	1.99e-03	4.7	4.7	4.7	4.7	-0.1	-0.5	-3.1	-0.9	-0.4	0.3
1161	ok	0.23	5.32e-02	2.35e-03	4.7	4.7	4.7	4.7	2.2	1.6	4.2	0.7	6.51e-02	-0.2

1162	ok	0.23	7.37e-02	2.06e-03	4.7	4.7	4.7	4.7	-0.2	-0.4	-2.6	-0.9	-0.4	0.3
1163	ok	0.23	5.25e-02	2.47e-03	4.7	4.7	4.7	4.7	2.2	1.6	4.7	0.7	5.33e-02	-0.2
1164	ok	0.23	7.27e-02	2.17e-03	4.7	4.7	4.7	4.7	-0.2	-0.4	-2.4	-0.8	-0.4	0.3
1165	ok	0.23	5.21e-02	2.46e-03	4.7	4.7	4.7	4.7	2.1	1.2	4.5	0.6	3.90e-02	-0.2
1166	ok	0.23	7.03e-02	2.07e-03	4.7	4.7	4.7	4.7	-0.1	-0.3	-2.8	-0.8	-0.4	0.3
1167	ok	0.23	5.18e-02	2.29e-03	4.7	4.7	4.7	4.7	1.9	1.1	3.6	0.6	1.60e-02	-0.2
1168	ok	0.23	6.45e-02	1.92e-03	4.7	4.7	4.7	4.7	7.92e-02	-0.5	-3.5	-0.8	-0.3	0.3
1169	ok	0.23	5.07e-02	2.29e-03	4.7	4.7	4.7	4.7	0.9	2.6	-2.5	-0.5	-0.1	0.1
1170	ok	0.23	6.31e-02	1.98e-03	4.7	4.7	4.7	4.7	1.7	-0.1	1.8	-1.0	-0.4	-0.1
1171	ok	0.23	6.40e-02	2.61e-03	4.7	4.7	4.7	4.7	-1.3	4.6	-3.0	1.2	0.5	5.79e-02
1172	ok	0.23	4.39e-02	1.15e-03	4.7	4.7	4.7	4.7	5.3	6.2	0.2	0.2	0.2	-0.1
1173	ok	0.23	3.80e-02	2.23e-03	4.7	4.7	4.7	4.7	2.5	1.4	3.5	0.3	0.4	-0.4
1174	ok	0.23	3.11e-02	1.28e-03	4.7	4.7	4.7	4.7	1.4	2.3	4.0	-6.35e-02	0.2	-7.77e-02
1175	ok	0.23	3.17e-02	1.85e-03	4.7	4.7	4.7	4.7	2.7	-0.9	-3.0	-9.90e-02	0.2	0.3
1176	ok	0.23	2.81e-02	1.41e-03	4.7	4.7	4.7	4.7	-0.2	0.8	3.7	-0.3	7.80e-02	-8.72e-02
1177	ok	0.23	3.50e-02	1.75e-03	4.7	4.7	4.7	4.7	2.6	-1.0	-3.9	-9.97e-02	0.2	0.3
1178	ok	0.23	2.95e-02	1.27e-03	4.7	4.7	4.7	4.7	-0.3	0.7	3.3	-0.2	7.65e-02	-9.67e-02
1179	ok	0.23	3.65e-02	1.90e-03	4.7	4.7	4.7	4.7	2.4	-1.0	-4.1	-0.1	0.2	0.3
1180	ok	0.23	3.02e-02	1.30e-03	4.7	4.7	4.7	4.7	-0.6	0.7	3.2	-0.2	7.33e-02	-0.1
1181	ok	0.23	3.61e-02	1.86e-03	4.7	4.7	4.7	4.7	2.1	-1.1	-3.8	-0.1	0.2	0.3
1182	ok	0.23	2.96e-02	1.39e-03	4.7	4.7	4.7	4.7	-0.7	0.7	3.3	-0.2	7.09e-02	-0.1
1183	ok	0.23	3.55e-02	1.75e-03	4.7	4.7	4.7	4.7	1.9	-1.1	-3.2	-0.1	0.2	0.3
1184	ok	0.23	2.96e-02	1.41e-03	4.7	4.7	4.7	4.7	-0.4	0.7	3.6	-0.3	7.43e-02	-0.1
1185	ok	0.23	3.59e-02	1.79e-03	4.7	4.7	4.7	4.7	2.0	-1.1	-2.8	-0.1	0.2	0.3
1186	ok	0.23	3.02e-02	1.29e-03	4.7	4.7	4.7	4.7	-1.20e-04	0.7	3.5	-0.3	7.65e-02	-0.1
1187	ok	0.23	3.62e-02	1.66e-03	4.7	4.7	4.7	4.7	2.0	-1.1	-2.9	-0.2	0.2	0.4
1188	ok	0.23	3.09e-02	1.09e-03	4.7	4.7	4.7	4.7	0.3	0.7	3.2	-0.3	7.78e-02	-0.1
1189	ok	0.23	3.62e-02	1.76e-03	4.7	4.7	4.7	4.7	1.7	-1.1	-3.2	-0.2	0.2	0.4
1190	ok	0.23	3.09e-02	1.05e-03	4.7	4.7	4.7	4.7	0.3	0.7	2.8	-0.3	7.71e-02	-0.1
1191	ok	0.23	3.68e-02	1.87e-03	4.7	4.7	4.7	4.7	1.2	-1.1	-3.3	-0.2	0.2	0.4
1192	ok	0.23	2.96e-02	1.13e-03	4.7	4.7	4.7	4.7	0.2	0.7	2.8	-0.3	7.53e-02	-0.1
1193	ok	0.23	3.64e-02	1.81e-03	4.7	4.7	4.7	4.7	0.8	-1.2	-3.0	-0.2	0.2	0.4
1194	ok	0.23	2.82e-02	1.09e-03	4.7	4.7	4.7	4.7	9.09e-02	0.7	-3.0	-0.2	7.50e-02	0.1
1195	ok	0.23	3.65e-02	1.81e-03	4.7	4.7	4.7	4.7	0.4	-1.2	-2.5	-0.1	0.2	0.4
1196	ok	0.23	2.97e-02	1.11e-03	4.7	4.7	4.7	4.7	7.16e-03	0.7	-2.8	-0.3	7.69e-02	0.1
1197	ok	0.23	3.67e-02	1.87e-03	4.7	4.7	4.7	4.7	1.2	-1.1	3.3	-0.2	0.2	-0.4
1198	ok	0.23	3.08e-02	1.05e-03	4.7	4.7	4.7	4.7	0.1	0.7	-2.8	-0.3	7.88e-02	0.1
1199	ok	0.23	3.61e-02	1.76e-03	4.7	4.7	4.7	4.7	1.7	-1.1	3.2	-0.2	0.2	-0.4
1200	ok	0.23	3.07e-02	1.14e-03	4.7	4.7	4.7	4.7	6.74e-02	0.7	-3.2	-0.3	7.92e-02	0.1
1201	ok	0.23	3.62e-02	1.68e-03	4.7	4.7	4.7	4.7	1.9	-1.1	2.9	-0.1	0.2	-0.3
1202	ok	0.23	3.00e-02	1.34e-03	4.7	4.7	4.7	4.7	-0.2	0.7	-3.5	-0.3	7.74e-02	0.1
1203	ok	0.23	3.57e-02	1.81e-03	4.7	4.7	4.7	4.7	1.9	-1.1	2.8	-0.1	0.2	-0.3
1204	ok	0.23	2.93e-02	1.45e-03	4.7	4.7	4.7	4.7	-0.6	0.7	-3.5	-0.3	7.50e-02	0.1
1205	ok	0.23	3.53e-02	1.77e-03	4.7	4.7	4.7	4.7	1.9	-1.1	3.2	-0.1	0.2	-0.3
1206	ok	0.23	2.94e-02	1.43e-03	4.7	4.7	4.7	4.7	-0.9	0.7	-3.3	-0.2	7.14e-02	0.1
1207	ok	0.23	3.60e-02	1.87e-03	4.7	4.7	4.7	4.7	2.1	-1.1	3.8	-0.1	0.2	-0.3
1208	ok	0.23	3.01e-02	1.33e-03	4.7	4.7	4.7	4.7	-0.8	0.7	-3.1	-0.2	7.39e-02	0.1
1209	ok	0.23	3.64e-02	1.91e-03	4.7	4.7	4.7	4.7	2.3	-1.0	4.2	-0.1	0.2	-0.3
1210	ok	0.23	2.95e-02	1.29e-03	4.7	4.7	4.7	4.7	-0.4	0.7	-3.3	-0.2	7.72e-02	9.88e-02
1211	ok	0.23	3.49e-02	1.76e-03	4.7	4.7	4.7	4.7	2.6	-1.0	3.9	-9.83e-02	0.2	-0.3
1212	ok	0.23	2.80e-02	1.42e-03	4.7	4.7	4.7	4.7	-0.3	0.8	-3.7	-0.2	7.88e-02	8.93e-02
1213	ok	0.23	3.16e-02	1.85e-03	4.7	4.7	4.7	4.7	2.7	-0.9	3.0	-9.77e-02	0.2	-0.3
1214	ok	0.23	3.09e-02	1.29e-03	4.7	4.7	4.7	4.7	1.4	2.3	-4.0	-6.17e-02	0.2	7.96e-02
1215	ok	0.23	3.82e-02	2.23e-03	4.7	4.7	4.7	4.7	2.5	1.4	-3.5	0.3	0.4	0.4
1216	ok	0.23	4.39e-02	1.14e-03	4.7	4.7	4.7	4.7	5.3	6.2	-0.2	0.2	0.2	0.1

Nodo	**x/d**	**V N/M**	**ver. rid**	**Af pr-**	**Af pr+**	**Af sec-**	**Af sec+**	**N x**	**N y**	**N xy**	**M x**	**M y**	**M xy**
								-6.83	-2.40	-4.13	-4.41	-0.65	-0.52
	0.23	0.25	4.37e-03	4.67	4.67	4.67	4.67	5.29	6.56	4.65	4.84	0.86	0.46

Nodo	**Stato**	**Max tau** kN/ m2	**Ver V pr**	**Ver V sec**	**Af V pr**	**Af V sec**	**V pr** kN/ m	**V sec** kN/ m
947	ok	1.86						
948	ok	1.84						
949	ok	1.60						
950	ok	1.60						
951	ok	1.66						
952	ok	1.67						
953	ok	1.68						
954	ok	1.68						
955	ok	1.69						
956	ok	1.69						
957	ok	1.82						
958	ok	1.79						
959	ok	1.71						
960	ok	1.70						
961	ok	1.72						

962	ok	1.72
963	ok	1.73
964	ok	1.73
965	ok	1.73
966	ok	1.73
967	ok	1.72
968	ok	1.81
969	ok	1.84
970	ok	1.80
971	ok	1.73
972	ok	1.74
973	ok	1.74
974	ok	1.74
975	ok	1.74
976	ok	1.73
977	ok	1.73
978	ok	1.72
979	ok	1.72
980	ok	1.81
981	ok	1.84
982	ok	1.71
983	ok	1.71
984	ok	1.70
985	ok	1.70
986	ok	1.69
987	ok	1.68
988	ok	1.62
989	ok	1.62
990	ok	1.86
991	ok	1.88
992	ok	1.19
993	ok	1.21
994	ok	1.12
995	ok	1.16
996	ok	1.18
997	ok	1.22
998	ok	1.19
999	ok	1.23
1000	ok	1.17
1001	ok	1.22
1002	ok	1.10
1003	ok	1.16
1004	ok	1.19
1005	ok	1.24
1006	ok	1.21
1007	ok	1.25
1008	ok	1.22
1009	ok	1.26
1010	ok	1.21
1011	ok	1.25
1012	ok	1.18
1013	ok	1.23
1014	ok	1.10
1015	ok	1.24
1016	ok	1.19
1017	ok	1.26
1018	ok	1.22
1019	ok	1.27
1020	ok	1.23
1021	ok	1.26
1022	ok	1.23
1023	ok	1.25
1024	ok	1.21
1025	ok	1.17
1026	ok	1.12
1027	ok	1.23
1028	ok	1.19
1029	ok	1.24
1030	ok	1.20
1031	ok	1.23
1032	ok	1.19
1033	ok	1.18
1034	ok	1.13
1035	ok	1.22
1036	ok	1.21
1037	ok	1.03
1038	ok	1.02
1039	ok	0.91

1040	ok	0.94
1041	ok	0.94
1042	ok	0.97
1043	ok	0.95
1044	ok	0.98
1045	ok	0.92
1046	ok	0.94
1047	ok	0.95
1048	ok	0.98
1049	ok	0.96
1050	ok	0.99
1051	ok	0.97
1052	ok	1.00
1053	ok	0.97
1054	ok	1.00
1055	ok	0.96
1056	ok	0.99
1057	ok	0.95
1058	ok	0.98
1059	ok	0.95
1060	ok	0.98
1061	ok	0.95
1062	ok	1.00
1063	ok	0.97
1064	ok	1.01
1065	ok	0.98
1066	ok	1.00
1067	ok	0.97
1068	ok	1.00
1069	ok	0.97
1070	ok	0.99
1071	ok	0.96
1072	ok	0.95
1073	ok	0.92
1074	ok	0.98
1075	ok	0.96
1076	ok	0.98
1077	ok	0.95
1078	ok	0.95
1079	ok	0.92
1080	ok	1.03
1081	ok	1.04
1082	ok	0.76
1083	ok	0.75
1084	ok	0.65
1085	ok	0.68
1086	ok	0.67
1087	ok	0.69
1088	ok	0.67
1089	ok	0.70
1090	ok	0.66
1091	ok	0.69
1092	ok	0.66
1093	ok	0.68
1094	ok	0.68
1095	ok	0.70
1096	ok	0.68
1097	ok	0.71
1098	ok	0.68
1099	ok	0.71
1100	ok	0.68
1101	ok	0.70
1102	ok	0.66
1103	ok	0.68
1104	ok	0.65
1105	ok	0.69
1106	ok	0.66
1107	ok	0.71
1108	ok	0.68
1109	ok	0.71
1110	ok	0.68
1111	ok	0.71
1112	ok	0.69
1113	ok	0.71
1114	ok	0.69
1115	ok	0.69
1116	ok	0.67
1117	ok	0.70

1118	ok	0.67
1119	ok	0.70
1120	ok	0.68
1121	ok	0.70
1122	ok	0.67
1123	ok	0.68
1124	ok	0.66
1125	ok	0.75
1126	ok	0.77
1127	ok	0.50
1128	ok	0.58
1129	ok	0.41
1130	ok	0.56
1131	ok	0.43
1132	ok	0.55
1133	ok	0.43
1134	ok	0.55
1135	ok	0.42
1136	ok	0.54
1137	ok	0.43
1138	ok	0.54
1139	ok	0.44
1140	ok	0.55
1141	ok	0.44
1142	ok	0.54
1143	ok	0.44
1144	ok	0.54
1145	ok	0.43
1146	ok	0.54
1147	ok	0.42
1148	ok	0.53
1149	ok	0.42
1150	ok	0.53
1151	ok	0.42
1152	ok	0.54
1153	ok	0.43
1154	ok	0.54
1155	ok	0.44
1156	ok	0.55
1157	ok	0.44
1158	ok	0.55
1159	ok	0.44
1160	ok	0.55
1161	ok	0.43
1162	ok	0.55
1163	ok	0.43
1164	ok	0.55
1165	ok	0.43
1166	ok	0.55
1167	ok	0.43
1168	ok	0.56
1169	ok	0.41
1170	ok	0.59
1171	ok	0.51
1172	ok	0.31
1173	ok	0.34
1174	ok	0.39
1175	ok	0.29
1176	ok	0.40
1177	ok	0.26
1178	ok	0.39
1179	ok	0.26
1180	ok	0.38
1181	ok	0.26
1182	ok	0.37
1183	ok	0.26
1184	ok	0.37
1185	ok	0.25
1186	ok	0.36
1187	ok	0.24
1188	ok	0.35
1189	ok	0.24
1190	ok	0.35
1191	ok	0.24
1192	ok	0.34
1193	ok	0.24
1194	ok	0.34
1195	ok	0.24

1196	ok	0.34
1197	ok	0.25
1198	ok	0.35
1199	ok	0.25
1200	ok	0.36
1201	ok	0.25
1202	ok	0.36
1203	ok	0.25
1204	ok	0.37
1205	ok	0.26
1206	ok	0.37
1207	ok	0.26
1208	ok	0.37
1209	ok	0.26
1210	ok	0.39
1211	ok	0.27
1212	ok	0.40
1213	ok	0.29
1214	ok	0.39
1215	ok	0.34
1216	ok	0.31

Nodo	Max tau	Ver V pr	Ver V sec	Af V pr	Af V sec	V pr	V sec
	1.88						

Macro Guscio	Spessore	Id Materiale	Id Criterio	Progettazione
	cm			
27	15.00	1	1	Singolo elemento

Nodo	Stato	x/d	V N/M	ver. rid	Af pr-	Af pr+	Af sec-	Af sec+	N x	N y	N xy	M x	M y	M xy
									kN/ m	kN/ m	kN/ m	kN	kN	kN
1552	ok	0.23	0.2	1.18e-03	4.7	4.7	4.7	4.7	0.6	3.3	2.7	4.4	0.5	-6.81e-02
1553	ok	0.23	0.2	2.39e-03	4.7	4.7	4.7	4.7	-2.1	-1.0	9.88e-02	3.2	0.8	-0.5
1554	ok	0.23	0.2	1.61e-03	4.7	4.7	4.7	4.7	2.2	2.9	2.9	3.6	0.7	-0.2
1555	ok	0.23	0.2	2.59e-03	4.7	4.7	4.7	4.7	-1.0	-0.8	1.1	-3.2	-0.4	-0.3
1556	ok	0.23	0.2	1.98e-03	4.7	4.7	4.7	4.7	2.5	3.1	3.0	3.6	0.7	-0.2
1557	ok	0.23	0.2	2.69e-03	4.7	4.7	4.7	4.7	-0.3	-1.1	1.3	-3.3	-0.4	-0.3
1558	ok	0.23	0.2	1.88e-03	4.7	4.7	4.7	4.7	3.6	3.0	2.9	3.6	0.7	-0.2
1559	ok	0.23	0.2	2.41e-03	4.7	4.7	4.7	4.7	0.9	-1.1	1.3	-3.3	-0.5	-0.3
1560	ok	0.23	0.2	1.53e-03	4.7	4.7	4.7	4.7	4.2	2.0	3.0	3.7	0.7	-0.2
1561	ok	0.23	0.2	2.08e-03	4.7	4.7	4.7	4.7	-4.4	-1.2	1.3	-3.7	-0.5	-0.3
1562	ok	0.23	0.2	1.23e-03	4.7	4.7	4.7	4.7	-0.4	2.9	2.9	4.0	0.8	-4.62e-02
1563	ok	0.23	0.2	1.78e-03	4.7	4.7	4.7	4.7	-3.9	-1.0	1.3	-3.5	-0.5	-0.3
1564	ok	0.23	0.2	1.17e-03	4.7	4.7	4.7	4.7	-0.2	2.7	3.0	3.7	0.7	-0.2
1565	ok	0.23	0.2	1.81e-03	4.7	4.7	4.7	4.7	-3.9	-1.1	1.3	-3.5	-0.5	-0.3
1566	ok	0.23	0.2	1.28e-03	4.7	4.7	4.7	4.7	-0.8	2.8	2.9	3.7	0.7	-0.2
1567	ok	0.23	0.2	1.89e-03	4.7	4.7	4.7	4.7	-4.0	-1.1	1.3	-3.5	-0.5	-0.3
1568	ok	0.23	0.2	1.24e-03	4.7	4.7	4.7	4.7	-0.7	2.8	2.8	3.7	0.7	-0.2
1569	ok	0.23	0.2	1.58e-03	4.7	4.7	4.7	4.7	-3.3	-1.0	1.2	-3.6	-0.5	-0.3
1570	ok	0.23	0.2	9.61e-04	4.7	4.7	4.7	4.7	0.4	2.8	2.8	3.6	0.7	-0.2
1571	ok	0.23	0.2	1.20e-03	4.7	4.7	4.7	4.7	-1.9	-1.0	1.2	-3.6	-0.5	-0.3
1572	ok	0.23	0.2	6.03e-04	4.7	4.7	4.7	4.7	2.4	2.6	2.8	3.6	0.7	-0.2
1573	ok	0.23	0.2	1.04e-03	4.7	4.7	4.7	4.7	-0.5	-1.1	1.2	-3.9	-0.5	-0.3
1574	ok	0.23	0.2	4.55e-04	4.7	4.7	4.7	4.7	4.4	2.9	-2.9	4.0	0.8	5.70e-02
1575	ok	0.23	0.2	1.04e-03	4.7	4.7	4.7	4.7	0.3	-1.1	1.4	-3.7	-0.6	-0.4
1576	ok	0.23	0.2	5.31e-04	4.7	4.7	4.7	4.7	3.7	2.7	-2.8	3.7	0.7	0.2
1577	ok	0.23	0.2	1.19e-03	4.7	4.7	4.7	4.7	0.5	-1.1	1.3	-3.6	-0.5	-0.3
1578	ok	0.23	0.2	8.78e-04	4.7	4.7	4.7	4.7	1.0	2.9	-2.8	3.7	0.7	0.2
1579	ok	0.23	0.2	1.46e-03	4.7	4.7	4.7	4.7	0.5	-1.1	1.3	-3.6	-0.5	-0.3
1580	ok	0.23	0.2	1.05e-03	4.7	4.7	4.7	4.7	-9.61e-02	2.9	-2.9	3.7	0.7	0.2
1581	ok	0.23	0.2	1.68e-03	4.7	4.7	4.7	4.7	0.8	-1.1	1.3	-3.6	-0.5	-0.3
1582	ok	0.23	0.2	1.08e-03	4.7	4.7	4.7	4.7	-0.1	2.9	-2.9	3.7	0.7	0.2
1583	ok	0.23	0.2	1.61e-03	4.7	4.7	4.7	4.7	1.5	-1.0	1.3	-3.5	-0.5	-0.3
1584	ok	0.23	0.2	1.01e-03	4.7	4.7	4.7	4.7	0.3	2.7	-3.0	3.7	0.7	0.2
1585	ok	0.23	0.2	1.75e-03	4.7	4.7	4.7	4.7	-3.1	-1.2	1.3	-3.8	-0.5	-0.3
1586	ok	0.23	0.2	9.88e-04	4.7	4.7	4.7	4.7	5.6	2.9	-2.9	4.1	0.8	4.27e-02
1587	ok	0.23	0.2	1.95e-03	4.7	4.7	4.7	4.7	-4.0	-1.2	-1.3	-3.7	-0.5	0.3
1588	ok	0.23	0.2	1.44e-03	4.7	4.7	4.7	4.7	5.0	2.7	-2.9	3.7	0.7	0.2
1589	ok	0.23	0.2	2.34e-03	4.7	4.7	4.7	4.7	-4.9	-1.1	1.5	-3.4	-0.5	-0.2
1590	ok	0.23	0.2	1.83e-03	4.7	4.7	4.7	4.7	3.5	3.0	-2.9	3.7	0.7	0.2
1591	ok	0.23	0.2	2.66e-03	4.7	4.7	4.7	4.7	-5.8	-1.1	1.6	-3.3	-0.5	-0.2
1592	ok	0.23	0.2	1.97e-03	4.7	4.7	4.7	4.7	2.4	3.1	-3.0	3.7	0.7	0.2
1593	ok	0.23	0.2	2.58e-03	4.7	4.7	4.7	4.7	-5.7	-1.0	1.5	-3.3	-0.5	-0.2

1594	ok	0.23	0.2	1.61e-03	4.7	4.7	4.7	4.7	2.2	2.9	-2.9	3.7	0.7	0.2
1595	ok	0.23	0.2	2.38e-03	4.7	4.7	4.7	4.7	-4.0	-1.5	1.7	-4.0	-0.5	-0.3
1596	ok	0.23	0.2	1.19e-03	4.7	4.7	4.7	4.7	0.6	3.3	-2.7	4.5	0.5	6.68e-02
1597	ok	0.23	0.2	6.60e-04	4.7	4.7	4.7	4.7	0.9	4.5	2.7	3.4	0.7	1.66e-03
1598	ok	0.23	0.2	6.33e-04	4.7	4.7	4.7	4.7	2.0	0.8	-0.2	-2.4	-0.6	-0.4
1599	ok	0.23	0.2	1.41e-03	4.7	4.7	4.7	4.7	-3.85e-02	3.3	1.1	2.9	0.6	-0.2
1600	ok	0.23	0.2	1.25e-03	4.7	4.7	4.7	4.7	1.9	0.7	-6.15e-02	-2.6	-0.6	-0.4
1601	ok	0.23	0.2	1.73e-03	4.7	4.7	4.7	4.7	0.1	3.6	0.6	3.0	0.6	-0.2
1602	ok	0.23	0.2	1.54e-03	4.7	4.7	4.7	4.7	2.3	0.7	-0.4	-2.7	-0.6	-0.4
1603	ok	0.23	0.2	1.72e-03	4.7	4.7	4.7	4.7	0.5	3.6	0.3	3.0	0.6	-0.2
1604	ok	0.23	0.2	1.50e-03	4.7	4.7	4.7	4.7	2.8	0.9	-0.5	-2.7	-0.6	-0.4
1605	ok	0.23	0.2	1.61e-03	4.7	4.7	4.7	4.7	0.5	2.8	0.7	2.9	0.6	-0.2
1606	ok	0.23	0.2	1.26e-03	4.7	4.7	4.7	4.7	-1.6	1.0	-1.8	-2.8	-0.6	0.4
1607	ok	0.23	0.2	1.45e-03	4.7	4.7	4.7	4.7	2.3	2.1	1.8	3.0	0.6	-0.1
1608	ok	0.23	0.2	9.73e-04	4.7	4.7	4.7	4.7	-0.4	0.9	5.25e-02	-2.8	-0.6	-0.4
1609	ok	0.23	0.2	1.28e-03	4.7	4.7	4.7	4.7	0.8	3.3	1.1	3.0	0.7	-0.2
1610	ok	0.23	0.2	1.07e-03	4.7	4.7	4.7	4.7	-0.3	0.9	0.3	-2.9	-0.6	-0.4
1611	ok	0.23	0.2	1.30e-03	4.7	4.7	4.7	4.7	-2.6	3.4	0.7	3.0	0.6	-0.2
1612	ok	0.23	0.2	9.97e-04	4.7	4.7	4.7	4.7	1.9	1.0	-1.3	-2.9	-0.6	0.4
1613	ok	0.23	0.2	1.19e-03	4.7	4.7	4.7	4.7	-2.4	3.5	0.2	3.0	0.6	-0.2
1614	ok	0.23	0.2	7.29e-04	4.7	4.7	4.7	4.7	-0.8	1.0	1.1	-2.9	-0.6	-0.4
1615	ok	0.23	0.2	9.30e-04	4.7	4.7	4.7	4.7	-1.7	3.3	4.07e-02	3.0	0.6	-0.2
1616	ok	0.23	0.2	4.42e-04	4.7	4.7	4.7	4.7	-8.14e-02	1.1	0.9	-3.0	-0.6	-0.4
1617	ok	0.23	0.2	7.13e-04	4.7	4.7	4.7	4.7	0.3	3.1	-1.2	2.9	0.6	0.2
1618	ok	0.23	0.2	3.36e-04	4.7	4.7	4.7	4.7	2.8	0.6	-0.3	-2.9	-0.6	0.5
1619	ok	0.23	0.2	5.54e-04	4.7	4.7	4.7	4.7	1.0	2.0	1.7	2.9	0.6	-0.1
1620	ok	0.23	0.2	4.06e-04	4.7	4.7	4.7	4.7	0.9	1.1	1.5	-2.9	-0.6	-0.4
1621	ok	0.23	0.2	6.31e-04	4.7	4.7	4.7	4.7	-0.1	3.2	-0.5	2.9	0.6	0.2
1622	ok	0.23	0.2	6.97e-04	4.7	4.7	4.7	4.7	0.3	1.1	-0.9	-3.0	-0.6	0.4
1623	ok	0.23	0.2	8.22e-04	4.7	4.7	4.7	4.7	-0.2	3.4	-7.89e-02	3.0	0.6	0.2
1624	ok	0.23	0.2	8.12e-04	4.7	4.7	4.7	4.7	0.7	0.8	0.4	-2.9	-0.6	0.4
1625	ok	0.23	0.2	1.04e-03	4.7	4.7	4.7	4.7	-0.1	3.5	-0.3	3.0	0.7	0.2
1626	ok	0.23	0.2	8.16e-04	4.7	4.7	4.7	4.7	0.3	0.8	1.53e-02	-2.9	-0.6	0.4
1627	ok	0.23	0.2	1.15e-03	4.7	4.7	4.7	4.7	0.3	3.5	-0.7	3.1	0.7	0.2
1628	ok	0.23	0.2	9.36e-04	4.7	4.7	4.7	4.7	0.1	0.9	-0.2	-2.9	-0.6	0.4
1629	ok	0.23	0.2	1.20e-03	4.7	4.7	4.7	4.7	0.8	3.3	-1.1	3.1	0.7	0.2
1630	ok	0.23	0.2	9.12e-04	4.7	4.7	4.7	4.7	3.5	0.7	-0.2	-2.8	-0.6	0.4
1631	ok	0.23	0.2	1.35e-03	4.7	4.7	4.7	4.7	2.2	2.1	-1.8	3.0	0.6	0.1
1632	ok	0.23	0.2	1.20e-03	4.7	4.7	4.7	4.7	-1.4	1.0	1.9	-2.8	-0.6	-0.4
1633	ok	0.23	0.2	1.55e-03	4.7	4.7	4.7	4.7	1.0	3.4	-0.5	3.0	0.6	0.2
1634	ok	0.23	0.2	1.46e-03	4.7	4.7	4.7	4.7	2.8	0.9	0.6	-2.7	-0.6	0.4
1635	ok	0.23	0.2	1.67e-03	4.7	4.7	4.7	4.7	0.5	3.6	-0.2	3.0	0.7	0.2
1636	ok	0.23	0.2	1.51e-03	4.7	4.7	4.7	4.7	2.3	0.7	0.4	-2.7	-0.6	0.4
1637	ok	0.23	0.2	1.71e-03	4.7	4.7	4.7	4.7	0.1	3.6	-0.6	3.0	0.6	0.2
1638	ok	0.23	0.2	1.24e-03	4.7	4.7	4.7	4.7	1.9	0.7	7.28e-02	-2.6	-0.6	0.4
1639	ok	0.23	0.2	1.40e-03	4.7	4.7	4.7	4.7	-2.92e-02	3.3	-1.1	3.0	0.6	0.2
1640	ok	0.23	0.2	6.28e-04	4.7	4.7	4.7	4.7	-0.5	-3.67e-02	0.8	-3.0	-0.5	-0.2
1641	ok	0.23	0.2	6.63e-04	4.7	4.7	4.7	4.7	0.9	4.4	-2.7	3.5	0.7	-1.81e-03
1642	ok	0.23	0.1	7.03e-04	4.7	4.7	4.7	4.7	0.8	3.8	2.2	2.6	0.6	-5.65e-02
1643	ok	0.23	0.1	6.23e-04	4.7	4.7	4.7	4.7	0.9	2.4	1.5	-1.9	-0.4	-0.4
1644	ok	0.23	0.1	1.31e-03	4.7	4.7	4.7	4.7	1.0	2.0	2.7	2.3	0.5	-0.1
1645	ok	0.23	0.1	1.20e-03	4.7	4.7	4.7	4.7	0.8	1.6	1.5	-2.0	-0.4	-0.4
1646	ok	0.23	0.1	1.85e-03	4.7	4.7	4.7	4.7	1.0	1.7	2.2	2.3	0.5	-0.1
1647	ok	0.23	0.1	1.63e-03	4.7	4.7	4.7	4.7	0.8	1.5	1.1	-2.1	-0.4	-0.4
1648	ok	0.23	0.1	1.97e-03	4.7	4.7	4.7	4.7	1.0	1.7	1.9	2.3	0.5	-0.2
1649	ok	0.23	0.1	1.72e-03	4.7	4.7	4.7	4.7	0.8	1.6	0.9	-2.1	-0.4	-0.4
1650	ok	0.23	0.1	1.72e-03	4.7	4.7	4.7	4.7	1.0	1.7	2.1	2.3	0.5	-0.1
1651	ok	0.23	0.1	1.51e-03	4.7	4.7	4.7	4.7	-1.3	1.2	-1.9	-2.2	-0.5	0.4
1652	ok	0.23	0.1	1.42e-03	4.7	4.7	4.7	4.7	1.0	1.4	1.3	2.3	0.5	-0.2
1653	ok	0.23	0.1	1.24e-03	4.7	4.7	4.7	4.7	0.7	1.6	1.5	-2.2	-0.5	-0.4
1654	ok	0.23	0.1	1.28e-03	4.7	4.7	4.7	4.7	0.8	1.7	2.7	2.3	0.5	-0.2
1655	ok	0.23	0.1	1.10e-03	4.7	4.7	4.7	4.7	-1.0	1.1	-1.0	-2.2	-0.5	0.4
1656	ok	0.23	0.1	1.43e-03	4.7	4.7	4.7	4.7	0.6	1.6	2.3	2.3	0.5	-0.2
1657	ok	0.23	0.1	1.19e-03	4.7	4.7	4.7	4.7	-0.9	1.1	-1.2	-2.3	-0.5	0.4
1658	ok	0.23	0.1	1.65e-03	4.7	4.7	4.7	4.7	0.3	1.5	1.8	2.3	0.5	-0.2
1659	ok	0.23	0.1	1.37e-03	4.7	4.7	4.7	4.7	-0.7	1.4	0.9	-2.3	-0.5	-0.4
1660	ok	0.23	0.1	1.67e-03	4.7	4.7	4.7	4.7	0.3	1.6	1.5	2.3	0.5	-0.2
1661	ok	0.23	0.1	1.38e-03	4.7	4.7	4.7	4.7	-0.4	1.4	0.7	-2.3	-0.5	-0.4
1662	ok	0.23	0.1	1.36e-03	4.7	4.7	4.7	4.7	0.2	1.7	1.9	2.2	0.4	-0.2
1663	ok	0.23	0.1	1.12e-03	4.7	4.7	4.7	4.7	-0.2	1.4	-1.6	-2.3	-0.5	0.4
1664	ok	0.23	0.1	1.02e-03	4.7	4.7	4.7	4.7	4.82e-02	0.7	2.2	2.2	0.4	-0.2
1665	ok	0.23	0.1	1.08e-03	4.7	4.7	4.7	4.7	-0.1	1.4	1.5	-2.3	-0.5	-0.4
1666	ok	0.23	0.1	1.32e-03	4.7	4.7	4.7	4.7	-0.1	1.7	2.7	2.2	0.4	-0.2
1667	ok	0.23	0.1	1.33e-03	4.7	4.7	4.7	4.7	0.1	1.4	-0.8	-2.3	-0.5	0.4
1668	ok	0.23	0.1	1.62e-03	4.7	4.7	4.7	4.7	-0.4	1.5	2.4	2.2	0.4	-0.2
1669	ok	0.23	0.1	1.31e-03	4.7	4.7	4.7	4.7	0.2	1.4	-1.0	-2.3	-0.5	0.4
1670	ok	0.23	0.1	1.60e-03	4.7	4.7	4.7	4.7	-0.7	1.4	2.0	2.1	0.4	-0.2
1671	ok	0.23	0.1	1.14e-03	4.7	4.7	4.7	4.7	-0.8	1.1	1.2	-2.3	-0.5	-0.4

1672	ok	0.23	0.1	1.38e-03	4.7	4.7	4.7	4.7	-0.8	1.4	1.9	2.1	0.4	-0.2
1673	ok	0.23	0.1	1.05e-03	4.7	4.7	4.7	4.7	-0.9	1.1	1.0	-2.2	-0.5	-0.4
1674	ok	0.23	0.1	1.24e-03	4.7	4.7	4.7	4.7	-0.9	1.5	2.3	2.0	0.4	-0.1
1675	ok	0.23	0.1	1.22e-03	4.7	4.7	4.7	4.7	0.8	1.6	-1.5	-2.2	-0.5	0.4
1676	ok	0.23	0.1	1.40e-03	4.7	4.7	4.7	4.7	1.0	1.4	-1.2	2.4	0.5	0.2
1677	ok	0.23	0.1	1.50e-03	4.7	4.7	4.7	4.7	0.9	1.6	-1.0	-2.2	-0.4	0.4
1678	ok	0.23	0.1	1.72e-03	4.7	4.7	4.7	4.7	1.0	1.5	-0.7	2.3	0.5	0.1
1679	ok	0.23	0.1	1.72e-03	4.7	4.7	4.7	4.7	0.8	1.6	-0.8	-2.1	-0.4	0.4
1680	ok	0.23	0.1	1.97e-03	4.7	4.7	4.7	4.7	1.0	1.7	-1.8	2.3	0.5	0.2
1681	ok	0.23	0.1	1.63e-03	4.7	4.7	4.7	4.7	0.8	1.5	-1.1	-2.1	-0.4	0.4
1682	ok	0.23	0.1	1.84e-03	4.7	4.7	4.7	4.7	1.0	1.7	-2.1	2.3	0.5	0.1
1683	ok	0.23	0.1	1.20e-03	4.7	4.7	4.7	4.7	0.8	1.6	-1.5	-2.0	-0.4	0.4
1684	ok	0.23	0.1	1.31e-03	4.7	4.7	4.7	4.7	1.0	2.0	-2.6	2.3	0.5	0.1
1685	ok	0.23	0.1	6.16e-04	4.7	4.7	4.7	4.7	-0.6	0.4	0.9	-2.3	-0.5	-0.3
1686	ok	0.23	0.1	6.96e-04	4.7	4.7	4.7	4.7	0.8	3.8	-2.2	2.7	0.6	5.64e-02
1687	ok	0.23	0.1	8.17e-04	4.7	4.7	4.7	4.7	0.9	4.1	3.0	1.9	0.3	-2.51e-02
1688	ok	0.23	9.02e-02	8.55e-04	4.7	4.7	4.7	4.7	0.8	2.6	3.0	-1.4	-0.3	-0.3
1689	ok	0.23	9.44e-02	1.51e-03	4.7	4.7	4.7	4.7	1.4	1.6	2.9	1.6	0.3	-0.1
1690	ok	0.23	9.34e-02	1.42e-03	4.7	4.7	4.7	4.7	0.8	1.5	3.6	-1.4	-0.3	-0.4
1691	ok	0.23	9.42e-02	2.05e-03	4.7	4.7	4.7	4.7	1.3	1.4	3.3	1.7	0.3	-0.1
1692	ok	0.23	9.42e-02	1.95e-03	4.7	4.7	4.7	4.7	0.6	1.4	3.2	-1.5	-0.3	-0.4
1693	ok	0.23	9.37e-02	2.28e-03	4.7	4.7	4.7	4.7	1.1	1.4	3.0	1.7	0.3	-0.1
1694	ok	0.23	9.48e-02	2.15e-03	4.7	4.7	4.7	4.7	0.4	1.4	2.9	-1.5	-0.3	-0.4
1695	ok	0.23	9.29e-02	2.13e-03	4.7	4.7	4.7	4.7	0.8	1.5	3.2	1.7	0.3	-0.1
1696	ok	0.23	9.66e-02	2.00e-03	4.7	4.7	4.7	4.7	0.2	1.4	3.2	-1.5	-0.3	-0.4
1697	ok	0.23	9.31e-02	1.85e-03	4.7	4.7	4.7	4.7	0.4	0.4	3.6	1.7	0.3	-0.1
1698	ok	0.23	9.78e-02	1.74e-03	4.7	4.7	4.7	4.7	-4.71e-02	1.3	3.7	-1.6	-0.3	-0.4
1699	ok	0.23	9.23e-02	1.75e-03	4.7	4.7	4.7	4.7	0.2	0.3	3.9	1.7	0.3	-0.2
1700	ok	0.23	9.83e-02	1.77e-03	4.7	4.7	4.7	4.7	-0.2	1.3	3.9	-1.6	-0.3	-0.4
1701	ok	0.23	9.15e-02	1.96e-03	4.7	4.7	4.7	4.7	5.48e-03	3.53e-03	3.5	1.7	0.3	-0.2
1702	ok	0.23	9.87e-02	1.73e-03	4.7	4.7	4.7	4.7	-0.4	1.1	3.6	-1.6	-0.3	-0.4
1703	ok	0.23	9.06e-02	2.10e-03	4.7	4.7	4.7	4.7	0.2	1.0	3.0	1.6	0.3	-0.2
1704	ok	0.23	9.83e-02	1.95e-03	4.7	4.7	4.7	4.7	-0.6	1.1	3.0	-1.6	-0.3	-0.4
1705	ok	0.23	8.90e-02	2.20e-03	4.7	4.7	4.7	4.7	-1.10e-02	1.1	2.7	1.6	0.3	-0.2
1706	ok	0.23	9.84e-02	2.04e-03	4.7	4.7	4.7	4.7	-0.8	1.2	2.7	-1.6	-0.3	-0.4
1707	ok	0.23	8.75e-02	1.98e-03	4.7	4.7	4.7	4.7	-0.2	1.3	3.0	1.6	0.3	-0.2
1708	ok	0.23	9.87e-02	1.82e-03	4.7	4.7	4.7	4.7	-0.9	1.2	3.0	-1.6	-0.4	-0.4
1709	ok	0.23	8.77e-02	1.66e-03	4.7	4.7	4.7	4.7	-0.7	0.2	3.4	1.6	0.3	-0.2
1710	ok	0.23	9.88e-02	1.81e-03	4.7	4.7	4.7	4.7	-0.8	1.2	-3.1	-1.6	-0.4	0.4
1711	ok	0.23	8.86e-02	1.97e-03	4.7	4.7	4.7	4.7	-0.8	0.1	3.8	1.6	0.3	-0.2
1712	ok	0.23	9.81e-02	2.02e-03	4.7	4.7	4.7	4.7	-0.7	1.1	-2.8	-1.6	-0.3	0.4
1713	ok	0.23	9.03e-02	2.19e-03	4.7	4.7	4.7	4.7	-0.9	-0.1	3.6	1.5	0.3	-0.2
1714	ok	0.23	9.87e-02	1.94e-03	4.7	4.7	4.7	4.7	-0.5	1.1	-3.1	-1.6	-0.3	0.4
1715	ok	0.23	9.20e-02	2.09e-03	4.7	4.7	4.7	4.7	-1.0	-0.3	3.0	1.5	0.3	-0.2
1716	ok	0.23	9.91e-02	1.73e-03	4.7	4.7	4.7	4.7	-0.4	1.1	-3.6	-1.6	-0.3	0.4
1717	ok	0.23	9.30e-02	1.95e-03	4.7	4.7	4.7	4.7	-1.1	-0.2	2.7	1.5	0.3	-0.2
1718	ok	0.23	9.88e-02	1.76e-03	4.7	4.7	4.7	4.7	-0.2	1.2	-3.9	-1.6	-0.3	0.4
1719	ok	0.23	9.39e-02	1.72e-03	4.7	4.7	4.7	4.7	-0.9	1.1	3.4	1.4	0.3	-0.1
1720	ok	0.23	9.82e-02	1.76e-03	4.7	4.7	4.7	4.7	-0.2	0.6	-3.9	-1.6	-0.3	0.4
1721	ok	0.23	9.47e-02	1.88e-03	4.7	4.7	4.7	4.7	-1.1	7.47e-02	3.8	1.4	0.3	-0.1
1722	ok	0.23	9.70e-02	2.03e-03	4.7	4.7	4.7	4.7	0.2	1.4	-3.1	-1.6	-0.3	0.4
1723	ok	0.23	9.45e-02	2.16e-03	4.7	4.7	4.7	4.7	-1.1	5.66e-02	4.2	1.3	0.3	-0.1
1724	ok	0.23	9.52e-02	2.17e-03	4.7	4.7	4.7	4.7	0.4	1.4	-2.8	-1.5	-0.3	0.4
1725	ok	0.23	9.53e-02	2.30e-03	4.7	4.7	4.7	4.7	1.1	1.3	-2.0	1.7	0.3	0.1
1726	ok	0.23	9.46e-02	1.95e-03	4.7	4.7	4.7	4.7	0.6	1.4	-3.2	-1.5	-0.3	0.4
1727	ok	0.23	9.57e-02	2.06e-03	4.7	4.7	4.7	4.7	1.3	1.3	-2.4	1.7	0.3	0.1
1728	ok	0.23	9.37e-02	1.42e-03	4.7	4.7	4.7	4.7	0.8	1.5	-3.6	-1.5	-0.3	0.4
1729	ok	0.23	9.59e-02	1.51e-03	4.7	4.7	4.7	4.7	1.4	1.6	-2.9	1.7	0.3	0.1
1730	ok	0.23	9.02e-02	8.42e-04	4.7	4.7	4.7	4.7	-0.5	0.5	1.3	-1.6	-0.3	-0.2
1731	ok	0.23	0.1	8.08e-04	4.7	4.7	4.7	4.7	0.9	4.1	-3.0	1.9	0.3	2.48e-02
1732	ok	0.23	5.79e-02	8.92e-04	4.7	4.7	4.7	4.7	0.1	3.4	2.4	1.1	0.4	-7.21e-02
1733	ok	0.23	6.26e-02	7.34e-04	4.7	4.7	4.7	4.7	1.6	2.4	2.8	-0.7	-0.2	-0.3
1734	ok	0.23	5.41e-02	1.31e-03	4.7	4.7	4.7	4.7	1.3	1.9	4.0	0.9	0.2	-0.2
1735	ok	0.23	6.67e-02	1.27e-03	4.7	4.7	4.7	4.7	1.6	0.6	4.1	-0.8	-0.3	-0.3
1736	ok	0.23	5.39e-02	1.86e-03	4.7	4.7	4.7	4.7	1.2	1.5	3.7	0.9	0.2	-0.2
1737	ok	0.23	6.71e-02	1.87e-03	4.7	4.7	4.7	4.7	1.4	0.5	3.8	-0.8	-0.3	-0.3
1738	ok	0.23	5.34e-02	2.24e-03	4.7	4.7	4.7	4.7	1.0	1.4	3.4	0.9	0.2	-0.2
1739	ok	0.23	6.66e-02	2.21e-03	4.7	4.7	4.7	4.7	1.1	0.5	3.4	-0.8	-0.3	-0.3
1740	ok	0.23	5.27e-02	2.31e-03	4.7	4.7	4.7	4.7	0.8	1.5	3.5	0.9	0.2	-0.2
1741	ok	0.23	6.79e-02	2.20e-03	4.7	4.7	4.7	4.7	0.7	0.5	3.8	-0.9	-0.4	-0.3
1742	ok	0.23	5.22e-02	2.28e-03	4.7	4.7	4.7	4.7	0.5	1.5	4.0	0.9	0.2	-0.2
1743	ok	0.23	6.93e-02	2.00e-03	4.7	4.7	4.7	4.7	0.4	0.4	4.4	-0.9	-0.4	-0.3
1744	ok	0.23	5.11e-02	2.07e-03	4.7	4.7	4.7	4.7	0.3	1.4	4.3	0.9	0.2	-0.2
1745	ok	0.23	6.96e-02	1.88e-03	4.7	4.7	4.7	4.7	0.2	0.4	4.6	-0.9	-0.4	-0.3
1746	ok	0.23	5.04e-02	2.05e-03	4.7	4.7	4.7	4.7	8.57e-02	1.2	4.0	0.9	0.2	-0.2
1747	ok	0.23	6.89e-02	1.96e-03	4.7	4.7	4.7	4.7	-4.47e-03	0.3	4.2	-0.9	-0.4	-0.3
1748	ok	0.23	4.92e-02	2.25e-03	4.7	4.7	4.7	4.7	-0.2	1.1	3.5	0.9	0.2	-0.2
1749	ok	0.23	6.72e-02	2.17e-03	4.7	4.7	4.7	4.7	-0.4	0.3	3.6	-0.9	-0.4	-0.3

1750	ok	0.23	4.72e-02	2.37e-03	4.7	4.7	4.7	4.7	-0.5	1.1	3.2	0.9	0.2	-0.2
1751	ok	0.23	6.60e-02	2.28e-03	4.7	4.7	4.7	4.7	-1.9	0.3	-4.6	-0.9	-0.4	0.3
1752	ok	0.23	4.54e-02	2.34e-03	4.7	4.7	4.7	4.7	-0.9	1.1	3.4	0.9	0.1	-0.2
1753	ok	0.23	6.61e-02	2.12e-03	4.7	4.7	4.7	4.7	-1.8	0.3	-4.3	-0.9	-0.4	0.3
1754	ok	0.23	4.36e-02	2.11e-03	4.7	4.7	4.7	4.7	-1.6	1.1	3.9	0.9	0.1	-0.2
1755	ok	0.23	6.61e-02	2.08e-03	4.7	4.7	4.7	4.7	-1.7	0.3	4.2	-0.9	-0.4	-0.3
1756	ok	0.23	4.54e-02	2.33e-03	4.7	4.7	4.7	4.7	-1.8	1.0	4.2	0.8	0.1	-0.2
1757	ok	0.23	6.57e-02	2.26e-03	4.7	4.7	4.7	4.7	-0.9	0.3	-3.2	-0.9	-0.4	0.3
1758	ok	0.23	4.73e-02	2.33e-03	4.7	4.7	4.7	4.7	-2.0	0.9	4.2	0.8	0.1	-0.2
1759	ok	0.23	6.74e-02	2.15e-03	4.7	4.7	4.7	4.7	-0.5	0.3	-3.6	-0.9	-0.4	0.3
1760	ok	0.23	4.93e-02	2.23e-03	4.7	4.7	4.7	4.7	-2.1	0.8	3.7	0.8	0.1	-0.2
1761	ok	0.23	6.90e-02	1.97e-03	4.7	4.7	4.7	4.7	-0.1	0.3	-4.2	-0.9	-0.4	0.3
1762	ok	0.23	5.06e-02	2.04e-03	4.7	4.7	4.7	4.7	-2.3	0.8	3.4	0.8	0.1	-0.2
1763	ok	0.23	6.96e-02	1.89e-03	4.7	4.7	4.7	4.7	0.1	0.4	-4.6	-0.9	-0.4	0.3
1764	ok	0.23	5.15e-02	2.10e-03	4.7	4.7	4.7	4.7	-2.3	0.9	3.6	0.7	0.1	-0.2
1765	ok	0.23	6.93e-02	2.03e-03	4.7	4.7	4.7	4.7	0.3	0.4	-4.3	-0.9	-0.4	0.3
1766	ok	0.23	5.27e-02	2.31e-03	4.7	4.7	4.7	4.7	-2.3	1.0	4.2	0.7	0.1	-0.2
1767	ok	0.23	6.79e-02	2.22e-03	4.7	4.7	4.7	4.7	0.7	0.5	-3.7	-0.9	-0.4	0.3
1768	ok	0.23	5.32e-02	2.33e-03	4.7	4.7	4.7	4.7	-2.0	1.0	4.4	0.7	0.1	-0.2
1769	ok	0.23	6.67e-02	2.22e-03	4.7	4.7	4.7	4.7	1.0	0.5	-3.4	-0.8	-0.3	0.3
1770	ok	0.23	5.40e-02	2.25e-03	4.7	4.7	4.7	4.7	-1.4	0.9	4.0	0.6	8.89e-02	-0.2
1771	ok	0.23	6.72e-02	1.87e-03	4.7	4.7	4.7	4.7	1.4	0.5	-3.7	-0.8	-0.3	0.3
1772	ok	0.23	5.45e-02	1.86e-03	4.7	4.7	4.7	4.7	-0.7	0.8	3.0	0.6	6.98e-02	-0.2
1773	ok	0.23	6.70e-02	1.26e-03	4.7	4.7	4.7	4.7	1.6	0.6	-4.1	-0.8	-0.3	0.3
1774	ok	0.23	5.47e-02	1.30e-03	4.7	4.7	4.7	4.7	1.6	2.0	-3.8	0.9	0.1	0.1
1775	ok	0.23	6.28e-02	7.24e-04	4.7	4.7	4.7	4.7	0.6	0.9	1.7	-0.9	-0.4	-0.2
1776	ok	0.23	5.85e-02	8.83e-04	4.7	4.7	4.7	4.7	9.79e-02	3.4	-2.4	1.1	0.4	7.17e-02
1777	ok	0.23	2.78e-02	1.06e-03	4.7	4.7	4.7	4.7	1.4	1.7	0.9	5.37e-02	0.1	-0.1
1778	ok	0.23	2.95e-02	1.18e-03	4.7	4.7	4.7	4.7	2.1	-0.6	3.0	0.2	0.3	-0.3
1779	ok	0.23	2.42e-02	1.28e-03	4.7	4.7	4.7	4.7	0.3	0.3	-3.4	0.2	7.57e-02	0.1
1780	ok	0.23	3.63e-02	1.53e-03	4.7	4.7	4.7	4.7	1.9	5.36e-02	4.4	0.2	0.2	-0.4
1781	ok	0.23	2.26e-02	1.91e-03	4.7	4.7	4.7	4.7	-1.2	0.2	-4.1	9.69e-04	8.59e-02	0.1
1782	ok	0.23	3.25e-02	2.08e-03	4.7	4.7	4.7	4.7	-1.6	-0.5	-3.8	-0.1	0.2	0.3
1783	ok	0.23	2.97e-02	2.42e-03	4.7	4.7	4.7	4.7	1.7	1.1	4.4	-0.2	1.70e-02	-0.1
1784	ok	0.23	3.19e-02	2.53e-03	4.7	4.7	4.7	4.7	-3.0	-0.5	-4.3	-0.1	0.1	0.3
1785	ok	0.23	2.82e-02	2.70e-03	4.7	4.7	4.7	4.7	1.2	0.9	4.2	-0.2	1.38e-02	-0.1
1786	ok	0.23	3.21e-02	2.70e-03	4.7	4.7	4.7	4.7	-3.8	-0.6	-4.1	-0.1	0.2	0.3
1787	ok	0.23	2.78e-02	2.73e-03	4.7	4.7	4.7	4.7	0.8	0.9	4.5	-0.2	9.04e-03	-0.1
1788	ok	0.23	3.29e-02	2.60e-03	4.7	4.7	4.7	4.7	-4.1	-0.6	-3.6	-0.1	0.2	0.3
1789	ok	0.23	2.82e-02	2.62e-03	4.7	4.7	4.7	4.7	0.7	0.9	4.8	-0.2	1.04e-02	-0.1
1790	ok	0.23	3.38e-02	2.47e-03	4.7	4.7	4.7	4.7	-4.0	-0.6	-3.4	-0.2	0.1	0.3
1791	ok	0.23	2.85e-02	2.52e-03	4.7	4.7	4.7	4.7	0.6	0.8	4.8	-0.2	8.85e-03	-0.1
1792	ok	0.23	3.30e-02	2.46e-03	4.7	4.7	4.7	4.7	-3.6	-0.5	-3.7	-0.2	0.1	0.3
1793	ok	0.23	2.70e-02	2.52e-03	4.7	4.7	4.7	4.7	0.2	0.7	4.4	-0.2	7.78e-03	-0.1
1794	ok	0.23	3.11e-02	2.58e-03	4.7	4.7	4.7	4.7	-3.4	-0.4	-4.2	-0.2	0.1	0.4
1795	ok	0.23	2.47e-02	2.58e-03	4.7	4.7	4.7	4.7	-0.6	0.6	4.0	-0.2	7.33e-03	-0.1
1796	ok	0.23	2.88e-02	2.67e-03	4.7	4.7	4.7	4.7	-3.3	-0.4	-4.4	-0.2	0.1	0.4
1797	ok	0.23	2.25e-02	2.52e-03	4.7	4.7	4.7	4.7	-1.6	0.4	3.8	-0.2	7.38e-03	-0.1
1798	ok	0.23	2.77e-02	2.53e-03	4.7	4.7	4.7	4.7	-3.1	-0.4	-4.2	-0.2	0.1	0.4
1799	ok	0.23	2.15e-02	2.28e-03	4.7	4.7	4.7	4.7	-2.6	0.3	-4.1	-0.2	5.78e-03	0.1
1800	ok	0.23	2.76e-02	2.47e-03	4.7	4.7	4.7	4.7	-3.0	-0.4	4.2	-0.2	0.1	-0.4
1801	ok	0.23	2.21e-02	2.47e-03	4.7	4.7	4.7	4.7	-1.9	0.4	-3.8	-0.2	8.28e-03	0.1
1802	ok	0.23	2.84e-02	2.63e-03	4.7	4.7	4.7	4.7	-3.2	-0.4	4.4	-0.2	0.1	-0.4
1803	ok	0.23	2.42e-02	2.54e-03	4.7	4.7	4.7	4.7	-0.9	0.5	-4.0	-0.2	7.96e-03	0.1
1804	ok	0.23	3.06e-02	2.56e-03	4.7	4.7	4.7	4.7	-3.3	-0.4	4.1	-0.2	0.1	-0.3
1805	ok	0.23	2.65e-02	2.51e-03	4.7	4.7	4.7	4.7	-0.1	0.7	-4.4	-0.2	7.89e-03	0.1
1806	ok	0.23	3.25e-02	2.45e-03	4.7	4.7	4.7	4.7	-3.6	-0.5	3.6	-0.2	0.1	-0.3
1807	ok	0.23	2.78e-02	2.51e-03	4.7	4.7	4.7	4.7	0.2	0.8	-4.8	-0.2	8.61e-03	0.1
1808	ok	0.23	3.32e-02	2.47e-03	4.7	4.7	4.7	4.7	-4.0	-0.6	3.3	-0.2	0.1	-0.3
1809	ok	0.23	2.76e-02	2.62e-03	4.7	4.7	4.7	4.7	0.3	0.8	-4.7	-0.2	1.01e-02	0.1
1810	ok	0.23	3.24e-02	2.61e-03	4.7	4.7	4.7	4.7	-4.2	-0.6	3.6	-0.1	0.1	-0.3
1811	ok	0.23	2.71e-02	2.73e-03	4.7	4.7	4.7	4.7	0.5	0.8	-4.4	-0.2	8.83e-03	0.1
1812	ok	0.23	3.18e-02	2.71e-03	4.7	4.7	4.7	4.7	-3.8	-0.6	4.1	-0.1	0.2	-0.3
1813	ok	0.23	2.77e-02	2.70e-03	4.7	4.7	4.7	4.7	1.1	0.9	-4.2	-0.2	1.39e-02	0.1
1814	ok	0.23	3.17e-02	2.53e-03	4.7	4.7	4.7	4.7	-2.9	-0.5	4.3	-0.1	0.1	-0.3
1815	ok	0.23	2.92e-02	2.41e-03	4.7	4.7	4.7	4.7	1.6	1.1	-4.3	-0.2	1.76e-02	0.1
1816	ok	0.23	3.24e-02	2.06e-03	4.7	4.7	4.7	4.7	-1.6	-0.5	3.8	-0.1	0.2	-0.3
1817	ok	0.23	2.25e-02	1.89e-03	4.7	4.7	4.7	4.7	-1.2	0.2	4.1	-7.46e-04	8.52e-02	-0.1
1818	ok	0.23	3.64e-02	1.53e-03	4.7	4.7	4.7	4.7	1.9	5.40e-02	-4.4	0.2	0.2	0.4
1819	ok	0.23	2.40e-02	1.27e-03	4.7	4.7	4.7	4.7	0.3	0.3	3.4	0.2	7.54e-02	-0.1
1820	ok	0.23	2.99e-02	1.17e-03	4.7	4.7	4.7	4.7	2.1	-0.6	-3.0	0.2	0.3	0.3
1821	ok	0.23	2.78e-02	1.05e-03	4.7	4.7	4.7	4.7	1.4	1.7	-0.8	4.97e-02	0.1	0.1

Nodo	**x/d**	**V N/M**	**ver. rid**	**Af pr-**	**Af pr+**	**Af sec-**	**Af sec+**	**N x**	**N y**	**N xy**	**M x**	**M y**	**M xy**
								-5.82	-1.47	-4.76	-3.97	-0.64	-0.53
	0.23	0.25	2.73e-03	4.67	4.67	4.67	4.67	5.58	4.45	4.78	4.51	0.79	0.45

Nodo	Stato	Max tau	Ver V pr	Ver V sec	Af V pr	Af V sec	V pr	V sec
		kN/ m2					kN/ m	kN/ m
1552	ok	1.77						
1553	ok	1.74						
1554	ok	1.61						
1555	ok	1.59						
1556	ok	1.63						
1557	ok	1.61						
1558	ok	1.65						
1559	ok	1.62						
1560	ok	1.64						
1561	ok	1.62						
1562	ok	1.76						
1563	ok	1.73						
1564	ok	1.68						
1565	ok	1.65						
1566	ok	1.69						
1567	ok	1.66						
1568	ok	1.70						
1569	ok	1.67						
1570	ok	1.70						
1571	ok	1.66						
1572	ok	1.68						
1573	ok	1.75						
1574	ok	1.78						
1575	ok	1.74						
1576	ok	1.69						
1577	ok	1.68						
1578	ok	1.71						
1579	ok	1.68						
1580	ok	1.71						
1581	ok	1.68						
1582	ok	1.71						
1583	ok	1.67						
1584	ok	1.70						
1585	ok	1.75						
1586	ok	1.78						
1587	ok	1.65						
1588	ok	1.66						
1589	ok	1.64						
1590	ok	1.66						
1591	ok	1.63						
1592	ok	1.65						
1593	ok	1.61						
1594	ok	1.63						
1595	ok	1.76						
1596	ok	1.79						
1597	ok	1.13						
1598	ok	1.15						
1599	ok	1.10						
1600	ok	1.15						
1601	ok	1.12						
1602	ok	1.17						
1603	ok	1.13						
1604	ok	1.18						
1605	ok	1.12						
1606	ok	1.17						
1607	ok	1.07						
1608	ok	1.11						
1609	ok	1.15						
1610	ok	1.20						
1611	ok	1.16						
1612	ok	1.21						
1613	ok	1.16						
1614	ok	1.21						
1615	ok	1.15						
1616	ok	1.20						
1617	ok	1.14						
1618	ok	1.17						
1619	ok	1.07						
1620	ok	1.18						
1621	ok	1.14						
1622	ok	1.21						
1623	ok	1.16						
1624	ok	1.22						
1625	ok	1.17						
1626	ok	1.22						
1627	ok	1.17						

1628	ok	1.21
1629	ok	1.17
1630	ok	1.13
1631	ok	1.08
1632	ok	1.18
1633	ok	1.13
1634	ok	1.19
1635	ok	1.14
1636	ok	1.18
1637	ok	1.13
1638	ok	1.17
1639	ok	1.11
1640	ok	1.16
1641	ok	1.15
1642	ok	0.97
1643	ok	0.96
1644	ok	0.91
1645	ok	0.93
1646	ok	0.92
1647	ok	0.94
1648	ok	0.92
1649	ok	0.95
1650	ok	0.89
1651	ok	0.91
1652	ok	0.93
1653	ok	0.95
1654	ok	0.94
1655	ok	0.96
1656	ok	0.94
1657	ok	0.97
1658	ok	0.94
1659	ok	0.97
1660	ok	0.94
1661	ok	0.96
1662	ok	0.93
1663	ok	0.95
1664	ok	0.93
1665	ok	0.95
1666	ok	0.92
1667	ok	0.97
1668	ok	0.95
1669	ok	0.97
1670	ok	0.95
1671	ok	0.97
1672	ok	0.95
1673	ok	0.97
1674	ok	0.95
1675	ok	0.96
1676	ok	0.94
1677	ok	0.92
1678	ok	0.90
1679	ok	0.96
1680	ok	0.93
1681	ok	0.95
1682	ok	0.93
1683	ok	0.94
1684	ok	0.92
1685	ok	0.97
1686	ok	0.98
1687	ok	0.73
1688	ok	0.70
1689	ok	0.65
1690	ok	0.68
1691	ok	0.65
1692	ok	0.68
1693	ok	0.66
1694	ok	0.68
1695	ok	0.65
1696	ok	0.67
1697	ok	0.64
1698	ok	0.67
1699	ok	0.66
1700	ok	0.69
1701	ok	0.66
1702	ok	0.69
1703	ok	0.66
1704	ok	0.69
1705	ok	0.66

1706	ok	0.69
1707	ok	0.64
1708	ok	0.67
1709	ok	0.63
1710	ok	0.67
1711	ok	0.65
1712	ok	0.69
1713	ok	0.66
1714	ok	0.70
1715	ok	0.67
1716	ok	0.70
1717	ok	0.67
1718	ok	0.69
1719	ok	0.67
1720	ok	0.68
1721	ok	0.65
1722	ok	0.68
1723	ok	0.65
1724	ok	0.69
1725	ok	0.66
1726	ok	0.69
1727	ok	0.66
1728	ok	0.68
1729	ok	0.66
1730	ok	0.71
1731	ok	0.73
1732	ok	0.48
1733	ok	0.56
1734	ok	0.42
1735	ok	0.54
1736	ok	0.42
1737	ok	0.55
1738	ok	0.43
1739	ok	0.55
1740	ok	0.42
1741	ok	0.54
1742	ok	0.42
1743	ok	0.54
1744	ok	0.43
1745	ok	0.54
1746	ok	0.43
1747	ok	0.54
1748	ok	0.43
1749	ok	0.53
1750	ok	0.42
1751	ok	0.53
1752	ok	0.41
1753	ok	0.52
1754	ok	0.41
1755	ok	0.52
1756	ok	0.41
1757	ok	0.53
1758	ok	0.42
1759	ok	0.54
1760	ok	0.43
1761	ok	0.54
1762	ok	0.43
1763	ok	0.55
1764	ok	0.43
1765	ok	0.55
1766	ok	0.42
1767	ok	0.55
1768	ok	0.42
1769	ok	0.55
1770	ok	0.43
1771	ok	0.55
1772	ok	0.43
1773	ok	0.54
1774	ok	0.42
1775	ok	0.56
1776	ok	0.48
1777	ok	0.36
1778	ok	0.36
1779	ok	0.31
1780	ok	0.31
1781	ok	0.36
1782	ok	0.29
1783	ok	0.35

1784	ok	0.28
1785	ok	0.33
1786	ok	0.28
1787	ok	0.32
1788	ok	0.28
1789	ok	0.32
1790	ok	0.27
1791	ok	0.30
1792	ok	0.27
1793	ok	0.30
1794	ok	0.27
1795	ok	0.29
1796	ok	0.26
1797	ok	0.28
1798	ok	0.26
1799	ok	0.28
1800	ok	0.26
1801	ok	0.28
1802	ok	0.27
1803	ok	0.29
1804	ok	0.27
1805	ok	0.30
1806	ok	0.27
1807	ok	0.30
1808	ok	0.28
1809	ok	0.31
1810	ok	0.28
1811	ok	0.32
1812	ok	0.28
1813	ok	0.33
1814	ok	0.28
1815	ok	0.35
1816	ok	0.29
1817	ok	0.36
1818	ok	0.31
1819	ok	0.31
1820	ok	0.36
1821	ok	0.36

Nodo	Max tau	Ver V pr	Ver V sec	Af V pr	Af V sec	V pr	V sec
	1.79						

Macro Guscio	Spessore	Id Materiale	Id Criterio	Progettazione
	cm			
28	15.00	1	1	Singolo elemento

Nodo	Stato	x/d	V N/M	ver. rid	Af pr-	Af pr+	Af sec-	Af sec+	N x	N y	N xy	M x	M y	M xy
									kN/ m	kN/ m	kN/ m	kN	kN	kN
2157	ok	0.23	0.3	1.46e-03	4.7	4.7	4.7	4.7	6.6	3.1	3.7	5.1	0.6	7.58e-03
2158	ok	0.23	0.2	2.92e-03	4.7	4.7	4.7	4.7	3.8	-0.5	1.8	3.7	0.9	-0.6
2159	ok	0.23	0.2	1.60e-03	4.7	4.7	4.7	4.7	2.4	2.6	3.3	3.8	0.7	-0.2
2160	ok	0.23	0.2	2.30e-03	4.7	4.7	4.7	4.7	1.7	-1.4	2.2	-3.5	-0.5	-0.3
2161	ok	0.23	0.2	2.29e-03	4.7	4.7	4.7	4.7	2.0	2.1	2.9	3.9	0.7	-0.1
2162	ok	0.23	0.2	3.08e-03	4.7	4.7	4.7	4.7	-6.8	-1.5	2.1	-3.5	-0.5	-0.3
2163	ok	0.23	0.2	2.38e-03	4.7	4.7	4.7	4.7	3.3	1.9	2.7	3.8	0.7	-0.2
2164	ok	0.23	0.2	3.15e-03	4.7	4.7	4.7	4.7	-7.1	-1.4	1.9	-3.6	-0.5	-0.3
2165	ok	0.23	0.2	2.18e-03	4.7	4.7	4.7	4.7	5.0	1.6	2.6	3.9	0.7	-0.2
2166	ok	0.23	0.2	3.16e-03	4.7	4.7	4.7	4.7	-7.2	-1.5	1.9	-4.0	-0.5	-0.3
2167	ok	0.23	0.3	2.33e-03	4.7	4.7	4.7	4.7	5.8	2.3	2.8	4.3	0.8	-2.99e-03
2168	ok	0.23	0.2	2.47e-03	4.7	4.7	4.7	4.7	-4.8	-0.9	1.6	-3.7	-0.6	-0.4
2169	ok	0.23	0.2	2.03e-03	4.7	4.7	4.7	4.7	4.9	2.2	2.6	3.9	0.8	-0.2
2170	ok	0.23	0.2	2.51e-03	4.7	4.7	4.7	4.7	-5.6	-1.2	1.6	-3.7	-0.5	-0.3
2171	ok	0.23	0.2	2.42e-03	4.7	4.7	4.7	4.7	2.8	2.4	2.3	3.9	0.8	-0.2
2172	ok	0.23	0.2	2.49e-03	4.7	4.7	4.7	4.7	-5.5	-1.3	1.6	-3.7	-0.5	-0.3
2173	ok	0.23	0.2	2.29e-03	4.7	4.7	4.7	4.7	1.4	2.4	2.0	3.8	0.7	-0.2
2174	ok	0.23	0.2	2.22e-03	4.7	4.7	4.7	4.7	-4.8	-1.2	1.6	-3.8	-0.6	-0.3
2175	ok	0.23	0.2	1.61e-03	4.7	4.7	4.7	4.7	1.0	1.8	2.0	3.8	0.7	-0.2
2176	ok	0.23	0.2	1.72e-03	4.7	4.7	4.7	4.7	-3.4	-1.1	1.6	-3.8	-0.6	-0.3
2177	ok	0.23	0.2	6.30e-04	4.7	4.7	4.7	4.7	1.7	1.5	2.2	3.8	0.7	-0.2
2178	ok	0.23	0.2	1.42e-03	4.7	4.7	4.7	4.7	-2.2	-1.2	1.6	-4.2	-0.6	-0.3
2179	ok	0.23	0.2	3.73e-04	4.7	4.7	4.7	4.7	5.0	2.5	-2.5	4.2	0.8	1.44e-02
2180	ok	0.23	0.2	1.24e-03	4.7	4.7	4.7	4.7	-1.6	-1.2	-1.6	-4.2	-0.6	0.3
2181	ok	0.23	0.2	4.58e-04	4.7	4.7	4.7	4.7	4.5	2.3	2.4	3.8	0.7	-0.2

2182	ok	0.23	0.2	1.44e-03	4.7	4.7	4.7	4.7	-0.7	-0.9	1.6	-3.8	-0.5	-0.3
2183	ok	0.23	0.2	1.23e-03	4.7	4.7	4.7	4.7	1.4	2.4	-2.0	3.8	0.7	0.2
2184	ok	0.23	0.2	1.87e-03	4.7	4.7	4.7	4.7	-3.8	-1.2	-1.6	-3.8	-0.6	0.3
2185	ok	0.23	0.2	1.87e-03	4.7	4.7	4.7	4.7	1.6	2.5	-2.1	3.9	0.7	0.2
2186	ok	0.23	0.2	2.12e-03	4.7	4.7	4.7	4.7	-2.9	-1.1	1.7	-3.8	-0.6	-0.3
2187	ok	0.23	0.2	2.00e-03	4.7	4.7	4.7	4.7	3.0	2.4	-2.4	4.0	0.8	0.2
2188	ok	0.23	0.2	2.17e-03	4.7	4.7	4.7	4.7	-2.9	-1.0	1.8	-3.7	-0.6	-0.3
2189	ok	0.23	0.2	1.67e-03	4.7	4.7	4.7	4.7	5.1	2.2	-2.7	4.0	0.8	0.2
2190	ok	0.23	0.2	2.19e-03	4.7	4.7	4.7	4.7	-2.8	-1.1	1.9	-4.1	-0.6	-0.3
2191	ok	0.23	0.3	2.07e-03	4.7	4.7	4.7	4.7	5.9	2.3	-2.8	4.4	0.8	-1.43e-03
2192	ok	0.23	0.2	2.96e-03	4.7	4.7	4.7	4.7	-6.6	-1.5	-1.8	-4.0	-0.5	0.3
2193	ok	0.23	0.2	2.02e-03	4.7	4.7	4.7	4.7	5.0	1.6	-2.6	4.0	0.7	0.2
2194	ok	0.23	0.2	3.02e-03	4.7	4.7	4.7	4.7	-3.7	-0.9	2.2	-3.6	-0.5	-0.3
2195	ok	0.23	0.2	2.31e-03	4.7	4.7	4.7	4.7	3.3	1.9	-2.6	3.9	0.7	0.1
2196	ok	0.23	0.2	3.01e-03	4.7	4.7	4.7	4.7	-3.8	-0.9	2.5	-3.6	-0.5	-0.2
2197	ok	0.23	0.2	2.27e-03	4.7	4.7	4.7	4.7	2.1	2.6	-2.9	3.9	0.7	0.1
2198	ok	0.23	0.2	2.30e-03	4.7	4.7	4.7	4.7	1.7	-1.4	-2.2	-3.5	-0.5	0.3
2199	ok	0.23	0.2	1.61e-03	4.7	4.7	4.7	4.7	2.5	2.6	-3.3	3.9	0.7	0.2
2200	ok	0.23	0.2	2.91e-03	4.7	4.7	4.7	4.7	-5.8	-1.3	2.8	-4.5	-0.6	-0.3
2201	ok	0.23	0.3	1.43e-03	4.7	4.7	4.7	4.7	6.7	3.1	-3.7	5.2	0.6	-9.97e-03
2202	ok	0.23	0.2	1.63e-03	4.7	4.7	4.7	4.7	1.8	1.1	4.6	3.8	0.8	6.29e-02
2203	ok	0.23	0.2	1.48e-03	4.7	4.7	4.7	4.7	1.9	-0.3	2.0	-2.5	-0.6	-0.5
2204	ok	0.23	0.2	2.36e-03	4.7	4.7	4.7	4.7	1.3	1.2	3.7	3.0	0.6	-0.1
2205	ok	0.23	0.2	2.12e-03	4.7	4.7	4.7	4.7	1.6	-0.2	1.5	-2.7	-0.6	-0.4
2206	ok	0.23	0.2	2.69e-03	4.7	4.7	4.7	4.7	1.6	0.8	2.5	3.1	0.6	-0.1
2207	ok	0.23	0.2	2.36e-03	4.7	4.7	4.7	4.7	2.2	-0.2	0.9	-2.8	-0.6	-0.4
2208	ok	0.23	0.2	2.62e-03	4.7	4.7	4.7	4.7	1.6	2.00e-02	2.3	3.1	0.6	-0.1
2209	ok	0.23	0.2	2.41e-03	4.7	4.7	4.7	4.7	2.8	5.52e-02	0.5	-2.8	-0.6	-0.4
2210	ok	0.23	0.2	2.33e-03	4.7	4.7	4.7	4.7	2.0	0.3	2.5	3.0	0.6	-0.1
2211	ok	0.23	0.2	2.15e-03	4.7	4.7	4.7	4.7	-2.6	0.4	-3.1	-2.9	-0.6	0.4
2212	ok	0.23	0.2	2.14e-03	4.7	4.7	4.7	4.7	2.5	1.6	2.7	3.1	0.6	-0.1
2213	ok	0.23	0.2	1.91e-03	4.7	4.7	4.7	4.7	2.9	0.5	1.0	-2.9	-0.6	-0.5
2214	ok	0.23	0.2	1.98e-03	4.7	4.7	4.7	4.7	1.1	1.5	1.3	3.1	0.7	-0.1
2215	ok	0.23	0.2	1.86e-03	4.7	4.7	4.7	4.7	1.8	4.55e-02	1.2	-2.9	-0.6	-0.4
2216	ok	0.23	0.2	2.20e-03	4.7	4.7	4.7	4.7	1.1	0.7	1.8	3.1	0.6	-0.1
2217	ok	0.23	0.2	1.96e-03	4.7	4.7	4.7	4.7	1.1	-0.2	0.8	-3.0	-0.6	-0.4
2218	ok	0.23	0.2	2.41e-03	4.7	4.7	4.7	4.7	0.5	0.5	1.0	3.1	0.6	-0.1
2219	ok	0.23	0.2	1.82e-03	4.7	4.7	4.7	4.7	-2.9	-0.4	-2.3	-3.0	-0.6	0.4
2220	ok	0.23	0.2	2.05e-03	4.7	4.7	4.7	4.7	0.3	0.3	0.8	3.0	0.6	-0.1
2221	ok	0.23	0.2	1.60e-03	4.7	4.7	4.7	4.7	-1.6	0.6	-2.9	-3.0	-0.6	0.4
2222	ok	0.23	0.2	1.51e-03	4.7	4.7	4.7	4.7	0.3	1.4	-1.2	3.0	0.6	0.1
2223	ok	0.23	0.2	1.25e-03	4.7	4.7	4.7	4.7	-0.2	0.3	-0.9	-3.0	-0.7	0.5
2224	ok	0.23	0.2	1.17e-03	4.7	4.7	4.7	4.7	5.15e-02	1.5	2.2	3.0	0.6	-0.1
2225	ok	0.23	0.2	1.12e-03	4.7	4.7	4.7	4.7	0.1	0.3	0.8	-3.0	-0.7	-0.5
2226	ok	0.23	0.2	1.41e-03	4.7	4.7	4.7	4.7	-1.69e-02	1.4	1.0	3.0	0.6	-0.1
2227	ok	0.23	0.2	1.47e-03	4.7	4.7	4.7	4.7	-1.7	-0.2	2.5	-3.0	-0.6	-0.4
2228	ok	0.23	0.2	1.87e-03	4.7	4.7	4.7	4.7	-0.2	1.2	0.5	3.0	0.6	0.1
2229	ok	0.23	0.2	1.70e-03	4.7	4.7	4.7	4.7	0.7	-0.3	-0.4	-3.0	-0.6	0.4
2230	ok	0.23	0.2	2.11e-03	4.7	4.7	4.7	4.7	0.2	1.2	0.3	3.1	0.6	0.1
2231	ok	0.23	0.2	1.73e-03	4.7	4.7	4.7	4.7	1.2	-0.2	-0.8	-3.0	-0.6	0.4
2232	ok	0.23	0.2	2.01e-03	4.7	4.7	4.7	4.7	0.6	1.3	-0.5	3.1	0.6	0.1
2233	ok	0.23	0.2	1.66e-03	4.7	4.7	4.7	4.7	1.9	4.86e-02	-1.2	-2.9	-0.6	0.4
2234	ok	0.23	0.2	1.80e-03	4.7	4.7	4.7	4.7	1.2	1.6	-1.3	3.2	0.7	0.1
2235	ok	0.23	0.2	1.75e-03	4.7	4.7	4.7	4.7	3.0	0.5	-1.0	-2.9	-0.6	0.5
2236	ok	0.23	0.2	2.04e-03	4.7	4.7	4.7	4.7	2.5	1.6	-2.6	3.2	0.7	0.1
2237	ok	0.23	0.2	2.05e-03	4.7	4.7	4.7	4.7	-2.3	0.5	3.1	-2.9	-0.6	-0.4
2238	ok	0.23	0.2	2.24e-03	4.7	4.7	4.7	4.7	1.4	1.2	-0.7	3.1	0.6	0.1
2239	ok	0.23	0.2	2.34e-03	4.7	4.7	4.7	4.7	2.8	5.89e-02	-0.4	-2.8	-0.6	0.4
2240	ok	0.23	0.2	2.57e-03	4.7	4.7	4.7	4.7	2.0	1.0	-1.8	3.1	0.6	0.1
2241	ok	0.23	0.2	2.32e-03	4.7	4.7	4.7	4.7	2.2	-0.2	-0.9	-2.8	-0.6	0.4
2242	ok	0.23	0.2	2.66e-03	4.7	4.7	4.7	4.7	1.6	0.8	-2.5	3.1	0.6	0.1
2243	ok	0.23	0.2	2.10e-03	4.7	4.7	4.7	4.7	1.6	-0.2	-1.5	-2.7	-0.6	0.4
2244	ok	0.23	0.2	2.34e-03	4.7	4.7	4.7	4.7	0.9	1.6	-1.8	3.1	0.6	0.1
2245	ok	0.23	0.2	1.47e-03	4.7	4.7	4.7	4.7	-1.6	0.1	2.7	-3.2	-0.6	-0.2
2246	ok	0.23	0.2	1.64e-03	4.7	4.7	4.7	4.7	1.8	1.0	-4.6	3.8	0.8	-6.39e-02
2247	ok	0.23	0.2	1.87e-03	4.7	4.7	4.7	4.7	0.5	0.8	4.6	2.7	0.6	-1.35e-02
2248	ok	0.23	0.1	1.80e-03	4.7	4.7	4.7	4.7	0.8	0.9	4.3	-1.9	-0.4	-0.4
2249	ok	0.23	0.1	2.22e-03	4.7	4.7	4.7	4.7	1.0	-0.6	5.1	2.3	0.5	-0.1
2250	ok	0.23	0.1	2.28e-03	4.7	4.7	4.7	4.7	0.7	1.06e-02	4.0	-2.0	-0.4	-0.4
2251	ok	0.23	0.1	2.65e-03	4.7	4.7	4.7	4.7	0.9	-1.0	4.1	2.3	0.5	-0.1
2252	ok	0.23	0.1	2.58e-03	4.7	4.7	4.7	4.7	0.4	-0.1	3.1	-2.1	-0.4	-0.4
2253	ok	0.23	0.1	2.65e-03	4.7	4.7	4.7	4.7	0.8	-0.9	3.4	2.3	0.5	-0.1
2254	ok	0.23	0.1	2.55e-03	4.7	4.7	4.7	4.7	0.3	7.18e-02	2.4	-2.1	-0.4	-0.4
2255	ok	0.23	0.1	2.35e-03	4.7	4.7	4.7	4.7	0.5	-0.3	3.3	2.3	0.5	-0.1
2256	ok	0.23	0.1	2.25e-03	4.7	4.7	4.7	4.7	-2.9	0.4	-3.1	-2.2	-0.5	0.4
2257	ok	0.23	0.1	2.17e-03	4.7	4.7	4.7	4.7	0.5	1.0	2.8	2.3	0.5	-0.1
2258	ok	0.23	0.1	2.02e-03	4.7	4.7	4.7	4.7	-0.4	0.5	2.8	-2.2	-0.5	-0.4
2259	ok	0.23	0.1	2.05e-03	4.7	4.7	4.7	4.7	-0.3	-0.4	3.8	2.3	0.5	-0.1

2260	ok	0.23	0.1	1.99e-03	4.7	4.7	4.7	4.7	-3.4	-0.7	-1.8	-2.2	-0.4	0.4
2261	ok	0.23	0.1	2.22e-03	4.7	4.7	4.7	4.7	-0.6	-1.1	3.3	2.3	0.5	-0.2
2262	ok	0.23	0.1	2.18e-03	4.7	4.7	4.7	4.7	-3.4	-0.8	-2.1	-2.2	-0.4	0.4
2263	ok	0.23	0.1	2.43e-03	4.7	4.7	4.7	4.7	-1.0	-1.5	2.7	2.3	0.5	-0.2
2264	ok	0.23	0.1	2.33e-03	4.7	4.7	4.7	4.7	-3.4	-0.7	-2.5	-2.3	-0.4	0.4
2265	ok	0.23	0.1	2.39e-03	4.7	4.7	4.7	4.7	-1.3	-1.5	2.3	2.3	0.5	-0.2
2266	ok	0.23	0.1	2.27e-03	4.7	4.7	4.7	4.7	-1.9	-0.2	1.5	-2.3	-0.5	-0.4
2267	ok	0.23	0.1	2.10e-03	4.7	4.7	4.7	4.7	-1.6	-0.9	2.5	2.2	0.5	-0.1
2268	ok	0.23	0.1	1.94e-03	4.7	4.7	4.7	4.7	-2.3	0.8	-2.6	-2.3	-0.5	0.4
2269	ok	0.23	0.1	1.91e-03	4.7	4.7	4.7	4.7	-2.0	0.6	2.8	2.2	0.4	-0.2
2270	ok	0.23	0.1	1.94e-03	4.7	4.7	4.7	4.7	-2.2	0.8	2.5	-2.3	-0.5	-0.4
2271	ok	0.23	0.1	2.05e-03	4.7	4.7	4.7	4.7	-2.5	-0.4	3.3	2.2	0.5	-0.2
2272	ok	0.23	0.1	2.18e-03	4.7	4.7	4.7	4.7	-1.8	-0.3	-1.7	-2.3	-0.5	0.4
2273	ok	0.23	0.1	2.30e-03	4.7	4.7	4.7	4.7	-2.6	-1.5	3.1	2.2	0.4	-0.2
2274	ok	0.23	0.1	2.24e-03	4.7	4.7	4.7	4.7	-3.3	-0.7	2.4	-2.3	-0.4	-0.4
2275	ok	0.23	0.1	2.35e-03	4.7	4.7	4.7	4.7	-2.8	-1.7	2.6	2.1	0.4	-0.2
2276	ok	0.23	0.1	2.10e-03	4.7	4.7	4.7	4.7	-3.2	-0.8	2.0	-2.3	-0.4	-0.4
2277	ok	0.23	0.1	2.16e-03	4.7	4.7	4.7	4.7	-2.9	-1.6	2.3	2.1	0.4	-0.1
2278	ok	0.23	0.1	1.94e-03	4.7	4.7	4.7	4.7	-3.2	-0.6	1.8	-2.2	-0.5	-0.4
2279	ok	0.23	0.1	2.00e-03	4.7	4.7	4.7	4.7	-3.0	-1.0	2.6	2.0	0.4	-0.1
2280	ok	0.23	0.1	1.99e-03	4.7	4.7	4.7	4.7	0.1	1.1	-2.9	-2.2	-0.4	0.4
2281	ok	0.23	0.1	2.16e-03	4.7	4.7	4.7	4.7	0.6	1.1	-2.7	2.4	0.5	0.1
2282	ok	0.23	0.1	2.23e-03	4.7	4.7	4.7	4.7	-2.8	0.4	3.2	-2.2	-0.5	-0.4
2283	ok	0.23	0.1	2.34e-03	4.7	4.7	4.7	4.7	-2.4	0.1	3.7	1.9	0.4	-0.1
2284	ok	0.23	0.1	2.53e-03	4.7	4.7	4.7	4.7	0.4	9.32e-02	-2.3	-2.1	-0.4	0.4
2285	ok	0.23	0.1	2.64e-03	4.7	4.7	4.7	4.7	0.8	-0.8	-3.3	2.3	0.5	0.1
2286	ok	0.23	0.1	2.55e-03	4.7	4.7	4.7	4.7	0.5	-0.1	-3.1	-2.1	-0.4	0.4
2287	ok	0.23	0.1	2.63e-03	4.7	4.7	4.7	4.7	1.0	-1.0	-4.1	2.3	0.5	0.1
2288	ok	0.23	0.1	2.25e-03	4.7	4.7	4.7	4.7	0.7	1.61e-02	-4.0	-2.0	-0.4	0.4
2289	ok	0.23	0.1	2.20e-03	4.7	4.7	4.7	4.7	1.0	-0.6	-5.0	2.3	0.5	0.1
2290	ok	0.23	0.1	1.80e-03	4.7	4.7	4.7	4.7	-0.9	0.7	3.1	-2.4	-0.5	-0.2
2291	ok	0.23	0.2	1.88e-03	4.7	4.7	4.7	4.7	0.5	0.8	-4.6	2.8	0.6	1.26e-02
2292	ok	0.23	0.1	1.82e-03	4.7	4.7	4.7	4.7	0.5	1.9	4.9	1.8	0.3	-7.78e-03
2293	ok	0.23	9.26e-02	1.75e-03	4.7	4.7	4.7	4.7	0.8	0.6	4.1	-1.3	-0.3	-0.4
2294	ok	0.23	9.06e-02	2.13e-03	4.7	4.7	4.7	4.7	1.2	0.2	5.5	1.6	0.3	-0.1
2295	ok	0.23	9.41e-02	2.25e-03	4.7	4.7	4.7	4.7	1.1	2.78e-02	4.6	-1.4	-0.3	-0.4
2296	ok	0.23	9.18e-02	2.61e-03	4.7	4.7	4.7	4.7	1.3	-0.1	4.4	1.6	0.3	-0.1
2297	ok	0.23	9.45e-02	2.74e-03	4.7	4.7	4.7	4.7	1.0	-0.2	3.9	-1.5	-0.3	-0.4
2298	ok	0.23	9.09e-02	2.88e-03	4.7	4.7	4.7	4.7	1.0	-0.2	4.3	1.6	0.3	-0.1
2299	ok	0.23	9.42e-02	2.95e-03	4.7	4.7	4.7	4.7	0.6	-4.54e-02	3.5	-1.5	-0.3	-0.4
2300	ok	0.23	8.97e-02	2.86e-03	4.7	4.7	4.7	4.7	0.6	0.2	4.2	1.6	0.3	-0.1
2301	ok	0.23	9.51e-02	2.87e-03	4.7	4.7	4.7	4.7	0.2	0.2	3.6	-1.5	-0.3	-0.4
2302	ok	0.23	8.89e-02	2.81e-03	4.7	4.7	4.7	4.7	-0.2	0.5	4.2	1.6	0.3	-0.1
2303	ok	0.23	9.68e-02	2.70e-03	4.7	4.7	4.7	4.7	-0.3	0.2	4.1	-1.5	-0.3	-0.4
2304	ok	0.23	8.71e-02	2.72e-03	4.7	4.7	4.7	4.7	-0.7	0.2	4.6	1.6	0.3	-0.2
2305	ok	0.23	9.66e-02	2.66e-03	4.7	4.7	4.7	4.7	-0.8	-0.1	4.4	-1.5	-0.3	-0.4
2306	ok	0.23	8.53e-02	2.75e-03	4.7	4.7	4.7	4.7	-1.1	-0.4	4.4	1.6	0.3	-0.2
2307	ok	0.23	9.49e-02	2.81e-03	4.7	4.7	4.7	4.7	-1.3	-0.5	4.1	-1.6	-0.3	-0.4
2308	ok	0.23	8.33e-02	2.94e-03	4.7	4.7	4.7	4.7	-1.6	-0.9	3.7	1.6	0.3	-0.2
2309	ok	0.23	9.27e-02	3.04e-03	4.7	4.7	4.7	4.7	-1.8	-0.6	3.5	-1.6	-0.3	-0.4
2310	ok	0.23	8.06e-02	3.03e-03	4.7	4.7	4.7	4.7	-2.2	-0.7	3.1	1.6	0.3	-0.2
2311	ok	0.23	9.05e-02	3.07e-03	4.7	4.7	4.7	4.7	-2.4	-0.5	3.1	-1.6	-0.3	-0.4
2312	ok	0.23	7.79e-02	2.84e-03	4.7	4.7	4.7	4.7	-2.8	-1.93e-02	3.2	1.6	0.3	-0.2
2313	ok	0.23	9.13e-02	2.79e-03	4.7	4.7	4.7	4.7	-2.8	-0.2	3.3	-1.6	-0.3	-0.4
2314	ok	0.23	7.63e-02	2.61e-03	4.7	4.7	4.7	4.7	-3.6	7.05e-02	3.8	1.6	0.3	-0.2
2315	ok	0.23	9.10e-02	2.74e-03	4.7	4.7	4.7	4.7	-2.7	-0.2	-3.4	-1.6	-0.3	0.4
2316	ok	0.23	7.93e-02	2.78e-03	4.7	4.7	4.7	4.7	-3.9	-0.2	4.3	1.5	0.3	-0.2
2317	ok	0.23	9.13e-02	3.03e-03	4.7	4.7	4.7	4.7	-2.3	-0.5	-3.2	-1.6	-0.3	0.4
2318	ok	0.23	8.21e-02	2.98e-03	4.7	4.7	4.7	4.7	-4.2	-0.7	4.1	1.5	0.3	-0.2
2319	ok	0.23	9.34e-02	3.01e-03	4.7	4.7	4.7	4.7	-1.7	-0.7	-3.6	-1.6	-0.3	0.4
2320	ok	0.23	8.50e-02	2.90e-03	4.7	4.7	4.7	4.7	-4.4	-1.2	3.5	1.5	0.3	-0.2
2321	ok	0.23	9.56e-02	2.81e-03	4.7	4.7	4.7	4.7	-1.1	-0.5	-4.1	-1.6	-0.3	0.4
2322	ok	0.23	8.71e-02	2.75e-03	4.7	4.7	4.7	4.7	-4.6	-1.1	3.0	1.4	0.3	-0.2
2323	ok	0.23	9.71e-02	2.68e-03	4.7	4.7	4.7	4.7	-0.7	-0.1	-4.3	-1.5	-0.3	0.4
2324	ok	0.23	8.89e-02	2.73e-03	4.7	4.7	4.7	4.7	-4.6	-0.6	3.1	1.4	0.3	-0.1
2325	ok	0.23	9.72e-02	2.73e-03	4.7	4.7	4.7	4.7	-0.2	0.2	-4.0	-1.5	-0.3	0.4
2326	ok	0.23	9.07e-02	2.82e-03	4.7	4.7	4.7	4.7	-4.5	-0.2	3.7	1.4	0.3	-0.1
2327	ok	0.23	9.56e-02	2.90e-03	4.7	4.7	4.7	4.7	0.3	0.2	-3.5	-1.5	-0.3	0.4
2328	ok	0.23	9.15e-02	2.89e-03	4.7	4.7	4.7	4.7	-4.0	-0.3	4.2	1.3	0.3	-0.1
2329	ok	0.23	9.47e-02	2.96e-03	4.7	4.7	4.7	4.7	0.7	-1.84e-02	-3.3	-1.5	-0.3	0.4
2330	ok	0.23	9.27e-02	2.89e-03	4.7	4.7	4.7	4.7	1.0	-0.5	-3.8	1.6	0.3	0.1
2331	ok	0.23	9.51e-02	2.73e-03	4.7	4.7	4.7	4.7	1.0	-0.1	-3.9	-1.5	-0.3	0.4
2332	ok	0.23	9.34e-02	2.60e-03	4.7	4.7	4.7	4.7	1.2	-0.5	-4.7	1.6	0.3	0.1
2333	ok	0.23	9.46e-02	2.23e-03	4.7	4.7	4.7	4.7	1.1	3.95e-02	-4.6	-1.4	-0.3	0.4
2334	ok	0.23	9.21e-02	2.11e-03	4.7	4.7	4.7	4.7	1.2	0.2	-5.5	1.6	0.3	0.1
2335	ok	0.23	9.25e-02	1.75e-03	4.7	4.7	4.7	4.7	-0.9	0.8	3.1	-1.6	-0.3	-0.2
2336	ok	0.23	0.1	1.84e-03	4.7	4.7	4.7	4.7	0.5	1.9	-4.9	1.8	0.3	7.15e-03
2337	ok	0.23	5.56e-02	1.43e-03	4.7	4.7	4.7	4.7	-2.24e-02	1.2	3.5	1.0	0.4	-3.92e-02

2338	ok	0.23	6.31e-02	1.75e-03	4.7	4.7	4.7	4.7	-0.2	1.0	-2.2	-0.9	-0.4	0.2
2339	ok	0.23	5.30e-02	2.00e-03	4.7	4.7	4.7	4.7	1.5	0.9	4.9	0.8	0.2	-0.2
2340	ok	0.23	6.93e-02	2.34e-03	4.7	4.7	4.7	4.7	2.4	0.3	4.5	-0.8	-0.3	-0.3
2341	ok	0.23	5.39e-02	2.73e-03	4.7	4.7	4.7	4.7	1.8	0.6	4.7	0.9	0.2	-0.2
2342	ok	0.23	6.95e-02	3.04e-03	4.7	4.7	4.7	4.7	2.5	0.2	4.2	-0.8	-0.3	-0.3
2343	ok	0.23	5.28e-02	3.25e-03	4.7	4.7	4.7	4.7	1.7	0.6	4.3	0.9	0.1	-0.2
2344	ok	0.23	6.83e-02	3.47e-03	4.7	4.7	4.7	4.7	2.1	0.2	3.9	-0.8	-0.3	-0.3
2345	ok	0.23	5.16e-02	3.62e-03	4.7	4.7	4.7	4.7	1.3	0.7	4.3	0.9	0.1	-0.2
2346	ok	0.23	6.89e-02	3.63e-03	4.7	4.7	4.7	4.7	1.5	0.3	4.2	-0.8	-0.3	-0.3
2347	ok	0.23	5.01e-02	3.73e-03	4.7	4.7	4.7	4.7	0.7	0.7	4.8	0.9	0.2	-0.2
2348	ok	0.23	7.02e-02	3.64e-03	4.7	4.7	4.7	4.7	0.9	0.2	4.9	-0.8	-0.3	-0.3
2349	ok	0.23	4.79e-02	3.72e-03	4.7	4.7	4.7	4.7	2.54e-02	0.5	5.1	0.9	0.2	-0.2
2350	ok	0.23	6.93e-02	3.57e-03	4.7	4.7	4.7	4.7	0.3	4.09e-02	5.1	-0.8	-0.3	-0.3
2351	ok	0.23	4.54e-02	3.68e-03	4.7	4.7	4.7	4.7	-0.7	0.2	5.0	0.9	0.2	-0.2
2352	ok	0.23	6.72e-02	3.57e-03	4.7	4.7	4.7	4.7	-0.4	-0.2	4.8	-0.9	-0.3	-0.3
2353	ok	0.23	4.26e-02	3.67e-03	4.7	4.7	4.7	4.7	-1.5	1.83e-02	4.5	0.8	0.2	-0.2
2354	ok	0.23	6.26e-02	3.57e-03	4.7	4.7	4.7	4.7	-1.9	-0.2	4.1	-0.9	-0.3	-0.3
2355	ok	0.23	3.88e-02	3.76e-03	4.7	4.7	4.7	4.7	-2.4	-2.04e-03	4.1	0.8	0.2	-0.2
2356	ok	0.23	5.95e-02	3.51e-03	4.7	4.7	4.7	4.7	-5.6	-6.05e-02	-4.9	-0.9	-0.3	0.3
2357	ok	0.23	3.53e-02	3.62e-03	4.7	4.7	4.7	4.7	-3.5	7.06e-02	4.0	0.8	0.1	-0.2
2358	ok	0.23	5.88e-02	3.24e-03	4.7	4.7	4.7	4.7	-5.0	9.61e-02	-4.7	-0.9	-0.3	0.3
2359	ok	0.23	3.22e-02	3.21e-03	4.7	4.7	4.7	4.7	-4.7	0.1	4.4	0.8	0.1	-0.2
2360	ok	0.23	5.87e-02	3.13e-03	4.7	4.7	4.7	4.7	-5.0	6.64e-02	4.5	-0.9	-0.3	-0.3
2361	ok	0.23	3.54e-02	3.55e-03	4.7	4.7	4.7	4.7	-5.5	-8.68e-02	4.8	0.8	0.1	-0.2
2362	ok	0.23	5.99e-02	3.44e-03	4.7	4.7	4.7	4.7	-3.0	-8.70e-02	-3.9	-0.9	-0.3	0.3
2363	ok	0.23	3.90e-02	3.71e-03	4.7	4.7	4.7	4.7	-6.1	-0.4	4.6	0.8	0.1	-0.2
2364	ok	0.23	6.29e-02	3.53e-03	4.7	4.7	4.7	4.7	-2.0	-0.2	-4.2	-0.9	-0.3	0.3
2365	ok	0.23	4.27e-02	3.67e-03	4.7	4.7	4.7	4.7	-6.5	-0.6	4.2	0.8	0.1	-0.2
2366	ok	0.23	6.71e-02	3.56e-03	4.7	4.7	4.7	4.7	-0.7	-0.2	-4.8	-0.9	-0.3	0.3
2367	ok	0.23	4.56e-02	3.67e-03	4.7	4.7	4.7	4.7	-7.3	-0.5	3.7	0.7	0.1	-0.2
2368	ok	0.23	6.91e-02	3.57e-03	4.7	4.7	4.7	4.7	0.1	4.03e-02	-5.1	-0.8	-0.3	0.3
2369	ok	0.23	4.81e-02	3.72e-03	4.7	4.7	4.7	4.7	-7.5	-0.4	3.5	0.7	0.1	-0.2
2370	ok	0.23	7.00e-02	3.65e-03	4.7	4.7	4.7	4.7	0.8	0.3	-4.7	-0.8	-0.3	0.4
2371	ok	0.23	5.06e-02	3.74e-03	4.7	4.7	4.7	4.7	-7.3	-0.2	3.8	0.7	0.1	-0.2
2372	ok	0.23	6.89e-02	3.64e-03	4.7	4.7	4.7	4.7	1.5	0.3	-4.1	-0.8	-0.3	0.3
2373	ok	0.23	5.22e-02	3.62e-03	4.7	4.7	4.7	4.7	-6.6	-0.2	4.1	0.7	0.1	-0.2
2374	ok	0.23	6.84e-02	3.47e-03	4.7	4.7	4.7	4.7	2.1	0.2	-3.8	-0.8	-0.3	0.3
2375	ok	0.23	5.35e-02	3.24e-03	4.7	4.7	4.7	4.7	-5.4	-0.4	3.8	0.6	0.1	-0.2
2376	ok	0.23	6.98e-02	3.02e-03	4.7	4.7	4.7	4.7	2.5	0.2	-4.1	-0.8	-0.3	0.3
2377	ok	0.23	5.44e-02	2.72e-03	4.7	4.7	4.7	4.7	-3.5	-0.3	3.1	0.6	0.1	-0.2
2378	ok	0.23	6.96e-02	2.32e-03	4.7	4.7	4.7	4.7	2.4	0.3	-4.5	-0.8	-0.3	0.3
2379	ok	0.23	5.35e-02	1.98e-03	4.7	4.7	4.7	4.7	1.6	0.7	-5.7	0.9	0.1	0.1
2380	ok	0.23	6.33e-02	1.74e-03	4.7	4.7	4.7	4.7	-0.2	1.0	2.2	-0.9	-0.4	-0.1
2381	ok	0.23	5.62e-02	1.42e-03	4.7	4.7	4.7	4.7	-1.73e-02	1.2	-3.5	1.0	0.4	3.87e-02
2382	ok	0.23	2.11e-02	9.22e-04	4.7	4.7	4.7	4.7	1.1	1.2	-3.2	0.2	-0.2	-4.47e-03
2383	ok	0.23	3.25e-02	1.58e-03	4.7	4.7	4.7	4.7	2.3	-0.1	3.7	0.2	0.2	-0.3
2384	ok	0.23	2.86e-02	2.07e-03	4.7	4.7	4.7	4.7	-3.2	-0.3	-3.0	0.2	5.69e-02	9.73e-02
2385	ok	0.23	4.21e-02	2.35e-03	4.7	4.7	4.7	4.7	3.5	0.5	4.9	0.2	0.2	-0.3
2386	ok	0.23	3.10e-02	3.15e-03	4.7	4.7	4.7	4.7	-6.1	-0.6	-3.4	0.2	6.31e-02	0.1
2387	ok	0.23	4.32e-02	3.43e-03	4.7	4.7	4.7	4.7	3.9	0.6	4.7	0.2	0.1	-0.4
2388	ok	0.23	2.28e-02	4.02e-03	4.7	4.7	4.7	4.7	3.3	1.1	4.5	8.79e-02	-5.48e-03	-0.1
2389	ok	0.23	3.48e-02	4.20e-03	4.7	4.7	4.7	4.7	3.4	0.6	4.4	0.2	0.1	-0.4
2390	ok	0.23	2.24e-02	4.58e-03	4.7	4.7	4.7	4.7	2.9	1.0	4.4	9.94e-02	-5.15e-03	-0.1
2391	ok	0.23	3.81e-02	4.58e-03	4.7	4.7	4.7	4.7	-9.9	-0.6	-3.5	-0.1	0.2	0.3
2392	ok	0.23	2.93e-02	4.79e-03	4.7	4.7	4.7	4.7	2.3	1.0	4.6	-0.1	-9.23e-03	-0.1
2393	ok	0.23	3.85e-02	4.66e-03	4.7	4.7	4.7	4.7	1.8	0.5	5.0	-9.98e-02	0.1	-0.4
2394	ok	0.23	2.92e-02	4.75e-03	4.7	4.7	4.7	4.7	1.7	0.9	4.9	-0.1	-1.10e-02	-0.1
2395	ok	0.23	3.83e-02	4.53e-03	4.7	4.7	4.7	4.7	1.1	0.5	5.1	-0.1	0.1	-0.4
2396	ok	0.23	2.82e-02	4.57e-03	4.7	4.7	4.7	4.7	1.1	0.8	4.9	-0.1	-1.68e-02	-0.1
2397	ok	0.23	3.58e-02	4.38e-03	4.7	4.7	4.7	4.7	0.1	0.3	4.8	-0.1	0.1	-0.4
2398	ok	0.23	2.43e-02	4.42e-03	4.7	4.7	4.7	4.7	-0.8	0.6	4.5	-0.1	-2.05e-02	-0.1
2399	ok	0.23	3.06e-02	4.28e-03	4.7	4.7	4.7	4.7	-8.6	-0.3	-4.3	-0.2	9.62e-02	0.4
2400	ok	0.23	2.05e-02	4.29e-03	4.7	4.7	4.7	4.7	-2.3	0.3	4.1	-0.1	-1.96e-02	-0.1
2401	ok	0.23	2.71e-02	4.14e-03	4.7	4.7	4.7	4.7	-7.8	-0.2	-4.7	-0.2	9.93e-02	0.4
2402	ok	0.23	1.70e-02	4.07e-03	4.7	4.7	4.7	4.7	-3.9	0.1	4.0	-0.1	-1.59e-02	-0.1
2403	ok	0.23	2.47e-02	3.81e-03	4.7	4.7	4.7	4.7	-6.9	-0.1	-4.6	-0.1	0.1	0.4
2404	ok	0.23	1.46e-02	3.97e-03	4.7	4.7	4.7	4.7	-5.6	-8.85e-02	-4.3	-0.1	-1.70e-02	0.1
2405	ok	0.23	2.49e-02	3.82e-03	4.7	4.7	4.7	4.7	-6.8	-0.1	4.4	-0.1	0.1	-0.4
2406	ok	0.23	1.67e-02	4.01e-03	4.7	4.7	4.7	4.7	-4.2	5.12e-02	-4.0	-0.1	-1.59e-02	0.1
2407	ok	0.23	2.70e-02	4.09e-03	4.7	4.7	4.7	4.7	-7.8	-0.2	4.6	-0.2	9.73e-02	-0.4
2408	ok	0.23	2.00e-02	4.28e-03	4.7	4.7	4.7	4.7	-2.7	0.3	-4.1	-0.1	-2.03e-02	0.1
2409	ok	0.23	3.04e-02	4.25e-03	4.7	4.7	4.7	4.7	-2.4	0.1	-4.3	-0.1	0.1	0.4
2410	ok	0.23	2.35e-02	4.43e-03	4.7	4.7	4.7	4.7	-1.3	0.5	-4.6	-0.1	-2.15e-02	0.1
2411	ok	0.23	3.50e-02	4.39e-03	4.7	4.7	4.7	4.7	-0.5	0.3	-4.8	-0.1	0.1	0.4
2412	ok	0.23	2.71e-02	4.59e-03	4.7	4.7	4.7	4.7	0.5	0.7	-4.9	-0.1	-1.79e-02	0.1
2413	ok	0.23	3.75e-02	4.55e-03	4.7	4.7	4.7	4.7	0.6	0.4	-5.1	-0.1	0.1	0.4
2414	ok	0.23	2.81e-02	4.77e-03	4.7	4.7	4.7	4.7	1.3	0.9	-4.8	-0.1	-1.17e-02	0.1
2415	ok	0.23	3.77e-02	4.67e-03	4.7	4.7	4.7	4.7	1.4	0.5	-4.9	-0.1	0.1	0.4

2416	ok	0.23	2.85e-02	4.78e-03	4.7	4.7	4.7	4.7	2.0	1.0	-4.5	-0.1	-9.41e-03	0.1
2417	ok	0.23	3.76e-02	4.57e-03	4.7	4.7	4.7	4.7	-9.9	-0.6	3.5	-0.1	0.2	-0.3
2418	ok	0.23	2.21e-02	4.55e-03	4.7	4.7	4.7	4.7	2.8	1.0	-4.3	0.1	-4.69e-03	0.1
2419	ok	0.23	3.47e-02	4.17e-03	4.7	4.7	4.7	4.7	3.3	0.6	-4.3	0.2	0.1	0.4
2420	ok	0.23	2.28e-02	3.99e-03	4.7	4.7	4.7	4.7	3.3	1.1	-4.5	9.06e-02	-4.53e-03	0.1
2421	ok	0.23	4.32e-02	3.40e-03	4.7	4.7	4.7	4.7	3.8	0.6	-4.6	0.2	0.1	0.4
2422	ok	0.23	3.10e-02	3.12e-03	4.7	4.7	4.7	4.7	-6.0	-0.6	3.3	0.2	6.27e-02	-0.1
2423	ok	0.23	4.22e-02	2.31e-03	4.7	4.7	4.7	4.7	3.5	0.5	-4.9	0.2	0.2	0.4
2424	ok	0.23	2.88e-02	2.05e-03	4.7	4.7	4.7	4.7	-3.2	-0.3	2.9	0.2	5.68e-02	-9.62e-02
2425	ok	0.23	3.26e-02	1.57e-03	4.7	4.7	4.7	4.7	2.3	-0.1	-3.6	0.2	0.2	0.3
2426	ok	0.23	2.09e-02	9.16e-04	4.7	4.7	4.7	4.7	0.6	0.7	-2.5	-3.89e-03	6.73e-02	9.94e-02

Nodo	**x/d**	**V N/M**	**ver. rid**	**Af pr-**	**Af pr+**	**Af sec-**	**Af sec+**	**N x**	**N y**	**N xy**	**M x**	**M y**	**M xy**
								-9.93	-1.72	-5.66	-4.46	-0.66	-0.57
	0.23	0.30	4.79e-03	4.67	4.67	4.67	4.67	6.69	3.09	5.50	5.19	0.88	0.48

Nodo	**Stato**	**Max tau**	**Ver V pr**	**Ver V sec**	**Af V pr**	**Af V sec**	**V pr**	**V sec**
		kN/ m2					kN/ m	kN/ m
2157	ok	1.96						
2158	ok	1.91						
2159	ok	1.71						
2160	ok	1.67						
2161	ok	1.75						
2162	ok	1.70						
2163	ok	1.74						
2164	ok	1.70						
2165	ok	1.74						
2166	ok	1.71						
2167	ok	1.88						
2168	ok	1.83						
2169	ok	1.78						
2170	ok	1.74						
2171	ok	1.79						
2172	ok	1.74						
2173	ok	1.79						
2174	ok	1.73						
2175	ok	1.77						
2176	ok	1.72						
2177	ok	1.77						
2178	ok	1.84						
2179	ok	1.89						
2180	ok	1.83						
2181	ok	1.77						
2182	ok	1.73						
2183	ok	1.79						
2184	ok	1.75						
2185	ok	1.81						
2186	ok	1.76						
2187	ok	1.81						
2188	ok	1.76						
2189	ok	1.80						
2190	ok	1.86						
2191	ok	1.90						
2192	ok	1.74						
2193	ok	1.76						
2194	ok	1.72						
2195	ok	1.76						
2196	ok	1.72						
2197	ok	1.77						
2198	ok	1.69						
2199	ok	1.73						
2200	ok	1.94						
2201	ok	1.98						
2202	ok	1.21						
2203	ok	1.23						
2204	ok	1.14						
2205	ok	1.19						
2206	ok	1.17						
2207	ok	1.21						
2208	ok	1.17						
2209	ok	1.21						
2210	ok	1.16						
2211	ok	1.20						
2212	ok	1.11						
2213	ok	1.15						
2214	ok	1.20						
2215	ok	1.24						

2216	ok	1.20
2217	ok	1.24
2218	ok	1.19
2219	ok	1.23
2220	ok	1.18
2221	ok	1.22
2222	ok	1.18
2223	ok	1.20
2224	ok	1.10
2225	ok	1.21
2226	ok	1.17
2227	ok	1.23
2228	ok	1.19
2229	ok	1.24
2230	ok	1.21
2231	ok	1.25
2232	ok	1.21
2233	ok	1.25
2234	ok	1.21
2235	ok	1.17
2236	ok	1.12
2237	ok	1.22
2238	ok	1.18
2239	ok	1.22
2240	ok	1.18
2241	ok	1.22
2242	ok	1.18
2243	ok	1.20
2244	ok	1.16
2245	ok	1.24
2246	ok	1.23
2247	ok	1.00
2248	ok	0.97
2249	ok	0.91
2250	ok	0.93
2251	ok	0.93
2252	ok	0.94
2253	ok	0.93
2254	ok	0.95
2255	ok	0.90
2256	ok	0.91
2257	ok	0.93
2258	ok	0.95
2259	ok	0.94
2260	ok	0.96
2261	ok	0.95
2262	ok	0.96
2263	ok	0.95
2264	ok	0.96
2265	ok	0.94
2266	ok	0.95
2267	ok	0.93
2268	ok	0.94
2269	ok	0.92
2270	ok	0.94
2271	ok	0.92
2272	ok	0.96
2273	ok	0.95
2274	ok	0.97
2275	ok	0.96
2276	ok	0.97
2277	ok	0.95
2278	ok	0.97
2279	ok	0.95
2280	ok	0.96
2281	ok	0.94
2282	ok	0.92
2283	ok	0.91
2284	ok	0.96
2285	ok	0.94
2286	ok	0.95
2287	ok	0.94
2288	ok	0.94
2289	ok	0.92
2290	ok	0.98
2291	ok	1.01
2292	ok	0.70
2293	ok	0.68

2294	ok	0.63
2295	ok	0.66
2296	ok	0.64
2297	ok	0.66
2298	ok	0.64
2299	ok	0.66
2300	ok	0.63
2301	ok	0.66
2302	ok	0.62
2303	ok	0.65
2304	ok	0.64
2305	ok	0.67
2306	ok	0.64
2307	ok	0.67
2308	ok	0.64
2309	ok	0.67
2310	ok	0.64
2311	ok	0.66
2312	ok	0.62
2313	ok	0.65
2314	ok	0.61
2315	ok	0.65
2316	ok	0.62
2317	ok	0.67
2318	ok	0.64
2319	ok	0.67
2320	ok	0.64
2321	ok	0.67
2322	ok	0.65
2323	ok	0.67
2324	ok	0.65
2325	ok	0.66
2326	ok	0.63
2327	ok	0.66
2328	ok	0.64
2329	ok	0.67
2330	ok	0.64
2331	ok	0.67
2332	ok	0.64
2333	ok	0.66
2334	ok	0.64
2335	ok	0.69
2336	ok	0.71
2337	ok	0.46
2338	ok	0.53
2339	ok	0.40
2340	ok	0.52
2341	ok	0.41
2342	ok	0.53
2343	ok	0.41
2344	ok	0.53
2345	ok	0.41
2346	ok	0.52
2347	ok	0.41
2348	ok	0.52
2349	ok	0.41
2350	ok	0.52
2351	ok	0.41
2352	ok	0.52
2353	ok	0.41
2354	ok	0.51
2355	ok	0.41
2356	ok	0.51
2357	ok	0.40
2358	ok	0.50
2359	ok	0.39
2360	ok	0.50
2361	ok	0.40
2362	ok	0.51
2363	ok	0.41
2364	ok	0.52
2365	ok	0.41
2366	ok	0.52
2367	ok	0.42
2368	ok	0.52
2369	ok	0.42
2370	ok	0.53
2371	ok	0.41

2372	ok	0.53
2373	ok	0.41
2374	ok	0.53
2375	ok	0.42
2376	ok	0.53
2377	ok	0.41
2378	ok	0.52
2379	ok	0.41
2380	ok	0.53
2381	ok	0.47
2382	ok	0.32
2383	ok	0.31
2384	ok	0.28
2385	ok	0.29
2386	ok	0.33
2387	ok	0.28
2388	ok	0.32
2389	ok	0.28
2390	ok	0.31
2391	ok	0.28
2392	ok	0.31
2393	ok	0.28
2394	ok	0.30
2395	ok	0.27
2396	ok	0.29
2397	ok	0.27
2398	ok	0.28
2399	ok	0.27
2400	ok	0.28
2401	ok	0.27
2402	ok	0.27
2403	ok	0.27
2404	ok	0.27
2405	ok	0.27
2406	ok	0.27
2407	ok	0.28
2408	ok	0.28
2409	ok	0.28
2410	ok	0.28
2411	ok	0.28
2412	ok	0.29
2413	ok	0.28
2414	ok	0.30
2415	ok	0.28
2416	ok	0.31
2417	ok	0.28
2418	ok	0.31
2419	ok	0.28
2420	ok	0.32
2421	ok	0.29
2422	ok	0.33
2423	ok	0.29
2424	ok	0.28
2425	ok	0.31
2426	ok	0.32

Nodo	Max tau	Ver V pr	Ver V sec	Af V pr	Af V sec	V pr	V sec
	1.98						

Macro Guscio	Spessore	Id Materiale	Id Criterio	Progettazione
	cm			
29	20.00	1	3	Singolo elemento

Nodo	Stato	x/d	V N/M	ver. rid	Af pr-	Af pr+	Af sec-	Af sec+	N x	N y	N xy	M x	M y	M xy
									kN/ m	kN/ m	kN/ m	kN	kN	kN
2609	ok	0.18	9.83e-02	1.91e-03	6.2	6.2	6.2	6.2	3.3	-3.9	-0.8	1.3	-3.0	-1.1
2610	ok	0.18	0.2	2.24e-03	6.2	6.2	6.2	6.2	3.1	-0.1	6.4	4.1	2.8	-2.0
2611	ok	0.18	0.2	0.0	6.2	6.2	6.2	6.2	25.1	5.6	4.6	-4.7	-1.0	-1.4
2612	ok	0.18	0.2	1.12e-03	6.2	6.2	6.2	6.2	17.3	-1.8	-2.1	-6.5	-0.2	-0.5
2613	ok	0.18	0.2	3.12e-04	6.2	6.2	6.2	6.2	15.8	1.96e-02	-0.2	-6.1	0.1	-0.9
2614	ok	0.18	0.2	4.40e-04	6.2	6.2	6.2	6.2	18.4	0.5	-0.8	-6.8	-0.1	0.3
2615	ok	0.18	0.2	8.18e-04	6.2	6.2	6.2	6.2	19.5	0.5	-0.8	-6.5	-0.1	0.8
2616	ok	0.18	0.2	1.32e-03	6.2	6.2	6.2	6.2	20.5	0.5	-0.6	-5.4	-0.1	1.4

2617	ok	0.18	0.1	1.56e-03	6.2	6.2	6.2	6.2	14.0	0.3	0.2	-3.2	0.1	1.5
2618	ok	0.18	0.2	2.32e-03	6.2	6.2	6.2	6.2	27.0	-0.2	0.5	4.3	0.6	1.5
2619	ok	0.18	0.3	2.32e-03	6.2	6.2	6.2	6.2	15.4	2.4	1.1	10.9	3.0	-0.6
2620	ok	0.18	0.4	5.27e-03	6.2	6.2	6.2	6.2	-4.8	-0.3	0.4	14.5	-3.6	-1.8
2621	ok	0.18	0.3	7.07e-03	6.2	6.2	6.2	6.2	-3.7	-0.6	-0.2	8.4	2.7	0.6
2622	ok	0.18	0.2	6.79e-03	6.2	6.2	6.2	6.2	-19.2	-1.7	-3.5	4.3	0.5	-1.6
2623	ok	0.18	0.2	4.34e-03	6.2	6.2	6.2	6.2	14.1	0.3	-0.2	-3.4	9.89e-02	-1.7
2624	ok	0.18	0.2	3.48e-03	6.2	6.2	6.2	6.2	2.0	0.4	-0.3	-5.1	-0.1	-1.5
2625	ok	0.18	0.2	2.82e-03	6.2	6.2	6.2	6.2	3.3	0.4	-0.4	-6.1	-0.1	-1.0
2626	ok	0.18	0.2	2.13e-03	6.2	6.2	6.2	6.2	22.9	0.5	0.5	-6.3	-0.1	0.7
2627	ok	0.18	0.2	1.50e-03	6.2	6.2	6.2	6.2	22.8	0.8	0.3	-6.0	-0.2	1.1
2628	ok	0.18	0.2	8.63e-04	6.2	6.2	6.2	6.2	14.2	0.2	0.2	-4.9	0.1	1.4
2629	ok	0.18	0.1	4.05e-04	6.2	6.2	6.2	6.2	13.4	0.3	0.2	-2.8	0.1	1.8
2630	ok	0.18	0.2	2.33e-04	6.2	6.2	6.2	6.2	13.3	-0.1	1.8	4.5	0.6	1.7
2631	ok	0.18	0.3	4.32e-04	6.2	6.2	6.2	6.2	8.5	6.00e-02	-0.7	11.5	3.0	-0.3
2632	ok	0.18	0.5	1.26e-03	6.2	6.2	6.2	6.2	13.1	-0.9	6.2	17.6	-2.2	-0.7
2633	ok	0.18	0.3	0.0	6.2	6.2	6.2	6.2	23.3	3.9	2.4	7.9	2.2	-9.18e-02
2634	ok	0.18	0.2	8.08e-04	6.2	6.2	6.2	6.2	19.4	-1.5	-3.1	3.6	0.4	-1.1
2635	ok	0.18	0.2	2.04e-04	6.2	6.2	6.2	6.2	20.4	0.1	-0.3	-3.2	9.78e-02	-1.8
2636	ok	0.18	0.2	1.87e-04	6.2	6.2	6.2	6.2	25.2	0.7	-0.4	-5.0	-0.1	-1.6
2637	ok	0.18	0.2	1.87e-04	6.2	6.2	6.2	6.2	26.6	0.8	-0.2	-6.1	-0.2	-1.1
2638	ok	0.18	0.2	2.19e-04	6.2	6.2	6.2	6.2	26.6	0.5	-0.4	-6.3	-0.1	-0.6
2639	ok	0.18	0.2	5.70e-04	6.2	6.2	6.2	6.2	14.2	0.4	0.4	-6.1	-0.1	1.0
2640	ok	0.18	0.2	1.09e-03	6.2	6.2	6.2	6.2	20.5	0.2	0.2	-5.3	0.1	1.3
2641	ok	0.18	0.2	1.73e-03	6.2	6.2	6.2	6.2	20.3	0.1	0.3	-3.3	0.1	1.8
2642	ok	0.18	0.2	3.86e-03	6.2	6.2	6.2	6.2	-9.5	-1.9	4.1	4.1	0.5	1.7
2643	ok	0.18	0.3	2.55e-03	6.2	6.2	6.2	6.2	2.6	1.8	2.6	8.8	2.7	-0.4
2644	ok	0.18	0.4	3.78e-03	6.2	6.2	6.2	6.2	0.6	-0.3	-5.3	14.4	-3.7	1.6
2645	ok	0.18	0.3	4.39e-03	6.2	6.2	6.2	6.2	7.3	-0.6	1.7	9.7	1.2	-0.4
2646	ok	0.18	0.2	3.10e-03	6.2	6.2	6.2	6.2	19.4	1.0	2.90e-02	3.9	0.5	-1.0
2647	ok	0.18	0.1	2.17e-03	6.2	6.2	6.2	6.2	11.9	0.3	-0.2	-3.2	0.1	-1.5
2648	ok	0.18	0.2	1.65e-03	6.2	6.2	6.2	6.2	18.9	0.5	0.7	-5.4	-0.1	-1.3
2649	ok	0.18	0.2	9.52e-04	6.2	6.2	6.2	6.2	18.1	0.5	0.8	-6.4	-0.1	-0.8
2650	ok	0.18	0.2	4.64e-04	6.2	6.2	6.2	6.2	17.1	0.5	0.8	-6.7	-0.1	-0.2
2651	ok	0.18	0.2	3.14e-04	6.2	6.2	6.2	6.2	15.0	3.41e-02	0.2	-6.0	0.1	0.9
2652	ok	0.18	0.2	1.06e-03	6.2	6.2	6.2	6.2	10.4	-1.8	2.1	-6.3	-0.2	0.5
2653	ok	0.18	0.2	0.0	6.2	6.2	6.2	6.2	17.6	5.1	-4.3	-4.5	-1.0	1.4
2654	ok	0.18	0.2	2.12e-03	6.2	6.2	6.2	6.2	3.2	-0.2	-6.1	4.1	2.8	1.9
2655	ok	0.18	9.53e-02	1.82e-03	6.2	6.2	6.2	6.2	3.0	-3.8	0.8	1.2	-3.0	1.1
2656	ok	0.18	0.2	1.56e-03	6.2	6.2	6.2	6.2	0.4	-2.9	-1.2	1.4	5.6	-2.7
2657	ok	0.18	0.4	7.63e-03	6.2	6.2	6.2	6.2	12.0	-6.4	4.7	9.4	9.7	1.2
2658	ok	0.18	0.3	1.18e-03	6.2	6.2	6.2	6.2	14.9	1.04e-02	4.4	-9.0	-1.4	-2.8
2659	ok	0.18	0.2	1.36e-03	6.2	6.2	6.2	6.2	15.2	1.0	3.3	-4.4	-0.6	-2.7
2660	ok	0.18	0.2	1.33e-03	6.2	6.2	6.2	6.2	12.9	0.4	0.5	-5.7	-1.0	-1.8
2661	ok	0.18	0.2	1.36e-03	6.2	6.2	6.2	6.2	16.9	2.2	-1.5	-6.2	-1.4	0.2
2662	ok	0.18	0.2	1.33e-03	6.2	6.2	6.2	6.2	16.5	1.6	-1.8	-6.0	-1.5	1.1
2663	ok	0.18	0.2	1.48e-03	6.2	6.2	6.2	6.2	17.3	1.5	-1.4	-5.0	-1.3	1.9
2664	ok	0.18	0.2	1.63e-03	6.2	6.2	6.2	6.2	11.5	-5.17e-02	0.4	-2.9	-0.7	2.8
2665	ok	0.18	0.1	1.73e-03	6.2	6.2	6.2	6.2	16.9	2.2	1.4	1.5	0.3	2.7
2666	ok	0.18	0.3	2.10e-03	6.2	6.2	6.2	6.2	20.4	0.3	-0.3	10.0	2.3	2.5
2667	ok	0.18	0.8	5.11e-03	6.2	6.2	6.2	6.2	15.7	-3.3	1.7	24.7	15.0	-3.7
2668	ok	0.18	0.3	4.93e-03	6.2	6.2	6.2	6.2	-3.8	-2.1	0.7	10.0	4.1	-0.7
2669	ok	0.18	0.1	4.16e-03	6.2	6.2	6.2	6.2	-10.7	-0.5	-2.8	1.1	-0.2	-3.4
2670	ok	0.18	0.2	3.94e-03	6.2	6.2	6.2	6.2	11.4	-8.95e-02	-0.6	-3.1	-0.7	-3.3
2671	ok	0.18	0.2	3.22e-03	6.2	6.2	6.2	6.2	1.4	1.2	-1.2	-4.7	-1.3	-2.2
2672	ok	0.18	0.2	2.57e-03	6.2	6.2	6.2	6.2	2.6	1.2	-1.0	-5.6	-1.5	-1.3
2673	ok	0.18	0.2	2.00e-03	6.2	6.2	6.2	6.2	19.3	1.6	1.7	-5.8	-1.5	0.8
2674	ok	0.18	0.2	1.68e-03	6.2	6.2	6.2	6.2	19.2	1.8	1.6	-5.5	-1.5	1.6
2675	ok	0.18	0.2	1.26e-03	6.2	6.2	6.2	6.2	17.6	1.7	2.0	-4.4	-1.2	2.5
2676	ok	0.18	0.2	8.73e-04	6.2	6.2	6.2	6.2	10.7	-0.3	0.9	-2.5	-0.6	3.5
2677	ok	0.18	0.2	1.07e-03	6.2	6.2	6.2	6.2	11.7	2.2	3.5	2.0	0.5	3.1
2678	ok	0.18	0.3	2.38e-03	6.2	6.2	6.2	6.2	9.8	-2.3	4.76e-02	10.0	2.2	2.8
2679	ok	0.18	0.7	4.28e-03	6.2	6.2	6.2	6.2	6.2	-4.2	8.1	25.0	15.7	-3.2
2680	ok	0.18	0.3	7.27e-04	6.2	6.2	6.2	6.2	15.2	0.5	-1.3	9.9	2.2	-1.2
2681	ok	0.18	0.1	4.17e-04	6.2	6.2	6.2	6.2	18.2	-0.2	0.1	1.3	-4.21e-02	-3.5
2682	ok	0.18	0.2	4.60e-04	6.2	6.2	6.2	6.2	17.2	0.1	-0.1	-2.9	-0.6	-3.4
2683	ok	0.18	0.2	4.83e-04	6.2	6.2	6.2	6.2	21.5	1.8	-1.5	-4.6	-1.2	-2.4
2684	ok	0.18	0.2	5.37e-04	6.2	6.2	6.2	6.2	22.8	1.8	-1.4	-5.6	-1.5	-1.5
2685	ok	0.18	0.2	4.36e-04	6.2	6.2	6.2	6.2	23.9	1.9	-0.8	-6.0	-1.6	-0.5
2686	ok	0.18	0.2	5.66e-04	6.2	6.2	6.2	6.2	12.0	1.3	1.0	-5.6	-1.5	1.4
2687	ok	0.18	0.2	1.02e-03	6.2	6.2	6.2	6.2	17.3	0.1	-0.2	-4.8	-0.9	2.5
2688	ok	0.18	0.2	1.55e-03	6.2	6.2	6.2	6.2	17.2	0.1	0.1	-3.1	-0.7	3.4
2689	ok	0.18	0.1	1.54e-03	6.2	6.2	6.2	6.2	5.0	2.0	1.2	1.3	0.4	3.1
2690	ok	0.18	0.3	2.95e-03	6.2	6.2	6.2	6.2	-6.3	0.9	-0.2	10.4	2.1	2.1
2691	ok	0.18	0.7	4.60e-03	6.2	6.2	6.2	6.2	10.7	-3.8	-7.0	23.8	15.0	3.3
2692	ok	0.18	0.3	3.25e-03	6.2	6.2	6.2	6.2	15.1	-0.7	1.5	9.8	2.4	-1.4
2693	ok	0.18	0.1	2.63e-03	6.2	6.2	6.2	6.2	14.7	-1.8	-0.7	1.4	-9.57e-02	-2.9
2694	ok	0.18	0.2	2.29e-03	6.2	6.2	6.2	6.2	9.5	-0.2	-1.0	-2.9	-0.7	-2.8

2695	ok	0.18	0.2	1.87e-03	6.2	6.2	6.2	6.2	15.9	1.5	1.3	-5.0	-1.3	-1.9
2696	ok	0.18	0.2	1.56e-03	6.2	6.2	6.2	6.2	15.3	1.6	1.7	-6.0	-1.5	-1.0
2697	ok	0.18	0.2	1.48e-03	6.2	6.2	6.2	6.2	14.5	1.7	1.9	-6.3	-1.4	-0.1
2698	ok	0.18	0.2	1.39e-03	6.2	6.2	6.2	6.2	12.1	0.4	-0.6	-5.6	-1.0	1.8
2699	ok	0.18	0.2	1.37e-03	6.2	6.2	6.2	6.2	14.4	0.8	-3.2	-4.3	-0.6	2.7
2700	ok	0.18	0.3	1.15e-03	6.2	6.2	6.2	6.2	6.5	2.4	1.4	-8.6	-1.4	2.1
2701	ok	0.18	0.4	7.33e-03	6.2	6.2	6.2	6.2	12.9	-6.1	-4.6	9.6	9.5	-1.3
2702	ok	0.18	0.2	1.51e-03	6.2	6.2	6.2	6.2	-1.5	-1.5	0.5	1.3	5.9	2.7
2703	ok	0.18	0.1	4.47e-03	6.2	6.2	6.2	6.2	1.4	-3.5	-1.1	-1.5	-2.4	-1.6
2704	ok	0.18	0.3	3.59e-03	6.2	6.2	6.2	6.2	5.4	-2.4	-6.0	1.2	5.3	-2.3
2705	ok	0.18	0.2	3.00e-03	6.2	6.2	6.2	6.2	7.9	5.0	-3.0	-3.0	-0.7	-3.1
2706	ok	0.18	0.2	2.64e-03	6.2	6.2	6.2	6.2	7.7	5.6	-3.2	-4.5	-2.2	-2.3
2707	ok	0.18	0.2	2.47e-03	6.2	6.2	6.2	6.2	9.9	4.2	-3.4	-5.2	-2.7	-1.3
2708	ok	0.18	0.2	2.06e-03	6.2	6.2	6.2	6.2	8.1	3.4	4.86e-02	-4.9	-3.0	-0.4
2709	ok	0.18	0.2	2.05e-03	6.2	6.2	6.2	6.2	12.5	2.6	-2.9	-4.9	-3.0	1.0
2710	ok	0.18	0.2	1.98e-03	6.2	6.2	6.2	6.2	13.2	2.3	-2.2	-4.1	-2.9	2.0
2711	ok	0.18	0.2	1.96e-03	6.2	6.2	6.2	6.2	13.7	2.0	-1.4	-2.3	-2.5	2.7
2712	ok	0.18	0.1	2.14e-03	6.2	6.2	6.2	6.2	15.6	2.0	-9.78e-02	1.9	-1.6	3.2
2713	ok	0.18	0.3	2.28e-03	6.2	6.2	6.2	6.2	14.1	-0.2	1.6	7.9	1.7	3.1
2714	ok	0.18	0.3	2.25e-03	6.2	6.2	6.2	6.2	-0.5	-0.9	0.7	10.0	2.8	-0.6
2715	ok	0.18	0.3	2.78e-03	6.2	6.2	6.2	6.2	-2.0	-0.8	-2.7	6.2	1.7	-4.1
2716	ok	0.18	0.1	2.91e-03	6.2	6.2	6.2	6.2	-1.4	1.6	-1.9	1.5	-1.5	-3.6
2717	ok	0.18	0.2	2.69e-03	6.2	6.2	6.2	6.2	9.1	2.8	2.88e-02	-2.7	-2.3	-2.7
2718	ok	0.18	0.2	2.54e-03	6.2	6.2	6.2	6.2	0.9	2.3	-2.0	-3.7	-2.7	-2.3
2719	ok	0.18	0.2	2.13e-03	6.2	6.2	6.2	6.2	1.8	2.2	-1.6	-4.4	-2.8	-1.4
2720	ok	0.18	0.2	1.72e-03	6.2	6.2	6.2	6.2	14.6	2.3	1.9	-4.6	-2.9	0.8
2721	ok	0.18	0.2	1.51e-03	6.2	6.2	6.2	6.2	14.6	2.5	2.0	-4.4	-2.8	1.6
2722	ok	0.18	0.2	1.56e-03	6.2	6.2	6.2	6.2	13.4	2.4	3.4	-3.6	-2.6	2.6
2723	ok	0.18	0.2	1.25e-03	6.2	6.2	6.2	6.2	12.1	2.1	4.0	-2.0	-2.2	3.2
2724	ok	0.18	0.2	1.37e-03	6.2	6.2	6.2	6.2	10.5	1.6	4.7	2.1	-1.4	3.7
2725	ok	0.18	0.3	1.97e-03	6.2	6.2	6.2	6.2	7.1	-2.5	5.1	8.4	2.0	3.5
2726	ok	0.18	0.3	1.60e-03	6.2	6.2	6.2	6.2	8.4	-1.1	-2.7	10.3	2.8	-0.7
2727	ok	0.18	0.3	1.45e-03	6.2	6.2	6.2	6.2	10.0	0.6	-1.4	6.7	1.9	-4.1
2728	ok	0.18	0.1	8.20e-04	6.2	6.2	6.2	6.2	13.1	2.9	-3.2	1.6	-1.4	-3.7
2729	ok	0.18	0.2	8.34e-04	6.2	6.2	6.2	6.2	15.1	2.8	-2.9	-2.2	-2.2	-3.2
2730	ok	0.18	0.2	8.47e-04	6.2	6.2	6.2	6.2	16.3	2.8	-2.6	-3.7	-2.6	-2.5
2731	ok	0.18	0.2	7.55e-04	6.2	6.2	6.2	6.2	17.3	2.8	-1.5	-4.5	-2.8	-1.5
2732	ok	0.18	0.2	6.85e-04	6.2	6.2	6.2	6.2	17.4	2.6	-1.6	-4.6	-2.9	-0.7
2733	ok	0.18	0.2	6.35e-04	6.2	6.2	6.2	6.2	8.8	2.4	1.5	-4.4	-2.8	1.5
2734	ok	0.18	0.2	7.92e-04	6.2	6.2	6.2	6.2	5.7	2.5	1.7	-3.7	-2.6	2.4
2735	ok	0.18	0.2	1.03e-03	6.2	6.2	6.2	6.2	13.1	3.3	-0.5	-2.6	-2.3	2.8
2736	ok	0.18	0.1	1.16e-03	6.2	6.2	6.2	6.2	3.8	2.9	1.1	1.5	-1.4	3.7
2737	ok	0.18	0.3	2.03e-03	6.2	6.2	6.2	6.2	2.8	0.7	0.1	6.6	1.7	4.1
2738	ok	0.18	0.3	3.02e-03	6.2	6.2	6.2	6.2	0.8	-0.6	1.9	9.8	2.8	0.8
2739	ok	0.18	0.3	2.91e-03	6.2	6.2	6.2	6.2	12.1	-1.8	-3.9	7.7	1.8	-3.2
2740	ok	0.18	0.1	2.49e-03	6.2	6.2	6.2	6.2	13.9	1.8	-0.6	1.8	-1.6	-3.2
2741	ok	0.18	0.2	2.41e-03	6.2	6.2	6.2	6.2	12.7	2.0	1.0	-2.4	-2.5	-2.7
2742	ok	0.18	0.2	2.34e-03	6.2	6.2	6.2	6.2	12.3	2.3	1.9	-4.1	-2.9	-2.0
2743	ok	0.18	0.2	2.32e-03	6.2	6.2	6.2	6.2	11.6	2.6	2.7	-4.9	-3.0	-1.0
2744	ok	0.18	0.2	2.25e-03	6.2	6.2	6.2	6.2	7.5	3.3	-0.3	-4.9	-3.0	0.4
2745	ok	0.18	0.2	2.60e-03	6.2	6.2	6.2	6.2	9.1	4.1	3.4	-5.1	-2.7	1.3
2746	ok	0.18	0.2	2.73e-03	6.2	6.2	6.2	6.2	6.0	5.4	3.2	-4.4	-2.2	2.3
2747	ok	0.18	0.2	3.00e-03	6.2	6.2	6.2	6.2	7.3	4.8	3.1	-2.9	-0.7	3.0
2748	ok	0.18	0.3	3.62e-03	6.2	6.2	6.2	6.2	5.2	-2.2	5.8	1.4	5.3	2.2
2749	ok	0.18	0.1	4.28e-03	6.2	6.2	6.2	6.2	1.3	-2.9	1.1	-1.4	-2.3	1.6
2915	ok	0.18	0.2	5.27e-03	6.2	6.2	6.2	6.2	1.1	3.2	-1.6	-0.7	-5.3	-2.5
2916	ok	0.18	0.2	4.94e-03	6.2	6.2	6.2	6.2	2.0	6.4	-4.9	-1.4	-4.2	-3.1
2917	ok	0.18	0.2	4.20e-03	6.2	6.2	6.2	6.2	3.6	7.9	-6.2	-2.6	-4.5	-3.2
2918	ok	0.18	0.2	3.53e-03	6.2	6.2	6.2	6.2	6.0	6.9	-5.8	-3.5	-3.9	-2.4
2919	ok	0.18	0.2	3.18e-03	6.2	6.2	6.2	6.2	6.5	5.4	-5.6	-3.7	-3.8	-1.5
2920	ok	0.18	0.1	2.65e-03	6.2	6.2	6.2	6.2	5.2	4.3	-0.5	-3.5	-3.7	-0.7
2921	ok	0.18	0.2	2.60e-03	6.2	6.2	6.2	6.2	9.2	3.3	-3.8	-3.6	-3.8	0.9
2922	ok	0.18	0.2	2.43e-03	6.2	6.2	6.2	6.2	9.9	3.0	-2.9	-3.0	-3.8	1.9
2923	ok	0.18	0.2	2.34e-03	6.2	6.2	6.2	6.2	10.3	2.7	-2.0	-1.9	-3.9	2.7
2924	ok	0.18	0.2	2.21e-03	6.2	6.2	6.2	6.2	11.3	2.6	-0.8	1.0	-3.8	2.8
2925	ok	0.18	0.2	2.13e-03	6.2	6.2	6.2	6.2	11.4	2.1	-1.2	2.1	-4.7	2.0
2926	ok	0.18	0.1	2.07e-03	6.2	6.2	6.2	6.2	6.0	1.4	0.1	3.4	-4.2	-0.4
2927	ok	0.18	0.2	1.89e-03	6.2	6.2	6.2	6.2	-0.2	2.8	-1.3	2.7	-4.3	-2.0
2928	ok	0.18	0.2	1.94e-03	6.2	6.2	6.2	6.2	-0.2	3.1	-2.1	1.0	-3.4	-3.3
2929	ok	0.18	0.2	2.01e-03	6.2	6.2	6.2	6.2	0.1	3.1	-1.8	-1.8	-3.4	-3.0
2930	ok	0.18	0.2	1.97e-03	6.2	6.2	6.2	6.2	0.6	3.0	-2.0	-2.7	-3.2	-2.3
2931	ok	0.18	0.1	1.70e-03	6.2	6.2	6.2	6.2	2.9	2.8	-2.1	-3.1	-3.2	-1.3
2932	ok	0.18	0.1	1.51e-03	6.2	6.2	6.2	6.2	10.7	2.9	2.7	-3.2	-3.1	0.8
2933	ok	0.18	0.1	1.51e-03	6.2	6.2	6.2	6.2	10.6	3.0	3.0	-3.1	-3.2	1.6
2934	ok	0.18	0.2	1.47e-03	6.2	6.2	6.2	6.2	9.9	3.0	3.7	-2.6	-3.3	2.5
2935	ok	0.18	0.2	1.31e-03	6.2	6.2	6.2	6.2	9.2	2.8	4.2	-1.7	-3.5	3.2
2936	ok	0.18	0.2	1.44e-03	6.2	6.2	6.2	6.2	8.1	2.4	4.4	1.3	-3.5	3.3
2937	ok	0.18	0.2	1.63e-03	6.2	6.2	6.2	6.2	8.5	1.9	3.9	2.4	-4.5	2.4

2938	ok	0.18	0.1	1.41e-03	6.2	6.2	6.2	6.2	8.1	2.6	2.4	3.8	-3.9	-0.2
2939	ok	0.18	0.2	1.37e-03	6.2	6.2	6.2	6.2	7.5	2.9	-2.7	2.8	-4.4	-2.0
2940	ok	0.18	0.2	1.18e-03	6.2	6.2	6.2	6.2	8.9	3.6	-3.7	1.1	-3.4	-3.4
2941	ok	0.18	0.2	1.06e-03	6.2	6.2	6.2	6.2	10.7	3.8	-3.4	-1.8	-3.4	-3.2
2942	ok	0.18	0.2	9.83e-04	6.2	6.2	6.2	6.2	11.7	3.6	-3.0	-2.7	-3.3	-2.4
2943	ok	0.18	0.1	1.01e-03	6.2	6.2	6.2	6.2	12.5	3.4	-2.5	-3.1	-3.2	-1.5
2944	ok	0.18	0.1	9.86e-04	6.2	6.2	6.2	6.2	12.7	3.3	-2.4	-3.2	-3.1	-0.6
2945	ok	0.18	0.1	8.90e-04	6.2	6.2	6.2	6.2	6.1	3.3	1.5	-3.1	-3.1	1.4
2946	ok	0.18	0.2	9.52e-04	6.2	6.2	6.2	6.2	5.6	3.6	1.7	-2.7	-3.2	2.4
2947	ok	0.18	0.2	1.04e-03	6.2	6.2	6.2	6.2	3.4	3.7	1.4	-1.8	-3.4	3.1
2948	ok	0.18	0.2	1.03e-03	6.2	6.2	6.2	6.2	2.8	3.7	1.5	1.0	-3.4	3.4
2949	ok	0.18	0.2	1.26e-03	6.2	6.2	6.2	6.2	1.8	3.2	0.7	2.7	-4.3	2.1
2950	ok	0.18	0.1	1.91e-03	6.2	6.2	6.2	6.2	7.3	3.1	-0.4	3.4	-4.2	0.4
2951	ok	0.18	0.2	2.09e-03	6.2	6.2	6.2	6.2	11.2	1.8	0.6	2.1	-4.7	-2.1
2952	ok	0.18	0.2	2.38e-03	6.2	6.2	6.2	6.2	10.8	2.4	0.2	1.0	-3.8	-2.8
2953	ok	0.18	0.2	2.60e-03	6.2	6.2	6.2	6.2	9.9	2.6	1.6	-2.0	-3.9	-2.7
2954	ok	0.18	0.2	2.70e-03	6.2	6.2	6.2	6.2	9.4	2.8	2.5	-3.0	-3.8	-1.9
2955	ok	0.18	0.2	2.84e-03	6.2	6.2	6.2	6.2	8.7	3.2	3.6	-3.5	-3.8	-0.9
2956	ok	0.18	0.1	2.84e-03	6.2	6.2	6.2	6.2	4.9	4.1	0.2	-3.5	-3.7	0.7
2957	ok	0.18	0.2	3.34e-03	6.2	6.2	6.2	6.2	6.1	5.2	5.4	-3.6	-3.8	1.5
2958	ok	0.18	0.2	3.67e-03	6.2	6.2	6.2	6.2	5.7	6.7	5.7	-3.5	-3.9	2.4
2959	ok	0.18	0.2	4.32e-03	6.2	6.2	6.2	6.2	3.5	7.8	6.1	-2.6	-4.5	3.2
2960	ok	0.18	0.2	5.07e-03	6.2	6.2	6.2	6.2	1.9	6.6	4.8	-1.3	-4.2	3.1
2961	ok	0.18	0.2	5.42e-03	6.2	6.2	6.2	6.2	1.1	3.7	1.6	-0.7	-5.3	2.5
2962	ok	0.18	0.2	6.93e-03	6.2	6.2	6.2	6.2	-0.3	9.8	-0.9	-0.8	-7.3	-0.8
2963	ok	0.18	0.3	8.16e-03	6.2	6.2	6.2	6.2	2.5	18.0	-9.1	-2.2	-7.3	-2.0
2964	ok	0.18	0.2	4.65e-03	6.2	6.2	6.2	6.2	2.6	6.5	-8.0	-2.2	-5.3	-2.2
2965	ok	0.18	0.2	4.00e-03	6.2	6.2	6.2	6.2	5.1	10.4	-9.2	-2.3	-4.7	-1.4
2966	ok	0.18	0.1	3.45e-03	6.2	6.2	6.2	6.2	5.1	3.6	-6.5	-2.1	-3.3	-0.9
2967	ok	0.18	0.1	3.28e-03	6.2	6.2	6.2	6.2	6.7	6.4	-4.6	-2.2	-3.5	-5.52e-02
2968	ok	0.18	0.1	3.22e-03	6.2	6.2	6.2	6.2	-3.0	-1.4	2.5	0.8	4.6	-0.3
2969	ok	0.18	0.1	2.79e-03	6.2	6.2	6.2	6.2	7.8	5.6	-1.8	-2.0	-3.8	1.4
2970	ok	0.18	0.1	2.71e-03	6.2	6.2	6.2	6.2	6.6	1.1	-2.4	-1.1	-3.8	1.8
2971	ok	0.18	0.2	2.36e-03	6.2	6.2	6.2	6.2	8.1	6.1	-0.4	-0.9	-5.0	1.8
2972	ok	0.18	0.2	2.20e-03	6.2	6.2	6.2	6.2	6.8	1.3	-2.1	0.3	-5.0	1.0
2973	ok	0.18	0.2	2.33e-03	6.2	6.2	6.2	6.2	4.8	8.6	-1.8	0.2	-6.0	-0.4
2974	ok	0.18	0.2	1.71e-03	6.2	6.2	6.2	6.2	2.9	2.4	-1.8	0.4	-4.8	-1.2
2975	ok	0.18	0.2	1.86e-03	6.2	6.2	6.2	6.2	1.2	7.2	-3.4	-0.9	-4.4	-2.1
2976	ok	0.18	0.1	1.69e-03	6.2	6.2	6.2	6.2	3.6	2.2	0.4	-1.2	-3.0	-1.8
2977	ok	0.18	0.1	1.74e-03	6.2	6.2	6.2	6.2	1.8	6.1	-3.1	-1.8	-2.9	-1.7
2978	ok	0.18	0.1	2.00e-03	6.2	6.2	6.2	6.2	-3.6	-3.0	-1.9	0.7	4.3	-0.8
2979	ok	0.18	9.99e-02	2.00e-03	6.2	6.2	6.2	6.2	7.5	5.2	-0.6	-1.5	-2.3	0.7
2980	ok	0.18	0.1	2.36e-03	6.2	6.2	6.2	6.2	1.9	-2.9	2.5	0.6	4.3	0.9
2981	ok	0.18	0.1	2.27e-03	6.2	6.2	6.2	6.2	7.4	5.8	3.3	-1.8	-3.2	1.8
2982	ok	0.18	0.1	2.38e-03	6.2	6.2	6.2	6.2	5.5	1.3	2.5	-0.9	-3.3	2.2
2983	ok	0.18	0.2	2.44e-03	6.2	6.2	6.2	6.2	6.6	6.5	3.4	-0.8	-4.7	2.1
2984	ok	0.18	0.2	1.89e-03	6.2	6.2	6.2	6.2	5.0	1.5	0.9	0.4	-4.9	1.2
2985	ok	0.18	0.2	2.84e-03	6.2	6.2	6.2	6.2	5.5	8.2	-2.7	0.3	-5.8	-0.6
2986	ok	0.18	0.2	1.65e-03	6.2	6.2	6.2	6.2	4.5	2.3	-1.1	0.3	-4.8	-1.4
2987	ok	0.18	0.2	2.15e-03	6.2	6.2	6.2	6.2	6.8	7.5	-3.3	-0.9	-4.6	-2.1
2988	ok	0.18	0.1	1.70e-03	6.2	6.2	6.2	6.2	5.3	2.3	-2.2	-1.0	-3.2	-2.2
2989	ok	0.18	0.1	1.68e-03	6.2	6.2	6.2	6.2	8.4	6.6	-2.9	-1.8	-3.0	-1.8
2990	ok	0.18	0.1	1.70e-03	6.2	6.2	6.2	6.2	1.1	-2.4	-2.3	0.6	4.3	-0.9
2991	ok	0.18	0.1	1.46e-03	6.2	6.2	6.2	6.2	-0.9	-2.8	-7.36e-02	0.4	3.7	0.5
2992	ok	0.18	0.1	1.56e-03	6.2	6.2	6.2	6.2	-1.4	-2.3	1.8	0.7	4.4	0.8
2993	ok	0.18	0.1	1.44e-03	6.2	6.2	6.2	6.2	4.4	6.8	3.0	-1.8	-2.9	1.7
2994	ok	0.18	0.1	1.36e-03	6.2	6.2	6.2	6.2	5.6	2.8	-0.6	-1.2	-3.0	1.9
2995	ok	0.18	0.2	1.60e-03	6.2	6.2	6.2	6.2	3.3	7.9	3.2	-0.9	-4.4	2.1
2996	ok	0.18	0.2	1.17e-03	6.2	6.2	6.2	6.2	4.2	2.8	1.8	0.4	-4.8	1.2
2997	ok	0.18	0.2	2.33e-03	6.2	6.2	6.2	6.2	6.0	8.7	1.8	0.2	-6.0	0.4
2998	ok	0.18	0.2	1.96e-03	6.2	6.2	6.2	6.2	7.1	1.1	1.8	0.3	-5.1	-1.0
2999	ok	0.18	0.2	2.29e-03	6.2	6.2	6.2	6.2	8.2	5.9	0.1	-1.0	-5.0	-1.8
3000	ok	0.18	0.1	2.80e-03	6.2	6.2	6.2	6.2	6.5	0.8	2.1	-1.1	-3.8	-1.8
3001	ok	0.18	0.1	2.93e-03	6.2	6.2	6.2	6.2	7.7	5.4	1.6	-2.0	-3.8	-1.4
3002	ok	0.18	0.1	3.39e-03	6.2	6.2	6.2	6.2	0.6	-2.8	-1.8	0.6	4.3	-0.3
3003	ok	0.18	0.1	3.44e-03	6.2	6.2	6.2	6.2	6.5	6.2	4.3	-2.2	-3.5	6.32e-02
3004	ok	0.18	0.1	3.61e-03	6.2	6.2	6.2	6.2	4.9	3.4	6.2	-2.1	-3.3	0.9
3005	ok	0.18	0.2	4.17e-03	6.2	6.2	6.2	6.2	4.9	10.2	9.0	-2.3	-4.7	1.4
3006	ok	0.18	0.2	4.82e-03	6.2	6.2	6.2	6.2	2.6	6.4	7.8	-2.2	-5.3	2.1
3007	ok	0.18	0.3	8.34e-03	6.2	6.2	6.2	6.2	2.5	18.1	9.0	-2.1	-7.3	2.0
3008	ok	0.18	0.2	7.13e-03	6.2	6.2	6.2	6.2	-0.3	10.0	0.8	-0.8	-7.3	0.7
3009	ok	0.18	0.2	8.67e-03	6.2	6.2	6.2	6.2	-0.3	-17.0	0.6	1.7	7.9	-0.1
3010	ok	0.18	0.3	8.79e-03	6.2	6.2	6.2	6.2	-3.2	-10.6	11.9	3.2	10.1	-1.7
3011	ok	0.18	0.2	4.31e-03	6.2	6.2	6.2	6.2	-2.1	-0.5	6.7	1.0	6.6	4.34e-02
3012	ok	0.18	0.2	7.44e-03	6.2	6.2	6.2	6.2	-5.0	-17.6	11.1	3.6	9.4	-1.3
3013	ok	0.18	0.2	3.69e-03	6.2	6.2	6.2	6.2	-2.4	3.4	3.4	-0.3	6.8	-0.7
3014	ok	0.18	0.3	6.72e-03	6.2	6.2	6.2	6.2	-4.4	-14.8	10.9	3.8	9.6	-1.2
3015	ok	0.18	0.2	3.34e-03	6.2	6.2	6.2	6.2	-2.1	4.0	2.5	-0.3	7.1	-0.4

3016	ok	0.18	0.3	6.05e-03	6.2	6.2	6.2	6.2	-4.5	-13.3	9.5	3.5	9.4	-1.1
3017	ok	0.18	0.2	2.82e-03	6.2	6.2	6.2	6.2	-5.0	3.8	4.3	0.6	6.7	0.3
3018	ok	0.18	0.2	5.00e-03	6.2	6.2	6.2	6.2	-2.2	-11.7	7.4	2.8	8.5	-1.0
3019	ok	0.18	0.2	2.12e-03	6.2	6.2	6.2	6.2	-1.0	5.4	3.5	0.7	5.9	0.6
3020	ok	0.18	0.3	3.43e-03	6.2	6.2	6.2	6.2	-0.9	2.4	6.6	3.4	8.7	-1.2
3021	ok	0.18	0.2	2.57e-03	6.2	6.2	6.2	6.2	-1.6	1.4	1.8	1.1	5.8	-0.4
3022	ok	0.18	0.2	5.32e-03	6.2	6.2	6.2	6.2	-2.7	-12.3	5.5	3.1	8.1	-1.4
3023	ok	0.18	0.2	2.49e-03	6.2	6.2	6.2	6.2	-1.6	7.3	-4.12e-02	-9.20e-02	6.4	-0.5
3024	ok	0.18	0.3	6.12e-03	6.2	6.2	6.2	6.2	-2.6	-14.4	4.9	3.6	8.9	-1.4
3025	ok	0.18	0.2	2.28e-03	6.2	6.2	6.2	6.2	-3.5	8.3	-0.7	-1.3	6.3	-0.8
3026	ok	0.18	0.3	6.31e-03	6.2	6.2	6.2	6.2	-2.3	-14.9	-9.0	3.2	9.3	-1.9
3027	ok	0.18	0.2	2.40e-03	6.2	6.2	6.2	6.2	-3.5	8.2	1.0	-1.3	6.2	1.0
3028	ok	0.18	0.3	5.89e-03	6.2	6.2	6.2	6.2	-2.6	-14.6	-8.7	2.9	9.1	-1.7
3029	ok	0.18	0.2	2.30e-03	6.2	6.2	6.2	6.2	-5.0	2.5	0.2	0.5	6.5	0.3
3030	ok	0.18	0.2	5.19e-03	6.2	6.2	6.2	6.2	-2.9	-12.7	-7.7	2.3	8.2	-1.5
3031	ok	0.18	0.2	1.83e-03	6.2	6.2	6.2	6.2	-2.8	4.2	-1.6	0.7	5.7	0.6
3032	ok	0.18	0.3	3.85e-03	6.2	6.2	6.2	6.2	-2.4	-1.1	1.6	3.1	8.3	-1.2
3033	ok	0.18	0.2	1.87e-03	6.2	6.2	6.2	6.2	-2.1	4.7	1.2	0.6	5.8	-0.7
3034	ok	0.18	0.2	5.16e-03	6.2	6.2	6.2	6.2	-2.2	-12.3	7.5	2.3	8.4	1.5
3035	ok	0.18	0.2	1.64e-03	6.2	6.2	6.2	6.2	-2.1	8.4	0.9	3.82e-03	6.5	-0.5
3036	ok	0.18	0.3	5.88e-03	6.2	6.2	6.2	6.2	-1.6	-14.1	8.7	3.0	9.3	1.7
3037	ok	0.18	0.2	1.66e-03	6.2	6.2	6.2	6.2	-2.2	9.2	-1.0	-1.3	6.4	-0.9
3038	ok	0.18	0.3	6.13e-03	6.2	6.2	6.2	6.2	-1.6	-14.6	-5.3	3.9	9.7	1.3
3039	ok	0.18	0.2	1.71e-03	6.2	6.2	6.2	6.2	-2.0	9.3	0.7	-1.3	6.4	0.9
3040	ok	0.18	0.3	5.89e-03	6.2	6.2	6.2	6.2	-1.7	-13.5	-4.9	3.7	9.0	1.5
3041	ok	0.18	0.2	2.03e-03	6.2	6.2	6.2	6.2	-2.0	3.7	1.4	-0.2	6.3	0.9
3042	ok	0.18	0.2	5.10e-03	6.2	6.2	6.2	6.2	-2.0	-11.4	-5.4	3.1	8.1	1.5
3043	ok	0.18	0.2	2.29e-03	6.2	6.2	6.2	6.2	-0.9	1.9	-1.5	1.1	5.7	0.4
3044	ok	0.18	0.3	3.39e-03	6.2	6.2	6.2	6.2	-0.4	2.5	-6.4	3.4	8.6	1.2
3045	ok	0.18	0.2	1.86e-03	6.2	6.2	6.2	6.2	-0.4	5.0	-3.4	0.7	5.9	-0.6
3046	ok	0.18	0.2	5.08e-03	6.2	6.2	6.2	6.2	-1.8	-12.3	-7.3	2.8	8.5	1.0
3047	ok	0.18	0.2	2.74e-03	6.2	6.2	6.2	6.2	-4.4	3.2	-4.5	0.6	6.7	-0.3
3048	ok	0.18	0.3	6.12e-03	6.2	6.2	6.2	6.2	-1.5	-13.9	-9.8	3.5	9.3	1.1
3049	ok	0.18	0.2	3.41e-03	6.2	6.2	6.2	6.2	-5.0	3.7	-5.6	0.3	7.2	-0.1
3050	ok	0.18	0.2	6.83e-03	6.2	6.2	6.2	6.2	-4.3	-15.2	-11.2	3.8	9.6	1.2
3051	ok	0.18	0.2	3.82e-03	6.2	6.2	6.2	6.2	-2.4	3.1	-3.7	-0.3	6.8	0.7
3052	ok	0.18	0.2	7.65e-03	6.2	6.2	6.2	6.2	-5.0	-18.0	-11.5	3.6	9.5	1.3
3053	ok	0.18	0.2	4.46e-03	6.2	6.2	6.2	6.2	0.3	4.4	13.6	-2.6	-4.3	1.3
3054	ok	0.18	0.3	9.07e-03	6.2	6.2	6.2	6.2	-3.3	-11.1	-12.2	3.3	10.1	1.8
3055	ok	0.18	0.2	8.93e-03	6.2	6.2	6.2	6.2	-0.3	-17.5	-0.6	1.6	7.9	0.1
3056	ok	0.18	0.2	8.63e-03	6.2	6.2	6.2	6.2	3.24e-02	-17.1	0.9	1.5	7.8	-7.32e-02
3057	ok	0.18	0.3	8.70e-03	6.2	6.2	6.2	6.2	-5.8	-9.8	11.6	3.8	10.2	-1.6
3058	ok	0.18	0.2	4.55e-03	6.2	6.2	6.2	6.2	-2.5	-1.0	6.6	1.2	6.8	-0.2
3059	ok	0.18	0.3	8.55e-03	6.2	6.2	6.2	6.2	-7.4	-18.8	12.7	4.5	10.6	-1.5
3060	ok	0.18	0.2	3.11e-03	6.2	6.2	6.2	6.2	-3.7	7.3	4.6	0.6	6.7	0.3
3061	ok	0.18	0.3	7.83e-03	6.2	6.2	6.2	6.2	-6.9	-16.5	12.9	4.7	11.1	-1.4
3062	ok	0.18	0.2	2.62e-03	6.2	6.2	6.2	6.2	-4.77e-02	4.5	3.0	-1.6	5.1	0.4
3063	ok	0.18	0.3	7.02e-03	6.2	6.2	6.2	6.2	-6.7	-15.0	11.3	4.3	10.7	-1.3
3064	ok	0.18	0.2	2.32e-03	6.2	6.2	6.2	6.2	-3.9	10.3	2.8	0.4	6.2	0.4
3065	ok	0.18	0.3	5.71e-03	6.2	6.2	6.2	6.2	-6.4	-12.8	8.4	3.6	9.5	-1.2
3066	ok	0.18	0.2	2.04e-03	6.2	6.2	6.2	6.2	-3.8	6.3	2.7	1.0	5.7	0.5
3067	ok	0.18	0.3	3.13e-03	6.2	6.2	6.2	6.2	-5.2	3.6	7.1	3.8	8.9	-1.3
3068	ok	0.18	0.2	2.20e-03	6.2	6.2	6.2	6.2	-4.5	1.7	2.1	1.4	5.8	-5.72e-02
3069	ok	0.18	0.2	5.82e-03	6.2	6.2	6.2	6.2	-6.7	-13.0	6.9	3.9	9.1	-1.6
3070	ok	0.18	0.2	2.99e-03	6.2	6.2	6.2	6.2	-4.2	6.0	-0.2	0.7	6.0	9.30e-02
3071	ok	0.18	0.3	7.41e-03	6.2	6.2	6.2	6.2	-7.0	-15.9	7.1	4.6	10.4	-1.7
3072	ok	0.18	0.2	4.24e-03	6.2	6.2	6.2	6.2	-0.8	4.2	-4.0	-1.6	6.0	-0.5
3073	ok	0.18	0.3	8.50e-03	6.2	6.2	6.2	6.2	-7.0	-17.0	7.5	4.8	11.1	-1.5
3074	ok	0.18	0.2	4.40e-03	6.2	6.2	6.2	6.2	-0.8	4.1	4.2	-1.6	5.9	0.6
3075	ok	0.18	0.3	7.22e-03	6.2	6.2	6.2	6.2	-6.8	-16.8	6.2	4.2	10.6	-1.2
3076	ok	0.18	0.2	4.18e-03	6.2	6.2	6.2	6.2	-4.1	9.0	-2.6	0.4	5.9	0.4
3077	ok	0.18	0.2	5.57e-03	6.2	6.2	6.2	6.2	-4.8	-13.0	-3.2	3.6	8.5	1.6
3078	ok	0.18	0.2	3.99e-03	6.2	6.2	6.2	6.2	-3.3	5.1	-2.4	1.1	5.5	0.5
3079	ok	0.18	0.3	3.19e-03	6.2	6.2	6.2	6.2	-4.2	-0.3	2.2	3.5	8.5	-1.3
3080	ok	0.18	0.2	4.27e-03	6.2	6.2	6.2	6.2	-3.4	1.4	-2.4	1.5	5.6	-7.73e-02
3081	ok	0.18	0.3	5.58e-03	6.2	6.2	6.2	6.2	-5.0	-12.6	3.1	3.7	8.7	-1.6
3082	ok	0.18	0.2	4.22e-03	6.2	6.2	6.2	6.2	1.8	7.5	2.2	-0.8	6.1	-0.4
3083	ok	0.18	0.3	7.07e-03	6.2	6.2	6.2	6.2	-5.6	-16.4	-6.5	4.4	10.9	1.3
3084	ok	0.18	0.2	4.10e-03	6.2	6.2	6.2	6.2	0.4	5.0	-4.3	-1.6	6.1	-0.6
3085	ok	0.18	0.3	8.21e-03	6.2	6.2	6.2	6.2	-5.6	-16.4	-7.6	4.9	11.3	1.5
3086	ok	0.18	0.2	3.78e-03	6.2	6.2	6.2	6.2	0.7	5.1	4.1	-1.6	6.1	0.6
3087	ok	0.18	0.3	6.97e-03	6.2	6.2	6.2	6.2	-5.7	-15.0	-7.1	4.7	10.5	1.7
3088	ok	0.18	0.2	2.56e-03	6.2	6.2	6.2	6.2	-3.0	7.1	0.2	0.8	6.0	-7.66e-02
3089	ok	0.18	0.2	5.59e-03	6.2	6.2	6.2	6.2	-3.3	-12.1	-6.8	3.9	9.1	1.7
3090	ok	0.18	0.2	1.82e-03	6.2	6.2	6.2	6.2	-3.4	2.1	-1.8	1.4	5.8	7.80e-02
3091	ok	0.18	0.3	2.97e-03	6.2	6.2	6.2	6.2	-4.4	3.7	-6.8	3.9	8.9	1.4
3092	ok	0.18	0.2	1.69e-03	6.2	6.2	6.2	6.2	-3.0	6.0	-2.5	1.0	5.7	-0.5
3093	ok	0.18	0.2	5.76e-03	6.2	6.2	6.2	6.2	-5.8	-13.4	-8.4	3.6	9.4	1.2

3094	ok	0.18	0.2	2.17e-03	6.2	6.2	6.2	6.2	2.0	7.7	-3.0	-0.7	6.0	-0.4
3095	ok	0.18	0.3	7.21e-03	6.2	6.2	6.2	6.2	-6.4	-15.6	-11.6	4.4	10.7	1.3
3096	ok	0.18	0.2	2.61e-03	6.2	6.2	6.2	6.2	1.2	9.8	-4.7	-1.2	6.1	-0.3
3097	ok	0.18	0.3	8.02e-03	6.2	6.2	6.2	6.2	-6.8	-16.9	-13.3	4.8	11.1	1.4
3098	ok	0.18	0.2	3.20e-03	6.2	6.2	6.2	6.2	-3.6	7.0	-4.9	0.6	6.7	-0.3
3099	ok	0.18	0.3	8.76e-03	6.2	6.2	6.2	6.2	-7.4	-19.2	-13.1	4.5	10.6	1.5
3100	ok	0.18	0.2	4.70e-03	6.2	6.2	6.2	6.2	-2.6	-1.3	-6.8	1.2	6.8	0.2
3101	ok	0.18	0.3	8.96e-03	6.2	6.2	6.2	6.2	-5.9	-10.3	-11.9	3.9	10.3	1.6
3102	ok	0.18	0.2	8.90e-03	6.2	6.2	6.2	6.2	2.15e-02	-17.7	-0.9	1.5	7.9	8.38e-02
3103	ok	0.18	0.1	7.75e-03	6.2	6.2	6.2	6.2	-1.5	-13.0	-1.9	-0.3	3.6	-0.1
3104	ok	0.18	0.1	4.59e-03	6.2	6.2	6.2	6.2	-4.3	-1.5	3.8	2.2	3.9	-0.7
3105	ok	0.18	0.1	3.53e-03	6.2	6.2	6.2	6.2	-2.7	-3.6	4.6	1.6	4.1	-0.5
3106	ok	0.18	0.1	3.01e-03	6.2	6.2	6.2	6.2	-5.7	10.7	2.8	1.7	3.3	-0.6
3107	ok	0.18	0.1	2.34e-03	6.2	6.2	6.2	6.2	-2.5	3.2	4.4	1.6	4.1	-0.5
3108	ok	0.18	0.1	3.23e-03	6.2	6.2	6.2	6.2	-7.9	9.1	-7.1	1.9	1.2	-0.5
3109	ok	0.18	0.1	2.07e-03	6.2	6.2	6.2	6.2	-4.9	7.5	-4.3	2.0	1.4	-0.8
3110	ok	0.18	0.1	2.68e-03	6.2	6.2	6.2	6.2	-3.0	15.4	1.2	1.6	2.9	-0.7
3111	ok	0.18	0.1	2.87e-03	6.2	6.2	6.2	6.2	0.4	2.9	2.9	1.8	4.0	-0.6
3112	ok	0.18	0.1	3.54e-03	6.2	6.2	6.2	6.2	-2.7	11.5	1.0	1.8	3.4	-0.6
3113	ok	0.18	0.1	3.70e-03	6.2	6.2	6.2	6.2	-0.6	2.1	2.2	1.6	3.8	-0.5
3114	ok	0.18	0.1	4.04e-03	6.2	6.2	6.2	6.2	-2.4	8.8	-0.7	1.6	3.1	-0.5
3115	ok	0.18	0.1	4.15e-03	6.2	6.2	6.2	6.2	-3.6	0.9	-0.2	1.6	3.7	0.4
3116	ok	0.18	0.1	4.68e-03	6.2	6.2	6.2	6.2	-5.8	9.6	0.9	1.4	3.0	0.6
3117	ok	0.18	0.1	4.41e-03	6.2	6.2	6.2	6.2	-1.3	3.3	-1.1	1.5	3.5	-0.5
3118	ok	0.18	0.1	5.30e-03	6.2	6.2	6.2	6.2	-0.4	8.1	-17.2	1.9	1.3	-0.5
3119	ok	0.18	0.1	4.81e-03	6.2	6.2	6.2	6.2	2.3	6.0	-15.1	2.2	1.6	-0.8
3120	ok	0.18	0.1	5.91e-03	6.2	6.2	6.2	6.2	-7.5	8.8	-17.7	1.8	1.3	-0.5
3121	ok	0.18	0.1	5.39e-03	6.2	6.2	6.2	6.2	-4.7	6.1	-14.9	2.2	1.5	-0.8
3122	ok	0.18	0.1	6.32e-03	6.2	6.2	6.2	6.2	-7.6	5.6	18.5	1.8	1.2	0.5
3123	ok	0.18	0.1	5.85e-03	6.2	6.2	6.2	6.2	-4.0	2.6	4.4	1.4	3.4	0.4
3124	ok	0.18	0.1	6.47e-03	6.2	6.2	6.2	6.2	-6.3	9.8	-5.1	1.6	3.2	-0.6
3125	ok	0.18	0.1	5.72e-03	6.2	6.2	6.2	6.2	-4.3	1.1	-4.0	1.6	3.7	-0.5
3126	ok	0.18	0.1	6.35e-03	6.2	6.2	6.2	6.2	-5.0	7.2	5.4	1.5	3.0	0.5
3127	ok	0.18	0.1	5.99e-03	6.2	6.2	6.2	6.2	-3.8	1.4	2.8	1.6	3.7	0.5
3128	ok	0.18	0.1	6.65e-03	6.2	6.2	6.2	6.2	-5.9	10.6	4.1	1.6	3.2	0.6
3129	ok	0.18	0.1	5.91e-03	6.2	6.2	6.2	6.2	-4.0	3.4	-4.6	1.5	3.5	-0.4
3130	ok	0.18	0.1	6.37e-03	6.2	6.2	6.2	6.2	-7.8	6.3	-18.7	1.7	1.2	-0.5
3131	ok	0.18	0.1	5.34e-03	6.2	6.2	6.2	6.2	2.0	6.7	14.9	2.2	1.6	0.9
3132	ok	0.18	0.1	5.87e-03	6.2	6.2	6.2	6.2	-1.1	10.6	17.4	1.8	1.2	0.5
3133	ok	0.18	0.1	4.72e-03	6.2	6.2	6.2	6.2	2.6	6.4	15.4	2.2	1.6	0.8
3134	ok	0.18	0.1	5.25e-03	6.2	6.2	6.2	6.2	-9.57e-02	8.4	17.5	1.9	1.3	0.5
3135	ok	0.18	0.1	4.34e-03	6.2	6.2	6.2	6.2	-0.8	3.8	1.4	1.5	3.6	0.5
3136	ok	0.18	0.1	4.62e-03	6.2	6.2	6.2	6.2	-3.1	11.3	3.0	1.6	2.9	0.6
3137	ok	0.18	0.1	4.10e-03	6.2	6.2	6.2	6.2	-3.4	1.2	0.6	1.6	3.6	-0.4
3138	ok	0.18	0.1	3.98e-03	6.2	6.2	6.2	6.2	-2.1	8.8	1.1	1.7	3.2	0.5
3139	ok	0.18	0.1	3.69e-03	6.2	6.2	6.2	6.2	-0.2	1.9	-1.8	1.6	3.8	0.5
3140	ok	0.18	0.1	3.51e-03	6.2	6.2	6.2	6.2	-2.4	11.2	-0.7	1.8	3.4	0.6
3141	ok	0.18	0.1	2.91e-03	6.2	6.2	6.2	6.2	0.7	2.5	-2.9	1.8	4.0	0.6
3142	ok	0.18	0.1	2.62e-03	6.2	6.2	6.2	6.2	-2.9	15.0	-1.3	1.7	2.9	0.7
3143	ok	0.18	0.1	2.01e-03	6.2	6.2	6.2	6.2	-4.6	7.1	4.3	2.0	1.4	0.8
3144	ok	0.18	0.1	3.18e-03	6.2	6.2	6.2	6.2	-7.6	10.0	6.3	1.9	1.1	0.5
3145	ok	0.18	0.1	2.39e-03	6.2	6.2	6.2	6.2	-2.4	2.9	-4.6	1.6	4.1	0.5
3146	ok	0.18	0.1	2.99e-03	6.2	6.2	6.2	6.2	-5.7	10.3	-3.0	1.7	3.3	0.6
3147	ok	0.18	0.1	3.67e-03	6.2	6.2	6.2	6.2	-2.7	-3.9	-4.8	1.6	4.1	0.5
3148	ok	0.18	0.1	4.80e-03	6.2	6.2	6.2	6.2	-4.4	-2.0	-3.9	2.2	3.9	0.7
3149	ok	0.18	0.1	8.04e-03	6.2	6.2	6.2	6.2	-1.5	-13.6	1.9	-0.3	3.6	0.1
3150	ok	0.18	6.56e-02	6.85e-03	6.2	6.2	6.2	6.2	-0.8	-8.5	-1.1	-4.24e-03	-0.5	-0.6
3151	ok	0.18	6.17e-02	4.57e-03	6.2	6.2	6.2	6.2	-3.0	-11.4	-3.3	1.9	0.3	-0.4
3152	ok	0.18	6.88e-02	2.00e-03	6.2	6.2	6.2	6.2	0.3	-4.3	-2.5	1.2	0.3	-0.6
3153	ok	0.18	6.09e-02	2.76e-03	6.2	6.2	6.2	6.2	0.5	0.3	-9.4	1.3	0.3	-0.5
3154	ok	0.18	5.50e-02	1.86e-03	6.2	6.2	6.2	6.2	-3.6	5.9	3.1	-1.3	-0.3	0.6
3155	ok	0.18	6.82e-02	2.99e-03	6.2	6.2	6.2	6.2	-0.2	5.2	-12.0	1.2	0.3	-0.5
3156	ok	0.18	6.17e-02	3.32e-03	6.2	6.2	6.2	6.2	1.3	7.1	-9.3	-1.1	-0.3	-0.7
3157	ok	0.18	7.23e-02	4.07e-03	6.2	6.2	6.2	6.2	8.45e-02	5.6	-13.1	1.2	0.3	-0.6
3158	ok	0.18	6.45e-02	4.62e-03	6.2	6.2	6.2	6.2	2.1	6.7	-10.5	-1.1	-0.3	-0.7
3159	ok	0.18	7.60e-02	5.19e-03	6.2	6.2	6.2	6.2	1.1	4.5	-14.3	1.3	0.3	-0.6
3160	ok	0.18	6.69e-02	5.55e-03	6.2	6.2	6.2	6.2	2.9	5.3	-12.3	-1.2	-0.3	-0.8
3161	ok	0.18	8.15e-02	6.00e-03	6.2	6.2	6.2	6.2	1.3	3.3	-16.6	1.3	0.3	-0.6
3162	ok	0.18	7.45e-02	6.06e-03	6.2	6.2	6.2	6.2	-8.2	2.1	14.1	-1.3	-0.4	0.7
3163	ok	0.18	8.46e-02	6.62e-03	6.2	6.2	6.2	6.2	0.5	3.5	-19.0	1.2	0.3	-0.6
3164	ok	0.18	7.86e-02	6.43e-03	6.2	6.2	6.2	6.2	-8.1	3.5	15.9	-1.2	-0.3	0.7
3165	ok	0.18	8.56e-02	7.22e-03	6.2	6.2	6.2	6.2	-1.9	4.3	-20.8	1.2	0.3	-0.6
3166	ok	0.18	8.09e-02	6.78e-03	6.2	6.2	6.2	6.2	-8.0	4.6	17.9	-1.2	-0.3	0.7
3167	ok	0.18	8.51e-02	7.66e-03	6.2	6.2	6.2	6.2	-3.3	4.5	-21.4	1.2	0.3	-0.6
3168	ok	0.18	7.97e-02	7.04e-03	6.2	6.2	6.2	6.2	-1.6	5.6	-18.8	-1.2	-0.3	-0.8
3169	ok	0.18	8.32e-02	7.86e-03	6.2	6.2	6.2	6.2	-4.3	3.8	-21.3	1.2	0.3	-0.6
3170	ok	0.18	7.68e-02	7.09e-03	6.2	6.2	6.2	6.2	-2.6	4.5	-19.0	-1.2	-0.3	-0.8
3171	ok	0.18	8.24e-02	7.69e-03	6.2	6.2	6.2	6.2	-4.4	2.6	-21.2	1.2	0.3	-0.6

3172	ok	0.18	7.57e-02	6.93e-03	6.2	6.2	6.2	6.2	-3.1	3.3	-19.5	-1.3	-0.4	-0.8
3173	ok	0.18	8.19e-02	7.63e-03	6.2	6.2	6.2	6.2	-6.5	1.6	-22.0	1.2	0.3	-0.6
3174	ok	0.18	7.62e-02	7.18e-03	6.2	6.2	6.2	6.2	-2.6	3.5	18.9	-1.3	-0.4	0.8
3175	ok	0.18	8.20e-02	7.89e-03	6.2	6.2	6.2	6.2	-7.5	2.1	-22.5	1.1	0.2	-0.6
3176	ok	0.18	7.73e-02	7.21e-03	6.2	6.2	6.2	6.2	-2.0	5.1	18.6	-1.2	-0.3	0.8
3177	ok	0.18	8.43e-02	7.95e-03	6.2	6.2	6.2	6.2	-9.0	3.3	-22.2	1.1	0.3	-0.6
3178	ok	0.18	8.12e-02	7.07e-03	6.2	6.2	6.2	6.2	-0.9	6.2	18.7	-1.2	-0.3	0.8
3179	ok	0.18	8.71e-02	7.67e-03	6.2	6.2	6.2	6.2	-10.1	3.7	-20.7	1.0	0.2	-0.5
3180	ok	0.18	8.31e-02	6.74e-03	6.2	6.2	6.2	6.2	-8.0	4.9	-17.9	-1.2	-0.3	-0.7
3181	ok	0.18	8.82e-02	7.18e-03	6.2	6.2	6.2	6.2	-1.0	4.6	18.7	1.1	0.2	0.5
3182	ok	0.18	8.21e-02	6.36e-03	6.2	6.2	6.2	6.2	-8.9	3.8	-15.8	-1.2	-0.3	-0.7
3183	ok	0.18	8.76e-02	6.56e-03	6.2	6.2	6.2	6.2	-10.0	1.8	-15.7	1.0	0.2	-0.6
3184	ok	0.18	7.73e-02	5.99e-03	6.2	6.2	6.2	6.2	-8.1	2.2	-14.0	-1.3	-0.4	-0.7
3185	ok	0.18	8.45e-02	5.94e-03	6.2	6.2	6.2	6.2	1.1	3.2	14.3	1.3	0.3	0.5
3186	ok	0.18	6.92e-02	5.51e-03	6.2	6.2	6.2	6.2	3.4	5.2	12.9	-1.2	-0.3	0.8
3187	ok	0.18	7.83e-02	5.15e-03	6.2	6.2	6.2	6.2	1.8	7.0	10.9	1.2	0.1	0.5
3188	ok	0.18	6.61e-02	4.62e-03	6.2	6.2	6.2	6.2	2.6	6.4	10.9	-1.1	-0.3	0.8
3189	ok	0.18	7.39e-02	4.06e-03	6.2	6.2	6.2	6.2	1.6	6.1	7.1	-0.9	-0.2	0.6
3190	ok	0.18	6.26e-02	3.35e-03	6.2	6.2	6.2	6.2	1.6	6.8	9.5	-1.1	-0.3	0.8
3191	ok	0.18	6.91e-02	3.03e-03	6.2	6.2	6.2	6.2	-2.25e-02	5.0	12.1	1.2	0.3	0.5
3192	ok	0.18	5.54e-02	1.85e-03	6.2	6.2	6.2	6.2	-3.6	5.8	-3.3	-1.3	-0.3	-0.6
3193	ok	0.18	6.17e-02	2.80e-03	6.2	6.2	6.2	6.2	0.5	-0.2	5.6	1.3	0.3	0.4
3194	ok	0.18	6.85e-02	2.06e-03	6.2	6.2	6.2	6.2	-1.9	11.1	3.9	-1.7	-0.3	-0.4
3195	ok	0.18	6.10e-02	4.73e-03	6.2	6.2	6.2	6.2	-3.0	-11.9	3.2	2.0	0.3	0.4
3196	ok	0.18	6.57e-02	7.08e-03	6.2	6.2	6.2	6.2	-0.8	-8.9	1.1	-5.32e-03	-0.5	0.6
3197	ok	0.18	4.89e-02	5.32e-03	6.2	6.2	6.2	6.2	-0.6	-15.8	-1.5	-3.01e-02	-0.2	-0.2
3198	ok	0.18	4.61e-02	3.96e-03	6.2	6.2	6.2	6.2	0.4	-6.5	-3.9	1.4	0.2	-0.4
3199	ok	0.18	4.81e-02	2.29e-03	6.2	6.2	6.2	6.2	0.6	-3.7	-3.1	-0.7	-0.3	-0.6
3200	ok	0.18	5.51e-02	3.67e-03	6.2	6.2	6.2	6.2	3.65e-02	-0.3	-10.6	1.0	0.1	-0.5
3201	ok	0.18	4.72e-02	3.57e-03	6.2	6.2	6.2	6.2	-5.1	2.0	3.5	-1.0	-0.3	0.6
3202	ok	0.18	6.50e-02	4.16e-03	6.2	6.2	6.2	6.2	0.7	2.7	-13.3	0.9	0.1	-0.6
3203	ok	0.18	5.52e-02	5.53e-03	6.2	6.2	6.2	6.2	2.9	5.5	-8.8	-0.9	-0.3	-0.7
3204	ok	0.18	6.96e-02	6.05e-03	6.2	6.2	6.2	6.2	1.4	3.0	-14.5	0.9	0.1	-0.6
3205	ok	0.18	5.98e-02	6.78e-03	6.2	6.2	6.2	6.2	3.7	5.5	-10.3	-0.9	-0.3	-0.7
3206	ok	0.18	7.21e-02	7.16e-03	6.2	6.2	6.2	6.2	1.8	2.5	-15.5	1.0	0.1	-0.6
3207	ok	0.18	6.25e-02	7.61e-03	6.2	6.2	6.2	6.2	-13.2	-0.8	12.8	-1.0	-0.3	0.7
3208	ok	0.18	7.61e-02	7.90e-03	6.2	6.2	6.2	6.2	2.0	1.3	-18.0	1.0	0.2	-0.6
3209	ok	0.18	6.66e-02	8.14e-03	6.2	6.2	6.2	6.2	-14.4	-0.1	14.4	-1.0	-0.4	0.7
3210	ok	0.18	7.79e-02	8.51e-03	6.2	6.2	6.2	6.2	0.5	1.7	-19.0	0.9	0.1	-0.6
3211	ok	0.18	6.90e-02	8.48e-03	6.2	6.2	6.2	6.2	-14.7	0.9	16.1	-1.0	-0.4	0.7
3212	ok	0.18	7.84e-02	8.96e-03	6.2	6.2	6.2	6.2	-1.4	2.0	-20.7	0.9	0.1	-0.6
3213	ok	0.18	6.98e-02	8.68e-03	6.2	6.2	6.2	6.2	-13.0	1.6	17.9	-1.0	-0.3	0.7
3214	ok	0.18	7.80e-02	9.24e-03	6.2	6.2	6.2	6.2	-3.5	2.0	-21.6	0.9	0.1	-0.6
3215	ok	0.18	6.95e-02	8.70e-03	6.2	6.2	6.2	6.2	-2.6	3.6	-18.7	-1.0	-0.3	-0.7
3216	ok	0.18	7.58e-02	9.24e-03	6.2	6.2	6.2	6.2	-5.3	1.6	-21.9	0.9	0.1	-0.6
3217	ok	0.18	6.81e-02	8.47e-03	6.2	6.2	6.2	6.2	-4.4	2.9	-19.1	-1.0	-0.4	-0.7
3218	ok	0.18	7.40e-02	8.90e-03	6.2	6.2	6.2	6.2	-6.6	0.8	-22.0	0.9	0.1	-0.6
3219	ok	0.18	6.69e-02	8.10e-03	6.2	6.2	6.2	6.2	-6.0	1.9	-19.6	-1.0	-0.3	-0.7
3220	ok	0.18	7.18e-02	8.67e-03	6.2	6.2	6.2	6.2	-9.7	-0.2	-22.8	0.9	0.1	-0.6
3221	ok	0.18	6.63e-02	8.32e-03	6.2	6.2	6.2	6.2	-5.9	2.0	19.0	-1.0	-0.3	0.7
3222	ok	0.18	7.39e-02	9.09e-03	6.2	6.2	6.2	6.2	-10.6	0.5	-22.6	0.9	0.1	-0.6
3223	ok	0.18	6.81e-02	8.63e-03	6.2	6.2	6.2	6.2	-4.2	3.2	18.7	-1.0	-0.4	0.7
3224	ok	0.18	7.64e-02	9.35e-03	6.2	6.2	6.2	6.2	-13.7	0.6	-22.8	0.8	0.1	-0.6
3225	ok	0.18	7.03e-02	8.76e-03	6.2	6.2	6.2	6.2	-2.4	4.0	18.6	-1.0	-0.3	0.7
3226	ok	0.18	7.92e-02	9.28e-03	6.2	6.2	6.2	6.2	-15.3	0.8	-21.5	0.8	0.1	-0.6
3227	ok	0.18	7.13e-02	8.68e-03	6.2	6.2	6.2	6.2	-13.2	1.8	-17.9	-1.0	-0.3	-0.7
3228	ok	0.18	8.02e-02	8.93e-03	6.2	6.2	6.2	6.2	-16.2	0.8	-19.6	0.8	0.1	-0.6
3229	ok	0.18	7.09e-02	8.42e-03	6.2	6.2	6.2	6.2	-14.7	1.0	-16.0	-1.0	-0.4	-0.7
3230	ok	0.18	8.02e-02	8.46e-03	6.2	6.2	6.2	6.2	-16.2	8.31e-02	-17.7	0.8	0.1	-0.6
3231	ok	0.18	6.89e-02	8.08e-03	6.2	6.2	6.2	6.2	-14.3	-4.56e-02	-14.3	-1.0	-0.4	-0.7
3232	ok	0.18	7.86e-02	7.84e-03	6.2	6.2	6.2	6.2	-14.8	-1.0	-16.2	0.8	0.1	-0.5
3233	ok	0.18	6.46e-02	7.55e-03	6.2	6.2	6.2	6.2	4.2	4.5	12.8	-0.9	-0.3	0.7
3234	ok	0.18	7.43e-02	7.12e-03	6.2	6.2	6.2	6.2	-13.4	-0.9	-14.8	0.7	0.1	-0.5
3235	ok	0.18	6.14e-02	6.76e-03	6.2	6.2	6.2	6.2	4.0	5.4	10.8	-0.9	-0.3	0.7
3236	ok	0.18	7.12e-02	6.02e-03	6.2	6.2	6.2	6.2	-11.2	-0.2	-12.8	0.7	0.1	-0.5
3237	ok	0.18	5.69e-02	5.53e-03	6.2	6.2	6.2	6.2	3.2	5.3	9.1	-0.9	-0.3	0.7
3238	ok	0.18	6.61e-02	4.16e-03	6.2	6.2	6.2	6.2	1.0	2.8	11.1	1.0	0.2	0.6
3239	ok	0.18	4.79e-02	3.59e-03	6.2	6.2	6.2	6.2	-5.1	1.9	-3.5	-1.0	-0.3	-0.6
3240	ok	0.18	5.60e-02	3.71e-03	6.2	6.2	6.2	6.2	-4.0	4.7	-2.2	-0.4	-0.1	-0.5
3241	ok	0.18	4.79e-02	2.35e-03	6.2	6.2	6.2	6.2	-2.1	6.9	2.3	-1.2	-0.3	-0.4
3242	ok	0.18	4.66e-02	4.06e-03	6.2	6.2	6.2	6.2	0.4	-6.8	3.8	1.4	0.2	0.4
3243	ok	0.18	4.89e-02	5.48e-03	6.2	6.2	6.2	6.2	-0.7	-16.3	1.5	-2.98e-02	-0.2	0.2
3244	ok	0.18	3.47e-02	3.56e-03	6.2	6.2	6.2	6.2	-1.2	5.4	3.2	7.12e-02	0.1	0.2
3245	ok	0.18	3.55e-02	2.88e-03	6.2	6.2	6.2	6.2	0.7	-7.4	-2.8	0.7	4.31e-02	-0.4
3246	ok	0.18	2.70e-02	2.17e-03	6.2	6.2	6.2	6.2	2.2	-0.2	-7.5	-0.4	-0.2	-0.6
3247	ok	0.18	5.10e-02	4.06e-03	6.2	6.2	6.2	6.2	2.6	-0.3	-11.6	0.5	-6.61e-02	-0.6
3248	ok	0.18	4.45e-02	5.22e-03	6.2	6.2	6.2	6.2	3.6	1.5	-11.5	-0.4	-0.3	-0.7
3249	ok	0.18	6.01e-02	6.47e-03	6.2	6.2	6.2	6.2	4.1	1.4	-13.0	0.5	1.78e-02	-0.6

3250	ok	0.18	5.30e-02	7.15e-03	6.2	6.2	6.2	6.2	4.7	1.9	-12.7	-0.4	-0.3	-0.7
3251	ok	0.18	6.41e-02	7.91e-03	6.2	6.2	6.2	6.2	4.8	1.5	-13.8	0.5	1.37e-02	-0.6
3252	ok	0.18	5.70e-02	8.35e-03	6.2	6.2	6.2	6.2	5.1	1.7	-13.3	-0.4	-0.3	-0.7
3253	ok	0.18	6.67e-02	8.90e-03	6.2	6.2	6.2	6.2	5.0	0.5	-15.1	0.5	-2.34e-02	-0.6
3254	ok	0.18	5.97e-02	9.15e-03	6.2	6.2	6.2	6.2	4.4	1.7	-14.2	-0.5	-0.3	-0.7
3255	ok	0.18	6.93e-02	9.47e-03	6.2	6.2	6.2	6.2	4.2	9.61e-02	-16.4	0.5	-2.82e-02	-0.6
3256	ok	0.18	6.26e-02	9.63e-03	6.2	6.2	6.2	6.2	3.4	1.1	-15.8	-0.5	-0.3	-0.7
3257	ok	0.18	7.00e-02	9.75e-03	6.2	6.2	6.2	6.2	2.5	9.21e-02	-17.7	0.4	-3.26e-02	-0.6
3258	ok	0.18	6.39e-02	9.96e-03	6.2	6.2	6.2	6.2	1.3	1.1	-16.9	-0.5	-0.3	-0.7
3259	ok	0.18	7.04e-02	1.00e-02	6.2	6.2	6.2	6.2	0.1	0.1	-18.9	0.4	-3.15e-02	-0.6
3260	ok	0.18	6.45e-02	1.01e-02	6.2	6.2	6.2	6.2	-1.3	1.2	-17.9	-0.5	-0.3	-0.7
3261	ok	0.18	6.80e-02	1.01e-02	6.2	6.2	6.2	6.2	-4.2	0.1	-19.5	0.4	-2.96e-02	-0.6
3262	ok	0.18	6.30e-02	9.77e-03	6.2	6.2	6.2	6.2	-5.7	1.1	-18.4	-0.5	-0.3	-0.7
3263	ok	0.18	6.51e-02	9.88e-03	6.2	6.2	6.2	6.2	-6.8	-9.50e-02	-19.7	0.4	-2.87e-02	-0.6
3264	ok	0.18	6.11e-02	9.39e-03	6.2	6.2	6.2	6.2	-16.0	0.4	19.3	-0.5	-0.2	0.7
3265	ok	0.18	6.21e-02	9.38e-03	6.2	6.2	6.2	6.2	-9.3	-0.6	-19.9	0.4	-3.02e-02	-0.6
3266	ok	0.18	5.88e-02	8.82e-03	6.2	6.2	6.2	6.2	-13.4	0.3	19.3	-0.5	-0.3	0.7
3267	ok	0.18	5.83e-02	8.97e-03	6.2	6.2	6.2	6.2	-12.2	-0.8	-20.5	0.4	-3.06e-02	-0.6
3268	ok	0.18	5.79e-02	8.98e-03	6.2	6.2	6.2	6.2	-13.6	0.3	-19.8	-0.5	-0.3	-0.7
3269	ok	0.18	6.12e-02	9.54e-03	6.2	6.2	6.2	6.2	-14.8	-0.7	-20.6	0.4	-3.26e-02	-0.6
3270	ok	0.18	6.05e-02	9.52e-03	6.2	6.2	6.2	6.2	-8.4	0.9	18.5	-0.5	-0.3	0.7
3271	ok	0.18	6.47e-02	1.00e-02	6.2	6.2	6.2	6.2	-17.4	-0.5	-20.4	0.4	-3.03e-02	-0.6
3272	ok	0.18	6.29e-02	9.86e-03	6.2	6.2	6.2	6.2	-6.0	1.3	18.4	-0.5	-0.3	0.7
3273	ok	0.18	6.82e-02	1.02e-02	6.2	6.2	6.2	6.2	-19.6	-0.5	-19.5	0.4	-2.73e-02	-0.6
3274	ok	0.18	6.50e-02	1.01e-02	6.2	6.2	6.2	6.2	-1.9	1.4	18.1	-0.5	-0.3	0.7
3275	ok	0.18	7.11e-02	1.00e-02	6.2	6.2	6.2	6.2	-20.9	-0.6	-18.1	0.3	-2.53e-02	-0.6
3276	ok	0.18	6.50e-02	9.94e-03	6.2	6.2	6.2	6.2	0.9	1.3	17.4	-0.5	-0.3	0.7
3277	ok	0.18	7.13e-02	9.70e-03	6.2	6.2	6.2	6.2	-21.2	-0.8	-16.7	0.3	-2.58e-02	-0.6
3278	ok	0.18	6.43e-02	9.59e-03	6.2	6.2	6.2	6.2	3.2	1.2	16.3	-0.5	-0.3	0.7
3279	ok	0.18	7.10e-02	9.41e-03	6.2	6.2	6.2	6.2	-20.5	-1.0	-15.8	0.3	-2.56e-02	-0.6
3280	ok	0.18	6.14e-02	9.09e-03	6.2	6.2	6.2	6.2	4.5	1.7	14.8	-0.5	-0.3	0.7
3281	ok	0.18	6.85e-02	8.85e-03	6.2	6.2	6.2	6.2	-18.9	-0.8	-14.9	0.3	-2.75e-02	-0.6
3282	ok	0.18	5.85e-02	8.30e-03	6.2	6.2	6.2	6.2	5.2	1.7	13.8	-0.4	-0.3	0.7
3283	ok	0.18	6.56e-02	7.86e-03	6.2	6.2	6.2	6.2	-16.1	-0.4	-13.6	0.3	-2.56e-02	-0.6
3284	ok	0.18	5.42e-02	7.12e-03	6.2	6.2	6.2	6.2	4.8	1.9	13.0	-0.4	-0.3	0.7
3285	ok	0.18	6.12e-02	6.45e-03	6.2	6.2	6.2	6.2	-11.6	0.5	-11.0	0.3	-2.11e-02	-0.5
3286	ok	0.18	4.54e-02	5.22e-03	6.2	6.2	6.2	6.2	3.7	1.4	11.8	-0.4	-0.3	0.7
3287	ok	0.18	5.18e-02	4.07e-03	6.2	6.2	6.2	6.2	1.3	-0.7	7.2	-4.20e-02	-0.1	0.5
3288	ok	0.18	2.74e-02	2.23e-03	6.2	6.2	6.2	6.2	2.2	-0.3	7.6	-0.4	-0.2	0.6
3289	ok	0.18	3.57e-02	2.93e-03	6.2	6.2	6.2	6.2	0.7	-7.6	2.8	0.7	4.43e-02	0.4
3290	ok	0.18	3.47e-02	3.66e-03	6.2	6.2	6.2	6.2	-0.6	-10.7	2.4	6.49e-02	-9.88e-03	0.2
3291	ok	0.18	2.22e-02	1.92e-03	6.2	6.2	6.2	6.2	-9.69e-02	0.8	-0.1	-6.22e-02	0.2	-8.85e-02
3292	ok	0.18	2.41e-02	1.72e-03	6.2	6.2	6.2	6.2	-0.7	-2.9	-3.2	0.5	0.5	0.1
3293	ok	0.18	3.77e-02	3.17e-03	6.2	6.2	6.2	6.2	4.1	-0.9	-6.2	7.28e-02	0.2	-0.6
3294	ok	0.18	4.80e-02	5.73e-03	6.2	6.2	6.2	6.2	-13.1	0.5	-1.8	0.2	0.3	0.5
3295	ok	0.18	5.71e-02	7.22e-03	6.2	6.2	6.2	6.2	7.5	1.5	-10.4	0.1	0.2	-0.7
3296	ok	0.18	5.76e-02	8.62e-03	6.2	6.2	6.2	6.2	5.9	-1.2	-0.2	0.2	0.3	-0.6
3297	ok	0.18	6.25e-02	9.26e-03	6.2	6.2	6.2	6.2	8.3	2.0	-11.9	0.1	0.2	-0.7
3298	ok	0.18	6.02e-02	1.01e-02	6.2	6.2	6.2	6.2	7.0	-1.0	-0.2	0.2	0.3	-0.6
3299	ok	0.18	6.46e-02	1.04e-02	6.2	6.2	6.2	6.2	8.1	1.9	-12.8	0.1	0.2	-0.7
3300	ok	0.18	6.48e-02	1.09e-02	6.2	6.2	6.2	6.2	6.9	-0.9	-0.2	0.2	0.3	-0.6
3301	ok	0.18	6.60e-02	1.11e-02	6.2	6.2	6.2	6.2	6.7	2.1	-13.8	0.1	0.3	-0.7
3302	ok	0.18	6.57e-02	1.13e-02	6.2	6.2	6.2	6.2	6.3	-1.2	-0.2	0.2	0.3	-0.6
3303	ok	0.18	6.90e-02	1.15e-02	6.2	6.2	6.2	6.2	5.0	1.4	-15.4	0.1	0.2	-0.7
3304	ok	0.18	6.55e-02	1.14e-02	6.2	6.2	6.2	6.2	4.2	-0.7	-0.7	0.2	0.3	-0.6
3305	ok	0.18	6.89e-02	1.15e-02	6.2	6.2	6.2	6.2	2.2	1.2	-16.7	0.1	0.2	-0.7
3306	ok	0.18	6.50e-02	1.12e-02	6.2	6.2	6.2	6.2	1.8	-0.7	-0.6	0.2	0.3	-0.6
3307	ok	0.18	6.81e-02	1.13e-02	6.2	6.2	6.2	6.2	-27.0	-1.0	18.5	-9.81e-02	0.3	0.7
3308	ok	0.18	6.30e-02	1.08e-02	6.2	6.2	6.2	6.2	-1.2	-0.5	-0.9	0.2	0.3	-0.6
3309	ok	0.18	6.61e-02	1.09e-02	6.2	6.2	6.2	6.2	-24.3	-0.8	19.2	-0.1	0.3	0.7
3310	ok	0.18	6.08e-02	1.03e-02	6.2	6.2	6.2	6.2	-4.8	-0.3	-0.8	0.2	0.3	-0.6
3311	ok	0.18	6.08e-02	1.01e-02	6.2	6.2	6.2	6.2	-21.1	-0.6	19.5	0.1	0.3	0.7
3312	ok	0.18	5.84e-02	9.55e-03	6.2	6.2	6.2	6.2	-8.5	-4.43e-02	-0.9	0.2	0.3	-0.6
3313	ok	0.18	5.87e-02	9.32e-03	6.2	6.2	6.2	6.2	-17.7	-0.4	19.5	0.1	0.3	0.7
3314	ok	0.18	5.58e-02	8.89e-03	6.2	6.2	6.2	6.2	-11.9	5.26e-02	0.8	0.2	0.3	0.6
3315	ok	0.18	5.80e-02	9.40e-03	6.2	6.2	6.2	6.2	-13.7	-6.44e-02	19.0	0.1	0.3	0.7
3316	ok	0.18	5.74e-02	9.65e-03	6.2	6.2	6.2	6.2	-9.0	-5.42e-02	0.8	0.2	0.3	0.6
3317	ok	0.18	5.99e-02	1.02e-02	6.2	6.2	6.2	6.2	-21.3	-0.6	-19.8	0.1	0.3	-0.7
3318	ok	0.18	5.99e-02	1.04e-02	6.2	6.2	6.2	6.2	-5.6	-0.3	0.8	0.2	0.3	0.6
3319	ok	0.18	6.53e-02	1.09e-02	6.2	6.2	6.2	6.2	-7.6	0.7	18.4	0.1	0.2	0.7
3320	ok	0.18	6.23e-02	1.09e-02	6.2	6.2	6.2	6.2	-2.1	-0.5	0.8	0.2	0.3	0.6
3321	ok	0.18	6.76e-02	1.14e-02	6.2	6.2	6.2	6.2	-2.3	1.0	17.9	0.1	0.2	0.7
3322	ok	0.18	6.48e-02	1.11e-02	6.2	6.2	6.2	6.2	1.0	-0.6	0.7	0.2	0.3	0.6
3323	ok	0.18	6.91e-02	1.15e-02	6.2	6.2	6.2	6.2	1.3	1.2	17.0	0.1	0.2	0.7
3324	ok	0.18	6.58e-02	1.13e-02	6.2	6.2	6.2	6.2	3.6	-0.7	0.7	0.2	0.3	0.6
3325	ok	0.18	6.98e-02	1.15e-02	6.2	6.2	6.2	6.2	4.4	1.4	15.9	0.1	0.2	0.7
3326	ok	0.18	6.66e-02	1.12e-02	6.2	6.2	6.2	6.2	6.0	-1.2	0.3	0.2	0.3	0.6
3327	ok	0.18	6.71e-02	1.11e-02	6.2	6.2	6.2	6.2	6.5	2.1	14.3	0.1	0.3	0.7

3328	ok	0.18	6.43e-02	1.08e-02	6.2	6.2	6.2	6.2	6.9	-0.9	0.3	0.2	0.3	0.6
3329	ok	0.18	6.59e-02	1.03e-02	6.2	6.2	6.2	6.2	8.1	1.9	13.2	0.1	0.2	0.7
3330	ok	0.18	6.14e-02	1.00e-02	6.2	6.2	6.2	6.2	7.1	-1.0	0.2	0.2	0.3	0.6
3331	ok	0.18	6.36e-02	9.20e-03	6.2	6.2	6.2	6.2	8.4	1.9	12.2	0.1	0.2	0.7
3332	ok	0.18	5.87e-02	8.56e-03	6.2	6.2	6.2	6.2	6.1	-1.3	0.2	0.2	0.3	0.6
3333	ok	0.18	5.81e-02	7.18e-03	6.2	6.2	6.2	6.2	7.6	1.4	10.6	0.1	0.2	0.7
3334	ok	0.18	4.88e-02	5.70e-03	6.2	6.2	6.2	6.2	-13.0	0.5	1.8	0.2	0.3	-0.5
3335	ok	0.18	3.83e-02	3.16e-03	6.2	6.2	6.2	6.2	4.2	-0.9	6.3	7.19e-02	0.2	0.6
3336	ok	0.18	2.40e-02	1.69e-03	6.2	6.2	6.2	6.2	-0.7	-2.9	3.1	0.5	0.5	-0.1
3337	ok	0.18	2.22e-02	1.94e-03	6.2	6.2	6.2	6.2	-2.6	-3.9	3.0	-8.40e-02	-3.65e-03	0.2
3338	ok	0.18	9.62e-03	3.08e-04	6.2	6.2	6.2	6.2	0.1	-0.4	0.4	7.26e-02	7.89e-02	-5.74e-02
3339	ok	0.18	2.77e-02	1.75e-03	6.2	6.2	6.2	6.2	-4.4	-1.7	-2.0	0.4	0.1	0.2
3340	ok	0.18	3.45e-02	4.37e-03	6.2	6.2	6.2	6.2	-6.5	3.56e-02	-2.4	0.3	0.1	0.3
3341	ok	0.18	3.48e-02	5.94e-03	6.2	6.2	6.2	6.2	7.6	-0.7	1.8	-0.1	-4.45e-02	-0.5
3342	ok	0.18	3.48e-02	7.29e-03	6.2	6.2	6.2	6.2	11.5	1.1	0.7	9.77e-03	-1.58e-02	-0.5
3343	ok	0.18	3.51e-02	7.92e-03	6.2	6.2	6.2	6.2	-25.8	0.5	0.1	-4.99e-02	-5.14e-02	0.5
3344	ok	0.18	3.39e-02	8.73e-03	6.2	6.2	6.2	6.2	-27.4	-1.0	-0.1	-5.92e-02	5.12e-02	0.5
3345	ok	0.18	3.47e-02	9.03e-03	6.2	6.2	6.2	6.2	-29.4	0.5	0.3	-6.34e-02	-5.04e-02	0.5
3346	ok	0.18	3.27e-02	9.59e-03	6.2	6.2	6.2	6.2	-30.6	-1.0	7.97e-03	-6.98e-02	4.65e-02	0.5
3347	ok	0.18	3.39e-02	9.68e-03	6.2	6.2	6.2	6.2	9.5	-0.1	-0.3	4.21e-02	2.47e-02	-0.7
3348	ok	0.18	3.06e-02	9.97e-03	6.2	6.2	6.2	6.2	9.4	0.7	0.3	-3.13e-03	-3.40e-02	-0.6
3349	ok	0.18	3.20e-02	1.00e-02	6.2	6.2	6.2	6.2	7.8	-4.78e-02	-0.5	3.47e-02	4.27e-02	-0.7
3350	ok	0.18	2.74e-02	1.01e-02	6.2	6.2	6.2	6.2	6.7	0.6	-0.2	-2.43e-03	4.68e-04	-0.6
3351	ok	0.18	2.72e-02	1.00e-02	6.2	6.2	6.2	6.2	5.3	-4.97e-02	-0.6	2.90e-02	1.75e-02	-0.7
3352	ok	0.18	2.29e-02	9.90e-03	6.2	6.2	6.2	6.2	3.9	0.5	-0.3	-1.98e-03	4.19e-03	-0.6
3353	ok	0.18	2.35e-02	9.60e-03	6.2	6.2	6.2	6.2	2.0	-6.05e-02	-0.7	3.19e-02	1.17e-02	-0.7
3354	ok	0.18	1.93e-02	9.31e-03	6.2	6.2	6.2	6.2	3.97e-02	0.3	-0.7	-2.12e-03	7.92e-03	-0.6
3355	ok	0.18	1.96e-02	8.81e-03	6.2	6.2	6.2	6.2	-2.1	-6.11e-02	-0.7	2.83e-02	7.24e-03	-0.7
3356	ok	0.18	1.50e-02	8.32e-03	6.2	6.2	6.2	6.2	-4.4	9.80e-02	-0.6	-1.72e-03	1.06e-02	-0.6
3357	ok	0.18	1.51e-02	7.72e-03	6.2	6.2	6.2	6.2	-20.8	0.4	1.0	-4.59e-02	-2.53e-02	0.6
3358	ok	0.18	1.17e-02	7.73e-03	6.2	6.2	6.2	6.2	-21.2	-0.5	0.8	-5.58e-02	2.47e-02	0.6
3359	ok	0.18	1.26e-02	7.66e-03	6.2	6.2	6.2	6.2	-17.3	0.4	1.0	-4.27e-02	-2.02e-02	0.6
3360	ok	0.18	1.09e-02	7.78e-03	6.2	6.2	6.2	6.2	-17.6	-0.4	0.8	-5.41e-02	2.16e-02	0.6
3361	ok	0.18	1.07e-02	7.71e-03	6.2	6.2	6.2	6.2	-13.1	0.4	1.0	-4.19e-02	-1.44e-02	0.6
3362	ok	0.18	1.11e-02	7.92e-03	6.2	6.2	6.2	6.2	-13.4	-0.3	0.8	-5.29e-02	1.03e-02	0.6
3363	ok	0.18	1.22e-02	7.92e-03	6.2	6.2	6.2	6.2	-17.5	0.4	-1.0	-4.28e-02	-2.02e-02	-0.6
3364	ok	0.18	1.13e-02	8.08e-03	6.2	6.2	6.2	6.2	-21.5	-0.5	-0.8	-5.56e-02	2.51e-02	-0.6
3365	ok	0.18	1.43e-02	7.98e-03	6.2	6.2	6.2	6.2	-21.3	0.4	-1.0	-4.58e-02	-2.53e-02	-0.6
3366	ok	0.18	1.36e-02	8.44e-03	6.2	6.2	6.2	6.2	-5.7	6.83e-02	0.7	-1.01e-03	9.97e-03	0.6
3367	ok	0.18	1.81e-02	8.92e-03	6.2	6.2	6.2	6.2	-3.5	-7.51e-02	0.7	2.87e-02	7.37e-03	0.7
3368	ok	0.18	1.78e-02	9.40e-03	6.2	6.2	6.2	6.2	-1.4	0.2	0.6	-1.12e-03	7.36e-03	0.6
3369	ok	0.18	2.21e-02	9.67e-03	6.2	6.2	6.2	6.2	0.7	-6.95e-02	0.7	3.27e-02	1.18e-02	0.7
3370	ok	0.18	2.12e-02	9.91e-03	6.2	6.2	6.2	6.2	2.7	0.4	0.3	-8.29e-04	3.76e-03	0.6
3371	ok	0.18	2.58e-02	9.99e-03	6.2	6.2	6.2	6.2	4.2	-4.66e-02	0.5	3.01e-02	1.76e-02	0.7
3372	ok	0.18	2.61e-02	1.01e-02	6.2	6.2	6.2	6.2	5.9	0.6	0.2	-1.33e-03	2.35e-04	0.6
3373	ok	0.18	3.11e-02	9.98e-03	6.2	6.2	6.2	6.2	7.3	-3.79e-02	0.5	3.60e-02	4.25e-02	0.7
3374	ok	0.18	2.99e-02	9.90e-03	6.2	6.2	6.2	6.2	8.9	0.7	-0.2	-2.28e-03	-3.40e-02	0.6
3375	ok	0.18	3.39e-02	9.60e-03	6.2	6.2	6.2	6.2	9.4	-9.55e-02	0.3	4.34e-02	2.47e-02	0.7
3376	ok	0.18	3.28e-02	9.49e-03	6.2	6.2	6.2	6.2	-30.3	-1.0	-2.99e-02	-7.00e-02	4.66e-02	-0.5
3377	ok	0.18	3.52e-02	8.92e-03	6.2	6.2	6.2	6.2	-29.1	0.4	-0.3	-6.29e-02	-5.06e-02	-0.5
3378	ok	0.18	3.43e-02	8.64e-03	6.2	6.2	6.2	6.2	-27.1	-1.0	0.1	-5.94e-02	5.12e-02	-0.5
3379	ok	0.18	3.57e-02	7.84e-03	6.2	6.2	6.2	6.2	-25.5	0.5	-0.1	-4.96e-02	-5.14e-02	-0.5
3380	ok	0.18	3.52e-02	7.22e-03	6.2	6.2	6.2	6.2	11.7	1.1	-0.7	1.02e-02	-1.57e-02	0.5
3381	ok	0.18	3.52e-02	5.90e-03	6.2	6.2	6.2	6.2	7.9	-0.7	-1.8	-0.1	-4.46e-02	0.5
3382	ok	0.18	3.49e-02	4.34e-03	6.2	6.2	6.2	6.2	-6.4	4.71e-02	2.4	0.3	0.1	-0.3
3383	ok	0.18	2.78e-02	1.76e-03	6.2	6.2	6.2	6.2	-4.4	-1.7	2.0	0.4	0.1	-0.2
3384	ok	0.18	9.69e-03	3.12e-04	6.2	6.2	6.2	6.2	0.1	-0.4	-0.4	7.25e-02	7.85e-02	5.75e-02

Nodo	**x/d**	**V N/M**	**ver. rid**	**Af pr-**	**Af pr+**	**Af sec-**	**Af sec+**	**N x**	**N y**	**N xy**	**M x**	**M y**	**M xy**
								-30.61	-19.21	-22.84	-8.95	-7.32	-4.10
	0.18	0.77	0.01	6.22	6.22	6.22	6.22	27.00	18.11	19.53	24.97	15.65	4.09

Nodo	**Stato**	**Max tau**	**Ver V pr**	**Ver V sec**	**Af V pr**	**Af V sec**	**V pr**	**V sec**
		kN/ m2					kN/ m	kN/ m
2609	ok	0.0						
2610	ok	0.0						
2611	ok	3.41						
2612	ok	2.03						
2613	ok	1.26						
2614	ok	0.79						
2615	ok	0.98						
2616	ok	1.55						
2617	ok	2.00						
2618	ok	2.56						
2619	ok	4.38						
2620	ok	0.0						
2621	ok	4.35						

2622	ok	2.80
2623	ok	2.17
2624	ok	1.71
2625	ok	1.19
2626	ok	0.79
2627	ok	1.33
2628	ok	1.84
2629	ok	2.32
2630	ok	2.82
2631	ok	4.30
2632	ok	0.0
2633	ok	4.02
2634	ok	2.82
2635	ok	2.27
2636	ok	1.77
2637	ok	1.25
2638	ok	0.71
2639	ok	1.25
2640	ok	1.76
2641	ok	2.24
2642	ok	2.81
2643	ok	4.20
2644	ok	0.0
2645	ok	4.21
2646	ok	2.53
2647	ok	1.99
2648	ok	1.52
2649	ok	0.95
2650	ok	0.78
2651	ok	1.25
2652	ok	2.01
2653	ok	3.40
2654	ok	0.0
2655	ok	0.0
2656	ok	0.0
2657	ok	0.0
2658	ok	0.0
2659	ok	0.53
2660	ok	0.43
2661	ok	0.29
2662	ok	0.28
2663	ok	0.41
2664	ok	0.54
2665	ok	0.82
2666	ok	0.0
2667	ok	0.0
2668	ok	0.0
2669	ok	0.77
2670	ok	0.58
2671	ok	0.51
2672	ok	0.35
2673	ok	0.23
2674	ok	0.40
2675	ok	0.54
2676	ok	0.58
2677	ok	0.84
2678	ok	0.0
2679	ok	0.0
2680	ok	0.0
2681	ok	0.79
2682	ok	0.59
2683	ok	0.53
2684	ok	0.38
2685	ok	0.21
2686	ok	0.37
2687	ok	0.53
2688	ok	0.60
2689	ok	0.77
2690	ok	0.0
2691	ok	0.0
2692	ok	0.0
2693	ok	0.82
2694	ok	0.54
2695	ok	0.41
2696	ok	0.28
2697	ok	0.29
2698	ok	0.43
2699	ok	0.54

2700	ok	0.0
2701	ok	0.0
2702	ok	0.0
2703	ok	3.58
2704	ok	2.95
2705	ok	1.47
2706	ok	0.56
2707	ok	0.32
2708	ok	0.28
2709	ok	0.32
2710	ok	0.37
2711	ok	0.45
2712	ok	0.89
2713	ok	2.91
2714	ok	4.02
2715	ok	2.43
2716	ok	0.84
2717	ok	0.44
2718	ok	0.37
2719	ok	0.33
2720	ok	0.31
2721	ok	0.34
2722	ok	0.38
2723	ok	0.46
2724	ok	0.89
2725	ok	3.01
2726	ok	4.01
2727	ok	2.57
2728	ok	0.85
2729	ok	0.45
2730	ok	0.38
2731	ok	0.34
2732	ok	0.31
2733	ok	0.34
2734	ok	0.38
2735	ok	0.44
2736	ok	0.83
2737	ok	2.51
2738	ok	3.86
2739	ok	2.88
2740	ok	0.88
2741	ok	0.45
2742	ok	0.37
2743	ok	0.31
2744	ok	0.28
2745	ok	0.33
2746	ok	0.55
2747	ok	1.49
2748	ok	2.83
2749	ok	3.50
2915	ok	3.17
2916	ok	0.92
2917	ok	0.73
2918	ok	0.64
2919	ok	0.57
2920	ok	0.48
2921	ok	0.53
2922	ok	0.59
2923	ok	0.66
2924	ok	0.63
2925	ok	0.87
2926	ok	0.52
2927	ok	0.83
2928	ok	0.68
2929	ok	0.69
2930	ok	0.63
2931	ok	0.57
2932	ok	0.50
2933	ok	0.59
2934	ok	0.65
2935	ok	0.71
2936	ok	0.67
2937	ok	0.88
2938	ok	0.54
2939	ok	0.85
2940	ok	0.69
2941	ok	0.71
2942	ok	0.65

2943	ok	0.59
2944	ok	0.50
2945	ok	0.59
2946	ok	0.64
2947	ok	0.70
2948	ok	0.69
2949	ok	0.84
2950	ok	0.50
2951	ok	0.87
2952	ok	0.63
2953	ok	0.65
2954	ok	0.59
2955	ok	0.52
2956	ok	0.48
2957	ok	0.57
2958	ok	0.64
2959	ok	0.72
2960	ok	0.91
2961	ok	3.13
2962	ok	2.16
2963	ok	1.36
2964	ok	1.22
2965	ok	1.22
2966	ok	1.09
2967	ok	0.90
2968	ok	1.06
2969	ok	1.09
2970	ok	1.04
2971	ok	1.03
2972	ok	0.74
2973	ok	0.80
2974	ok	0.86
2975	ok	1.15
2976	ok	1.12
2977	ok	1.19
2978	ok	1.14
2979	ok	0.91
2980	ok	1.15
2981	ok	1.22
2982	ok	1.10
2983	ok	1.10
2984	ok	0.81
2985	ok	0.75
2986	ok	0.86
2987	ok	1.15
2988	ok	1.13
2989	ok	1.22
2990	ok	1.16
2991	ok	0.89
2992	ok	1.16
2993	ok	1.22
2994	ok	1.13
2995	ok	1.16
2996	ok	0.85
2997	ok	0.79
2998	ok	0.74
2999	ok	1.03
3000	ok	1.03
3001	ok	1.08
3002	ok	1.06
3003	ok	0.90
3004	ok	1.09
3005	ok	1.21
3006	ok	1.22
3007	ok	1.36
3008	ok	2.13
3009	ok	1.64
3010	ok	1.86
3011	ok	1.45
3012	ok	2.83
3013	ok	1.40
3014	ok	2.93
3015	ok	1.38
3016	ok	2.82
3017	ok	1.43
3018	ok	2.42
3019	ok	1.05
3020	ok	1.66

3021	ok	1.10						
3022	ok	2.41						
3023	ok	1.37						
3024	ok	2.78						
3025	ok	1.31						
3026	ok	3.16						
3027	ok	1.33						
3028	ok	2.75						
3029	ok	1.38						
3030	ok	2.33						
3031	ok	1.08						
3032	ok	1.59						
3033	ok	1.07						
3034	ok	2.39						
3035	ok	1.40						
3036	ok	2.81						
3037	ok	1.34						
3038	ok	3.21						
3039	ok	1.32						
3040	ok	2.78						
3041	ok	1.37						
3042	ok	2.39						
3043	ok	1.11						
3044	ok	1.64						
3045	ok	1.05						
3046	ok	2.40						
3047	ok	1.42						
3048	ok	2.80						
3049	ok	1.40						
3050	ok	2.92						
3051	ok	1.40						
3052	ok	2.83						
3053	ok	1.45						
3054	ok	1.88						
3055	ok	1.65						
3056	ok	1.39						
3057	ok	2.27						
3058	ok	1.60						
3059	ok	3.88						
3060	ok	1.85						
3061	ok	4.72						
3062	ok	1.75						
3063	ok	4.22						
3064	ok	1.83						
3065	ok	3.31						
3066	ok	1.48						
3067	ok	2.13						
3068	ok	1.48						
3069	ok	3.31						
3070	ok	1.83						
3071	ok	4.60						
3072	ok	1.94						
3073	ok Av	5.24	0.17	0.16	4.3	4.1	60.1	57.0
3074	ok	1.93						
3075	ok	4.41						
3076	ok	1.83						
3077	ok	3.18						
3078	ok	1.45						
3079	ok	2.01						
3080	ok	1.48						
3081	ok	3.29						
3082	ok	1.86						
3083	ok	4.58						
3084	ok	1.97						
3085	ok Av	5.34	0.18	0.17	4.4	4.2	61.4	57.8
3086	ok	1.98						
3087	ok	4.61						
3088	ok	1.83						
3089	ok	3.27						
3090	ok	1.47						
3091	ok	2.12						
3092	ok	1.47						
3093	ok	3.30						
3094	ok	1.83						
3095	ok	4.22						
3096	ok	1.75						
3097	ok	4.72						
3098	ok	1.85						

3099	ok	3.89
3100	ok	1.60
3101	ok	2.28
3102	ok	1.40
3103	ok	1.32
3104	ok	1.53
3105	ok	1.15
3106	ok	1.86
3107	ok	1.14
3108	ok	1.94
3109	ok	1.13
3110	ok	1.92
3111	ok	1.09
3112	ok	1.76
3113	ok	0.98
3114	ok	1.54
3115	ok	0.99
3116	ok	1.73
3117	ok	1.11
3118	ok	1.91
3119	ok	1.23
3120	ok	1.95
3121	ok	1.24
3122	ok	1.90
3123	ok	1.12
3124	ok	1.70
3125	ok	0.98
3126	ok	1.49
3127	ok	1.00
3128	ok	1.74
3129	ok	1.14
3130	ok	1.94
3131	ok	1.27
3132	ok	1.98
3133	ok	1.24
3134	ok	1.90
3135	ok	1.11
3136	ok	1.71
3137	ok	0.99
3138	ok	1.54
3139	ok	0.99
3140	ok	1.76
3141	ok	1.10
3142	ok	1.89
3143	ok	1.14
3144	ok	1.94
3145	ok	1.13
3146	ok	1.86
3147	ok	1.14
3148	ok	1.53
3149	ok	1.33
3150	ok	0.57
3151	ok	0.39
3152	ok	0.52
3153	ok	0.32
3154	ok	0.43
3155	ok	0.30
3156	ok	0.43
3157	ok	0.31
3158	ok	0.44
3159	ok	0.32
3160	ok	0.45
3161	ok	0.35
3162	ok	0.43
3163	ok	0.33
3164	ok	0.42
3165	ok	0.30
3166	ok	0.43
3167	ok	0.30
3168	ok	0.42
3169	ok	0.30
3170	ok	0.43
3171	ok	0.32
3172	ok	0.44
3173	ok	0.35
3174	ok	0.44
3175	ok	0.31
3176	ok	0.43

3177	ok	0.30
3178	ok	0.43
3179	ok	0.31
3180	ok	0.43
3181	ok	0.30
3182	ok	0.42
3183	ok	0.33
3184	ok	0.44
3185	ok	0.36
3186	ok	0.45
3187	ok	0.32
3188	ok	0.44
3189	ok	0.32
3190	ok	0.43
3191	ok	0.30
3192	ok	0.43
3193	ok	0.32
3194	ok	0.52
3195	ok	0.39
3196	ok	0.57
3197	ok	0.25
3198	ok	0.34
3199	ok	0.34
3200	ok	0.31
3201	ok	0.31
3202	ok	0.31
3203	ok	0.31
3204	ok	0.31
3205	ok	0.31
3206	ok	0.30
3207	ok	0.31
3208	ok	0.29
3209	ok	0.30
3210	ok	0.29
3211	ok	0.29
3212	ok	0.29
3213	ok	0.29
3214	ok	0.30
3215	ok	0.30
3216	ok	0.30
3217	ok	0.30
3218	ok	0.29
3219	ok	0.29
3220	ok	0.28
3221	ok	0.30
3222	ok	0.29
3223	ok	0.30
3224	ok	0.30
3225	ok	0.30
3226	ok	0.30
3227	ok	0.30
3228	ok	0.30
3229	ok	0.30
3230	ok	0.29
3231	ok	0.30
3232	ok	0.30
3233	ok	0.31
3234	ok	0.31
3235	ok	0.31
3236	ok	0.31
3237	ok	0.31
3238	ok	0.31
3239	ok	0.31
3240	ok	0.32
3241	ok	0.34
3242	ok	0.35
3243	ok	0.25
3244	ok	0.24
3245	ok	0.18
3246	ok	0.26
3247	ok	0.15
3248	ok	0.24
3249	ok	0.15
3250	ok	0.24
3251	ok	0.15
3252	ok	0.24
3253	ok	0.14
3254	ok	0.24

3255	ok	0.14
3256	ok	0.24
3257	ok	0.14
3258	ok	0.23
3259	ok	0.14
3260	ok	0.23
3261	ok	0.13
3262	ok	0.23
3263	ok	0.13
3264	ok	0.23
3265	ok	0.13
3266	ok	0.24
3267	ok	0.13
3268	ok	0.24
3269	ok	0.13
3270	ok	0.23
3271	ok	0.13
3272	ok	0.23
3273	ok	0.13
3274	ok	0.23
3275	ok	0.14
3276	ok	0.23
3277	ok	0.14
3278	ok	0.24
3279	ok	0.15
3280	ok	0.24
3281	ok	0.14
3282	ok	0.24
3283	ok	0.15
3284	ok	0.24
3285	ok	0.15
3286	ok	0.24
3287	ok	0.15
3288	ok	0.26
3289	ok	0.18
3290	ok	0.24
3291	ok	0.24
3292	ok	0.23
3293	ok	0.15
3294	ok	0.14
3295	ok	0.13
3296	ok	0.14
3297	ok	0.12
3298	ok	0.14
3299	ok	0.12
3300	ok	0.14
3301	ok	0.12
3302	ok	0.14
3303	ok	0.13
3304	ok	0.14
3305	ok	0.12
3306	ok	0.13
3307	ok	0.12
3308	ok	0.13
3309	ok	0.12
3310	ok	0.13
3311	ok	0.12
3312	ok	0.13
3313	ok	0.12
3314	ok	0.13
3315	ok	0.12
3316	ok	0.13
3317	ok	0.12
3318	ok	0.13
3319	ok	0.12
3320	ok	0.13
3321	ok	0.12
3322	ok	0.14
3323	ok	0.13
3324	ok	0.14
3325	ok	0.13
3326	ok	0.14
3327	ok	0.13
3328	ok	0.14
3329	ok	0.13
3330	ok	0.14
3331	ok	0.13
3332	ok	0.14

3333	ok	0.13
3334	ok	0.14
3335	ok	0.15
3336	ok	0.23
3337	ok	0.24
3338	ok	0.14
3339	ok	0.34
3340	ok	0.41
3341	ok	0.45
3342	ok	0.45
3343	ok	0.47
3344	ok	0.46
3345	ok	0.47
3346	ok	0.46
3347	ok	0.48
3348	ok	0.47
3349	ok	0.48
3350	ok	0.47
3351	ok	0.48
3352	ok	0.47
3353	ok	0.48
3354	ok	0.47
3355	ok	0.48
3356	ok	0.47
3357	ok	0.48
3358	ok	0.48
3359	ok	0.48
3360	ok	0.48
3361	ok	0.48
3362	ok	0.48
3363	ok	0.48
3364	ok	0.48
3365	ok	0.48
3366	ok	0.48
3367	ok	0.48
3368	ok	0.48
3369	ok	0.48
3370	ok	0.48
3371	ok	0.48
3372	ok	0.48
3373	ok	0.49
3374	ok	0.47
3375	ok	0.48
3376	ok	0.46
3377	ok	0.48
3378	ok	0.46
3379	ok	0.47
3380	ok	0.46
3381	ok	0.46
3382	ok	0.42
3383	ok	0.35
3384	ok	0.14

Nodo	Max tau	Ver V pr	Ver V sec	Af V pr	Af V sec	V pr	V sec
	5.34	0.18	0.17	4.41	4.16	61.35	57.81

Nodo	Stato	V 6.47	V 6.53	Beta	f. a fon	f. Uout	Aw tot	Asw,min	n. x serie	n.ser 0(R)	n.ser 90	Rif. cmb
							cm2	cm2				
2657	ok	0.15	0.05	1.46	0.0	0.0	0.0	0.0	0	0	0	120
2667	ok	0.28	0.08	1.35	0.0	0.0	0.0	0.0	0	0	0	114
2679	ok	0.28	0.09	1.32	0.0	0.0	0.0	0.0	0	0	0	114
2691	ok	0.27	0.08	1.32	0.0	0.0	0.0	0.0	0	0	0	108
2701	ok	0.15	0.05	1.47	0.0	0.0	0.0	0.0	0	0	0	106

STATI LIMITE D' ESERCIZIO

LEGENDA TABELLA STATI LIMITE D' ESERCIZIO

In tabella vengono riportati i valori di interesse per il controllo degli stati limite d'esercizio.

In particolare vengono riportati, in relazione al tipo di elemento strutturale, i risultati relativi alle tre categorie di combinazione considerate:

- Combinazioni rare
- Combinazioni frequenti
- Combinazioni quasi permanenti.

I valori di interesse sono i seguenti:

rRfck	rapporto tra la massima compressione nel calcestruzzo e la tensione fck in combinazioni rare [*normalizzato a 1*]
rRfyk	rapporto tra la massima tensione nell'acciaio e la tensione fyk in combinazioni rare [*normalizzato a 1*]
rPfck	rapporto tra la massima compressione nel calcestruzzo e la tensione fck in combinazioni quasi permanenti [*normalizzato a 1*]
wR	apertura caratteristica delle fessure in combinazioni rare [*mm*]
wF	apertura caratteristica delle fessure in combinazioni frequenti [*mm*]
wP	apertura caratteristica delle fessure in combinazioni quasi permanenti [*mm*]
dR	massima deformazione in combinazioni rare
dF	massima deformazione in combinazioni frequenti
dP	massima deformazione in combinazioni quasi permanenti

Per ognuno dei nove valori soprariportati viene indicata (Rif.cmb) la combinazione in cui si è verificato.

In relazione al tipo di elemento strutturale i valori sono selezionati nel modo seguente:

pilastri	**rRfck**	**rRfyk**	**rPfck**	per sezioni significative
travi	**rRfck**	**rRfyk**	**rPfck**	per sezioni significative
	wR	**wF**	**wP**	per sezioni significative
	dR	**dF**	**dP**	massimi in campata
setti e gusci	**rRfck**	**rRfyk**	**rPfck**	massimi nei nodi dell'elemento
	wR	**wF**	**wP**	massimi nei nodi dell'elemento

Si precisa che i valori di massima deformazione per travi sono riferiti al piano verticale (piano locale 1-2 con momenti flettenti 3-3).

Pilas.	Pos.	rRfck	rRfyk	rPfck	Rif. cmb	Pos.	rRfck	rRfyk	rPfck	Rif. cmb
	cm					cm				
1	0.0	0.04	0.02	0.05	130,130,139	159.5	0.03	0.02	0.04	126,126,138
	319.0	0.08	0.05	0.11	126,121,138					
2	0.0	0.06	0.04	0.08	130,130,139	159.5	0.04	0.03	0.05	126,126,138
	319.0	0.07	0.04	0.09	126,126,138					
3	0.0	0.05	0.03	0.07	130,130,139	159.5	0.04	0.02	0.05	130,130,139
	319.0	0.05	0.03	0.07	126,126,138					
4	0.0	0.06	0.03	0.07	130,130,139	159.5	0.04	0.02	0.05	126,126,138
	319.0	0.06	0.03	0.07	126,126,138					
5	0.0	0.04	0.02	0.05	130,130,139	159.5	0.03	0.02	0.04	126,126,138
	319.0	0.08	0.04	0.11	126,121,138					
22	0.0	0.11	0.08	0.13	126,126,138	45.0	0.04	0.02	0.05	126,126,138
23	0.0	0.06	0.03	0.07	126,126,138	45.0	0.06	0.03	0.07	126,126,138
24	0.0	0.05	0.03	0.06	126,126,138	45.0	0.05	0.03	0.06	126,126,138
25	0.0	0.06	0.03	0.07	126,126,138	45.0	0.04	0.02	0.05	126,126,138
26	0.0	0.10	0.08	0.13	126,126,138	45.0	0.05	0.02	0.05	126,126,138
Pilas.		**rRfck**	**rRfyk**	**rPfck**			**rRfck**	**rRfyk**	**rPfck**	
		0.11	0.08	0.13						

Trave	Pos.	rRfck	rRfyk	rPfck	Rif. cmb	wR	wF	wP	Rif. cmb	dR	dF	dP	Rif. cmb
	cm					mm	mm	mm		cm	cm	cm	
6	0.0	0.02	0.02	0.02	126,126,138	0.0	0.0	0.0	0,0,0	-0.04	-0.04	-0.04	
	138.0	5.33e-03	5.49e-03	7.10e-03	123,123,139	0.0	0.0	0.0	0,0,0				
7	0.0	0.01	0.01	0.02	123,123,139	0.0	0.0	0.0	0,0,0	0.07	0.07	0.07	
	138.0	6.79e-03	6.88e-03	9.05e-03	123,123,139	0.0	0.0	0.0	0,0,0				
8	0.0	9.85e-03	0.01	0.01	123,123,139	0.0	0.0	0.0	0,0,0	-0.13	-0.13	-0.13	
	138.0	0.02	0.02	0.02	123,123,139	0.0	0.0	0.0	0,0,0				
9	0.0	0.02	0.02	0.02	123,123,139	0.0	0.0	0.0	0,0,0	0.14	0.14	0.14	
	138.0	9.85e-03	0.01	0.01	123,123,139	0.0	0.0	0.0	0,0,0				
10	0.0	6.73e-03	6.81e-03	8.97e-03	123,123,139	0.0	0.0	0.0	0,0,0	-0.10	-0.10	-0.10	
	138.2	0.01	0.01	0.02	126,126,138	0.0	0.0	0.0	0,0,0				
11	0.0	0.01	0.01	0.02	126,126,138	0.0	0.0	0.0	0,0,0	0.09	0.09	0.09	
	138.2	6.73e-03	6.81e-03	8.97e-03	123,123,139	0.0	0.0	0.0	0,0,0				
12	0.0	6.56e-03	6.64e-03	8.75e-03	123,123,139	0.0	0.0	0.0	0,0,0	-0.09	-0.09	-0.09	
	138.2	0.01	0.01	0.02	126,126,138	0.0	0.0	0.0	0,0,0				
13	0.0	0.01	0.01	0.02	126,126,138	0.0	0.0	0.0	0,0,0	0.10	0.10	0.10	
	138.2	6.56e-03	6.64e-03	8.75e-03	123,123,139	0.0	0.0	0.0	0,0,0				
14	0.0	0.01	0.02	0.02	123,123,139	0.0	0.0	0.0	0,0,0	-0.03	-0.03	-0.03	
	135.5	0.04	0.03	0.05	126,126,138	0.0	0.0	0.0	0,0,0				
15	0.0	0.03	0.03	0.05	126,126,138	0.0	0.0	0.0	0,0,0	-0.03	-0.03	-0.03	
	135.5	0.08	0.07	0.11	126,126,138	0.0	0.0	0.0	0,0,0				
16	0.0	0.10	0.08	0.13	126,126,138	0.0	0.0	0.0	0,0,0	-0.06	-0.06	-0.06	
	135.5	0.07	0.06	0.09	126,126,138	0.0	0.0	0.0	0,0,0				
17	0.0	0.07	0.06	0.09	126,126,138	0.0	0.0	0.0	0,0,0	-0.06	-0.06	-0.06	
	135.5	0.10	0.08	0.13	126,126,138	0.0	0.0	0.0	0,0,0				
18	0.0	0.09	0.10	0.12	126,126,138	0.0	0.0	0.0	0,0,0	-0.03	-0.03	-0.03	
	90.4	0.08	0.07	0.10	126,126,138	0.0	0.0	0.0	0,0,0				
19	0.0	0.08	0.07	0.10	126,126,138	0.0	0.0	0.0	0,0,0	-0.03	-0.03	-0.03	
	90.4	0.09	0.10	0.12	126,126,138	0.0	0.0	0.0	0,0,0				
20	0.0	0.09	0.10	0.12	126,126,138	0.0	0.0	0.0	0,0,0	-0.03	-0.03	-0.03	
	90.4	0.08	0.08	0.10	126,126,138	0.0	0.0	0.0	0,0,0				
21	0.0	0.08	0.08	0.10	126,126,138	0.0	0.0	0.0	0,0,0	-0.03	-0.03	-0.03	
	90.4	0.09	0.10	0.12	126,126,138	0.0	0.0	0.0	0,0,0				
Trave		**rRfck**	**rRfyk**	**rPfck**		**wR**	**wF**	**wP**		**dR**	**dF**	**dP**	
		0.10	0.10	0.13		0.0	0.0	0.0		0.14	0.14	0.14	

Setto	rRfck	rRfyk	rPfck	Rif. cmb	wR	wF	wP	Rif. cmb
					mm	mm	mm	
553	0.07	0.09	0.09	126,126,138	0.0	0.0	0.0	0,0,0
554	0.10	0.12	0.12	126,126,138	0.0	0.0	0.0	0,0,0
555	0.10	0.13	0.13	126,126,138	0.0	0.0	0.0	0,0,0
556	0.10	0.12	0.13	126,126,138	0.0	0.0	0.0	0,0,0
557	0.07	0.09	0.09	126,126,138	0.0	0.0	0.0	0,0,0
558	0.04	0.02	0.05	126,126,138	0.0	0.0	0.0	0,0,0
559	0.07	0.04	0.09	126,126,138	0.0	0.0	0.0	0,0,0
560	0.08	0.06	0.10	126,126,138	0.0	0.0	0.0	0,0,0
561	0.08	0.06	0.10	126,126,138	0.0	0.0	0.0	0,0,0
562	0.08	0.05	0.10	126,126,138	0.0	0.0	0.0	0,0,0
563	0.05	0.03	0.07	126,126,138	0.0	0.0	0.0	0,0,0
564	0.07	0.05	0.09	126,126,138	0.0	0.0	0.0	0,0,0
565	0.08	0.06	0.10	126,126,138	0.0	0.0	0.0	0,0,0
566	0.09	0.07	0.11	126,126,138	0.0	0.0	0.0	0,0,0
567	0.09	0.07	0.11	126,126,138	0.0	0.0	0.0	0,0,0
568	0.08	0.05	0.10	126,126,138	0.0	0.0	0.0	0,0,0
569	0.05	0.03	0.07	126,126,138	0.0	0.0	0.0	0,0,0
570	0.08	0.05	0.10	126,126,138	0.0	0.0	0.0	0,0,0
571	0.09	0.07	0.11	126,126,138	0.0	0.0	0.0	0,0,0
572	0.09	0.08	0.11	126,126,138	0.0	0.0	0.0	0,0,0
573	0.08	0.07	0.11	126,126,138	0.0	0.0	0.0	0,0,0
574	0.07	0.06	0.09	126,126,138	0.0	0.0	0.0	0,0,0
575	0.06	0.03	0.07	126,126,138	0.0	0.0	0.0	0,0,0
576	0.08	0.06	0.10	126,126,138	0.0	0.0	0.0	0,0,0
577	0.08	0.07	0.11	126,126,138	0.0	0.0	0.0	0,0,0
578	0.08	0.07	0.10	126,126,138	0.0	0.0	0.0	0,0,0
579	0.07	0.05	0.09	126,126,138	0.0	0.0	0.0	0,0,0
580	0.04	0.02	0.05	126,126,138	0.0	0.0	0.0	0,0,0
581	0.02	0.03	0.02	124,126,139	0.0	0.0	0.0	0,0,0
582	0.02	0.03	0.03	130,126,139	0.0	0.0	0.0	0,0,0
583	0.02	0.04	0.03	130,126,139	0.0	0.0	0.0	0,0,0
584	0.02	0.04	0.02	130,126,139	0.0	0.0	0.0	0,0,0
585	0.02	0.04	0.02	130,126,139	0.0	0.0	0.0	0,0,0
586	0.02	0.03	0.02	130,126,139	0.0	0.0	0.0	0,0,0
587	0.02	0.04	0.02	130,126,139	0.0	0.0	0.0	0,0,0
588	0.02	0.04	0.02	126,126,138	0.0	0.0	0.0	0,0,0
589	0.02	0.04	0.02	126,126,138	0.0	0.0	0.0	0,0,0
590	0.02	0.03	0.02	130,126,139	0.0	0.0	0.0	0,0,0
591	0.01	0.03	0.02	126,126,138	0.0	0.0	0.0	0,0,0
592	0.01	0.03	0.02	130,126,139	0.0	0.0	0.0	0,0,0
593	0.02	0.03	0.02	130,126,139	0.0	0.0	0.0	0,0,0
594	0.02	0.04	0.02	126,126,138	0.0	0.0	0.0	0,0,0
595	0.02	0.04	0.02	126,126,138	0.0	0.0	0.0	0,0,0
596	0.02	0.04	0.02	126,126,139	0.0	0.0	0.0	0,0,0
597	0.02	0.04	0.02	130,126,139	0.0	0.0	0.0	0,0,0
598	0.02	0.04	0.02	130,126,139	0.0	0.0	0.0	0,0,0
599	0.02	0.04	0.02	130,126,139	0.0	0.0	0.0	0,0,0
600	0.02	0.04	0.03	130,126,139	0.0	0.0	0.0	0,0,0
601	0.02	0.04	0.03	130,126,139	0.0	0.0	0.0	0,0,0
602	0.02	0.04	0.03	130,126,139	0.0	0.0	0.0	0,0,0
603	0.02	0.03	0.02	124,126,139	0.0	0.0	0.0	0,0,0
604	0.02	0.02	0.03	130,126,139	0.0	0.0	0.0	0,0,0
605	0.02	0.03	0.02	130,126,139	0.0	0.0	0.0	0,0,0
606	0.01	0.04	0.02	130,126,139	0.0	0.0	0.0	0,0,0
607	0.01	0.03	0.02	130,126,139	0.0	0.0	0.0	0,0,0
608	0.01	0.03	0.02	130,126,139	0.0	0.0	0.0	0,0,0
609	0.01	0.03	0.02	130,126,139	0.0	0.0	0.0	0,0,0
610	0.01	0.03	0.02	130,126,139	0.0	0.0	0.0	0,0,0
611	0.01	0.03	0.02	130,126,139	0.0	0.0	0.0	0,0,0
612	0.01	0.03	0.02	130,126,139	0.0	0.0	0.0	0,0,0
613	0.01	0.03	0.02	130,126,139	0.0	0.0	0.0	0,0,0
614	0.01	0.02	0.02	130,126,139	0.0	0.0	0.0	0,0,0
615	0.01	0.02	0.02	130,126,139	0.0	0.0	0.0	0,0,0
616	0.01	0.03	0.02	130,126,139	0.0	0.0	0.0	0,0,0
617	0.01	0.03	0.02	130,126,139	0.0	0.0	0.0	0,0,0
618	0.01	0.03	0.02	130,126,139	0.0	0.0	0.0	0,0,0
619	0.01	0.03	0.02	130,126,139	0.0	0.0	0.0	0,0,0
620	0.01	0.03	0.02	130,126,139	0.0	0.0	0.0	0,0,0
621	0.01	0.03	0.02	130,126,139	0.0	0.0	0.0	0,0,0
622	0.01	0.03	0.02	130,126,139	0.0	0.0	0.0	0,0,0
623	0.01	0.04	0.02	130,126,139	0.0	0.0	0.0	0,0,0
624	0.02	0.04	0.02	130,126,139	0.0	0.0	0.0	0,0,0
625	0.02	0.03	0.02	130,126,139	0.0	0.0	0.0	0,0,0
626	0.02	0.02	0.03	130,126,139	0.0	0.0	0.0	0,0,0

627	0.02	0.01	0.03	126,126,138	0.0	0.0	0.0	0,0,0
628	0.01	0.03	0.02	126,126,138	0.0	0.0	0.0	0,0,0
629	0.01	0.03	0.02	126,126,138	0.0	0.0	0.0	0,0,0
630	0.01	0.03	0.02	126,126,138	0.0	0.0	0.0	0,0,0
631	0.01	0.03	0.02	126,126,138	0.0	0.0	0.0	0,0,0
632	0.01	0.02	0.02	126,126,138	0.0	0.0	0.0	0,0,0
633	0.01	0.02	0.02	126,126,138	0.0	0.0	0.0	0,0,0
634	0.01	0.03	0.02	126,126,138	0.0	0.0	0.0	0,0,0
635	0.01	0.02	0.02	126,126,138	0.0	0.0	0.0	0,0,0
636	0.01	0.02	0.02	126,126,138	0.0	0.0	0.0	0,0,0
637	0.01	0.02	0.02	126,126,138	0.0	0.0	0.0	0,0,0
638	0.01	0.02	0.02	126,126,138	0.0	0.0	0.0	0,0,0
639	0.01	0.02	0.02	126,126,138	0.0	0.0	0.0	0,0,0
640	0.01	0.02	0.02	126,126,138	0.0	0.0	0.0	0,0,0
641	0.01	0.03	0.02	126,126,138	0.0	0.0	0.0	0,0,0
642	0.01	0.03	0.02	126,126,138	0.0	0.0	0.0	0,0,0
643	0.01	0.03	0.02	126,126,138	0.0	0.0	0.0	0,0,0
644	0.01	0.02	0.02	126,126,138	0.0	0.0	0.0	0,0,0
645	0.01	0.03	0.02	126,126,138	0.0	0.0	0.0	0,0,0
646	0.01	0.03	0.02	126,126,138	0.0	0.0	0.0	0,0,0
647	0.01	0.03	0.02	126,126,138	0.0	0.0	0.0	0,0,0
648	0.01	0.03	0.02	126,126,138	0.0	0.0	0.0	0,0,0
649	0.02	0.01	0.03	126,126,138	0.0	0.0	0.0	0,0,0
650	0.05	0.03	0.07	126,121,138	0.0	0.0	0.0	0,0,0
651	0.02	0.02	0.02	126,121,138	0.0	0.0	0.0	0,0,0
652	0.02	0.01	0.02	126,121,138	0.0	0.0	0.0	0,0,0
653	0.02	0.01	0.02	126,126,138	0.0	0.0	0.0	0,0,0
654	0.02	0.01	0.02	126,126,138	0.0	0.0	0.0	0,0,0
655	0.02	0.01	0.02	126,126,138	0.0	0.0	0.0	0,0,0
656	0.02	0.01	0.02	126,126,138	0.0	0.0	0.0	0,0,0
657	0.02	0.01	0.02	126,126,138	0.0	0.0	0.0	0,0,0
658	0.02	0.01	0.02	126,126,138	0.0	0.0	0.0	0,0,0
659	0.02	0.01	0.02	126,126,138	0.0	0.0	0.0	0,0,0
660	0.02	0.01	0.02	126,126,138	0.0	0.0	0.0	0,0,0
661	0.02	0.01	0.02	126,126,138	0.0	0.0	0.0	0,0,0
662	0.02	0.01	0.02	126,126,138	0.0	0.0	0.0	0,0,0
663	0.02	0.01	0.02	126,126,138	0.0	0.0	0.0	0,0,0
664	0.02	0.01	0.02	126,126,138	0.0	0.0	0.0	0,0,0
665	0.02	0.01	0.02	126,126,138	0.0	0.0	0.0	0,0,0
666	0.02	0.01	0.02	126,126,138	0.0	0.0	0.0	0,0,0
667	0.02	0.01	0.02	126,126,138	0.0	0.0	0.0	0,0,0
668	0.02	0.01	0.02	126,126,138	0.0	0.0	0.0	0,0,0
669	0.02	0.01	0.02	126,126,138	0.0	0.0	0.0	0,0,0
670	0.02	0.01	0.02	126,121,138	0.0	0.0	0.0	0,0,0
671	0.02	0.02	0.02	126,121,138	0.0	0.0	0.0	0,0,0
672	0.05	0.03	0.07	126,126,138	0.0	0.0	0.0	0,0,0
673	0.05	0.03	0.07	126,126,138	0.0	0.0	0.0	0,0,0
674	0.03	0.04	0.04	126,126,138	0.0	0.0	0.0	0,0,0
675	0.03	0.02	0.04	126,126,138	0.0	0.0	0.0	0,0,0
676	0.03	0.03	0.04	126,126,138	0.0	0.0	0.0	0,0,0
677	0.03	0.02	0.04	126,126,138	0.0	0.0	0.0	0,0,0
678	0.03	0.03	0.04	126,126,138	0.0	0.0	0.0	0,0,0
679	0.03	0.02	0.04	126,126,138	0.0	0.0	0.0	0,0,0
680	0.03	0.03	0.04	126,126,138	0.0	0.0	0.0	0,0,0
681	0.03	0.02	0.04	126,126,138	0.0	0.0	0.0	0,0,0
682	0.03	0.03	0.04	126,126,138	0.0	0.0	0.0	0,0,0
683	0.03	0.02	0.04	126,126,138	0.0	0.0	0.0	0,0,0
684	0.03	0.03	0.04	126,126,138	0.0	0.0	0.0	0,0,0
685	0.03	0.02	0.04	126,126,138	0.0	0.0	0.0	0,0,0
686	0.03	0.03	0.04	126,126,138	0.0	0.0	0.0	0,0,0
687	0.03	0.02	0.04	126,126,138	0.0	0.0	0.0	0,0,0
688	0.03	0.03	0.04	126,126,138	0.0	0.0	0.0	0,0,0
689	0.03	0.02	0.04	126,126,138	0.0	0.0	0.0	0,0,0
690	0.03	0.03	0.04	126,126,138	0.0	0.0	0.0	0,0,0
691	0.03	0.02	0.04	126,126,138	0.0	0.0	0.0	0,0,0
692	0.03	0.03	0.04	126,126,138	0.0	0.0	0.0	0,0,0
693	0.03	0.02	0.04	126,126,138	0.0	0.0	0.0	0,0,0
694	0.03	0.02	0.04	126,126,138	0.0	0.0	0.0	0,0,0
695	0.03	0.02	0.04	126,126,138	0.0	0.0	0.0	0,0,0
696	0.03	0.02	0.04	126,126,138	0.0	0.0	0.0	0,0,0
697	0.03	0.03	0.04	126,126,138	0.0	0.0	0.0	0,0,0
698	0.03	0.02	0.04	126,126,138	0.0	0.0	0.0	0,0,0
699	0.03	0.03	0.04	126,126,138	0.0	0.0	0.0	0,0,0
700	0.03	0.02	0.04	126,126,138	0.0	0.0	0.0	0,0,0
701	0.03	0.03	0.04	126,126,138	0.0	0.0	0.0	0,0,0
702	0.03	0.02	0.04	126,126,138	0.0	0.0	0.0	0,0,0
703	0.03	0.03	0.04	126,126,138	0.0	0.0	0.0	0,0,0
704	0.03	0.02	0.04	126,126,138	0.0	0.0	0.0	0,0,0

705	0.03	0.03	0.04	126,126,138	0.0	0.0	0.0	0,0,0
706	0.03	0.02	0.04	126,126,138	0.0	0.0	0.0	0,0,0
707	0.03	0.03	0.04	126,126,138	0.0	0.0	0.0	0,0,0
708	0.03	0.02	0.04	126,126,138	0.0	0.0	0.0	0,0,0
709	0.03	0.03	0.04	126,126,138	0.0	0.0	0.0	0,0,0
710	0.03	0.02	0.04	126,126,138	0.0	0.0	0.0	0,0,0
711	0.03	0.03	0.04	126,126,138	0.0	0.0	0.0	0,0,0
712	0.03	0.02	0.04	126,126,138	0.0	0.0	0.0	0,0,0
713	0.03	0.03	0.04	126,126,138	0.0	0.0	0.0	0,0,0
714	0.03	0.02	0.04	126,126,138	0.0	0.0	0.0	0,0,0
715	0.03	0.04	0.04	126,126,138	0.0	0.0	0.0	0,0,0
716	0.05	0.03	0.07	126,126,138	0.0	0.0	0.0	0,0,0
717	0.03	0.02	0.04	126,126,138	0.0	0.0	0.0	0,0,0
718	0.04	0.03	0.05	126,126,138	0.0	0.0	0.0	0,0,0
719	0.04	0.03	0.06	126,126,138	0.0	0.0	0.0	0,0,0
720	0.04	0.03	0.06	126,126,138	0.0	0.0	0.0	0,0,0
721	0.03	0.02	0.04	126,126,138	0.0	0.0	0.0	0,0,0
722	0.03	0.02	0.04	126,126,138	0.0	0.0	0.0	0,0,0
723	0.04	0.02	0.05	126,126,138	0.0	0.0	0.0	0,0,0
724	0.04	0.03	0.06	126,126,138	0.0	0.0	0.0	0,0,0
725	0.04	0.03	0.06	126,126,138	0.0	0.0	0.0	0,0,0
726	0.04	0.02	0.05	126,126,138	0.0	0.0	0.0	0,0,0
727	0.04	0.02	0.05	126,126,138	0.0	0.0	0.0	0,0,0
728	0.04	0.02	0.05	126,126,138	0.0	0.0	0.0	0,0,0
729	0.04	0.03	0.06	126,126,138	0.0	0.0	0.0	0,0,0
730	0.05	0.03	0.06	126,126,138	0.0	0.0	0.0	0,0,0
731	0.04	0.03	0.06	126,126,138	0.0	0.0	0.0	0,0,0
732	0.04	0.02	0.05	126,126,138	0.0	0.0	0.0	0,0,0
733	0.04	0.02	0.05	126,126,138	0.0	0.0	0.0	0,0,0
734	0.04	0.02	0.05	126,126,138	0.0	0.0	0.0	0,0,0
735	0.05	0.03	0.06	126,126,138	0.0	0.0	0.0	0,0,0
736	0.05	0.03	0.06	126,126,138	0.0	0.0	0.0	0,0,0
737	0.04	0.03	0.06	126,126,138	0.0	0.0	0.0	0,0,0
738	0.04	0.02	0.05	126,126,138	0.0	0.0	0.0	0,0,0
739	0.04	0.02	0.05	126,126,138	0.0	0.0	0.0	0,0,0
740	0.04	0.02	0.05	126,126,138	0.0	0.0	0.0	0,0,0
741	0.04	0.03	0.06	126,126,138	0.0	0.0	0.0	0,0,0
742	0.04	0.03	0.06	126,126,138	0.0	0.0	0.0	0,0,0
743	0.04	0.02	0.05	126,126,138	0.0	0.0	0.0	0,0,0
744	0.03	0.02	0.04	126,126,138	0.0	0.0	0.0	0,0,0
745	0.02	9.52e-03	0.02	126,126,138	0.0	0.0	0.0	0,0,0
746	0.02	0.01	0.03	126,126,138	0.0	0.0	0.0	0,0,0
747	0.02	0.01	0.03	126,126,138	0.0	0.0	0.0	0,0,0
748	0.02	0.01	0.03	126,126,138	0.0	0.0	0.0	0,0,0
749	0.02	0.01	0.02	126,126,138	0.0	0.0	0.0	0,0,0
750	0.02	0.01	0.02	126,126,138	0.0	0.0	0.0	0,0,0
751	0.02	0.01	0.02	126,126,138	0.0	0.0	0.0	0,0,0
752	0.02	0.01	0.03	126,126,138	0.0	0.0	0.0	0,0,0
753	0.02	0.01	0.03	126,126,138	0.0	0.0	0.0	0,0,0
754	0.02	0.01	0.03	126,126,138	0.0	0.0	0.0	0,0,0
755	0.02	0.01	0.02	126,126,138	0.0	0.0	0.0	0,0,0
756	0.02	0.01	0.02	126,126,138	0.0	0.0	0.0	0,0,0
757	0.02	0.01	0.02	126,126,138	0.0	0.0	0.0	0,0,0
758	0.02	0.01	0.03	126,126,138	0.0	0.0	0.0	0,0,0
759	0.02	0.01	0.03	126,126,138	0.0	0.0	0.0	0,0,0
760	0.02	0.01	0.03	126,126,138	0.0	0.0	0.0	0,0,0
761	0.02	0.01	0.02	126,126,138	0.0	0.0	0.0	0,0,0
762	0.02	0.01	0.02	126,126,138	0.0	0.0	0.0	0,0,0
763	0.02	0.01	0.03	126,126,138	0.0	0.0	0.0	0,0,0
764	0.02	0.01	0.03	126,126,138	0.0	0.0	0.0	0,0,0
765	0.02	0.01	0.03	126,126,138	0.0	0.0	0.0	0,0,0
766	0.02	0.01	0.03	126,126,138	0.0	0.0	0.0	0,0,0
767	0.02	9.50e-03	0.02	126,126,138	0.0	0.0	0.0	0,0,0
768	0.01	7.74e-03	0.02	130,130,139	0.0	0.0	0.0	0,0,0
769	0.01	7.70e-03	0.02	130,130,139	0.0	0.0	0.0	0,0,0
770	0.01	7.65e-03	0.02	130,130,139	0.0	0.0	0.0	0,0,0
771	0.01	7.53e-03	0.02	130,130,139	0.0	0.0	0.0	0,0,0
772	0.01	7.34e-03	0.02	130,130,139	0.0	0.0	0.0	0,0,0
773	0.01	7.17e-03	0.02	130,130,139	0.0	0.0	0.0	0,0,0
774	0.01	7.10e-03	0.01	130,130,139	0.0	0.0	0.0	0,0,0
775	0.01	7.21e-03	0.02	130,130,139	0.0	0.0	0.0	0,0,0
776	0.01	7.28e-03	0.02	130,130,139	0.0	0.0	0.0	0,0,0
777	0.01	7.18e-03	0.01	130,130,139	0.0	0.0	0.0	0,0,0
778	0.01	7.04e-03	0.01	130,130,139	0.0	0.0	0.0	0,0,0
779	0.01	6.91e-03	0.01	130,130,139	0.0	0.0	0.0	0,0,0
780	0.01	7.05e-03	0.01	130,130,139	0.0	0.0	0.0	0,0,0
781	0.01	7.19e-03	0.01	130,130,139	0.0	0.0	0.0	0,0,0
782	0.01	7.28e-03	0.02	130,130,139	0.0	0.0	0.0	0,0,0

783	0.01	7.37e-03	0.02	130,130,139	0.0	0.0	0.0	0,0,0
784	0.01	7.28e-03	0.02	130,130,139	0.0	0.0	0.0	0,0,0
785	0.01	7.21e-03	0.02	130,130,139	0.0	0.0	0.0	0,0,0
786	0.01	7.39e-03	0.02	130,130,139	0.0	0.0	0.0	0,0,0
787	0.01	7.58e-03	0.02	130,130,139	0.0	0.0	0.0	0,0,0
788	0.01	7.70e-03	0.02	130,130,139	0.0	0.0	0.0	0,0,0
789	0.01	7.74e-03	0.02	130,130,139	0.0	0.0	0.0	0,0,0
790	0.01	7.83e-03	0.02	130,130,139	0.0	0.0	0.0	0,0,0
791	0.02	9.10e-03	0.02	126,126,138	0.0	0.0	0.0	0,0,0
792	0.01	6.63e-03	0.01	130,130,139	0.0	0.0	0.0	0,0,0
793	0.01	6.62e-03	0.01	130,130,139	0.0	0.0	0.0	0,0,0
794	0.01	6.51e-03	0.01	130,130,139	0.0	0.0	0.0	0,0,0
795	0.01	6.56e-03	0.01	130,130,139	0.0	0.0	0.0	0,0,0
796	0.01	6.56e-03	0.01	130,130,139	0.0	0.0	0.0	0,0,0
797	0.01	6.54e-03	0.01	130,130,139	0.0	0.0	0.0	0,0,0
798	0.01	6.48e-03	0.01	130,130,139	0.0	0.0	0.0	0,0,0
799	0.01	6.46e-03	0.01	130,130,139	0.0	0.0	0.0	0,0,0
800	0.01	6.45e-03	0.01	130,130,139	0.0	0.0	0.0	0,0,0
801	0.01	6.50e-03	0.01	130,130,139	0.0	0.0	0.0	0,0,0
802	0.01	6.50e-03	0.01	130,130,139	0.0	0.0	0.0	0,0,0
803	0.01	6.51e-03	0.01	130,130,139	0.0	0.0	0.0	0,0,0
804	0.01	6.46e-03	0.01	130,130,139	0.0	0.0	0.0	0,0,0
805	0.01	6.47e-03	0.01	130,130,139	0.0	0.0	0.0	0,0,0
806	0.01	6.48e-03	0.01	130,130,139	0.0	0.0	0.0	0,0,0
807	0.01	6.54e-03	0.01	130,130,139	0.0	0.0	0.0	0,0,0
808	0.01	6.55e-03	0.01	130,130,139	0.0	0.0	0.0	0,0,0
809	0.01	6.62e-03	0.01	130,124,139	0.0	0.0	0.0	0,0,0
810	0.01	6.65e-03	0.01	130,130,139	0.0	0.0	0.0	0,0,0
811	0.01	6.64e-03	0.01	130,130,139	0.0	0.0	0.0	0,0,0
812	0.01	6.65e-03	0.02	130,130,139	0.0	0.0	0.0	0,0,0
813	0.02	9.17e-03	0.02	126,126,138	0.0	0.0	0.0	0,0,0
814	0.02	0.01	0.03	126,126,138	0.0	0.0	0.0	0,0,0
815	0.01	9.33e-03	0.02	126,126,138	0.0	0.0	0.0	0,0,0
816	0.01	9.62e-03	0.02	126,126,138	0.0	0.0	0.0	0,0,0
817	0.01	0.01	0.02	126,126,138	0.0	0.0	0.0	0,0,0
818	0.01	9.58e-03	0.02	126,126,138	0.0	0.0	0.0	0,0,0
819	0.01	8.32e-03	0.02	126,126,138	0.0	0.0	0.0	0,0,0
820	0.01	8.15e-03	0.02	126,126,138	0.0	0.0	0.0	0,0,0
821	0.01	8.58e-03	0.02	126,126,138	0.0	0.0	0.0	0,0,0
822	0.01	8.93e-03	0.02	126,126,138	0.0	0.0	0.0	0,0,0
823	0.01	8.71e-03	0.02	126,126,138	0.0	0.0	0.0	0,0,0
824	0.01	7.80e-03	0.02	126,126,138	0.0	0.0	0.0	0,0,0
825	0.01	7.77e-03	0.02	126,126,138	0.0	0.0	0.0	0,0,0
826	0.01	7.82e-03	0.02	126,126,138	0.0	0.0	0.0	0,0,0
827	0.01	9.12e-03	0.02	126,126,138	0.0	0.0	0.0	0,0,0
828	0.01	9.35e-03	0.02	126,126,138	0.0	0.0	0.0	0,0,0
829	0.01	8.95e-03	0.02	126,126,138	0.0	0.0	0.0	0,0,0
830	0.01	8.46e-03	0.02	126,126,138	0.0	0.0	0.0	0,0,0
831	0.01	8.56e-03	0.02	126,126,138	0.0	0.0	0.0	0,0,0
832	0.01	9.78e-03	0.02	126,126,138	0.0	0.0	0.0	0,0,0
833	0.01	0.01	0.02	126,126,138	0.0	0.0	0.0	0,0,0
834	0.01	9.78e-03	0.02	126,126,138	0.0	0.0	0.0	0,0,0
835	0.01	9.71e-03	0.02	126,126,138	0.0	0.0	0.0	0,0,0
836	0.02	0.01	0.03	126,126,138	0.0	0.0	0.0	0,0,0
837	0.02	0.02	0.03	126,130,138	0.0	0.0	0.0	0,0,0
838	0.02	0.02	0.02	126,126,138	0.0	0.0	0.0	0,0,0
839	0.01	8.01e-03	0.02	126,126,138	0.0	0.0	0.0	0,0,0
840	0.01	0.01	0.02	126,126,138	0.0	0.0	0.0	0,0,0
841	0.01	9.36e-03	0.02	126,130,138	0.0	0.0	0.0	0,0,0
842	0.01	0.01	0.02	126,126,138	0.0	0.0	0.0	0,0,0
843	0.01	9.72e-03	0.02	126,130,138	0.0	0.0	0.0	0,0,0
844	0.01	0.01	0.02	126,126,138	0.0	0.0	0.0	0,0,0
845	0.01	0.01	0.02	126,130,138	0.0	0.0	0.0	0,0,0
846	0.01	0.01	0.02	126,126,138	0.0	0.0	0.0	0,0,0
847	0.01	0.01	0.02	126,130,138	0.0	0.0	0.0	0,0,0
848	0.01	0.01	0.02	126,126,138	0.0	0.0	0.0	0,0,0
849	0.01	0.01	0.02	126,130,138	0.0	0.0	0.0	0,0,0
850	0.01	0.01	0.02	126,126,138	0.0	0.0	0.0	0,0,0
851	0.01	0.01	0.02	126,130,138	0.0	0.0	0.0	0,0,0
852	0.01	0.01	0.02	126,126,138	0.0	0.0	0.0	0,0,0
853	0.01	0.01	0.02	126,126,138	0.0	0.0	0.0	0,0,0
854	0.01	0.01	0.02	126,126,138	0.0	0.0	0.0	0,0,0
855	0.01	0.01	0.02	126,126,138	0.0	0.0	0.0	0,0,0
856	0.01	0.01	0.02	126,126,138	0.0	0.0	0.0	0,0,0
857	0.01	9.92e-03	0.02	126,126,138	0.0	0.0	0.0	0,0,0
858	0.01	9.90e-03	0.02	126,126,138	0.0	0.0	0.0	0,0,0
859	0.01	9.86e-03	0.02	126,126,138	0.0	0.0	0.0	0,0,0
860	0.01	9.95e-03	0.02	126,126,138	0.0	0.0	0.0	0,0,0

861	0.01	9.97e-03	0.02	126,126,138	0.0	0.0	0.0	0,0,0
862	0.01	0.01	0.02	126,126,138	0.0	0.0	0.0	0,0,0
863	0.01	0.01	0.02	126,126,138	0.0	0.0	0.0	0,0,0
864	0.01	0.01	0.02	126,126,138	0.0	0.0	0.0	0,0,0
865	0.01	0.01	0.02	126,126,138	0.0	0.0	0.0	0,0,0
866	0.01	0.01	0.02	126,130,138	0.0	0.0	0.0	0,0,0
867	0.01	0.01	0.02	126,126,138	0.0	0.0	0.0	0,0,0
868	0.01	0.01	0.02	126,130,138	0.0	0.0	0.0	0,0,0
869	0.01	0.01	0.02	126,126,138	0.0	0.0	0.0	0,0,0
870	0.01	0.01	0.02	126,130,138	0.0	0.0	0.0	0,0,0
871	0.01	0.01	0.02	126,126,138	0.0	0.0	0.0	0,0,0
872	0.01	9.57e-03	0.02	126,130,138	0.0	0.0	0.0	0,0,0
873	0.01	0.01	0.02	126,126,138	0.0	0.0	0.0	0,0,0
874	0.01	9.16e-03	0.02	126,130,138	0.0	0.0	0.0	0,0,0
875	0.01	0.01	0.02	126,126,138	0.0	0.0	0.0	0,0,0
876	0.01	8.82e-03	0.02	126,130,138	0.0	0.0	0.0	0,0,0
877	0.01	0.01	0.02	126,126,138	0.0	0.0	0.0	0,0,0
878	0.01	7.99e-03	0.02	126,126,138	0.0	0.0	0.0	0,0,0
879	0.02	0.02	0.02	126,126,138	0.0	0.0	0.0	0,0,0
880	0.02	0.02	0.03	126,130,138	0.0	0.0	0.0	0,0,0
881	0.02	0.01	0.03	126,126,138	0.0	0.0	0.0	0,0,0
882	0.03	0.02	0.04	126,126,138	0.0	0.0	0.0	0,0,0
883	0.03	0.02	0.03	126,126,138	0.0	0.0	0.0	0,0,0
884	0.03	0.02	0.04	126,126,138	0.0	0.0	0.0	0,0,0
885	0.02	0.01	0.03	126,126,138	0.0	0.0	0.0	0,0,0
886	0.02	0.01	0.03	126,126,138	0.0	0.0	0.0	0,0,0
887	0.03	0.02	0.04	126,126,138	0.0	0.0	0.0	0,0,0
888	0.03	0.02	0.04	126,126,138	0.0	0.0	0.0	0,0,0
889	0.03	0.02	0.04	126,126,138	0.0	0.0	0.0	0,0,0
890	0.03	0.02	0.04	126,126,138	0.0	0.0	0.0	0,0,0
891	0.03	0.02	0.03	126,126,138	0.0	0.0	0.0	0,0,0
892	0.03	0.02	0.03	126,126,138	0.0	0.0	0.0	0,0,0
893	0.03	0.02	0.04	126,126,138	0.0	0.0	0.0	0,0,0
894	0.03	0.02	0.04	126,126,138	0.0	0.0	0.0	0,0,0
895	0.03	0.02	0.04	126,126,138	0.0	0.0	0.0	0,0,0
896	0.03	0.02	0.04	126,126,138	0.0	0.0	0.0	0,0,0
897	0.03	0.02	0.03	126,126,138	0.0	0.0	0.0	0,0,0
898	0.03	0.02	0.04	126,126,138	0.0	0.0	0.0	0,0,0
899	0.03	0.02	0.04	126,126,138	0.0	0.0	0.0	0,0,0
900	0.03	0.02	0.04	126,126,138	0.0	0.0	0.0	0,0,0
901	0.03	0.02	0.04	126,126,138	0.0	0.0	0.0	0,0,0
902	0.03	0.02	0.03	126,126,138	0.0	0.0	0.0	0,0,0
903	0.03	0.02	0.03	126,126,138	0.0	0.0	0.0	0,0,0
904	0.03	0.02	0.04	126,126,138	0.0	0.0	0.0	0,0,0
905	0.03	0.02	0.04	126,126,138	0.0	0.0	0.0	0,0,0
906	0.03	0.02	0.04	126,126,138	0.0	0.0	0.0	0,0,0
907	0.03	0.02	0.04	126,126,138	0.0	0.0	0.0	0,0,0
908	0.02	0.01	0.03	126,126,138	0.0	0.0	0.0	0,0,0
909	0.02	0.01	0.02	126,126,138	0.0	0.0	0.0	0,0,0
910	0.02	0.01	0.03	126,126,138	0.0	0.0	0.0	0,0,0
911	0.02	0.01	0.03	126,126,138	0.0	0.0	0.0	0,0,0
912	0.02	0.01	0.03	126,126,138	0.0	0.0	0.0	0,0,0
913	0.02	0.01	0.03	126,126,138	0.0	0.0	0.0	0,0,0
914	0.02	0.01	0.03	126,126,138	0.0	0.0	0.0	0,0,0
915	0.02	0.01	0.03	126,126,138	0.0	0.0	0.0	0,0,0
916	0.02	0.01	0.03	126,126,138	0.0	0.0	0.0	0,0,0
917	0.02	0.01	0.03	126,126,138	0.0	0.0	0.0	0,0,0
918	0.02	0.01	0.03	126,126,138	0.0	0.0	0.0	0,0,0
919	0.02	0.01	0.02	126,126,138	0.0	0.0	0.0	0,0,0
920	0.02	0.01	0.02	126,126,138	0.0	0.0	0.0	0,0,0
921	0.02	0.01	0.02	126,126,138	0.0	0.0	0.0	0,0,0
922	0.02	0.01	0.03	126,126,138	0.0	0.0	0.0	0,0,0
923	0.02	0.01	0.03	126,126,138	0.0	0.0	0.0	0,0,0
924	0.02	0.01	0.03	126,126,138	0.0	0.0	0.0	0,0,0
925	0.02	0.01	0.03	126,126,138	0.0	0.0	0.0	0,0,0
926	0.02	0.01	0.03	126,126,138	0.0	0.0	0.0	0,0,0
927	0.02	0.01	0.03	126,126,138	0.0	0.0	0.0	0,0,0
928	0.02	0.01	0.03	126,126,138	0.0	0.0	0.0	0,0,0
929	0.02	0.01	0.03	126,126,138	0.0	0.0	0.0	0,0,0
930	0.02	0.01	0.03	126,126,138	0.0	0.0	0.0	0,0,0
931	0.02	0.01	0.03	126,126,138	0.0	0.0	0.0	0,0,0
932	0.02	9.13e-03	0.02	130,130,139	0.0	0.0	0.0	0,0,0
933	0.02	9.58e-03	0.02	130,130,139	0.0	0.0	0.0	0,0,0
934	0.02	9.54e-03	0.02	130,130,139	0.0	0.0	0.0	0,0,0
935	0.02	9.34e-03	0.02	130,130,139	0.0	0.0	0.0	0,0,0
936	0.02	8.93e-03	0.02	130,130,139	0.0	0.0	0.0	0,0,0
937	0.01	8.55e-03	0.02	130,130,139	0.0	0.0	0.0	0,0,0
938	0.01	8.59e-03	0.02	130,130,139	0.0	0.0	0.0	0,0,0

939	0.01	8.80e-03	0.02	130,130,139	0.0	0.0	0.0	0,0,0
940	0.01	8.87e-03	0.02	130,130,139	0.0	0.0	0.0	0,0,0
941	0.01	8.59e-03	0.02	130,130,139	0.0	0.0	0.0	0,0,0
942	0.01	7.99e-03	0.02	130,130,139	0.0	0.0	0.0	0,0,0
943	0.01	7.77e-03	0.02	130,130,139	0.0	0.0	0.0	0,0,0
944	0.01	8.30e-03	0.02	130,130,139	0.0	0.0	0.0	0,0,0
945	0.01	8.80e-03	0.02	130,130,139	0.0	0.0	0.0	0,0,0
946	0.02	9.08e-03	0.02	130,130,139	0.0	0.0	0.0	0,0,0
947	0.02	9.02e-03	0.02	130,130,139	0.0	0.0	0.0	0,0,0
948	0.02	8.81e-03	0.02	130,130,139	0.0	0.0	0.0	0,0,0
949	0.02	8.76e-03	0.02	130,130,139	0.0	0.0	0.0	0,0,0
950	0.02	9.14e-03	0.02	130,130,139	0.0	0.0	0.0	0,0,0
951	0.02	9.55e-03	0.02	130,130,139	0.0	0.0	0.0	0,0,0
952	0.02	9.73e-03	0.02	130,130,139	0.0	0.0	0.0	0,0,0
953	0.02	9.75e-03	0.02	130,130,139	0.0	0.0	0.0	0,0,0
954	0.02	9.26e-03	0.02	130,130,139	0.0	0.0	0.0	0,0,0
955	0.02	9.08e-03	0.02	130,130,139	0.0	0.0	0.0	0,0,0
956	0.01	8.11e-03	0.02	130,130,139	0.0	0.0	0.0	0,0,0
957	0.01	7.84e-03	0.02	130,130,139	0.0	0.0	0.0	0,0,0
958	0.01	7.73e-03	0.02	130,130,139	0.0	0.0	0.0	0,0,0
959	0.01	7.62e-03	0.02	130,130,139	0.0	0.0	0.0	0,0,0
960	0.01	7.47e-03	0.02	130,130,139	0.0	0.0	0.0	0,0,0
961	0.01	7.38e-03	0.02	130,130,139	0.0	0.0	0.0	0,0,0
962	0.01	7.28e-03	0.02	130,130,139	0.0	0.0	0.0	0,0,0
963	0.01	7.19e-03	0.02	130,130,139	0.0	0.0	0.0	0,0,0
964	0.01	7.06e-03	0.02	130,130,139	0.0	0.0	0.0	0,0,0
965	0.01	6.88e-03	0.01	130,130,139	0.0	0.0	0.0	0,0,0
966	0.01	6.85e-03	0.01	130,130,139	0.0	0.0	0.0	0,0,0
967	0.01	7.06e-03	0.02	130,130,139	0.0	0.0	0.0	0,0,0
968	0.01	7.18e-03	0.02	130,130,139	0.0	0.0	0.0	0,0,0
969	0.01	7.32e-03	0.02	130,130,139	0.0	0.0	0.0	0,0,0
970	0.01	7.41e-03	0.02	130,130,139	0.0	0.0	0.0	0,0,0
971	0.01	7.51e-03	0.02	130,130,139	0.0	0.0	0.0	0,0,0
972	0.01	7.59e-03	0.02	130,130,139	0.0	0.0	0.0	0,0,0
973	0.01	7.74e-03	0.02	130,130,139	0.0	0.0	0.0	0,0,0
974	0.01	7.85e-03	0.02	130,130,139	0.0	0.0	0.0	0,0,0
975	0.01	7.96e-03	0.02	130,130,139	0.0	0.0	0.0	0,0,0
976	0.02	8.22e-03	0.02	130,130,139	0.0	0.0	0.0	0,0,0
977	0.02	9.19e-03	0.02	130,130,139	0.0	0.0	0.0	0,0,0
978	0.02	0.01	0.02	130,126,139	0.0	0.0	0.0	0,0,0
979	0.01	0.02	0.02	126,126,138	0.0	0.0	0.0	0,0,0
980	0.01	0.01	0.02	126,126,138	0.0	0.0	0.0	0,0,0
981	0.01	0.01	0.02	126,126,138	0.0	0.0	0.0	0,0,0
982	0.01	0.01	0.02	126,126,138	0.0	0.0	0.0	0,0,0
983	0.01	0.01	0.02	126,126,138	0.0	0.0	0.0	0,0,0
984	0.01	0.01	0.02	126,126,138	0.0	0.0	0.0	0,0,0
985	0.01	0.01	0.02	126,126,138	0.0	0.0	0.0	0,0,0
986	0.01	0.01	0.01	126,126,138	0.0	0.0	0.0	0,0,0
987	0.01	0.01	0.01	126,126,138	0.0	0.0	0.0	0,0,0
988	0.01	0.01	0.01	126,126,138	0.0	0.0	0.0	0,0,0
989	0.01	0.01	0.01	126,126,138	0.0	0.0	0.0	0,0,0
990	0.01	0.01	0.01	126,126,138	0.0	0.0	0.0	0,0,0
991	0.01	0.01	0.01	126,126,138	0.0	0.0	0.0	0,0,0
992	0.01	0.01	0.02	126,126,138	0.0	0.0	0.0	0,0,0
993	0.01	0.01	0.02	126,126,138	0.0	0.0	0.0	0,0,0
994	0.01	0.01	0.02	126,126,138	0.0	0.0	0.0	0,0,0
995	0.01	0.01	0.02	126,126,138	0.0	0.0	0.0	0,0,0
996	0.01	0.01	0.02	126,126,138	0.0	0.0	0.0	0,0,0
997	0.01	0.01	0.02	126,126,138	0.0	0.0	0.0	0,0,0
998	0.01	0.01	0.02	126,126,138	0.0	0.0	0.0	0,0,0
999	0.01	0.02	0.02	126,126,138	0.0	0.0	0.0	0,0,0
1000	0.02	0.01	0.02	130,126,139	0.0	0.0	0.0	0,0,0
1001	0.02	0.02	0.02	126,130,138	0.0	0.0	0.0	0,0,0
1002	0.02	0.02	0.02	126,126,138	0.0	0.0	0.0	0,0,0
1003	0.01	7.36e-03	0.02	126,126,138	0.0	0.0	0.0	0,0,0
1004	0.01	0.01	0.02	126,126,138	0.0	0.0	0.0	0,0,0
1005	0.01	6.88e-03	0.02	126,126,138	0.0	0.0	0.0	0,0,0
1006	0.01	6.99e-03	0.02	126,126,138	0.0	0.0	0.0	0,0,0
1007	0.01	6.80e-03	0.02	126,126,138	0.0	0.0	0.0	0,0,0
1008	0.01	6.84e-03	0.02	126,126,138	0.0	0.0	0.0	0,0,0
1009	0.01	6.78e-03	0.02	126,126,138	0.0	0.0	0.0	0,0,0
1010	0.01	6.78e-03	0.02	126,126,138	0.0	0.0	0.0	0,0,0
1011	0.01	6.75e-03	0.02	126,126,138	0.0	0.0	0.0	0,0,0
1012	0.01	6.69e-03	0.02	126,126,138	0.0	0.0	0.0	0,0,0
1013	0.01	6.63e-03	0.02	126,126,138	0.0	0.0	0.0	0,0,0
1014	0.01	6.56e-03	0.02	126,126,138	0.0	0.0	0.0	0,0,0
1015	0.01	6.55e-03	0.02	126,126,138	0.0	0.0	0.0	0,0,0
1016	0.01	6.50e-03	0.02	126,126,138	0.0	0.0	0.0	0,0,0

1017	0.01	6.52e-03	0.02	126,126,138	0.0	0.0	0.0	0,0,0
1018	0.01	6.49e-03	0.02	126,126,138	0.0	0.0	0.0	0,0,0
1019	0.01	6.53e-03	0.02	126,126,138	0.0	0.0	0.0	0,0,0
1020	0.01	6.51e-03	0.02	126,126,138	0.0	0.0	0.0	0,0,0
1021	0.01	6.58e-03	0.02	126,126,138	0.0	0.0	0.0	0,0,0
1022	0.01	6.58e-03	0.02	126,126,138	0.0	0.0	0.0	0,0,0
1023	0.01	6.58e-03	0.02	126,126,138	0.0	0.0	0.0	0,0,0
1024	0.01	6.58e-03	0.02	126,126,138	0.0	0.0	0.0	0,0,0
1025	0.01	6.51e-03	0.02	126,126,138	0.0	0.0	0.0	0,0,0
1026	0.01	6.53e-03	0.02	126,126,138	0.0	0.0	0.0	0,0,0
1027	0.01	6.48e-03	0.02	126,126,138	0.0	0.0	0.0	0,0,0
1028	0.01	6.52e-03	0.02	126,126,138	0.0	0.0	0.0	0,0,0
1029	0.01	6.50e-03	0.02	126,126,138	0.0	0.0	0.0	0,0,0
1030	0.01	6.55e-03	0.02	126,126,138	0.0	0.0	0.0	0,0,0
1031	0.01	6.56e-03	0.02	126,126,138	0.0	0.0	0.0	0,0,0
1032	0.01	6.63e-03	0.02	126,126,138	0.0	0.0	0.0	0,0,0
1033	0.01	6.70e-03	0.02	126,126,138	0.0	0.0	0.0	0,0,0
1034	0.01	6.75e-03	0.02	126,126,138	0.0	0.0	0.0	0,0,0
1035	0.01	6.79e-03	0.02	126,126,138	0.0	0.0	0.0	0,0,0
1036	0.01	6.79e-03	0.02	126,126,138	0.0	0.0	0.0	0,0,0
1037	0.01	6.84e-03	0.02	126,126,138	0.0	0.0	0.0	0,0,0
1038	0.01	6.80e-03	0.02	126,126,138	0.0	0.0	0.0	0,0,0
1039	0.01	6.99e-03	0.02	126,126,138	0.0	0.0	0.0	0,0,0
1040	0.01	6.87e-03	0.02	126,126,138	0.0	0.0	0.0	0,0,0
1041	0.01	9.05e-03	0.02	126,126,138	0.0	0.0	0.0	0,0,0
1042	0.01	7.36e-03	0.02	126,126,138	0.0	0.0	0.0	0,0,0
1043	0.02	0.02	0.02	126,126,138	0.0	0.0	0.0	0,0,0
1044	0.02	0.02	0.02	126,130,138	0.0	0.0	0.0	0,0,0
1265	0.02	0.01	0.03	126,126,138	0.0	0.0	0.0	0,0,0
1266	0.02	0.02	0.03	126,126,138	0.0	0.0	0.0	0,0,0
1267	0.02	0.01	0.03	126,126,138	0.0	0.0	0.0	0,0,0
1268	0.02	0.02	0.03	126,126,138	0.0	0.0	0.0	0,0,0
1269	0.02	0.01	0.03	126,126,138	0.0	0.0	0.0	0,0,0
1270	0.02	0.01	0.03	126,126,138	0.0	0.0	0.0	0,0,0
1271	0.03	0.01	0.03	126,126,138	0.0	0.0	0.0	0,0,0
1272	0.03	0.02	0.03	126,126,138	0.0	0.0	0.0	0,0,0
1273	0.03	0.02	0.03	126,126,138	0.0	0.0	0.0	0,0,0
1274	0.02	0.01	0.03	126,126,138	0.0	0.0	0.0	0,0,0
1275	0.02	0.01	0.03	126,126,138	0.0	0.0	0.0	0,0,0
1276	0.02	0.01	0.03	126,126,138	0.0	0.0	0.0	0,0,0
1277	0.02	0.01	0.03	126,126,138	0.0	0.0	0.0	0,0,0
1278	0.03	0.02	0.03	126,126,138	0.0	0.0	0.0	0,0,0
1279	0.02	0.01	0.03	126,126,138	0.0	0.0	0.0	0,0,0
1280	0.02	0.01	0.03	126,126,138	0.0	0.0	0.0	0,0,0
1281	0.02	0.01	0.03	126,126,138	0.0	0.0	0.0	0,0,0
1282	0.02	0.01	0.03	126,126,138	0.0	0.0	0.0	0,0,0
1283	0.02	0.01	0.03	126,126,138	0.0	0.0	0.0	0,0,0
1284	0.03	0.02	0.03	126,126,138	0.0	0.0	0.0	0,0,0
1285	0.03	0.02	0.03	126,126,138	0.0	0.0	0.0	0,0,0
1286	0.02	0.01	0.03	126,126,138	0.0	0.0	0.0	0,0,0
1287	0.02	0.01	0.03	126,126,138	0.0	0.0	0.0	0,0,0
1288	0.03	0.01	0.03	126,126,138	0.0	0.0	0.0	0,0,0
1289	0.03	0.02	0.03	126,126,138	0.0	0.0	0.0	0,0,0
1290	0.03	0.02	0.04	126,126,138	0.0	0.0	0.0	0,0,0
1291	0.03	0.01	0.03	126,126,138	0.0	0.0	0.0	0,0,0
1292	0.02	0.01	0.03	126,126,138	0.0	0.0	0.0	0,0,0
1293	0.02	9.53e-03	0.02	126,126,138	0.0	0.0	0.0	0,0,0
1294	0.02	0.01	0.03	126,126,138	0.0	0.0	0.0	0,0,0
1295	0.02	0.01	0.03	126,126,138	0.0	0.0	0.0	0,0,0
1296	0.02	0.01	0.03	126,126,138	0.0	0.0	0.0	0,0,0
1297	0.02	0.01	0.02	126,126,138	0.0	0.0	0.0	0,0,0
1298	0.02	9.80e-03	0.02	126,126,138	0.0	0.0	0.0	0,0,0
1299	0.02	0.01	0.02	126,126,138	0.0	0.0	0.0	0,0,0
1300	0.02	0.01	0.02	126,126,138	0.0	0.0	0.0	0,0,0
1301	0.02	0.01	0.02	126,126,138	0.0	0.0	0.0	0,0,0
1302	0.02	0.01	0.02	126,126,138	0.0	0.0	0.0	0,0,0
1303	0.02	9.49e-03	0.02	126,126,138	0.0	0.0	0.0	0,0,0
1304	0.01	9.07e-03	0.02	126,126,138	0.0	0.0	0.0	0,0,0
1305	0.02	9.85e-03	0.02	126,126,138	0.0	0.0	0.0	0,0,0
1306	0.02	0.01	0.02	126,126,138	0.0	0.0	0.0	0,0,0
1307	0.02	0.01	0.02	126,126,138	0.0	0.0	0.0	0,0,0
1308	0.02	0.01	0.02	126,126,138	0.0	0.0	0.0	0,0,0
1309	0.02	0.01	0.02	126,126,138	0.0	0.0	0.0	0,0,0
1310	0.02	0.01	0.02	126,126,138	0.0	0.0	0.0	0,0,0
1311	0.02	0.01	0.02	126,126,138	0.0	0.0	0.0	0,0,0
1312	0.02	0.01	0.03	126,126,138	0.0	0.0	0.0	0,0,0
1313	0.02	0.01	0.03	126,126,138	0.0	0.0	0.0	0,0,0
1314	0.02	0.01	0.03	126,126,138	0.0	0.0	0.0	0,0,0

1315	0.02	9.60e-03	0.02	126,126,138	0.0	0.0	0.0	0,0,0
1316	0.02	7.81e-03	0.02	130,130,139	0.0	0.0	0.0	0,0,0
1317	0.02	8.03e-03	0.02	130,130,139	0.0	0.0	0.0	0,0,0
1318	0.01	7.91e-03	0.02	130,130,139	0.0	0.0	0.0	0,0,0
1319	0.01	7.69e-03	0.02	130,130,139	0.0	0.0	0.0	0,0,0
1320	0.01	7.27e-03	0.02	130,130,139	0.0	0.0	0.0	0,0,0
1321	0.01	6.85e-03	0.02	130,130,139	0.0	0.0	0.0	0,0,0
1322	0.01	7.07e-03	0.02	130,130,139	0.0	0.0	0.0	0,0,0
1323	0.01	7.30e-03	0.02	130,130,139	0.0	0.0	0.0	0,0,0
1324	0.01	7.48e-03	0.02	130,130,139	0.0	0.0	0.0	0,0,0
1325	0.01	7.28e-03	0.01	130,130,139	0.0	0.0	0.0	0,0,0
1326	0.01	6.86e-03	0.01	130,130,139	0.0	0.0	0.0	0,0,0
1327	0.01	6.61e-03	0.01	130,130,139	0.0	0.0	0.0	0,0,0
1328	0.01	6.89e-03	0.01	130,130,139	0.0	0.0	0.0	0,0,0
1329	0.01	7.31e-03	0.02	130,130,139	0.0	0.0	0.0	0,0,0
1330	0.01	7.66e-03	0.02	130,130,139	0.0	0.0	0.0	0,0,0
1331	0.01	7.51e-03	0.02	130,130,139	0.0	0.0	0.0	0,0,0
1332	0.01	7.15e-03	0.02	130,130,139	0.0	0.0	0.0	0,0,0
1333	0.01	7.05e-03	0.02	130,130,139	0.0	0.0	0.0	0,0,0
1334	0.01	7.47e-03	0.02	130,130,139	0.0	0.0	0.0	0,0,0
1335	0.01	7.88e-03	0.02	130,130,139	0.0	0.0	0.0	0,0,0
1336	0.01	8.09e-03	0.02	130,130,139	0.0	0.0	0.0	0,0,0
1337	0.02	8.19e-03	0.02	130,130,139	0.0	0.0	0.0	0,0,0
1338	0.02	7.89e-03	0.02	130,130,139	0.0	0.0	0.0	0,0,0
1339	0.01	7.47e-03	0.02	130,130,139	0.0	0.0	0.0	0,0,0
1340	0.01	6.57e-03	0.02	130,130,139	0.0	0.0	0.0	0,0,0
1341	0.01	6.31e-03	0.01	130,130,139	0.0	0.0	0.0	0,0,0
1342	0.01	6.14e-03	0.01	130,130,139	0.0	0.0	0.0	0,0,0
1343	0.01	5.95e-03	0.01	130,130,139	0.0	0.0	0.0	0,0,0
1344	9.99e-03	5.70e-03	0.01	130,130,139	0.0	0.0	0.0	0,0,0
1345	9.70e-03	5.64e-03	0.01	130,130,139	0.0	0.0	0.0	0,0,0
1346	9.56e-03	5.65e-03	0.01	130,130,139	0.0	0.0	0.0	0,0,0
1347	9.29e-03	5.57e-03	0.01	130,130,139	0.0	0.0	0.0	0,0,0
1348	8.90e-03	5.50e-03	0.01	130,130,139	0.0	0.0	0.0	0,0,0
1349	8.63e-03	5.37e-03	0.01	130,130,139	0.0	0.0	0.0	0,0,0
1350	8.46e-03	5.27e-03	0.01	130,130,139	0.0	0.0	0.0	0,0,0
1351	8.84e-03	5.38e-03	0.01	130,130,139	0.0	0.0	0.0	0,0,0
1352	9.26e-03	5.53e-03	0.01	130,130,139	0.0	0.0	0.0	0,0,0
1353	9.66e-03	5.71e-03	0.01	130,130,139	0.0	0.0	0.0	0,0,0
1354	9.93e-03	5.76e-03	0.01	130,130,139	0.0	0.0	0.0	0,0,0
1355	0.01	5.76e-03	0.01	130,130,139	0.0	0.0	0.0	0,0,0
1356	0.01	5.81e-03	0.01	130,130,139	0.0	0.0	0.0	0,0,0
1357	0.01	6.06e-03	0.01	130,130,139	0.0	0.0	0.0	0,0,0
1358	0.01	6.25e-03	0.01	130,130,139	0.0	0.0	0.0	0,0,0
1359	0.01	6.42e-03	0.02	130,130,139	0.0	0.0	0.0	0,0,0
1360	0.01	6.68e-03	0.02	130,130,139	0.0	0.0	0.0	0,0,0
1361	0.01	7.52e-03	0.02	130,130,139	0.0	0.0	0.0	0,0,0
1362	0.01	0.01	0.02	130,124,139	0.0	0.0	0.0	0,0,0
1363	0.01	6.80e-03	0.02	126,126,138	0.0	0.0	0.0	0,0,0
1364	0.01	7.72e-03	0.01	126,126,138	0.0	0.0	0.0	0,0,0
1365	0.01	7.00e-03	0.01	126,126,138	0.0	0.0	0.0	0,0,0
1366	9.84e-03	6.31e-03	0.01	126,126,138	0.0	0.0	0.0	0,0,0
1367	9.44e-03	5.51e-03	0.01	126,126,138	0.0	0.0	0.0	0,0,0
1368	9.22e-03	5.46e-03	0.01	126,126,138	0.0	0.0	0.0	0,0,0
1369	9.06e-03	5.43e-03	0.01	126,126,138	0.0	0.0	0.0	0,0,0
1370	8.89e-03	5.38e-03	0.01	126,126,138	0.0	0.0	0.0	0,0,0
1371	8.65e-03	5.27e-03	0.01	126,126,138	0.0	0.0	0.0	0,0,0
1372	8.17e-03	5.08e-03	0.01	126,126,138	0.0	0.0	0.0	0,0,0
1373	8.07e-03	5.02e-03	0.01	126,126,138	0.0	0.0	0.0	0,0,0
1374	8.49e-03	5.19e-03	0.01	130,130,138	0.0	0.0	0.0	0,0,0
1375	8.83e-03	5.34e-03	0.01	126,126,138	0.0	0.0	0.0	0,0,0
1376	9.07e-03	5.44e-03	0.01	126,126,138	0.0	0.0	0.0	0,0,0
1377	9.24e-03	5.48e-03	0.01	126,126,138	0.0	0.0	0.0	0,0,0
1378	9.39e-03	5.51e-03	0.01	126,126,138	0.0	0.0	0.0	0,0,0
1379	9.59e-03	5.56e-03	0.01	126,126,138	0.0	0.0	0.0	0,0,0
1380	9.99e-03	6.39e-03	0.01	126,126,138	0.0	0.0	0.0	0,0,0
1381	0.01	7.09e-03	0.01	126,126,138	0.0	0.0	0.0	0,0,0
1382	0.01	7.84e-03	0.01	126,126,138	0.0	0.0	0.0	0,0,0
1383	0.01	7.08e-03	0.02	126,126,138	0.0	0.0	0.0	0,0,0
1384	0.01	9.99e-03	0.02	130,124,139	0.0	0.0	0.0	0,0,0
1385	0.01	0.02	0.02	126,130,138	0.0	0.0	0.0	0,0,0
1386	0.01	0.02	0.02	126,126,138	0.0	0.0	0.0	0,0,0
1387	0.01	0.01	0.01	126,130,138	0.0	0.0	0.0	0,0,0
1388	0.01	0.01	0.01	126,126,138	0.0	0.0	0.0	0,0,0
1389	9.92e-03	0.01	0.01	126,130,138	0.0	0.0	0.0	0,0,0
1390	0.01	8.68e-03	0.01	126,130,138	0.0	0.0	0.0	0,0,0
1391	9.65e-03	6.89e-03	0.01	126,130,138	0.0	0.0	0.0	0,0,0
1392	9.74e-03	5.74e-03	0.01	126,126,138	0.0	0.0	0.0	0,0,0

1393	9.53e-03	5.57e-03	0.01	126,126,138	0.0	0.0	0.0	0,0,0
1394	9.54e-03	5.63e-03	0.01	126,126,138	0.0	0.0	0.0	0,0,0
1395	9.35e-03	5.46e-03	0.01	126,126,138	0.0	0.0	0.0	0,0,0
1396	9.33e-03	5.49e-03	0.01	126,126,138	0.0	0.0	0.0	0,0,0
1397	9.06e-03	5.28e-03	0.01	126,126,138	0.0	0.0	0.0	0,0,0
1398	9.02e-03	5.31e-03	0.01	126,126,138	0.0	0.0	0.0	0,0,0
1399	8.86e-03	5.15e-03	0.01	126,126,138	0.0	0.0	0.0	0,0,0
1400	8.83e-03	5.20e-03	0.01	126,126,138	0.0	0.0	0.0	0,0,0
1401	8.79e-03	5.09e-03	0.01	126,126,138	0.0	0.0	0.0	0,0,0
1402	8.73e-03	5.14e-03	0.01	126,126,138	0.0	0.0	0.0	0,0,0
1403	8.79e-03	5.09e-03	0.01	126,126,138	0.0	0.0	0.0	0,0,0
1404	8.67e-03	5.12e-03	0.01	126,126,138	0.0	0.0	0.0	0,0,0
1405	8.86e-03	5.12e-03	0.01	126,126,138	0.0	0.0	0.0	0,0,0
1406	8.80e-03	5.10e-03	0.01	126,126,138	0.0	0.0	0.0	0,0,0
1407	8.81e-03	5.09e-03	0.01	126,126,138	0.0	0.0	0.0	0,0,0
1408	8.84e-03	5.11e-03	0.01	126,126,138	0.0	0.0	0.0	0,0,0
1409	8.65e-03	5.10e-03	0.01	126,126,138	0.0	0.0	0.0	0,0,0
1410	8.76e-03	5.07e-03	0.01	126,126,138	0.0	0.0	0.0	0,0,0
1411	8.70e-03	5.13e-03	0.01	126,126,138	0.0	0.0	0.0	0,0,0
1412	8.75e-03	5.08e-03	0.01	126,126,138	0.0	0.0	0.0	0,0,0
1413	8.80e-03	5.18e-03	0.01	126,126,138	0.0	0.0	0.0	0,0,0
1414	8.82e-03	5.13e-03	0.01	126,126,138	0.0	0.0	0.0	0,0,0
1415	8.98e-03	5.29e-03	0.01	126,126,138	0.0	0.0	0.0	0,0,0
1416	9.01e-03	5.26e-03	0.01	126,126,138	0.0	0.0	0.0	0,0,0
1417	9.29e-03	5.47e-03	0.01	126,126,138	0.0	0.0	0.0	0,0,0
1418	9.30e-03	5.44e-03	0.01	126,126,138	0.0	0.0	0.0	0,0,0
1419	9.49e-03	5.60e-03	0.01	126,126,138	0.0	0.0	0.0	0,0,0
1420	9.47e-03	5.55e-03	0.01	126,126,138	0.0	0.0	0.0	0,0,0
1421	9.68e-03	5.71e-03	0.01	126,126,138	0.0	0.0	0.0	0,0,0
1422	9.59e-03	6.34e-03	0.01	126,130,138	0.0	0.0	0.0	0,0,0
1423	9.96e-03	7.67e-03	0.01	126,130,138	0.0	0.0	0.0	0,0,0
1424	9.86e-03	0.01	0.01	126,130,138	0.0	0.0	0.0	0,0,0
1425	0.01	0.01	0.01	126,126,138	0.0	0.0	0.0	0,0,0
1426	0.01	0.01	0.01	126,130,138	0.0	0.0	0.0	0,0,0
1427	0.01	0.02	0.02	126,126,138	0.0	0.0	0.0	0,0,0
1428	0.01	0.02	0.02	126,130,138	0.0	0.0	0.0	0,0,0
1429	0.02	9.08e-03	0.02	126,126,138	0.0	0.0	0.0	0,0,0
1430	0.02	0.01	0.02	126,126,138	0.0	0.0	0.0	0,0,0
1431	0.02	0.01	0.02	126,126,138	0.0	0.0	0.0	0,0,0
1432	0.02	0.01	0.02	126,126,138	0.0	0.0	0.0	0,0,0
1433	0.02	9.05e-03	0.02	126,126,138	0.0	0.0	0.0	0,0,0
1434	0.02	9.11e-03	0.02	126,126,138	0.0	0.0	0.0	0,0,0
1435	0.02	0.01	0.02	126,126,138	0.0	0.0	0.0	0,0,0
1436	0.02	0.01	0.03	126,126,138	0.0	0.0	0.0	0,0,0
1437	0.02	0.01	0.03	126,126,138	0.0	0.0	0.0	0,0,0
1438	0.02	0.01	0.02	126,126,138	0.0	0.0	0.0	0,0,0
1439	0.02	0.01	0.02	126,126,138	0.0	0.0	0.0	0,0,0
1440	0.02	0.01	0.02	126,126,138	0.0	0.0	0.0	0,0,0
1441	0.02	0.01	0.02	126,126,138	0.0	0.0	0.0	0,0,0
1442	0.02	0.01	0.03	126,126,138	0.0	0.0	0.0	0,0,0
1443	0.02	0.01	0.02	126,126,138	0.0	0.0	0.0	0,0,0
1444	0.02	0.01	0.02	126,126,138	0.0	0.0	0.0	0,0,0
1445	0.02	0.01	0.02	126,126,138	0.0	0.0	0.0	0,0,0
1446	0.02	0.01	0.02	126,126,138	0.0	0.0	0.0	0,0,0
1447	0.02	0.01	0.02	126,126,138	0.0	0.0	0.0	0,0,0
1448	0.02	0.01	0.03	126,126,138	0.0	0.0	0.0	0,0,0
1449	0.02	0.01	0.03	126,126,138	0.0	0.0	0.0	0,0,0
1450	0.02	0.01	0.02	126,126,138	0.0	0.0	0.0	0,0,0
1451	0.02	0.01	0.02	126,126,138	0.0	0.0	0.0	0,0,0
1452	0.02	0.01	0.02	126,126,138	0.0	0.0	0.0	0,0,0
1453	0.02	0.01	0.03	126,126,138	0.0	0.0	0.0	0,0,0
1454	0.02	0.01	0.03	126,126,138	0.0	0.0	0.0	0,0,0
1455	0.02	0.01	0.02	126,126,138	0.0	0.0	0.0	0,0,0
1456	0.02	9.09e-03	0.02	126,126,138	0.0	0.0	0.0	0,0,0
1457	0.01	7.96e-03	0.02	126,126,138	0.0	0.0	0.0	0,0,0
1458	0.02	9.70e-03	0.02	126,126,138	0.0	0.0	0.0	0,0,0
1459	0.02	0.01	0.02	126,126,138	0.0	0.0	0.0	0,0,0
1460	0.02	0.01	0.02	126,126,138	0.0	0.0	0.0	0,0,0
1461	0.02	9.40e-03	0.02	126,126,138	0.0	0.0	0.0	0,0,0
1462	0.01	9.00e-03	0.02	126,126,138	0.0	0.0	0.0	0,0,0
1463	0.02	9.47e-03	0.02	126,126,138	0.0	0.0	0.0	0,0,0
1464	0.02	0.01	0.02	126,126,138	0.0	0.0	0.0	0,0,0
1465	0.02	0.01	0.02	126,126,138	0.0	0.0	0.0	0,0,0
1466	0.02	0.01	0.02	126,126,138	0.0	0.0	0.0	0,0,0
1467	0.01	9.24e-03	0.02	126,126,138	0.0	0.0	0.0	0,0,0
1468	0.01	8.82e-03	0.02	126,126,138	0.0	0.0	0.0	0,0,0
1469	0.01	9.29e-03	0.02	126,126,138	0.0	0.0	0.0	0,0,0
1470	0.02	0.01	0.02	126,126,138	0.0	0.0	0.0	0,0,0

1471	0.02	0.01	0.02	126,126,138	0.0	0.0	0.0	0,0,0
1472	0.02	0.01	0.02	126,126,138	0.0	0.0	0.0	0,0,0
1473	0.02	9.58e-03	0.02	126,126,138	0.0	0.0	0.0	0,0,0
1474	0.02	9.11e-03	0.02	126,126,138	0.0	0.0	0.0	0,0,0
1475	0.02	9.51e-03	0.02	126,126,138	0.0	0.0	0.0	0,0,0
1476	0.02	0.01	0.02	126,126,138	0.0	0.0	0.0	0,0,0
1477	0.02	0.01	0.02	126,126,138	0.0	0.0	0.0	0,0,0
1478	0.02	9.75e-03	0.02	126,126,138	0.0	0.0	0.0	0,0,0
1479	0.01	7.95e-03	0.02	126,126,138	0.0	0.0	0.0	0,0,0
1480	0.01	6.90e-03	0.02	130,130,139	0.0	0.0	0.0	0,0,0
1481	0.01	7.53e-03	0.02	130,130,139	0.0	0.0	0.0	0,0,0
1482	0.01	7.74e-03	0.02	130,130,139	0.0	0.0	0.0	0,0,0
1483	0.01	7.59e-03	0.02	130,130,139	0.0	0.0	0.0	0,0,0
1484	0.01	7.17e-03	0.02	130,130,139	0.0	0.0	0.0	0,0,0
1485	0.01	6.92e-03	0.01	130,130,139	0.0	0.0	0.0	0,0,0
1486	0.01	7.15e-03	0.02	130,130,139	0.0	0.0	0.0	0,0,0
1487	0.01	7.54e-03	0.02	130,130,139	0.0	0.0	0.0	0,0,0
1488	0.01	7.57e-03	0.02	130,130,139	0.0	0.0	0.0	0,0,0
1489	0.01	7.36e-03	0.02	130,130,139	0.0	0.0	0.0	0,0,0
1490	0.01	6.91e-03	0.01	130,130,139	0.0	0.0	0.0	0,0,0
1491	0.01	6.68e-03	0.01	130,130,139	0.0	0.0	0.0	0,0,0
1492	0.01	6.94e-03	0.01	130,130,139	0.0	0.0	0.0	0,0,0
1493	0.01	7.39e-03	0.02	130,130,139	0.0	0.0	0.0	0,0,0
1494	0.01	7.77e-03	0.02	130,130,139	0.0	0.0	0.0	0,0,0
1495	0.01	7.63e-03	0.02	130,130,139	0.0	0.0	0.0	0,0,0
1496	0.01	7.23e-03	0.02	130,130,139	0.0	0.0	0.0	0,0,0
1497	0.01	7.00e-03	0.02	130,130,139	0.0	0.0	0.0	0,0,0
1498	0.01	7.25e-03	0.02	130,130,139	0.0	0.0	0.0	0,0,0
1499	0.01	7.66e-03	0.02	130,130,139	0.0	0.0	0.0	0,0,0
1500	0.01	7.80e-03	0.02	130,130,139	0.0	0.0	0.0	0,0,0
1501	0.01	7.57e-03	0.02	130,130,139	0.0	0.0	0.0	0,0,0
1502	0.01	6.92e-03	0.02	130,130,139	0.0	0.0	0.0	0,0,0
1503	0.01	6.34e-03	0.01	130,130,139	0.0	0.0	0.0	0,0,0
1504	0.01	6.09e-03	0.01	130,130,139	0.0	0.0	0.0	0,0,0
1505	0.01	6.05e-03	0.01	130,130,139	0.0	0.0	0.0	0,0,0
1506	9.93e-03	5.95e-03	0.01	130,130,139	0.0	0.0	0.0	0,0,0
1507	9.59e-03	5.76e-03	0.01	130,130,139	0.0	0.0	0.0	0,0,0
1508	9.30e-03	5.62e-03	0.01	130,130,139	0.0	0.0	0.0	0,0,0
1509	9.35e-03	5.69e-03	0.01	130,130,139	0.0	0.0	0.0	0,0,0
1510	9.46e-03	5.78e-03	0.01	130,130,139	0.0	0.0	0.0	0,0,0
1511	9.21e-03	5.74e-03	0.01	130,130,139	0.0	0.0	0.0	0,0,0
1512	9.08e-03	5.65e-03	0.01	130,130,139	0.0	0.0	0.0	0,0,0
1513	8.83e-03	5.49e-03	0.01	130,130,139	0.0	0.0	0.0	0,0,0
1514	8.66e-03	5.39e-03	0.01	130,130,139	0.0	0.0	0.0	0,0,0
1515	8.85e-03	5.51e-03	0.01	130,130,139	0.0	0.0	0.0	0,0,0
1516	9.10e-03	5.66e-03	0.01	130,130,139	0.0	0.0	0.0	0,0,0
1517	9.59e-03	5.86e-03	0.01	130,130,139	0.0	0.0	0.0	0,0,0
1518	9.60e-03	5.83e-03	0.01	130,130,139	0.0	0.0	0.0	0,0,0
1519	9.46e-03	5.72e-03	0.01	130,130,139	0.0	0.0	0.0	0,0,0
1520	9.41e-03	5.66e-03	0.01	130,130,139	0.0	0.0	0.0	0,0,0
1521	9.70e-03	5.80e-03	0.01	130,130,139	0.0	0.0	0.0	0,0,0
1522	0.01	5.99e-03	0.01	130,130,139	0.0	0.0	0.0	0,0,0
1523	0.01	6.09e-03	0.01	130,130,139	0.0	0.0	0.0	0,0,0
1524	0.01	6.12e-03	0.01	130,130,139	0.0	0.0	0.0	0,0,0
1525	0.01	6.37e-03	0.01	130,130,139	0.0	0.0	0.0	0,0,0
1526	0.01	7.56e-03	0.01	130,124,139	0.0	0.0	0.0	0,0,0
1527	9.44e-03	5.53e-03	0.01	126,126,138	0.0	0.0	0.0	0,0,0
1528	8.98e-03	5.31e-03	0.01	126,126,138	0.0	0.0	0.0	0,0,0
1529	8.70e-03	5.19e-03	0.01	126,126,138	0.0	0.0	0.0	0,0,0
1530	8.49e-03	5.09e-03	0.01	126,126,138	0.0	0.0	0.0	0,0,0
1531	8.27e-03	4.99e-03	0.01	126,126,138	0.0	0.0	0.0	0,0,0
1532	8.21e-03	4.98e-03	0.01	126,126,138	0.0	0.0	0.0	0,0,0
1533	8.14e-03	4.96e-03	0.01	126,126,138	0.0	0.0	0.0	0,0,0
1534	7.84e-03	4.88e-03	0.01	126,126,138	0.0	0.0	0.0	0,0,0
1535	7.80e-03	4.86e-03	0.01	126,126,138	0.0	0.0	0.0	0,0,0
1536	7.77e-03	4.83e-03	0.01	126,126,138	0.0	0.0	0.0	0,0,0
1537	7.71e-03	4.80e-03	0.01	126,126,138	0.0	0.0	0.0	0,0,0
1538	7.77e-03	4.84e-03	0.01	126,126,138	0.0	0.0	0.0	0,0,0
1539	7.80e-03	4.86e-03	0.01	126,126,138	0.0	0.0	0.0	0,0,0
1540	8.12e-03	4.95e-03	0.01	126,126,138	0.0	0.0	0.0	0,0,0
1541	8.23e-03	4.99e-03	0.01	126,126,138	0.0	0.0	0.0	0,0,0
1542	8.30e-03	5.00e-03	0.01	126,126,138	0.0	0.0	0.0	0,0,0
1543	8.35e-03	5.00e-03	0.01	126,126,138	0.0	0.0	0.0	0,0,0
1544	8.57e-03	5.11e-03	0.01	126,126,138	0.0	0.0	0.0	0,0,0
1545	8.79e-03	5.22e-03	0.01	126,126,138	0.0	0.0	0.0	0,0,0
1546	9.07e-03	5.34e-03	0.01	126,126,138	0.0	0.0	0.0	0,0,0
1547	9.55e-03	5.57e-03	0.01	126,126,138	0.0	0.0	0.0	0,0,0
1548	0.01	7.10e-03	0.01	130,124,139	0.0	0.0	0.0	0,0,0

1549	0.01	0.02	0.01	126,130,138	0.0	0.0	0.0	0,0,0
1550	0.01	0.02	0.01	126,126,138	0.0	0.0	0.0	0,0,0
1551	9.21e-03	0.01	0.01	126,130,138	0.0	0.0	0.0	0,0,0
1552	9.34e-03	0.01	0.01	126,126,138	0.0	0.0	0.0	0,0,0
1553	8.45e-03	5.73e-03	0.01	126,130,138	0.0	0.0	0.0	0,0,0
1554	8.65e-03	7.69e-03	0.01	126,130,138	0.0	0.0	0.0	0,0,0
1555	8.10e-03	4.82e-03	0.01	126,126,138	0.0	0.0	0.0	0,0,0
1556	8.28e-03	4.98e-03	0.01	126,126,138	0.0	0.0	0.0	0,0,0
1557	7.96e-03	4.74e-03	0.01	126,126,138	0.0	0.0	0.0	0,0,0
1558	8.06e-03	4.85e-03	0.01	126,126,138	0.0	0.0	0.0	0,0,0
1559	7.81e-03	4.64e-03	0.01	126,126,138	0.0	0.0	0.0	0,0,0
1560	7.87e-03	4.71e-03	0.01	126,126,138	0.0	0.0	0.0	0,0,0
1561	7.55e-03	4.47e-03	9.94e-03	126,126,138	0.0	0.0	0.0	0,0,0
1562	7.58e-03	4.52e-03	9.97e-03	126,126,138	0.0	0.0	0.0	0,0,0
1563	7.35e-03	4.33e-03	9.68e-03	126,126,138	0.0	0.0	0.0	0,0,0
1564	7.35e-03	4.38e-03	9.68e-03	126,126,138	0.0	0.0	0.0	0,0,0
1565	7.24e-03	4.26e-03	9.55e-03	126,126,138	0.0	0.0	0.0	0,0,0
1566	7.18e-03	4.30e-03	9.48e-03	126,126,138	0.0	0.0	0.0	0,0,0
1567	7.21e-03	4.26e-03	9.52e-03	126,126,138	0.0	0.0	0.0	0,0,0
1568	7.16e-03	4.27e-03	9.44e-03	126,126,138	0.0	0.0	0.0	0,0,0
1569	7.27e-03	4.30e-03	9.59e-03	126,126,138	0.0	0.0	0.0	0,0,0
1570	7.26e-03	4.29e-03	9.57e-03	126,126,138	0.0	0.0	0.0	0,0,0
1571	7.25e-03	4.28e-03	9.56e-03	126,126,138	0.0	0.0	0.0	0,0,0
1572	7.27e-03	4.30e-03	9.59e-03	126,126,138	0.0	0.0	0.0	0,0,0
1573	7.14e-03	4.27e-03	9.42e-03	126,126,138	0.0	0.0	0.0	0,0,0
1574	7.21e-03	4.25e-03	9.52e-03	126,126,138	0.0	0.0	0.0	0,0,0
1575	7.20e-03	4.30e-03	9.49e-03	126,126,138	0.0	0.0	0.0	0,0,0
1576	7.24e-03	4.26e-03	9.55e-03	126,126,138	0.0	0.0	0.0	0,0,0
1577	7.37e-03	4.38e-03	9.71e-03	126,126,138	0.0	0.0	0.0	0,0,0
1578	7.36e-03	4.34e-03	9.70e-03	126,126,138	0.0	0.0	0.0	0,0,0
1579	7.61e-03	4.53e-03	0.01	126,126,138	0.0	0.0	0.0	0,0,0
1580	7.57e-03	4.48e-03	9.96e-03	126,126,138	0.0	0.0	0.0	0,0,0
1581	7.89e-03	4.72e-03	0.01	126,126,138	0.0	0.0	0.0	0,0,0
1582	7.83e-03	4.65e-03	0.01	126,126,138	0.0	0.0	0.0	0,0,0
1583	8.08e-03	4.85e-03	0.01	126,126,138	0.0	0.0	0.0	0,0,0
1584	7.97e-03	4.74e-03	0.01	126,126,138	0.0	0.0	0.0	0,0,0
1585	8.29e-03	4.97e-03	0.01	126,126,138	0.0	0.0	0.0	0,0,0
1586	8.11e-03	4.82e-03	0.01	126,126,138	0.0	0.0	0.0	0,0,0
1587	8.65e-03	6.66e-03	0.01	126,130,138	0.0	0.0	0.0	0,0,0
1588	8.45e-03	5.14e-03	0.01	126,130,138	0.0	0.0	0.0	0,0,0
1589	9.34e-03	0.01	0.01	126,126,138	0.0	0.0	0.0	0,0,0
1590	9.21e-03	0.01	0.01	126,130,138	0.0	0.0	0.0	0,0,0
1591	0.01	0.02	0.01	126,126,138	0.0	0.0	0.0	0,0,0
1592	0.01	0.02	0.01	126,130,138	0.0	0.0	0.0	0,0,0
1593	0.02	9.70e-03	0.02	126,126,138	0.0	0.0	0.0	0,0,0
1594	0.02	0.01	0.02	126,126,138	0.0	0.0	0.0	0,0,0
1595	0.02	0.01	0.02	126,126,138	0.0	0.0	0.0	0,0,0
1596	0.02	0.01	0.03	126,126,138	0.0	0.0	0.0	0,0,0
1597	0.02	9.80e-03	0.02	126,126,138	0.0	0.0	0.0	0,0,0
1598	0.02	9.74e-03	0.02	126,126,138	0.0	0.0	0.0	0,0,0
1599	0.02	0.01	0.03	126,126,138	0.0	0.0	0.0	0,0,0
1600	0.02	0.01	0.03	126,126,138	0.0	0.0	0.0	0,0,0
1601	0.02	0.01	0.03	126,126,138	0.0	0.0	0.0	0,0,0
1602	0.02	0.01	0.03	126,126,138	0.0	0.0	0.0	0,0,0
1603	0.02	0.01	0.02	126,126,138	0.0	0.0	0.0	0,0,0
1604	0.02	0.01	0.03	126,126,138	0.0	0.0	0.0	0,0,0
1605	0.02	0.01	0.03	126,126,138	0.0	0.0	0.0	0,0,0
1606	0.02	0.01	0.03	126,126,138	0.0	0.0	0.0	0,0,0
1607	0.02	0.01	0.02	126,126,138	0.0	0.0	0.0	0,0,0
1608	0.02	0.01	0.02	126,126,138	0.0	0.0	0.0	0,0,0
1609	0.02	9.99e-03	0.02	126,126,138	0.0	0.0	0.0	0,0,0
1610	0.02	0.01	0.02	126,126,138	0.0	0.0	0.0	0,0,0
1611	0.02	0.01	0.03	126,126,138	0.0	0.0	0.0	0,0,0
1612	0.02	0.01	0.03	126,126,138	0.0	0.0	0.0	0,0,0
1613	0.02	0.01	0.03	126,126,138	0.0	0.0	0.0	0,0,0
1614	0.02	0.01	0.03	126,126,138	0.0	0.0	0.0	0,0,0
1615	0.02	0.01	0.02	126,126,138	0.0	0.0	0.0	0,0,0
1616	0.02	0.01	0.03	126,126,138	0.0	0.0	0.0	0,0,0
1617	0.02	0.01	0.03	126,126,138	0.0	0.0	0.0	0,0,0
1618	0.02	0.01	0.03	126,126,138	0.0	0.0	0.0	0,0,0
1619	0.02	0.01	0.03	126,126,138	0.0	0.0	0.0	0,0,0
1620	0.02	9.87e-03	0.02	126,126,138	0.0	0.0	0.0	0,0,0
1621	0.02	8.78e-03	0.02	126,126,138	0.0	0.0	0.0	0,0,0
1622	0.02	0.01	0.02	126,126,138	0.0	0.0	0.0	0,0,0
1623	0.02	0.01	0.02	126,126,138	0.0	0.0	0.0	0,0,0
1624	0.02	0.01	0.02	126,126,138	0.0	0.0	0.0	0,0,0
1625	0.02	9.48e-03	0.02	130,130,139	0.0	0.0	0.0	0,0,0
1626	0.02	8.99e-03	0.02	126,126,138	0.0	0.0	0.0	0,0,0

1627	0.02	9.29e-03	0.02	126,126,138	0.0	0.0	0.0	0,0,0
1628	0.02	9.89e-03	0.02	126,126,138	0.0	0.0	0.0	0,0,0
1629	0.02	0.01	0.02	126,126,138	0.0	0.0	0.0	0,0,0
1630	0.02	9.52e-03	0.02	126,126,138	0.0	0.0	0.0	0,0,0
1631	0.01	8.67e-03	0.02	126,126,138	0.0	0.0	0.0	0,0,0
1632	0.01	8.37e-03	0.02	126,126,138	0.0	0.0	0.0	0,0,0
1633	0.01	8.84e-03	0.02	130,126,139	0.0	0.0	0.0	0,0,0
1634	0.02	9.82e-03	0.02	126,126,138	0.0	0.0	0.0	0,0,0
1635	0.02	0.01	0.02	126,126,138	0.0	0.0	0.0	0,0,0
1636	0.02	0.01	0.02	126,126,138	0.0	0.0	0.0	0,0,0
1637	0.02	9.58e-03	0.02	126,126,138	0.0	0.0	0.0	0,0,0
1638	0.02	9.26e-03	0.02	126,126,138	0.0	0.0	0.0	0,0,0
1639	0.02	9.75e-03	0.02	130,130,139	0.0	0.0	0.0	0,0,0
1640	0.02	0.01	0.02	126,126,138	0.0	0.0	0.0	0,0,0
1641	0.02	0.01	0.03	126,126,138	0.0	0.0	0.0	0,0,0
1642	0.02	0.01	0.03	126,126,138	0.0	0.0	0.0	0,0,0
1643	0.02	8.90e-03	0.02	126,126,138	0.0	0.0	0.0	0,0,0
1644	0.02	7.84e-03	0.02	130,130,139	0.0	0.0	0.0	0,0,0
1645	0.02	8.46e-03	0.02	130,130,139	0.0	0.0	0.0	0,0,0
1646	0.02	8.45e-03	0.02	130,130,139	0.0	0.0	0.0	0,0,0
1647	0.01	8.20e-03	0.02	130,130,139	0.0	0.0	0.0	0,0,0
1648	0.01	7.70e-03	0.02	130,130,139	0.0	0.0	0.0	0,0,0
1649	0.01	7.34e-03	0.02	130,130,139	0.0	0.0	0.0	0,0,0
1650	0.01	7.44e-03	0.02	130,130,139	0.0	0.0	0.0	0,0,0
1651	0.01	7.74e-03	0.02	130,130,139	0.0	0.0	0.0	0,0,0
1652	0.01	7.79e-03	0.02	130,130,139	0.0	0.0	0.0	0,0,0
1653	0.01	7.44e-03	0.02	130,130,139	0.0	0.0	0.0	0,0,0
1654	0.01	6.80e-03	0.01	130,130,139	0.0	0.0	0.0	0,0,0
1655	0.01	6.57e-03	0.01	130,130,139	0.0	0.0	0.0	0,0,0
1656	0.01	7.07e-03	0.01	130,130,139	0.0	0.0	0.0	0,0,0
1657	0.01	7.65e-03	0.02	130,130,139	0.0	0.0	0.0	0,0,0
1658	0.01	7.99e-03	0.02	130,130,139	0.0	0.0	0.0	0,0,0
1659	0.01	7.94e-03	0.02	130,130,139	0.0	0.0	0.0	0,0,0
1660	0.01	7.64e-03	0.02	130,130,139	0.0	0.0	0.0	0,0,0
1661	0.01	7.54e-03	0.02	130,130,139	0.0	0.0	0.0	0,0,0
1662	0.01	7.89e-03	0.02	130,130,139	0.0	0.0	0.0	0,0,0
1663	0.02	8.39e-03	0.02	130,130,139	0.0	0.0	0.0	0,0,0
1664	0.02	8.63e-03	0.02	130,130,139	0.0	0.0	0.0	0,0,0
1665	0.02	8.62e-03	0.02	130,130,139	0.0	0.0	0.0	0,0,0
1666	0.02	7.94e-03	0.02	130,130,139	0.0	0.0	0.0	0,0,0
1667	0.01	7.17e-03	0.02	130,130,139	0.0	0.0	0.0	0,0,0
1668	0.01	7.02e-03	0.02	130,130,139	0.0	0.0	0.0	0,0,0
1669	0.01	6.80e-03	0.02	130,130,139	0.0	0.0	0.0	0,0,0
1670	0.01	6.59e-03	0.02	130,130,139	0.0	0.0	0.0	0,0,0
1671	0.01	6.34e-03	0.01	130,130,139	0.0	0.0	0.0	0,0,0
1672	0.01	6.10e-03	0.01	130,130,139	0.0	0.0	0.0	0,0,0
1673	0.01	6.06e-03	0.01	130,130,139	0.0	0.0	0.0	0,0,0
1674	0.01	6.11e-03	0.01	130,130,139	0.0	0.0	0.0	0,0,0
1675	0.01	6.07e-03	0.01	130,130,139	0.0	0.0	0.0	0,0,0
1676	9.68e-03	5.88e-03	0.01	130,130,139	0.0	0.0	0.0	0,0,0
1677	8.92e-03	5.55e-03	0.01	130,130,139	0.0	0.0	0.0	0,0,0
1678	8.77e-03	5.46e-03	0.01	130,130,139	0.0	0.0	0.0	0,0,0
1679	9.49e-03	5.75e-03	0.01	130,130,139	0.0	0.0	0.0	0,0,0
1680	0.01	6.00e-03	0.01	130,130,139	0.0	0.0	0.0	0,0,0
1681	0.01	6.19e-03	0.01	130,130,139	0.0	0.0	0.0	0,0,0
1682	0.01	6.24e-03	0.01	130,130,139	0.0	0.0	0.0	0,0,0
1683	0.01	6.19e-03	0.01	130,130,139	0.0	0.0	0.0	0,0,0
1684	0.01	6.23e-03	0.01	130,130,139	0.0	0.0	0.0	0,0,0
1685	0.01	6.46e-03	0.02	130,130,139	0.0	0.0	0.0	0,0,0
1686	0.01	6.72e-03	0.02	130,130,139	0.0	0.0	0.0	0,0,0
1687	0.01	6.91e-03	0.02	130,130,139	0.0	0.0	0.0	0,0,0
1688	0.01	7.13e-03	0.02	130,130,139	0.0	0.0	0.0	0,0,0
1689	0.01	7.24e-03	0.02	130,130,139	0.0	0.0	0.0	0,0,0
1690	0.01	7.77e-03	0.01	130,124,139	0.0	0.0	0.0	0,0,0
1691	0.01	6.13e-03	0.01	126,126,138	0.0	0.0	0.0	0,0,0
1692	0.01	5.75e-03	0.01	126,126,138	0.0	0.0	0.0	0,0,0
1693	9.72e-03	5.53e-03	0.01	126,126,138	0.0	0.0	0.0	0,0,0
1694	9.40e-03	5.41e-03	0.01	126,126,138	0.0	0.0	0.0	0,0,0
1695	9.11e-03	5.30e-03	0.01	126,126,138	0.0	0.0	0.0	0,0,0
1696	8.88e-03	5.22e-03	0.01	126,126,138	0.0	0.0	0.0	0,0,0
1697	8.63e-03	5.13e-03	0.01	126,126,138	0.0	0.0	0.0	0,0,0
1698	8.33e-03	5.02e-03	0.01	126,126,138	0.0	0.0	0.0	0,0,0
1699	7.75e-03	4.82e-03	0.01	126,126,138	0.0	0.0	0.0	0,0,0
1700	7.74e-03	4.82e-03	0.01	126,126,138	0.0	0.0	0.0	0,0,0
1701	7.72e-03	4.81e-03	0.01	126,126,138	0.0	0.0	0.0	0,0,0
1702	7.75e-03	4.82e-03	0.01	126,126,138	0.0	0.0	0.0	0,0,0
1703	8.19e-03	4.97e-03	0.01	126,126,138	0.0	0.0	0.0	0,0,0
1704	8.50e-03	5.07e-03	0.01	126,126,138	0.0	0.0	0.0	0,0,0

1705	8.80e-03	5.18e-03	0.01	126,126,138	0.0	0.0	0.0	0,0,0
1706	9.05e-03	5.27e-03	0.01	126,126,138	0.0	0.0	0.0	0,0,0
1707	9.26e-03	5.34e-03	0.01	126,126,138	0.0	0.0	0.0	0,0,0
1708	9.55e-03	5.46e-03	0.01	126,126,138	0.0	0.0	0.0	0,0,0
1709	9.87e-03	5.58e-03	0.01	126,126,138	0.0	0.0	0.0	0,0,0
1710	0.01	5.79e-03	0.01	126,126,138	0.0	0.0	0.0	0,0,0
1711	0.01	6.18e-03	0.01	126,126,138	0.0	0.0	0.0	0,0,0
1712	0.01	7.19e-03	0.02	130,124,139	0.0	0.0	0.0	0,0,0
1713	9.51e-03	0.01	0.01	126,130,138	0.0	0.0	0.0	0,0,0
1714	9.93e-03	0.02	0.01	126,126,138	0.0	0.0	0.0	0,0,0
1715	9.11e-03	9.80e-03	0.01	126,130,138	0.0	0.0	0.0	0,0,0
1716	8.96e-03	0.01	0.01	126,126,138	0.0	0.0	0.0	0,0,0
1717	8.34e-03	4.93e-03	0.01	126,126,138	0.0	0.0	0.0	0,0,0
1718	8.19e-03	5.09e-03	0.01	126,126,138	0.0	0.0	0.0	0,0,0
1719	7.98e-03	4.70e-03	0.01	126,126,138	0.0	0.0	0.0	0,0,0
1720	7.77e-03	4.54e-03	0.01	126,126,138	0.0	0.0	0.0	0,0,0
1721	7.98e-03	4.67e-03	0.01	126,126,138	0.0	0.0	0.0	0,0,0
1722	7.60e-03	4.42e-03	9.99e-03	126,126,138	0.0	0.0	0.0	0,0,0
1723	7.91e-03	4.61e-03	0.01	126,126,138	0.0	0.0	0.0	0,0,0
1724	7.48e-03	4.29e-03	9.83e-03	126,126,138	0.0	0.0	0.0	0,0,0
1725	7.54e-03	4.41e-03	9.91e-03	126,126,138	0.0	0.0	0.0	0,0,0
1726	7.14e-03	4.09e-03	9.39e-03	126,126,138	0.0	0.0	0.0	0,0,0
1727	7.25e-03	4.22e-03	9.55e-03	126,126,138	0.0	0.0	0.0	0,0,0
1728	6.96e-03	3.99e-03	9.16e-03	126,126,138	0.0	0.0	0.0	0,0,0
1729	7.05e-03	4.10e-03	9.30e-03	126,126,138	0.0	0.0	0.0	0,0,0
1730	6.94e-03	3.98e-03	9.14e-03	126,126,138	0.0	0.0	0.0	0,0,0
1731	7.02e-03	4.08e-03	9.26e-03	126,126,138	0.0	0.0	0.0	0,0,0
1732	7.03e-03	4.05e-03	9.25e-03	126,126,138	0.0	0.0	0.0	0,0,0
1733	7.21e-03	4.16e-03	9.50e-03	126,126,138	0.0	0.0	0.0	0,0,0
1734	7.24e-03	4.16e-03	9.53e-03	126,126,138	0.0	0.0	0.0	0,0,0
1735	7.23e-03	4.16e-03	9.52e-03	126,126,138	0.0	0.0	0.0	0,0,0
1736	7.22e-03	4.16e-03	9.52e-03	126,126,138	0.0	0.0	0.0	0,0,0
1737	7.02e-03	4.04e-03	9.24e-03	126,126,138	0.0	0.0	0.0	0,0,0
1738	7.04e-03	4.08e-03	9.29e-03	126,126,138	0.0	0.0	0.0	0,0,0
1739	6.95e-03	3.97e-03	9.15e-03	126,126,138	0.0	0.0	0.0	0,0,0
1740	7.09e-03	4.11e-03	9.35e-03	126,126,138	0.0	0.0	0.0	0,0,0
1741	6.98e-03	3.99e-03	9.18e-03	126,126,138	0.0	0.0	0.0	0,0,0
1742	7.29e-03	4.24e-03	9.60e-03	126,126,138	0.0	0.0	0.0	0,0,0
1743	7.16e-03	4.09e-03	9.42e-03	126,126,138	0.0	0.0	0.0	0,0,0
1744	7.59e-03	4.42e-03	9.97e-03	126,126,138	0.0	0.0	0.0	0,0,0
1745	7.50e-03	4.30e-03	9.86e-03	126,126,138	0.0	0.0	0.0	0,0,0
1746	7.93e-03	4.62e-03	0.01	126,126,138	0.0	0.0	0.0	0,0,0
1747	7.61e-03	4.42e-03	0.01	126,126,138	0.0	0.0	0.0	0,0,0
1748	7.99e-03	4.67e-03	0.01	126,126,138	0.0	0.0	0.0	0,0,0
1749	7.78e-03	4.54e-03	0.01	126,126,138	0.0	0.0	0.0	0,0,0
1750	7.97e-03	4.69e-03	0.01	126,126,138	0.0	0.0	0.0	0,0,0
1751	8.20e-03	4.75e-03	0.01	126,126,138	0.0	0.0	0.0	0,0,0
1752	8.33e-03	4.91e-03	0.01	126,126,138	0.0	0.0	0.0	0,0,0
1753	8.97e-03	0.01	0.01	126,126,138	0.0	0.0	0.0	0,0,0
1754	9.10e-03	9.46e-03	0.01	126,130,138	0.0	0.0	0.0	0,0,0
1755	9.94e-03	0.02	0.01	126,126,138	0.0	0.0	0.0	0,0,0
1756	9.54e-03	0.01	0.01	126,130,138	0.0	0.0	0.0	0,0,0
1977	0.01	0.01	0.02	126,123,138	0.0	0.0	0.0	0,0,0
1978	0.02	0.01	0.02	126,130,138	0.0	0.0	0.0	0,0,0
1979	0.02	0.01	0.02	126,130,138	0.0	0.0	0.0	0,0,0
1980	0.02	0.02	0.02	126,130,138	0.0	0.0	0.0	0,0,0
1981	0.02	0.01	0.02	126,123,138	0.0	0.0	0.0	0,0,0
1982	0.02	8.75e-03	0.02	126,126,138	0.0	0.0	0.0	0,0,0
1983	0.02	0.01	0.03	126,126,138	0.0	0.0	0.0	0,0,0
1984	0.02	0.01	0.02	126,126,138	0.0	0.0	0.0	0,0,0
1985	0.02	0.01	0.02	126,126,138	0.0	0.0	0.0	0,0,0
1986	0.02	9.68e-03	0.02	126,126,138	0.0	0.0	0.0	0,0,0
1987	0.02	9.19e-03	0.02	126,126,138	0.0	0.0	0.0	0,0,0
1988	0.02	9.56e-03	0.02	126,126,138	0.0	0.0	0.0	0,0,0
1989	0.02	0.01	0.02	126,126,138	0.0	0.0	0.0	0,0,0
1990	0.02	0.01	0.02	126,126,138	0.0	0.0	0.0	0,0,0
1991	0.02	9.79e-03	0.02	126,126,138	0.0	0.0	0.0	0,0,0
1992	0.01	8.64e-03	0.02	126,126,138	0.0	0.0	0.0	0,0,0
1993	0.01	8.31e-03	0.02	126,126,138	0.0	0.0	0.0	0,0,0
1994	0.01	9.02e-03	0.02	126,126,138	0.0	0.0	0.0	0,0,0
1995	0.02	0.01	0.02	126,126,138	0.0	0.0	0.0	0,0,0
1996	0.02	0.01	0.02	126,126,138	0.0	0.0	0.0	0,0,0
1997	0.02	0.01	0.02	126,126,138	0.0	0.0	0.0	0,0,0
1998	0.02	9.95e-03	0.02	126,126,138	0.0	0.0	0.0	0,0,0
1999	0.02	9.53e-03	0.02	126,126,138	0.0	0.0	0.0	0,0,0
2000	0.02	0.01	0.02	126,126,138	0.0	0.0	0.0	0,0,0
2001	0.02	0.01	0.03	126,126,138	0.0	0.0	0.0	0,0,0
2002	0.02	0.01	0.03	126,126,138	0.0	0.0	0.0	0,0,0

2003	0.02	0.01	0.03	126,126,138	0.0	0.0	0.0	0,0,0
2004	0.02	8.85e-03	0.02	126,126,138	0.0	0.0	0.0	0,0,0
2005	0.02	7.66e-03	0.02	126,126,138	0.0	0.0	0.0	0,0,0
2006	0.02	8.87e-03	0.02	126,126,138	0.0	0.0	0.0	0,0,0
2007	0.02	9.05e-03	0.02	126,126,138	0.0	0.0	0.0	0,0,0
2008	0.02	8.68e-03	0.02	126,126,138	0.0	0.0	0.0	0,0,0
2009	0.01	7.84e-03	0.02	130,126,139	0.0	0.0	0.0	0,0,0
2010	0.01	7.38e-03	0.02	126,126,138	0.0	0.0	0.0	0,0,0
2011	0.01	7.68e-03	0.02	126,126,138	0.0	0.0	0.0	0,0,0
2012	0.01	8.31e-03	0.02	126,126,138	0.0	0.0	0.0	0,0,0
2013	0.01	8.44e-03	0.02	126,126,138	0.0	0.0	0.0	0,0,0
2014	0.01	7.87e-03	0.02	126,126,138	0.0	0.0	0.0	0,0,0
2015	0.01	6.86e-03	0.01	126,126,138	0.0	0.0	0.0	0,0,0
2016	0.01	6.49e-03	0.01	126,126,138	0.0	0.0	0.0	0,0,0
2017	0.01	7.17e-03	0.01	126,126,138	0.0	0.0	0.0	0,0,0
2018	0.01	8.17e-03	0.02	126,126,138	0.0	0.0	0.0	0,0,0
2019	0.01	8.74e-03	0.02	126,126,138	0.0	0.0	0.0	0,0,0
2020	0.02	8.61e-03	0.02	126,126,138	0.0	0.0	0.0	0,0,0
2021	0.01	7.98e-03	0.02	126,126,138	0.0	0.0	0.0	0,0,0
2022	0.01	7.66e-03	0.02	126,126,138	0.0	0.0	0.0	0,0,0
2023	0.01	8.12e-03	0.02	130,126,139	0.0	0.0	0.0	0,0,0
2024	0.02	8.94e-03	0.02	126,126,138	0.0	0.0	0.0	0,0,0
2025	0.02	9.30e-03	0.02	126,126,138	0.0	0.0	0.0	0,0,0
2026	0.02	9.09e-03	0.02	126,126,138	0.0	0.0	0.0	0,0,0
2027	0.02	7.76e-03	0.02	126,126,138	0.0	0.0	0.0	0,0,0
2028	0.01	6.72e-03	0.02	130,130,139	0.0	0.0	0.0	0,0,0
2029	0.01	6.94e-03	0.02	130,130,139	0.0	0.0	0.0	0,0,0
2030	0.01	6.88e-03	0.02	130,130,139	0.0	0.0	0.0	0,0,0
2031	0.01	6.56e-03	0.02	130,130,139	0.0	0.0	0.0	0,0,0
2032	0.01	6.00e-03	0.01	130,130,139	0.0	0.0	0.0	0,0,0
2033	0.01	5.63e-03	0.01	130,130,139	0.0	0.0	0.0	0,0,0
2034	0.01	5.80e-03	0.01	130,130,139	0.0	0.0	0.0	0,0,0
2035	0.01	6.14e-03	0.01	130,130,139	0.0	0.0	0.0	0,0,0
2036	0.01	6.16e-03	0.01	130,130,139	0.0	0.0	0.0	0,0,0
2037	9.51e-03	5.77e-03	0.01	130,130,139	0.0	0.0	0.0	0,0,0
2038	8.26e-03	5.14e-03	0.01	130,130,139	0.0	0.0	0.0	0,0,0
2039	7.92e-03	4.93e-03	0.01	130,130,139	0.0	0.0	0.0	0,0,0
2040	8.88e-03	5.36e-03	0.01	130,130,139	0.0	0.0	0.0	0,0,0
2041	0.01	5.98e-03	0.01	130,130,139	0.0	0.0	0.0	0,0,0
2042	0.01	6.37e-03	0.01	130,130,139	0.0	0.0	0.0	0,0,0
2043	0.01	6.35e-03	0.01	130,130,139	0.0	0.0	0.0	0,0,0
2044	0.01	6.01e-03	0.01	130,130,139	0.0	0.0	0.0	0,0,0
2045	0.01	5.84e-03	0.01	130,130,139	0.0	0.0	0.0	0,0,0
2046	0.01	6.21e-03	0.01	130,130,139	0.0	0.0	0.0	0,0,0
2047	0.01	6.76e-03	0.02	130,130,139	0.0	0.0	0.0	0,0,0
2048	0.01	7.06e-03	0.02	130,130,139	0.0	0.0	0.0	0,0,0
2049	0.01	7.11e-03	0.02	130,130,139	0.0	0.0	0.0	0,0,0
2050	0.01	6.81e-03	0.02	130,130,139	0.0	0.0	0.0	0,0,0
2051	0.01	5.98e-03	0.02	130,130,139	0.0	0.0	0.0	0,0,0
2052	0.01	5.38e-03	0.01	130,130,139	0.0	0.0	0.0	0,0,0
2053	9.66e-03	5.18e-03	0.01	130,130,139	0.0	0.0	0.0	0,0,0
2054	9.05e-03	4.92e-03	0.01	130,130,139	0.0	0.0	0.0	0,0,0
2055	8.39e-03	4.60e-03	0.01	130,130,139	0.0	0.0	0.0	0,0,0
2056	7.78e-03	4.32e-03	9.96e-03	130,130,139	0.0	0.0	0.0	0,0,0
2057	7.67e-03	4.36e-03	9.77e-03	130,130,139	0.0	0.0	0.0	0,0,0
2058	7.73e-03	4.48e-03	9.81e-03	130,130,139	0.0	0.0	0.0	0,0,0
2059	7.48e-03	4.43e-03	9.48e-03	130,130,139	0.0	0.0	0.0	0,0,0
2060	6.94e-03	4.20e-03	8.82e-03	130,130,139	0.0	0.0	0.0	0,0,0
2061	6.30e-03	3.92e-03	8.02e-03	130,130,139	0.0	0.0	0.0	0,0,0
2062	6.15e-03	3.83e-03	7.84e-03	130,130,139	0.0	0.0	0.0	0,0,0
2063	6.65e-03	4.00e-03	8.50e-03	130,130,139	0.0	0.0	0.0	0,0,0
2064	7.30e-03	4.33e-03	9.30e-03	130,130,139	0.0	0.0	0.0	0,0,0
2065	7.85e-03	4.56e-03	9.98e-03	130,130,139	0.0	0.0	0.0	0,0,0
2066	8.12e-03	4.60e-03	0.01	130,130,139	0.0	0.0	0.0	0,0,0
2067	8.06e-03	4.48e-03	0.01	130,130,139	0.0	0.0	0.0	0,0,0
2068	8.17e-03	4.45e-03	0.01	130,130,139	0.0	0.0	0.0	0,0,0
2069	8.78e-03	4.72e-03	0.01	130,130,139	0.0	0.0	0.0	0,0,0
2070	9.42e-03	5.05e-03	0.01	130,130,139	0.0	0.0	0.0	0,0,0
2071	0.01	5.30e-03	0.01	130,130,139	0.0	0.0	0.0	0,0,0
2072	0.01	5.49e-03	0.01	130,130,139	0.0	0.0	0.0	0,0,0
2073	0.01	6.05e-03	0.02	130,130,139	0.0	0.0	0.0	0,0,0
2074	9.84e-03	0.01	0.01	130,130,139	0.0	0.0	0.0	0,0,0
2075	7.85e-03	4.46e-03	0.01	126,121,138	0.0	0.0	0.0	0,0,0
2076	7.36e-03	4.37e-03	9.53e-03	126,121,138	0.0	0.0	0.0	0,0,0
2077	6.95e-03	3.86e-03	8.99e-03	126,126,138	0.0	0.0	0.0	0,0,0
2078	6.53e-03	3.65e-03	8.47e-03	126,126,138	0.0	0.0	0.0	0,0,0
2079	6.09e-03	3.46e-03	7.91e-03	126,126,138	0.0	0.0	0.0	0,0,0
2080	5.91e-03	3.42e-03	7.66e-03	126,126,138	0.0	0.0	0.0	0,0,0

2081	5.81e-03	3.42e-03	7.49e-03	126,126,138	0.0	0.0	0.0	0,0,0
2082	5.65e-03	3.37e-03	7.28e-03	126,126,138	0.0	0.0	0.0	0,0,0
2083	5.40e-03	3.26e-03	6.98e-03	126,126,138	0.0	0.0	0.0	0,0,0
2084	5.12e-03	3.19e-03	6.64e-03	130,130,139	0.0	0.0	0.0	0,0,0
2085	5.05e-03	3.15e-03	6.56e-03	130,130,139	0.0	0.0	0.0	0,0,0
2086	5.24e-03	3.18e-03	6.80e-03	126,130,138	0.0	0.0	0.0	0,0,0
2087	5.56e-03	3.32e-03	7.18e-03	126,126,138	0.0	0.0	0.0	0,0,0
2088	5.80e-03	3.41e-03	7.49e-03	126,126,138	0.0	0.0	0.0	0,0,0
2089	5.96e-03	3.46e-03	7.70e-03	126,126,138	0.0	0.0	0.0	0,0,0
2090	6.07e-03	3.47e-03	7.87e-03	126,126,138	0.0	0.0	0.0	0,0,0
2091	6.25e-03	3.50e-03	8.12e-03	126,126,138	0.0	0.0	0.0	0,0,0
2092	6.69e-03	3.70e-03	8.69e-03	126,126,138	0.0	0.0	0.0	0,0,0
2093	7.11e-03	3.91e-03	9.20e-03	126,126,138	0.0	0.0	0.0	0,0,0
2094	7.52e-03	4.59e-03	9.74e-03	126,121,138	0.0	0.0	0.0	0,0,0
2095	8.02e-03	4.80e-03	0.01	126,121,138	0.0	0.0	0.0	0,0,0
2096	9.93e-03	0.01	0.01	130,130,139	0.0	0.0	0.0	0,0,0
2097	7.57e-03	0.02	0.01	126,130,138	0.0	0.0	0.0	0,0,0
2098	7.80e-03	0.02	0.01	126,126,138	0.0	0.0	0.0	0,0,0
2099	7.50e-03	0.02	9.94e-03	126,130,138	0.0	0.0	0.0	0,0,0
2100	7.20e-03	0.01	9.52e-03	126,126,138	0.0	0.0	0.0	0,0,0
2101	6.95e-03	0.01	9.21e-03	126,130,138	0.0	0.0	0.0	0,0,0
2102	6.73e-03	7.90e-03	8.93e-03	126,130,138	0.0	0.0	0.0	0,0,0
2103	6.66e-03	7.77e-03	8.83e-03	126,130,138	0.0	0.0	0.0	0,0,0
2104	6.46e-03	3.87e-03	8.57e-03	126,126,138	0.0	0.0	0.0	0,0,0
2105	6.46e-03	3.82e-03	8.57e-03	126,126,138	0.0	0.0	0.0	0,0,0
2106	6.20e-03	3.73e-03	8.24e-03	126,126,138	0.0	0.0	0.0	0,0,0
2107	6.19e-03	3.65e-03	8.22e-03	126,126,138	0.0	0.0	0.0	0,0,0
2108	5.93e-03	3.56e-03	7.89e-03	126,126,138	0.0	0.0	0.0	0,0,0
2109	5.81e-03	3.42e-03	7.73e-03	126,126,138	0.0	0.0	0.0	0,0,0
2110	5.59e-03	3.36e-03	7.45e-03	126,126,138	0.0	0.0	0.0	0,0,0
2111	5.61e-03	3.27e-03	7.47e-03	126,126,138	0.0	0.0	0.0	0,0,0
2112	5.43e-03	3.26e-03	7.24e-03	121,126,138	0.0	0.0	0.0	0,0,0
2113	5.54e-03	3.22e-03	7.38e-03	126,126,138	0.0	0.0	0.0	0,0,0
2114	5.37e-03	3.23e-03	7.16e-03	121,126,138	0.0	0.0	0.0	0,0,0
2115	5.51e-03	3.19e-03	7.34e-03	126,126,138	0.0	0.0	0.0	0,0,0
2116	5.30e-03	3.20e-03	7.07e-03	121,126,138	0.0	0.0	0.0	0,0,0
2117	5.50e-03	3.17e-03	7.33e-03	126,126,138	0.0	0.0	0.0	0,0,0
2118	5.36e-03	3.14e-03	7.14e-03	121,126,138	0.0	0.0	0.0	0,0,0
2119	5.37e-03	3.13e-03	7.16e-03	121,126,138	0.0	0.0	0.0	0,0,0
2120	5.46e-03	3.16e-03	7.28e-03	126,126,138	0.0	0.0	0.0	0,0,0
2121	5.27e-03	3.18e-03	7.03e-03	121,126,138	0.0	0.0	0.0	0,0,0
2122	5.46e-03	3.17e-03	7.27e-03	126,126,138	0.0	0.0	0.0	0,0,0
2123	5.32e-03	3.21e-03	7.10e-03	121,126,138	0.0	0.0	0.0	0,0,0
2124	5.48e-03	3.20e-03	7.30e-03	126,126,138	0.0	0.0	0.0	0,0,0
2125	5.37e-03	3.24e-03	7.17e-03	121,126,138	0.0	0.0	0.0	0,0,0
2126	5.55e-03	3.26e-03	7.39e-03	126,126,138	0.0	0.0	0.0	0,0,0
2127	5.61e-03	3.34e-03	7.38e-03	126,126,138	0.0	0.0	0.0	0,0,0
2128	5.75e-03	3.40e-03	7.65e-03	126,126,138	0.0	0.0	0.0	0,0,0
2129	5.88e-03	3.54e-03	7.81e-03	126,126,138	0.0	0.0	0.0	0,0,0
2130	6.12e-03	3.63e-03	8.13e-03	126,126,138	0.0	0.0	0.0	0,0,0
2131	6.13e-03	3.70e-03	8.16e-03	126,126,138	0.0	0.0	0.0	0,0,0
2132	6.39e-03	3.79e-03	8.48e-03	126,126,138	0.0	0.0	0.0	0,0,0
2133	6.38e-03	3.84e-03	8.47e-03	126,126,138	0.0	0.0	0.0	0,0,0
2134	6.58e-03	7.38e-03	8.72e-03	126,130,138	0.0	0.0	0.0	0,0,0
2135	6.67e-03	7.00e-03	8.83e-03	126,130,138	0.0	0.0	0.0	0,0,0
2136	6.86e-03	0.01	9.10e-03	126,130,138	0.0	0.0	0.0	0,0,0
2137	7.20e-03	0.01	9.46e-03	126,126,138	0.0	0.0	0.0	0,0,0
2138	7.42e-03	0.02	9.82e-03	126,130,138	0.0	0.0	0.0	0,0,0
2139	7.74e-03	0.02	0.01	126,126,138	0.0	0.0	0.0	0,0,0
2140	7.51e-03	0.02	9.96e-03	126,130,138	0.0	0.0	0.0	0,0,0
2141	0.01	6.74e-03	0.01	126,126,138	0.0	0.0	0.0	0,0,0
2142	0.01	7.85e-03	0.02	126,126,138	0.0	0.0	0.0	0,0,0
2143	0.01	7.62e-03	0.02	126,126,138	0.0	0.0	0.0	0,0,0
2144	0.01	7.95e-03	0.02	126,126,138	0.0	0.0	0.0	0,0,0
2145	0.01	6.76e-03	0.01	126,126,138	0.0	0.0	0.0	0,0,0
2146	0.01	6.73e-03	0.01	126,126,138	0.0	0.0	0.0	0,0,0
2147	0.02	8.80e-03	0.02	130,130,139	0.0	0.0	0.0	0,0,0
2148	0.02	9.55e-03	0.02	126,126,138	0.0	0.0	0.0	0,0,0
2149	0.02	9.19e-03	0.02	130,130,139	0.0	0.0	0.0	0,0,0
2150	0.01	8.09e-03	0.02	130,130,139	0.0	0.0	0.0	0,0,0
2151	0.01	7.73e-03	0.02	126,126,138	0.0	0.0	0.0	0,0,0
2152	0.01	8.22e-03	0.02	130,130,139	0.0	0.0	0.0	0,0,0
2153	0.02	9.40e-03	0.02	126,126,138	0.0	0.0	0.0	0,0,0
2154	0.02	9.65e-03	0.02	126,126,138	0.0	0.0	0.0	0,0,0
2155	0.01	9.06e-03	0.02	126,126,138	0.0	0.0	0.0	0,0,0
2156	0.01	7.79e-03	0.02	130,130,139	0.0	0.0	0.0	0,0,0
2157	0.01	7.43e-03	0.01	126,126,138	0.0	0.0	0.0	0,0,0
2158	0.01	7.92e-03	0.02	130,130,139	0.0	0.0	0.0	0,0,0

2159	0.01	9.21e-03	0.02	126,126,138	0.0	0.0	0.0	0,0,0
2160	0.02	0.01	0.02	126,126,138	0.0	0.0	0.0	0,0,0
2161	0.02	9.57e-03	0.02	126,126,138	0.0	0.0	0.0	0,0,0
2162	0.01	8.35e-03	0.02	130,130,139	0.0	0.0	0.0	0,0,0
2163	0.01	7.85e-03	0.02	126,126,138	0.0	0.0	0.0	0,0,0
2164	0.01	8.18e-03	0.02	130,130,139	0.0	0.0	0.0	0,0,0
2165	0.02	9.27e-03	0.02	126,130,138	0.0	0.0	0.0	0,0,0
2166	0.02	9.61e-03	0.02	126,126,138	0.0	0.0	0.0	0,0,0
2167	0.02	8.86e-03	0.02	130,130,139	0.0	0.0	0.0	0,0,0
2168	0.01	6.76e-03	0.02	126,126,138	0.0	0.0	0.0	0,0,0
2169	0.01	5.94e-03	0.01	126,126,138	0.0	0.0	0.0	0,0,0
2170	0.01	7.39e-03	0.02	130,130,139	0.0	0.0	0.0	0,0,0
2171	0.01	7.87e-03	0.02	130,130,139	0.0	0.0	0.0	0,0,0
2172	0.01	7.60e-03	0.02	130,126,138	0.0	0.0	0.0	0,0,0
2173	0.01	6.82e-03	0.01	130,130,139	0.0	0.0	0.0	0,0,0
2174	0.01	6.43e-03	0.01	126,126,138	0.0	0.0	0.0	0,0,0
2175	0.01	6.88e-03	0.01	126,126,138	0.0	0.0	0.0	0,0,0
2176	0.01	7.67e-03	0.02	126,126,138	0.0	0.0	0.0	0,0,0
2177	0.01	7.81e-03	0.02	126,126,138	0.0	0.0	0.0	0,0,0
2178	0.01	7.41e-03	0.01	126,126,138	0.0	0.0	0.0	0,0,0
2179	0.01	6.55e-03	0.01	126,126,138	0.0	0.0	0.0	0,0,0
2180	9.87e-03	6.15e-03	0.01	126,126,138	0.0	0.0	0.0	0,0,0
2181	0.01	6.63e-03	0.01	126,126,138	0.0	0.0	0.0	0,0,0
2182	0.01	7.50e-03	0.01	126,126,138	0.0	0.0	0.0	0,0,0
2183	0.01	8.09e-03	0.02	126,126,138	0.0	0.0	0.0	0,0,0
2184	0.01	7.80e-03	0.02	126,126,138	0.0	0.0	0.0	0,0,0
2185	0.01	6.99e-03	0.01	126,126,138	0.0	0.0	0.0	0,0,0
2186	0.01	6.54e-03	0.01	126,126,138	0.0	0.0	0.0	0,0,0
2187	0.01	6.92e-03	0.01	130,130,139	0.0	0.0	0.0	0,0,0
2188	0.01	7.69e-03	0.02	130,126,139	0.0	0.0	0.0	0,0,0
2189	0.01	7.93e-03	0.02	130,130,139	0.0	0.0	0.0	0,0,0
2190	0.01	7.44e-03	0.02	130,130,139	0.0	0.0	0.0	0,0,0
2191	0.01	5.97e-03	0.01	126,126,138	0.0	0.0	0.0	0,0,0
2192	9.06e-03	5.10e-03	0.01	130,130,139	0.0	0.0	0.0	0,0,0
2193	9.68e-03	5.56e-03	0.01	130,130,139	0.0	0.0	0.0	0,0,0
2194	9.81e-03	5.74e-03	0.01	130,130,139	0.0	0.0	0.0	0,0,0
2195	9.44e-03	5.56e-03	0.01	130,130,139	0.0	0.0	0.0	0,0,0
2196	8.67e-03	5.13e-03	0.01	130,130,139	0.0	0.0	0.0	0,0,0
2197	8.22e-03	4.89e-03	0.01	130,130,139	0.0	0.0	0.0	0,0,0
2198	8.48e-03	5.10e-03	0.01	130,130,139	0.0	0.0	0.0	0,0,0
2199	9.04e-03	5.49e-03	0.01	130,130,139	0.0	0.0	0.0	0,0,0
2200	8.84e-03	5.50e-03	0.01	130,130,139	0.0	0.0	0.0	0,0,0
2201	8.51e-03	5.30e-03	0.01	130,130,139	0.0	0.0	0.0	0,0,0
2202	7.81e-03	4.86e-03	9.81e-03	130,130,139	0.0	0.0	0.0	0,0,0
2203	7.47e-03	4.65e-03	9.40e-03	130,130,139	0.0	0.0	0.0	0,0,0
2204	7.86e-03	4.89e-03	9.87e-03	130,130,139	0.0	0.0	0.0	0,0,0
2205	8.93e-03	5.45e-03	0.01	130,130,139	0.0	0.0	0.0	0,0,0
2206	9.40e-03	5.70e-03	0.01	130,130,139	0.0	0.0	0.0	0,0,0
2207	9.27e-03	5.57e-03	0.01	130,130,139	0.0	0.0	0.0	0,0,0
2208	8.70e-03	5.18e-03	0.01	130,130,139	0.0	0.0	0.0	0,0,0
2209	8.43e-03	4.96e-03	0.01	130,130,139	0.0	0.0	0.0	0,0,0
2210	8.88e-03	5.21e-03	0.01	130,130,139	0.0	0.0	0.0	0,0,0
2211	9.65e-03	5.63e-03	0.01	130,130,139	0.0	0.0	0.0	0,0,0
2212	0.01	5.80e-03	0.01	130,130,139	0.0	0.0	0.0	0,0,0
2213	9.86e-03	5.62e-03	0.01	130,130,139	0.0	0.0	0.0	0,0,0
2214	9.16e-03	5.13e-03	0.01	130,130,139	0.0	0.0	0.0	0,0,0
2215	8.23e-03	5.15e-03	0.01	130,130,139	0.0	0.0	0.0	0,0,0
2216	7.61e-03	4.35e-03	9.70e-03	130,130,139	0.0	0.0	0.0	0,0,0
2217	7.36e-03	4.27e-03	9.38e-03	130,130,139	0.0	0.0	0.0	0,0,0
2218	7.10e-03	4.16e-03	9.05e-03	130,130,139	0.0	0.0	0.0	0,0,0
2219	6.83e-03	4.03e-03	8.72e-03	130,130,139	0.0	0.0	0.0	0,0,0
2220	6.63e-03	3.94e-03	8.46e-03	130,130,139	0.0	0.0	0.0	0,0,0
2221	6.60e-03	3.95e-03	8.41e-03	130,130,139	0.0	0.0	0.0	0,0,0
2222	6.65e-03	4.01e-03	8.46e-03	130,130,139	0.0	0.0	0.0	0,0,0
2223	6.56e-03	4.00e-03	8.34e-03	130,130,139	0.0	0.0	0.0	0,0,0
2224	6.20e-03	3.86e-03	7.89e-03	130,130,139	0.0	0.0	0.0	0,0,0
2225	6.04e-03	3.76e-03	7.69e-03	130,130,139	0.0	0.0	0.0	0,0,0
2226	5.97e-03	3.71e-03	7.60e-03	130,130,139	0.0	0.0	0.0	0,0,0
2227	6.04e-03	3.76e-03	7.69e-03	130,130,139	0.0	0.0	0.0	0,0,0
2228	6.38e-03	3.89e-03	8.21e-03	130,130,139	0.0	0.0	0.0	0,0,0
2229	6.68e-03	4.04e-03	8.50e-03	130,130,139	0.0	0.0	0.0	0,0,0
2230	6.78e-03	4.05e-03	8.62e-03	130,130,139	0.0	0.0	0.0	0,0,0
2231	6.74e-03	4.00e-03	8.58e-03	130,130,139	0.0	0.0	0.0	0,0,0
2232	6.78e-03	3.99e-03	8.65e-03	130,130,139	0.0	0.0	0.0	0,0,0
2233	6.96e-03	4.08e-03	8.90e-03	130,130,139	0.0	0.0	0.0	0,0,0
2234	7.23e-03	4.21e-03	9.23e-03	130,130,139	0.0	0.0	0.0	0,0,0
2235	7.49e-03	4.31e-03	9.55e-03	130,130,139	0.0	0.0	0.0	0,0,0
2236	7.72e-03	4.38e-03	9.85e-03	130,130,139	0.0	0.0	0.0	0,0,0

2237	8.28e-03	4.59e-03	0.01	130,130,139	0.0	0.0	0.0	0,0,0
2238	7.33e-03	0.01	9.50e-03	130,130,139	0.0	0.0	0.0	0,0,0
2239	6.43e-03	3.70e-03	8.32e-03	126,126,138	0.0	0.0	0.0	0,0,0
2240	6.05e-03	3.52e-03	7.83e-03	126,130,138	0.0	0.0	0.0	0,0,0
2241	5.74e-03	3.41e-03	7.40e-03	130,130,139	0.0	0.0	0.0	0,0,0
2242	5.58e-03	3.33e-03	7.21e-03	130,130,139	0.0	0.0	0.0	0,0,0
2243	5.42e-03	3.26e-03	7.01e-03	130,130,139	0.0	0.0	0.0	0,0,0
2244	5.31e-03	3.22e-03	6.87e-03	130,130,139	0.0	0.0	0.0	0,0,0
2245	5.23e-03	3.19e-03	6.76e-03	130,130,139	0.0	0.0	0.0	0,0,0
2246	5.14e-03	3.14e-03	6.63e-03	130,130,139	0.0	0.0	0.0	0,0,0
2247	4.96e-03	3.09e-03	6.42e-03	130,130,139	0.0	0.0	0.0	0,0,0
2248	4.95e-03	3.08e-03	6.41e-03	130,130,139	0.0	0.0	0.0	0,0,0
2249	4.93e-03	3.07e-03	6.38e-03	130,130,139	0.0	0.0	0.0	0,0,0
2250	4.94e-03	3.07e-03	6.39e-03	130,130,139	0.0	0.0	0.0	0,0,0
2251	4.94e-03	3.08e-03	6.39e-03	130,130,139	0.0	0.0	0.0	0,0,0
2252	5.18e-03	3.16e-03	6.69e-03	130,130,139	0.0	0.0	0.0	0,0,0
2253	5.26e-03	3.19e-03	6.79e-03	130,130,139	0.0	0.0	0.0	0,0,0
2254	5.35e-03	3.22e-03	6.90e-03	130,130,139	0.0	0.0	0.0	0,0,0
2255	5.48e-03	3.27e-03	7.08e-03	130,130,139	0.0	0.0	0.0	0,0,0
2256	5.64e-03	3.34e-03	7.28e-03	130,130,139	0.0	0.0	0.0	0,0,0
2257	5.80e-03	3.42e-03	7.51e-03	126,130,138	0.0	0.0	0.0	0,0,0
2258	6.15e-03	3.55e-03	7.96e-03	126,126,138	0.0	0.0	0.0	0,0,0
2259	6.53e-03	3.74e-03	8.46e-03	126,126,138	0.0	0.0	0.0	0,0,0
2260	7.35e-03	0.01	9.52e-03	130,130,139	0.0	0.0	0.0	0,0,0
2261	6.59e-03	0.02	8.64e-03	126,130,138	0.0	0.0	0.0	0,0,0
2262	6.97e-03	0.01	9.15e-03	126,126,138	0.0	0.0	0.0	0,0,0
2263	6.53e-03	0.01	8.55e-03	126,130,138	0.0	0.0	0.0	0,0,0
2264	6.62e-03	0.01	8.69e-03	126,126,138	0.0	0.0	0.0	0,0,0
2265	6.10e-03	6.52e-03	8.00e-03	126,130,138	0.0	0.0	0.0	0,0,0
2266	6.12e-03	4.41e-03	8.04e-03	126,126,138	0.0	0.0	0.0	0,0,0
2267	5.81e-03	3.48e-03	7.63e-03	126,126,138	0.0	0.0	0.0	0,0,0
2268	5.77e-03	3.45e-03	7.60e-03	126,126,138	0.0	0.0	0.0	0,0,0
2269	5.66e-03	3.39e-03	7.42e-03	126,126,138	0.0	0.0	0.0	0,0,0
2270	5.57e-03	3.32e-03	7.33e-03	126,126,138	0.0	0.0	0.0	0,0,0
2271	5.51e-03	3.30e-03	7.21e-03	126,126,138	0.0	0.0	0.0	0,0,0
2272	5.39e-03	3.17e-03	7.07e-03	126,126,138	0.0	0.0	0.0	0,0,0
2273	5.22e-03	3.11e-03	6.83e-03	126,126,138	0.0	0.0	0.0	0,0,0
2274	5.08e-03	2.98e-03	6.66e-03	126,126,138	0.0	0.0	0.0	0,0,0
2275	4.98e-03	2.96e-03	6.53e-03	126,126,138	0.0	0.0	0.0	0,0,0
2276	4.80e-03	2.83e-03	6.31e-03	126,126,138	0.0	0.0	0.0	0,0,0
2277	4.80e-03	2.85e-03	6.31e-03	126,126,138	0.0	0.0	0.0	0,0,0
2278	4.60e-03	2.74e-03	6.06e-03	126,126,138	0.0	0.0	0.0	0,0,0
2279	4.72e-03	2.80e-03	6.20e-03	126,126,138	0.0	0.0	0.0	0,0,0
2280	4.56e-03	2.69e-03	5.98e-03	126,126,138	0.0	0.0	0.0	0,0,0
2281	4.70e-03	2.80e-03	6.16e-03	126,126,138	0.0	0.0	0.0	0,0,0
2282	4.67e-03	2.77e-03	6.12e-03	126,126,138	0.0	0.0	0.0	0,0,0
2283	4.65e-03	2.76e-03	6.10e-03	126,126,138	0.0	0.0	0.0	0,0,0
2284	4.72e-03	2.80e-03	6.19e-03	126,126,138	0.0	0.0	0.0	0,0,0
2285	4.55e-03	2.70e-03	5.96e-03	126,126,138	0.0	0.0	0.0	0,0,0
2286	4.74e-03	2.81e-03	6.22e-03	126,126,138	0.0	0.0	0.0	0,0,0
2287	4.63e-03	2.75e-03	6.11e-03	126,126,138	0.0	0.0	0.0	0,0,0
2288	4.84e-03	2.87e-03	6.36e-03	126,126,138	0.0	0.0	0.0	0,0,0
2289	4.84e-03	2.84e-03	6.37e-03	126,126,138	0.0	0.0	0.0	0,0,0
2290	5.03e-03	2.98e-03	6.59e-03	126,126,138	0.0	0.0	0.0	0,0,0
2291	5.14e-03	3.00e-03	6.74e-03	126,126,138	0.0	0.0	0.0	0,0,0
2292	5.27e-03	3.14e-03	6.90e-03	126,126,138	0.0	0.0	0.0	0,0,0
2293	5.44e-03	3.19e-03	7.13e-03	126,126,138	0.0	0.0	0.0	0,0,0
2294	5.55e-03	3.31e-03	7.26e-03	126,126,138	0.0	0.0	0.0	0,0,0
2295	5.60e-03	3.32e-03	7.36e-03	126,126,138	0.0	0.0	0.0	0,0,0
2296	5.68e-03	3.39e-03	7.45e-03	126,126,138	0.0	0.0	0.0	0,0,0
2297	5.79e-03	3.44e-03	7.61e-03	126,126,138	0.0	0.0	0.0	0,0,0
2298	5.82e-03	3.47e-03	7.63e-03	126,126,138	0.0	0.0	0.0	0,0,0
2299	6.12e-03	3.61e-03	8.04e-03	126,126,138	0.0	0.0	0.0	0,0,0
2300	6.09e-03	6.20e-03	7.99e-03	126,130,138	0.0	0.0	0.0	0,0,0
2301	6.61e-03	0.01	8.67e-03	126,126,138	0.0	0.0	0.0	0,0,0
2302	6.52e-03	0.01	8.54e-03	126,130,138	0.0	0.0	0.0	0,0,0
2303	6.97e-03	0.01	9.15e-03	126,126,138	0.0	0.0	0.0	0,0,0
2304	6.60e-03	0.02	8.65e-03	126,130,138	0.0	0.0	0.0	0,0,0
2305	0.01	7.49e-03	0.02	130,130,139	0.0	0.0	0.0	0,0,0
2306	0.02	8.89e-03	0.02	130,130,139	0.0	0.0	0.0	0,0,0
2307	0.01	8.01e-03	0.02	130,130,139	0.0	0.0	0.0	0,0,0
2308	0.02	9.13e-03	0.02	130,130,139	0.0	0.0	0.0	0,0,0
2309	0.01	7.60e-03	0.02	130,130,139	0.0	0.0	0.0	0,0,0
2310	0.01	7.50e-03	0.02	130,130,139	0.0	0.0	0.0	0,0,0
2311	0.02	0.01	0.03	130,130,139	0.0	0.0	0.0	0,0,0
2312	0.02	0.01	0.03	130,130,139	0.0	0.0	0.0	0,0,0
2313	0.02	0.01	0.03	130,130,139	0.0	0.0	0.0	0,0,0
2314	0.02	9.83e-03	0.02	130,130,139	0.0	0.0	0.0	0,0,0

2315	0.01	8.45e-03	0.02	130,130,139	0.0	0.0	0.0	0,0,0
2316	0.02	9.65e-03	0.02	130,130,139	0.0	0.0	0.0	0,0,0
2317	0.02	0.01	0.02	130,130,139	0.0	0.0	0.0	0,0,0
2318	0.02	0.01	0.02	130,130,139	0.0	0.0	0.0	0,0,0
2319	0.02	0.01	0.02	130,130,139	0.0	0.0	0.0	0,0,0
2320	0.01	8.59e-03	0.02	130,130,139	0.0	0.0	0.0	0,0,0
2321	0.01	7.46e-03	0.01	130,130,139	0.0	0.0	0.0	0,0,0
2322	0.02	9.09e-03	0.02	130,130,139	0.0	0.0	0.0	0,0,0
2323	0.02	0.01	0.02	130,130,139	0.0	0.0	0.0	0,0,0
2324	0.02	0.01	0.02	130,130,139	0.0	0.0	0.0	0,0,0
2325	0.02	0.01	0.02	130,130,139	0.0	0.0	0.0	0,0,0
2326	0.02	0.01	0.02	130,130,139	0.0	0.0	0.0	0,0,0
2327	0.02	8.72e-03	0.02	130,130,139	0.0	0.0	0.0	0,0,0
2328	0.02	0.01	0.02	130,130,139	0.0	0.0	0.0	0,0,0
2329	0.02	0.01	0.03	130,130,139	0.0	0.0	0.0	0,0,0
2330	0.02	0.01	0.03	130,130,139	0.0	0.0	0.0	0,0,0
2331	0.02	0.01	0.03	130,130,139	0.0	0.0	0.0	0,0,0
2332	0.01	7.62e-03	0.02	130,130,139	0.0	0.0	0.0	0,0,0
2333	0.01	6.49e-03	0.02	126,126,138	0.0	0.0	0.0	0,0,0
2334	0.02	8.52e-03	0.02	130,130,139	0.0	0.0	0.0	0,0,0
2335	0.02	8.68e-03	0.02	130,130,139	0.0	0.0	0.0	0,0,0
2336	0.01	8.13e-03	0.02	130,130,139	0.0	0.0	0.0	0,0,0
2337	0.01	7.08e-03	0.02	130,130,139	0.0	0.0	0.0	0,0,0
2338	0.01	6.43e-03	0.01	130,130,139	0.0	0.0	0.0	0,0,0
2339	0.01	6.97e-03	0.02	130,130,139	0.0	0.0	0.0	0,0,0
2340	0.01	7.79e-03	0.02	130,130,139	0.0	0.0	0.0	0,0,0
2341	0.01	7.94e-03	0.02	130,130,139	0.0	0.0	0.0	0,0,0
2342	0.01	7.24e-03	0.01	130,130,139	0.0	0.0	0.0	0,0,0
2343	9.78e-03	6.09e-03	0.01	130,130,139	0.0	0.0	0.0	0,0,0
2344	9.15e-03	5.70e-03	0.01	126,126,138	0.0	0.0	0.0	0,0,0
2345	0.01	6.34e-03	0.01	130,130,139	0.0	0.0	0.0	0,0,0
2346	0.01	7.55e-03	0.02	130,130,139	0.0	0.0	0.0	0,0,0
2347	0.01	8.24e-03	0.02	130,130,139	0.0	0.0	0.0	0,0,0
2348	0.01	8.06e-03	0.02	130,130,139	0.0	0.0	0.0	0,0,0
2349	0.01	7.23e-03	0.02	130,130,139	0.0	0.0	0.0	0,0,0
2350	0.01	6.68e-03	0.02	130,130,139	0.0	0.0	0.0	0,0,0
2351	0.01	7.33e-03	0.02	130,130,139	0.0	0.0	0.0	0,0,0
2352	0.02	8.37e-03	0.02	130,130,139	0.0	0.0	0.0	0,0,0
2353	0.02	8.90e-03	0.02	130,130,139	0.0	0.0	0.0	0,0,0
2354	0.02	8.73e-03	0.02	130,130,139	0.0	0.0	0.0	0,0,0
2355	0.01	6.62e-03	0.02	126,126,138	0.0	0.0	0.0	0,0,0
2356	0.01	0.01	0.02	130,130,139	0.0	0.0	0.0	0,0,0
2357	0.01	6.16e-03	0.02	130,130,139	0.0	0.0	0.0	0,0,0
2358	0.01	5.93e-03	0.01	130,130,139	0.0	0.0	0.0	0,0,0
2359	0.01	5.62e-03	0.01	130,130,139	0.0	0.0	0.0	0,0,0
2360	9.68e-03	5.24e-03	0.01	130,130,139	0.0	0.0	0.0	0,0,0
2361	9.13e-03	5.00e-03	0.01	130,130,139	0.0	0.0	0.0	0,0,0
2362	9.01e-03	5.03e-03	0.01	130,130,139	0.0	0.0	0.0	0,0,0
2363	9.00e-03	5.15e-03	0.01	130,130,139	0.0	0.0	0.0	0,0,0
2364	8.58e-03	5.13e-03	0.01	130,130,139	0.0	0.0	0.0	0,0,0
2365	7.83e-03	4.85e-03	9.89e-03	130,130,139	0.0	0.0	0.0	0,0,0
2366	7.23e-03	4.50e-03	9.07e-03	130,130,139	0.0	0.0	0.0	0,0,0
2367	6.98e-03	4.34e-03	8.78e-03	130,130,139	0.0	0.0	0.0	0,0,0
2368	7.52e-03	4.53e-03	9.55e-03	130,130,139	0.0	0.0	0.0	0,0,0
2369	8.34e-03	4.92e-03	0.01	130,130,139	0.0	0.0	0.0	0,0,0
2370	9.13e-03	5.24e-03	0.01	130,130,139	0.0	0.0	0.0	0,0,0
2371	9.58e-03	5.34e-03	0.01	130,130,139	0.0	0.0	0.0	0,0,0
2372	9.61e-03	5.23e-03	0.01	130,130,139	0.0	0.0	0.0	0,0,0
2373	9.74e-03	5.20e-03	0.01	130,130,139	0.0	0.0	0.0	0,0,0
2374	0.01	5.44e-03	0.01	130,130,139	0.0	0.0	0.0	0,0,0
2375	0.01	5.81e-03	0.01	130,130,139	0.0	0.0	0.0	0,0,0
2376	0.01	6.11e-03	0.02	130,130,139	0.0	0.0	0.0	0,0,0
2377	0.01	6.33e-03	0.02	130,130,139	0.0	0.0	0.0	0,0,0
2378	0.01	0.01	0.02	130,130,139	0.0	0.0	0.0	0,0,0
2379	0.01	0.01	0.01	130,130,139	0.0	0.0	0.0	0,0,0
2380	9.80e-03	4.99e-03	0.01	130,130,139	0.0	0.0	0.0	0,0,0
2381	8.98e-03	4.70e-03	0.01	130,130,139	0.0	0.0	0.0	0,0,0
2382	8.41e-03	4.49e-03	0.01	130,130,139	0.0	0.0	0.0	0,0,0
2383	8.01e-03	4.34e-03	0.01	130,130,139	0.0	0.0	0.0	0,0,0
2384	7.61e-03	4.19e-03	9.75e-03	130,130,139	0.0	0.0	0.0	0,0,0
2385	7.27e-03	4.08e-03	9.27e-03	130,130,139	0.0	0.0	0.0	0,0,0
2386	7.02e-03	4.02e-03	8.96e-03	130,130,139	0.0	0.0	0.0	0,0,0
2387	6.64e-03	3.90e-03	8.47e-03	130,130,139	0.0	0.0	0.0	0,0,0
2388	6.20e-03	3.74e-03	7.93e-03	130,130,139	0.0	0.0	0.0	0,0,0
2389	5.73e-03	3.57e-03	7.31e-03	130,130,139	0.0	0.0	0.0	0,0,0
2390	5.71e-03	3.56e-03	7.29e-03	130,130,139	0.0	0.0	0.0	0,0,0
2391	6.18e-03	3.72e-03	7.92e-03	130,130,139	0.0	0.0	0.0	0,0,0
2392	6.53e-03	3.85e-03	8.37e-03	130,130,139	0.0	0.0	0.0	0,0,0

2393	7.00e-03	4.01e-03	8.95e-03	130,130,139	0.0	0.0	0.0	0,0,0
2394	7.41e-03	4.14e-03	9.47e-03	130,130,139	0.0	0.0	0.0	0,0,0
2395	7.67e-03	4.21e-03	9.80e-03	130,130,139	0.0	0.0	0.0	0,0,0
2396	8.02e-03	4.33e-03	0.01	130,130,139	0.0	0.0	0.0	0,0,0
2397	8.41e-03	4.47e-03	0.01	130,130,139	0.0	0.0	0.0	0,0,0
2398	8.79e-03	4.62e-03	0.01	130,130,139	0.0	0.0	0.0	0,0,0
2399	9.34e-03	4.82e-03	0.01	130,130,139	0.0	0.0	0.0	0,0,0
2400	0.01	5.10e-03	0.01	130,130,139	0.0	0.0	0.0	0,0,0
2401	0.01	0.01	0.01	130,130,139	0.0	0.0	0.0	0,0,0
2402	8.92e-03	0.01	0.01	130,130,139	0.0	0.0	0.0	0,0,0
2403	8.23e-03	4.33e-03	0.01	126,126,138	0.0	0.0	0.0	0,0,0
2404	7.58e-03	4.04e-03	9.83e-03	126,126,138	0.0	0.0	0.0	0,0,0
2405	7.05e-03	3.84e-03	9.16e-03	126,126,138	0.0	0.0	0.0	0,0,0
2406	6.77e-03	3.74e-03	8.79e-03	130,126,138	0.0	0.0	0.0	0,0,0
2407	6.52e-03	3.65e-03	8.45e-03	126,126,138	0.0	0.0	0.0	0,0,0
2408	6.24e-03	3.54e-03	8.07e-03	126,126,138	0.0	0.0	0.0	0,0,0
2409	5.93e-03	3.42e-03	7.67e-03	126,126,138	0.0	0.0	0.0	0,0,0
2410	5.57e-03	3.29e-03	7.22e-03	130,126,138	0.0	0.0	0.0	0,0,0
2411	5.26e-03	3.39e-03	6.83e-03	130,130,138	0.0	0.0	0.0	0,0,0
2412	5.02e-03	3.13e-03	6.51e-03	126,126,138	0.0	0.0	0.0	0,0,0
2413	5.05e-03	3.14e-03	6.54e-03	126,126,138	0.0	0.0	0.0	0,0,0
2414	5.26e-03	3.20e-03	6.83e-03	130,126,138	0.0	0.0	0.0	0,0,0
2415	5.42e-03	3.39e-03	7.04e-03	130,130,138	0.0	0.0	0.0	0,0,0
2416	5.75e-03	3.34e-03	7.45e-03	130,130,138	0.0	0.0	0.0	0,0,0
2417	6.12e-03	3.47e-03	7.91e-03	126,126,138	0.0	0.0	0.0	0,0,0
2418	6.42e-03	3.60e-03	8.31e-03	126,126,138	0.0	0.0	0.0	0,0,0
2419	6.69e-03	3.71e-03	8.67e-03	130,126,138	0.0	0.0	0.0	0,0,0
2420	6.93e-03	3.79e-03	9.00e-03	130,126,139	0.0	0.0	0.0	0,0,0
2421	7.22e-03	3.89e-03	9.37e-03	126,126,138	0.0	0.0	0.0	0,0,0
2422	7.73e-03	4.10e-03	0.01	126,126,138	0.0	0.0	0.0	0,0,0
2423	8.38e-03	4.38e-03	0.01	126,126,138	0.0	0.0	0.0	0,0,0
2424	8.99e-03	0.01	0.01	130,130,139	0.0	0.0	0.0	0,0,0
2425	6.55e-03	0.01	8.57e-03	126,130,138	0.0	0.0	0.0	0,0,0
2426	6.61e-03	0.01	8.66e-03	126,130,138	0.0	0.0	0.0	0,0,0
2427	6.83e-03	0.01	8.96e-03	126,130,138	0.0	0.0	0.0	0,0,0
2428	6.34e-03	7.24e-03	8.31e-03	126,126,138	0.0	0.0	0.0	0,0,0
2429	6.47e-03	4.59e-03	8.49e-03	126,130,138	0.0	0.0	0.0	0,0,0
2430	5.84e-03	3.36e-03	7.66e-03	126,126,138	0.0	0.0	0.0	0,0,0
2431	6.20e-03	3.65e-03	8.15e-03	126,126,138	0.0	0.0	0.0	0,0,0
2432	5.49e-03	3.19e-03	7.21e-03	126,126,138	0.0	0.0	0.0	0,0,0
2433	6.20e-03	3.64e-03	8.15e-03	126,126,138	0.0	0.0	0.0	0,0,0
2434	5.29e-03	3.09e-03	6.94e-03	126,126,138	0.0	0.0	0.0	0,0,0
2435	6.16e-03	3.61e-03	8.07e-03	126,126,138	0.0	0.0	0.0	0,0,0
2436	5.18e-03	2.96e-03	6.77e-03	126,126,138	0.0	0.0	0.0	0,0,0
2437	5.86e-03	3.43e-03	7.65e-03	126,126,138	0.0	0.0	0.0	0,0,0
2438	4.90e-03	2.74e-03	6.39e-03	126,126,138	0.0	0.0	0.0	0,0,0
2439	5.56e-03	3.24e-03	7.27e-03	126,126,138	0.0	0.0	0.0	0,0,0
2440	4.78e-03	2.69e-03	6.25e-03	126,126,138	0.0	0.0	0.0	0,0,0
2441	5.28e-03	3.09e-03	6.93e-03	126,126,138	0.0	0.0	0.0	0,0,0
2442	4.79e-03	2.73e-03	6.27e-03	126,126,138	0.0	0.0	0.0	0,0,0
2443	5.10e-03	3.00e-03	6.70e-03	126,126,138	0.0	0.0	0.0	0,0,0
2444	4.97e-03	2.85e-03	6.50e-03	126,126,138	0.0	0.0	0.0	0,0,0
2445	5.16e-03	3.00e-03	6.77e-03	126,126,138	0.0	0.0	0.0	0,0,0
2446	5.19e-03	3.00e-03	6.79e-03	126,126,138	0.0	0.0	0.0	0,0,0
2447	5.16e-03	2.98e-03	6.76e-03	126,126,138	0.0	0.0	0.0	0,0,0
2448	5.20e-03	3.03e-03	6.83e-03	126,126,138	0.0	0.0	0.0	0,0,0
2449	4.94e-03	2.83e-03	6.47e-03	126,126,138	0.0	0.0	0.0	0,0,0
2450	5.19e-03	3.04e-03	6.83e-03	126,126,138	0.0	0.0	0.0	0,0,0
2451	4.80e-03	2.71e-03	6.28e-03	126,126,138	0.0	0.0	0.0	0,0,0
2452	5.38e-03	3.14e-03	7.06e-03	126,126,138	0.0	0.0	0.0	0,0,0
2453	4.78e-03	2.69e-03	6.26e-03	126,126,138	0.0	0.0	0.0	0,0,0
2454	5.65e-03	3.29e-03	7.39e-03	126,126,138	0.0	0.0	0.0	0,0,0
2455	4.93e-03	2.78e-03	6.44e-03	126,126,138	0.0	0.0	0.0	0,0,0
2456	5.93e-03	3.46e-03	7.74e-03	126,126,138	0.0	0.0	0.0	0,0,0
2457	5.20e-03	2.98e-03	6.80e-03	126,126,138	0.0	0.0	0.0	0,0,0
2458	6.20e-03	3.62e-03	8.12e-03	126,126,138	0.0	0.0	0.0	0,0,0
2459	5.32e-03	3.09e-03	6.98e-03	126,126,138	0.0	0.0	0.0	0,0,0
2460	6.21e-03	3.63e-03	8.15e-03	126,126,138	0.0	0.0	0.0	0,0,0
2461	5.50e-03	3.19e-03	7.23e-03	126,126,138	0.0	0.0	0.0	0,0,0
2462	6.19e-03	3.63e-03	8.13e-03	126,126,138	0.0	0.0	0.0	0,0,0
2463	5.84e-03	3.34e-03	7.66e-03	126,126,138	0.0	0.0	0.0	0,0,0
2464	6.45e-03	3.77e-03	8.46e-03	126,126,138	0.0	0.0	0.0	0,0,0
2465	6.33e-03	6.43e-03	8.30e-03	126,121,138	0.0	0.0	0.0	0,0,0
2466	6.81e-03	9.22e-03	8.94e-03	126,130,138	0.0	0.0	0.0	0,0,0
2467	6.61e-03	0.01	8.65e-03	126,130,138	0.0	0.0	0.0	0,0,0
2468	6.55e-03	0.01	8.58e-03	126,130,138	0.0	0.0	0.0	0,0,0
2689	0.02	0.01	0.02	130,126,138	0.0	0.0	0.0	0,0,0
2690	0.01	8.02e-03	0.01	130,121,139	0.0	0.0	0.0	0,0,0

2691	0.01	6.91e-03	0.01	130,130,139	0.0	0.0	0.0	0,0,0
2692	0.01	9.74e-03	0.02	130,121,139	0.0	0.0	0.0	0,0,0
2693	0.02	0.02	0.02	126,126,138	0.0	0.0	0.0	0,0,0
2694	0.02	9.99e-03	0.02	130,121,139	0.0	0.0	0.0	0,0,0
2695	0.02	0.01	0.02	130,130,139	0.0	0.0	0.0	0,0,0
2696	0.02	0.01	0.02	130,130,139	0.0	0.0	0.0	0,0,0
2697	0.02	0.01	0.02	130,130,139	0.0	0.0	0.0	0,0,0
2698	0.01	8.22e-03	0.02	130,130,139	0.0	0.0	0.0	0,0,0
2699	0.01	6.82e-03	0.02	130,130,139	0.0	0.0	0.0	0,0,0
2700	0.01	8.55e-03	0.02	130,130,139	0.0	0.0	0.0	0,0,0
2701	0.02	0.01	0.02	130,130,139	0.0	0.0	0.0	0,0,0
2702	0.02	0.01	0.02	130,130,139	0.0	0.0	0.0	0,0,0
2703	0.02	0.01	0.02	130,130,139	0.0	0.0	0.0	0,0,0
2704	0.01	7.98e-03	0.02	130,130,139	0.0	0.0	0.0	0,0,0
2705	0.01	6.36e-03	0.01	130,130,139	0.0	0.0	0.0	0,0,0
2706	0.01	8.32e-03	0.02	130,130,139	0.0	0.0	0.0	0,0,0
2707	0.02	0.01	0.02	130,130,139	0.0	0.0	0.0	0,0,0
2708	0.02	0.01	0.03	130,130,139	0.0	0.0	0.0	0,0,0
2709	0.02	0.01	0.02	130,130,139	0.0	0.0	0.0	0,0,0
2710	0.02	9.12e-03	0.02	130,130,139	0.0	0.0	0.0	0,0,0
2711	0.01	7.18e-03	0.02	130,130,139	0.0	0.0	0.0	0,0,0
2712	0.01	8.22e-03	0.02	130,130,139	0.0	0.0	0.0	0,0,0
2713	0.02	0.01	0.02	130,130,139	0.0	0.0	0.0	0,0,0
2714	0.02	0.01	0.02	130,130,139	0.0	0.0	0.0	0,0,0
2715	0.02	0.01	0.02	130,130,139	0.0	0.0	0.0	0,0,0
2716	0.02	0.01	0.02	130,121,139	0.0	0.0	0.0	0,0,0
2717	0.01	0.01	0.02	130,126,139	0.0	0.0	0.0	0,0,0
2718	0.01	8.41e-03	0.02	130,123,139	0.0	0.0	0.0	0,0,0
2719	0.01	7.41e-03	0.02	130,130,139	0.0	0.0	0.0	0,0,0
2720	0.01	6.70e-03	0.02	130,130,139	0.0	0.0	0.0	0,0,0
2721	9.77e-03	5.33e-03	0.01	130,130,139	0.0	0.0	0.0	0,0,0
2722	8.94e-03	4.78e-03	0.01	130,130,139	0.0	0.0	0.0	0,0,0
2723	0.01	5.56e-03	0.01	130,130,139	0.0	0.0	0.0	0,0,0
2724	0.01	6.64e-03	0.01	130,130,139	0.0	0.0	0.0	0,0,0
2725	0.01	6.84e-03	0.01	130,130,139	0.0	0.0	0.0	0,0,0
2726	9.39e-03	5.85e-03	0.01	130,130,139	0.0	0.0	0.0	0,0,0
2727	7.62e-03	4.62e-03	9.10e-03	130,130,139	0.0	0.0	0.0	0,0,0
2728	6.43e-03	3.91e-03	7.81e-03	130,130,139	0.0	0.0	0.0	0,0,0
2729	7.36e-03	4.58e-03	9.29e-03	130,130,139	0.0	0.0	0.0	0,0,0
2730	0.01	6.27e-03	0.01	130,130,139	0.0	0.0	0.0	0,0,0
2731	0.01	7.17e-03	0.02	130,130,139	0.0	0.0	0.0	0,0,0
2732	0.01	6.94e-03	0.02	130,130,139	0.0	0.0	0.0	0,0,0
2733	0.01	5.84e-03	0.01	130,130,139	0.0	0.0	0.0	0,0,0
2734	9.83e-03	5.07e-03	0.01	130,130,139	0.0	0.0	0.0	0,0,0
2735	0.01	5.62e-03	0.01	130,130,139	0.0	0.0	0.0	0,0,0
2736	0.01	6.98e-03	0.02	130,130,139	0.0	0.0	0.0	0,0,0
2737	0.01	8.33e-03	0.02	130,123,139	0.0	0.0	0.0	0,0,0
2738	0.02	9.82e-03	0.02	130,123,139	0.0	0.0	0.0	0,0,0
2739	0.01	0.01	0.02	130,126,139	0.0	0.0	0.0	0,0,0
2740	9.56e-03	0.02	0.01	130,130,139	0.0	0.0	0.0	0,0,0
2741	8.65e-03	4.22e-03	0.01	130,130,139	0.0	0.0	0.0	0,0,0
2742	8.00e-03	4.09e-03	0.01	130,130,139	0.0	0.0	0.0	0,0,0
2743	7.36e-03	3.81e-03	9.21e-03	130,130,139	0.0	0.0	0.0	0,0,0
2744	6.48e-03	7.20e-03	8.11e-03	130,123,139	0.0	0.0	0.0	0,0,0
2745	5.89e-03	9.79e-03	7.34e-03	130,130,139	0.0	0.0	0.0	0,0,0
2746	5.83e-03	6.28e-03	7.22e-03	130,123,139	0.0	0.0	0.0	0,0,0
2747	5.99e-03	3.85e-03	7.37e-03	130,130,139	0.0	0.0	0.0	0,0,0
2748	5.82e-03	3.85e-03	7.13e-03	130,130,139	0.0	0.0	0.0	0,0,0
2749	5.15e-03	3.69e-03	6.31e-03	130,130,139	0.0	0.0	0.0	0,0,0
2750	4.11e-03	5.56e-03	4.99e-03	130,123,139	0.0	0.0	0.0	0,0,0
2751	4.13e-03	8.15e-03	5.03e-03	130,130,139	0.0	0.0	0.0	0,0,0
2752	4.74e-03	6.49e-03	5.85e-03	130,123,139	0.0	0.0	0.0	0,0,0
2753	5.72e-03	4.90e-03	7.06e-03	130,130,139	0.0	0.0	0.0	0,0,0
2754	6.38e-03	5.24e-03	7.88e-03	130,130,139	0.0	0.0	0.0	0,0,0
2755	6.57e-03	5.24e-03	8.14e-03	130,130,139	0.0	0.0	0.0	0,0,0
2756	6.46e-03	7.62e-03	8.04e-03	130,123,139	0.0	0.0	0.0	0,0,0
2757	6.53e-03	0.01	8.19e-03	130,130,139	0.0	0.0	0.0	0,0,0
2758	7.12e-03	8.01e-03	8.96e-03	130,123,139	0.0	0.0	0.0	0,0,0
2759	7.99e-03	4.14e-03	0.01	130,123,139	0.0	0.0	0.0	0,0,0
2760	8.61e-03	4.29e-03	0.01	130,130,139	0.0	0.0	0.0	0,0,0
2761	9.23e-03	4.42e-03	0.01	130,130,139	0.0	0.0	0.0	0,0,0
2762	0.01	0.02	0.01	130,130,139	0.0	0.0	0.0	0,0,0
2763	7.59e-03	0.02	9.78e-03	130,130,139	0.0	0.0	0.0	0,0,0
2764	5.80e-03	3.40e-03	7.32e-03	130,123,139	0.0	0.0	0.0	0,0,0
2765	5.20e-03	3.15e-03	6.56e-03	130,123,139	0.0	0.0	0.0	0,0,0
2766	4.89e-03	5.08e-03	6.14e-03	130,124,139	0.0	0.0	0.0	0,0,0
2767	4.56e-03	6.99e-03	5.72e-03	130,130,139	0.0	0.0	0.0	0,0,0
2768	4.15e-03	8.20e-03	5.16e-03	130,130,139	0.0	0.0	0.0	0,0,0

2769	3.86e-03	7.17e-03	4.77e-03	130,130,139	0.0	0.0	0.0	0,0,0
2770	3.71e-03	6.50e-03	4.58e-03	130,130,139	0.0	0.0	0.0	0,0,0
2771	3.51e-03	6.33e-03	4.32e-03	130,130,139	0.0	0.0	0.0	0,0,0
2772	3.35e-03	6.26e-03	4.03e-03	130,130,139	0.0	0.0	0.0	0,0,0
2773	3.32e-03	6.72e-03	4.00e-03	130,130,139	0.0	0.0	0.0	0,0,0
2774	3.39e-03	7.82e-03	4.08e-03	130,130,139	0.0	0.0	0.0	0,0,0
2775	3.32e-03	7.40e-03	4.05e-03	130,130,139	0.0	0.0	0.0	0,0,0
2776	3.61e-03	7.18e-03	4.46e-03	130,130,139	0.0	0.0	0.0	0,0,0
2777	3.87e-03	7.40e-03	4.79e-03	130,130,139	0.0	0.0	0.0	0,0,0
2778	4.09e-03	7.57e-03	5.07e-03	130,130,139	0.0	0.0	0.0	0,0,0
2779	4.24e-03	8.14e-03	5.27e-03	130,130,139	0.0	0.0	0.0	0,0,0
2780	4.54e-03	8.98e-03	5.68e-03	130,130,139	0.0	0.0	0.0	0,0,0
2781	4.95e-03	7.41e-03	6.24e-03	130,130,139	0.0	0.0	0.0	0,0,0
2782	5.28e-03	5.34e-03	6.67e-03	130,124,139	0.0	0.0	0.0	0,0,0
2783	5.59e-03	3.34e-03	7.06e-03	130,123,139	0.0	0.0	0.0	0,0,0
2784	6.16e-03	3.49e-03	7.83e-03	130,123,139	0.0	0.0	0.0	0,0,0
2785	7.82e-03	0.02	0.01	130,130,139	0.0	0.0	0.0	0,0,0
2786	5.94e-03	0.01	7.62e-03	130,130,139	0.0	0.0	0.0	0,0,0
2787	3.92e-03	2.17e-03	5.13e-03	126,126,138	0.0	0.0	0.0	0,0,0
2788	3.61e-03	2.60e-03	4.71e-03	126,130,138	0.0	0.0	0.0	0,0,0
2789	3.37e-03	3.20e-03	4.39e-03	126,130,138	0.0	0.0	0.0	0,0,0
2790	3.19e-03	3.86e-03	4.15e-03	126,130,138	0.0	0.0	0.0	0,0,0
2791	3.01e-03	5.30e-03	3.92e-03	126,130,138	0.0	0.0	0.0	0,0,0
2792	2.77e-03	6.17e-03	3.61e-03	126,130,138	0.0	0.0	0.0	0,0,0
2793	2.62e-03	6.55e-03	3.40e-03	130,130,138	0.0	0.0	0.0	0,0,0
2794	2.57e-03	5.77e-03	3.32e-03	130,130,138	0.0	0.0	0.0	0,0,0
2795	2.54e-03	5.51e-03	3.28e-03	130,130,138	0.0	0.0	0.0	0,0,0
2796	2.50e-03	5.69e-03	3.21e-03	130,130,138	0.0	0.0	0.0	0,0,0
2797	2.52e-03	5.26e-03	3.09e-03	130,130,138	0.0	0.0	0.0	0,0,0
2798	2.50e-03	5.64e-03	3.17e-03	130,130,138	0.0	0.0	0.0	0,0,0
2799	2.54e-03	5.68e-03	3.24e-03	130,130,138	0.0	0.0	0.0	0,0,0
2800	2.57e-03	6.43e-03	3.29e-03	130,130,138	0.0	0.0	0.0	0,0,0
2801	2.64e-03	7.08e-03	3.37e-03	130,130,138	0.0	0.0	0.0	0,0,0
2802	2.75e-03	6.56e-03	3.58e-03	126,130,138	0.0	0.0	0.0	0,0,0
2803	2.99e-03	5.41e-03	3.89e-03	126,130,138	0.0	0.0	0.0	0,0,0
2804	3.16e-03	3.77e-03	4.12e-03	126,130,138	0.0	0.0	0.0	0,0,0
2805	3.34e-03	3.06e-03	4.35e-03	126,130,138	0.0	0.0	0.0	0,0,0
2806	3.57e-03	2.45e-03	4.67e-03	126,130,138	0.0	0.0	0.0	0,0,0
2807	3.90e-03	2.16e-03	5.09e-03	126,126,138	0.0	0.0	0.0	0,0,0
2808	5.96e-03	0.01	7.64e-03	130,130,139	0.0	0.0	0.0	0,0,0
2809	4.22e-03	0.02	5.45e-03	130,123,139	0.0	0.0	0.0	0,0,0
2810	4.28e-03	8.60e-03	5.60e-03	126,123,138	0.0	0.0	0.0	0,0,0
2811	4.24e-03	0.01	5.50e-03	126,123,138	0.0	0.0	0.0	0,0,0
2812	4.32e-03	5.84e-03	5.67e-03	126,121,138	0.0	0.0	0.0	0,0,0
2813	4.18e-03	6.46e-03	5.42e-03	126,123,138	0.0	0.0	0.0	0,0,0
2814	4.17e-03	2.46e-03	5.49e-03	126,126,138	0.0	0.0	0.0	0,0,0
2815	4.15e-03	2.54e-03	5.37e-03	130,126,139	0.0	0.0	0.0	0,0,0
2816	4.10e-03	2.45e-03	5.39e-03	126,126,138	0.0	0.0	0.0	0,0,0
2817	4.09e-03	2.49e-03	5.45e-03	121,121,138	0.0	0.0	0.0	0,0,0
2818	4.05e-03	2.42e-03	5.32e-03	126,126,138	0.0	0.0	0.0	0,0,0
2819	4.06e-03	2.48e-03	5.07e-03	126,126,138	0.0	0.0	0.0	0,0,0
2820	3.96e-03	2.36e-03	5.20e-03	126,126,138	0.0	0.0	0.0	0,0,0
2821	3.93e-03	2.40e-03	5.06e-03	126,126,138	0.0	0.0	0.0	0,0,0
2822	3.78e-03	2.26e-03	4.96e-03	126,126,138	0.0	0.0	0.0	0,0,0
2823	3.83e-03	2.33e-03	4.94e-03	126,126,138	0.0	0.0	0.0	0,0,0
2824	3.65e-03	2.21e-03	4.79e-03	126,126,138	0.0	0.0	0.0	0,0,0
2825	3.77e-03	2.33e-03	4.87e-03	126,130,139	0.0	0.0	0.0	0,0,0
2826	3.51e-03	2.19e-03	4.59e-03	126,126,138	0.0	0.0	0.0	0,0,0
2827	3.78e-03	2.35e-03	4.91e-03	130,130,139	0.0	0.0	0.0	0,0,0
2828	3.63e-03	2.24e-03	4.72e-03	130,126,139	0.0	0.0	0.0	0,0,0
2829	3.85e-03	2.36e-03	5.01e-03	130,130,139	0.0	0.0	0.0	0,0,0
2830	3.85e-03	2.35e-03	5.00e-03	130,130,139	0.0	0.0	0.0	0,0,0
2831	3.88e-03	2.37e-03	5.05e-03	130,130,139	0.0	0.0	0.0	0,0,0
2832	3.88e-03	2.38e-03	5.06e-03	130,130,139	0.0	0.0	0.0	0,0,0
2833	3.65e-03	2.27e-03	4.83e-03	126,126,139	0.0	0.0	0.0	0,0,0
2834	3.87e-03	2.41e-03	5.02e-03	130,130,139	0.0	0.0	0.0	0,0,0
2835	3.61e-03	2.25e-03	4.71e-03	126,126,138	0.0	0.0	0.0	0,0,0
2836	3.87e-03	2.39e-03	5.00e-03	126,130,139	0.0	0.0	0.0	0,0,0
2837	3.74e-03	2.27e-03	4.91e-03	126,126,138	0.0	0.0	0.0	0,0,0
2838	3.97e-03	2.43e-03	5.08e-03	130,130,138	0.0	0.0	0.0	0,0,0
2839	3.86e-03	2.31e-03	5.06e-03	126,126,138	0.0	0.0	0.0	0,0,0
2840	4.03e-03	2.45e-03	5.21e-03	126,126,138	0.0	0.0	0.0	0,0,0
2841	4.01e-03	2.39e-03	5.26e-03	126,126,138	0.0	0.0	0.0	0,0,0
2842	4.13e-03	2.51e-03	5.32e-03	126,126,138	0.0	0.0	0.0	0,0,0
2843	4.07e-03	2.42e-03	5.34e-03	126,126,138	0.0	0.0	0.0	0,0,0
2844	4.13e-03	2.51e-03	5.34e-03	130,130,139	0.0	0.0	0.0	0,0,0
2845	4.10e-03	2.44e-03	5.40e-03	126,126,138	0.0	0.0	0.0	0,0,0
2846	4.15e-03	2.52e-03	5.37e-03	130,126,139	0.0	0.0	0.0	0,0,0

2847	4.17e-03	2.44e-03	5.48e-03	126,126,138	0.0	0.0	0.0	0,0,0
2848	4.17e-03	6.34e-03	5.39e-03	126,123,138	0.0	0.0	0.0	0,0,0
2849	4.30e-03	5.06e-03	5.65e-03	126,121,138	0.0	0.0	0.0	0,0,0
2850	4.22e-03	0.01	5.46e-03	126,123,138	0.0	0.0	0.0	0,0,0
2851	4.28e-03	7.84e-03	5.59e-03	126,123,138	0.0	0.0	0.0	0,0,0
2852	4.20e-03	0.02	5.43e-03	130,123,139	0.0	0.0	0.0	0,0,0
2853	0.03	0.01	0.03	130,130,139	0.0	0.0	0.0	0,0,0
2854	0.02	0.01	0.03	130,130,139	0.0	0.0	0.0	0,0,0
2855	0.02	0.01	0.02	130,130,139	0.0	0.0	0.0	0,0,0
2856	0.02	0.01	0.03	130,130,139	0.0	0.0	0.0	0,0,0
2857	0.03	0.01	0.04	130,130,139	0.0	0.0	0.0	0,0,0
2858	0.03	0.03	0.03	130,130,139	0.0	0.0	0.0	0,0,0
2859	0.04	0.07	0.05	130,130,139	0.0	0.0	0.0	0,0,0
2860	0.05	0.08	0.06	130,130,139	0.0	0.0	0.0	0,0,0
2861	0.04	0.07	0.05	130,130,139	0.0	0.0	0.0	0,0,0
2862	0.03	0.04	0.03	130,130,139	0.0	0.0	0.0	0,0,0
2863	0.02	0.02	0.02	130,130,139	0.0	0.0	0.0	0,0,0
2864	0.03	0.05	0.04	130,130,139	0.0	0.0	0.0	0,0,0
2865	0.05	0.08	0.06	130,130,139	0.0	0.0	0.0	0,0,0
2866	0.05	0.09	0.06	130,130,139	0.0	0.0	0.0	0,0,0
2867	0.04	0.07	0.05	130,130,139	0.0	0.0	0.0	0,0,0
2868	0.03	0.03	0.03	130,130,139	0.0	0.0	0.0	0,0,0
2869	0.02	0.01	0.02	130,130,139	0.0	0.0	0.0	0,0,0
2870	0.03	0.04	0.03	130,130,139	0.0	0.0	0.0	0,0,0
2871	0.04	0.07	0.05	130,130,139	0.0	0.0	0.0	0,0,0
2872	0.05	0.09	0.06	130,130,139	0.0	0.0	0.0	0,0,0
2873	0.05	0.08	0.06	130,130,139	0.0	0.0	0.0	0,0,0
2874	0.03	0.05	0.04	130,130,139	0.0	0.0	0.0	0,0,0
2875	0.02	0.03	0.02	130,130,139	0.0	0.0	0.0	0,0,0
2876	0.03	0.04	0.03	130,130,139	0.0	0.0	0.0	0,0,0
2877	0.04	0.07	0.05	130,130,139	0.0	0.0	0.0	0,0,0
2878	0.05	0.09	0.06	130,130,139	0.0	0.0	0.0	0,0,0
2879	0.04	0.07	0.05	130,130,139	0.0	0.0	0.0	0,0,0
2880	0.03	0.03	0.03	130,130,139	0.0	0.0	0.0	0,0,0
2881	0.01	0.03	0.02	130,130,139	0.0	0.0	0.0	0,0,0
2882	9.59e-03	0.02	0.01	130,130,139	0.0	0.0	0.0	0,0,0
2883	9.89e-03	0.03	0.01	130,130,139	0.0	0.0	0.0	0,0,0
2884	8.62e-03	0.03	0.01	130,130,139	0.0	0.0	0.0	0,0,0
2885	6.00e-03	0.02	7.19e-03	130,130,139	0.0	0.0	0.0	0,0,0
2886	5.21e-03	0.02	6.41e-03	126,130,138	0.0	0.0	0.0	0,0,0
2887	6.44e-03	0.02	7.65e-03	130,130,139	0.0	0.0	0.0	0,0,0
2888	9.13e-03	0.03	0.01	130,130,139	0.0	0.0	0.0	0,0,0
2889	9.70e-03	0.03	0.01	130,130,139	0.0	0.0	0.0	0,0,0
2890	8.30e-03	0.03	9.75e-03	130,130,139	0.0	0.0	0.0	0,0,0
2891	5.41e-03	0.02	6.38e-03	130,130,139	0.0	0.0	0.0	0,0,0
2892	4.24e-03	0.02	5.14e-03	126,130,138	0.0	0.0	0.0	0,0,0
2893	5.60e-03	0.02	6.64e-03	130,130,139	0.0	0.0	0.0	0,0,0
2894	8.52e-03	0.03	0.01	130,130,139	0.0	0.0	0.0	0,0,0
2895	9.81e-03	0.04	0.01	130,130,139	0.0	0.0	0.0	0,0,0
2896	9.32e-03	0.03	0.01	130,130,139	0.0	0.0	0.0	0,0,0
2897	6.55e-03	0.03	7.80e-03	130,130,139	0.0	0.0	0.0	0,0,0
2898	5.62e-03	0.02	6.95e-03	126,130,138	0.0	0.0	0.0	0,0,0
2899	6.19e-03	0.02	7.44e-03	130,130,139	0.0	0.0	0.0	0,0,0
2900	8.81e-03	0.03	0.01	130,130,139	0.0	0.0	0.0	0,0,0
2901	0.01	0.03	0.01	130,130,139	0.0	0.0	0.0	0,0,0
2902	0.01	0.02	0.01	130,130,139	0.0	0.0	0.0	0,0,0
2903	0.02	0.03	0.02	130,130,139	0.0	0.0	0.0	0,0,0
2904	6.78e-03	0.02	8.49e-03	126,130,138	0.0	0.0	0.0	0,0,0
2905	5.38e-03	0.01	6.77e-03	126,130,138	0.0	0.0	0.0	0,0,0
2906	5.01e-03	0.01	6.16e-03	130,130,139	0.0	0.0	0.0	0,0,0
2907	4.95e-03	0.01	6.09e-03	130,130,139	0.0	0.0	0.0	0,0,0
2908	4.85e-03	0.01	5.96e-03	130,130,139	0.0	0.0	0.0	0,0,0
2909	4.72e-03	0.01	5.78e-03	126,130,138	0.0	0.0	0.0	0,0,0
2910	4.42e-03	0.01	5.37e-03	130,130,139	0.0	0.0	0.0	0,0,0
2911	4.42e-03	0.02	5.36e-03	130,130,139	0.0	0.0	0.0	0,0,0
2912	4.37e-03	0.02	5.29e-03	130,130,139	0.0	0.0	0.0	0,0,0
2913	4.14e-03	0.02	5.00e-03	130,130,139	0.0	0.0	0.0	0,0,0
2914	3.74e-03	0.01	4.49e-03	130,130,139	0.0	0.0	0.0	0,0,0
2915	3.78e-03	0.01	4.54e-03	130,130,139	0.0	0.0	0.0	0,0,0
2916	4.06e-03	0.01	4.90e-03	130,130,139	0.0	0.0	0.0	0,0,0
2917	4.39e-03	0.02	5.33e-03	130,130,139	0.0	0.0	0.0	0,0,0
2918	4.63e-03	0.02	5.64e-03	130,130,139	0.0	0.0	0.0	0,0,0
2919	4.69e-03	0.02	5.71e-03	130,130,139	0.0	0.0	0.0	0,0,0
2920	4.69e-03	0.01	5.77e-03	130,130,139	0.0	0.0	0.0	0,0,0
2921	5.15e-03	0.01	6.37e-03	126,130,138	0.0	0.0	0.0	0,0,0
2922	5.26e-03	0.01	6.53e-03	130,130,139	0.0	0.0	0.0	0,0,0
2923	5.34e-03	0.01	6.62e-03	130,130,139	0.0	0.0	0.0	0,0,0
2924	5.35e-03	0.01	6.68e-03	130,130,139	0.0	0.0	0.0	0,0,0

2925	5.82e-03	0.01	7.47e-03	126,130,138	0.0	0.0	0.0	0,0,0
2926	7.06e-03	0.02	8.89e-03	126,130,138	0.0	0.0	0.0	0,0,0
2927	5.56e-03	0.02	6.94e-03	130,130,139	0.0	0.0	0.0	0,0,0
2928	4.76e-03	4.42e-03	5.88e-03	130,130,139	0.0	0.0	0.0	0,0,0
2929	4.52e-03	6.09e-03	5.55e-03	130,130,139	0.0	0.0	0.0	0,0,0
2930	4.43e-03	6.96e-03	5.42e-03	130,130,139	0.0	0.0	0.0	0,0,0
2931	4.27e-03	6.39e-03	5.21e-03	130,130,139	0.0	0.0	0.0	0,0,0
2932	4.14e-03	6.65e-03	5.02e-03	130,130,139	0.0	0.0	0.0	0,0,0
2933	3.91e-03	7.23e-03	4.72e-03	130,130,139	0.0	0.0	0.0	0,0,0
2934	3.84e-03	9.12e-03	4.61e-03	130,130,139	0.0	0.0	0.0	0,0,0
2935	3.76e-03	9.95e-03	4.51e-03	130,130,139	0.0	0.0	0.0	0,0,0
2936	3.56e-03	8.66e-03	4.25e-03	130,130,139	0.0	0.0	0.0	0,0,0
2937	3.21e-03	6.76e-03	3.80e-03	130,130,139	0.0	0.0	0.0	0,0,0
2938	3.25e-03	6.76e-03	3.86e-03	130,130,139	0.0	0.0	0.0	0,0,0
2939	3.53e-03	7.66e-03	4.23e-03	130,130,139	0.0	0.0	0.0	0,0,0
2940	3.80e-03	9.92e-03	4.58e-03	130,130,139	0.0	0.0	0.0	0,0,0
2941	4.03e-03	0.01	4.86e-03	130,130,139	0.0	0.0	0.0	0,0,0
2942	4.11e-03	0.01	4.97e-03	130,130,139	0.0	0.0	0.0	0,0,0
2943	4.18e-03	8.07e-03	5.08e-03	130,130,139	0.0	0.0	0.0	0,0,0
2944	4.41e-03	7.06e-03	5.38e-03	130,130,139	0.0	0.0	0.0	0,0,0
2945	4.53e-03	6.41e-03	5.55e-03	130,130,139	0.0	0.0	0.0	0,0,0
2946	4.69e-03	6.81e-03	5.76e-03	130,130,139	0.0	0.0	0.0	0,0,0
2947	4.77e-03	5.83e-03	5.87e-03	130,130,139	0.0	0.0	0.0	0,0,0
2948	4.98e-03	4.12e-03	6.18e-03	130,130,139	0.0	0.0	0.0	0,0,0
2949	5.70e-03	0.02	7.13e-03	130,130,139	0.0	0.0	0.0	0,0,0
2950	4.46e-03	0.01	5.58e-03	130,130,139	0.0	0.0	0.0	0,0,0
2951	3.23e-03	4.84e-03	3.98e-03	130,130,139	0.0	0.0	0.0	0,0,0
2952	3.05e-03	4.79e-03	3.72e-03	130,130,139	0.0	0.0	0.0	0,0,0
2953	2.94e-03	5.03e-03	3.57e-03	130,130,139	0.0	0.0	0.0	0,0,0
2954	2.78e-03	4.30e-03	3.39e-03	130,130,139	0.0	0.0	0.0	0,0,0
2955	2.69e-03	4.33e-03	3.26e-03	130,130,139	0.0	0.0	0.0	0,0,0
2956	2.55e-03	5.07e-03	3.08e-03	130,130,139	0.0	0.0	0.0	0,0,0
2957	2.52e-03	5.88e-03	3.03e-03	130,130,139	0.0	0.0	0.0	0,0,0
2958	2.48e-03	5.62e-03	2.97e-03	130,130,139	0.0	0.0	0.0	0,0,0
2959	2.36e-03	4.50e-03	2.83e-03	130,130,139	0.0	0.0	0.0	0,0,0
2960	2.18e-03	4.01e-03	2.62e-03	130,130,139	0.0	0.0	0.0	0,0,0
2961	2.21e-03	3.65e-03	2.66e-03	130,130,139	0.0	0.0	0.0	0,0,0
2962	2.32e-03	3.65e-03	2.79e-03	130,130,139	0.0	0.0	0.0	0,0,0
2963	2.46e-03	5.12e-03	2.96e-03	130,130,139	0.0	0.0	0.0	0,0,0
2964	2.60e-03	6.38e-03	3.13e-03	130,130,139	0.0	0.0	0.0	0,0,0
2965	2.65e-03	6.47e-03	3.19e-03	130,130,139	0.0	0.0	0.0	0,0,0
2966	2.67e-03	5.44e-03	3.23e-03	130,130,139	0.0	0.0	0.0	0,0,0
2967	2.81e-03	4.55e-03	3.40e-03	130,130,139	0.0	0.0	0.0	0,0,0
2968	2.92e-03	4.50e-03	3.55e-03	130,130,139	0.0	0.0	0.0	0,0,0
2969	3.07e-03	5.22e-03	3.75e-03	130,130,139	0.0	0.0	0.0	0,0,0
2970	3.17e-03	5.07e-03	3.88e-03	130,130,139	0.0	0.0	0.0	0,0,0
2971	3.34e-03	5.11e-03	4.11e-03	130,130,139	0.0	0.0	0.0	0,0,0
2972	4.51e-03	0.01	5.64e-03	130,130,139	0.0	0.0	0.0	0,0,0
2973	3.72e-03	0.01	4.78e-03	130,123,139	0.0	0.0	0.0	0,0,0
2974	3.73e-03	5.03e-03	4.87e-03	126,121,138	0.0	0.0	0.0	0,0,0
2975	3.83e-03	4.94e-03	4.94e-03	126,123,138	0.0	0.0	0.0	0,0,0
2976	3.93e-03	2.28e-03	5.12e-03	126,126,138	0.0	0.0	0.0	0,0,0
2977	3.79e-03	2.30e-03	4.89e-03	126,126,138	0.0	0.0	0.0	0,0,0
2978	4.06e-03	2.38e-03	5.31e-03	126,126,138	0.0	0.0	0.0	0,0,0
2979	3.86e-03	2.40e-03	5.00e-03	130,130,139	0.0	0.0	0.0	0,0,0
2980	4.24e-03	2.50e-03	5.53e-03	130,130,139	0.0	0.0	0.0	0,0,0
2981	4.14e-03	2.53e-03	5.16e-03	130,130,139	0.0	0.0	0.0	0,0,0
2982	4.35e-03	2.58e-03	5.65e-03	130,130,139	0.0	0.0	0.0	0,0,0
2983	4.18e-03	2.54e-03	5.38e-03	130,130,139	0.0	0.0	0.0	0,0,0
2984	4.40e-03	2.62e-03	5.70e-03	126,126,138	0.0	0.0	0.0	0,0,0
2985	4.32e-03	2.62e-03	5.56e-03	130,130,139	0.0	0.0	0.0	0,0,0
2986	4.40e-03	2.63e-03	5.68e-03	130,130,139	0.0	0.0	0.0	0,0,0
2987	4.47e-03	2.70e-03	5.73e-03	130,130,139	0.0	0.0	0.0	0,0,0
2988	4.41e-03	2.65e-03	5.68e-03	130,130,139	0.0	0.0	0.0	0,0,0
2989	4.59e-03	2.76e-03	5.89e-03	130,130,139	0.0	0.0	0.0	0,0,0
2990	4.44e-03	2.68e-03	5.69e-03	130,130,139	0.0	0.0	0.0	0,0,0
2991	4.66e-03	2.80e-03	5.98e-03	130,130,139	0.0	0.0	0.0	0,0,0
2992	4.52e-03	2.71e-03	5.80e-03	130,130,139	0.0	0.0	0.0	0,0,0
2993	4.66e-03	2.80e-03	5.99e-03	130,130,139	0.0	0.0	0.0	0,0,0
2994	4.62e-03	2.78e-03	5.93e-03	130,130,139	0.0	0.0	0.0	0,0,0
2995	4.67e-03	2.80e-03	6.00e-03	130,130,139	0.0	0.0	0.0	0,0,0
2996	4.71e-03	2.83e-03	6.05e-03	130,130,139	0.0	0.0	0.0	0,0,0
2997	4.66e-03	2.79e-03	5.99e-03	130,130,139	0.0	0.0	0.0	0,0,0
2998	4.77e-03	2.87e-03	6.13e-03	130,130,139	0.0	0.0	0.0	0,0,0
2999	4.61e-03	2.78e-03	5.92e-03	130,130,139	0.0	0.0	0.0	0,0,0
3000	4.73e-03	2.85e-03	6.08e-03	130,130,139	0.0	0.0	0.0	0,0,0
3001	4.58e-03	2.75e-03	5.91e-03	130,130,139	0.0	0.0	0.0	0,0,0
3002	4.60e-03	2.78e-03	5.91e-03	130,130,139	0.0	0.0	0.0	0,0,0

3003	4.54e-03	2.71e-03	5.87e-03	130,130,139	0.0	0.0	0.0	0,0,0
3004	4.41e-03	2.68e-03	5.67e-03	130,130,139	0.0	0.0	0.0	0,0,0
3005	4.48e-03	2.66e-03	5.81e-03	126,126,138	0.0	0.0	0.0	0,0,0
3006	4.21e-03	2.55e-03	5.42e-03	130,130,139	0.0	0.0	0.0	0,0,0
3007	4.38e-03	2.59e-03	5.70e-03	130,130,139	0.0	0.0	0.0	0,0,0
3008	3.95e-03	2.46e-03	5.11e-03	130,130,139	0.0	0.0	0.0	0,0,0
3009	4.24e-03	2.48e-03	5.53e-03	130,130,139	0.0	0.0	0.0	0,0,0
3010	3.79e-03	2.36e-03	4.90e-03	130,130,139	0.0	0.0	0.0	0,0,0
3011	4.05e-03	2.36e-03	5.29e-03	126,126,138	0.0	0.0	0.0	0,0,0
3012	3.77e-03	2.27e-03	4.87e-03	126,126,138	0.0	0.0	0.0	0,0,0
3013	3.92e-03	2.25e-03	5.10e-03	126,126,138	0.0	0.0	0.0	0,0,0
3014	3.81e-03	4.70e-03	4.91e-03	126,123,138	0.0	0.0	0.0	0,0,0
3015	3.72e-03	4.94e-03	4.87e-03	126,121,138	0.0	0.0	0.0	0,0,0
3016	3.71e-03	0.01	4.76e-03	130,123,139	0.0	0.0	0.0	0,0,0
3201	0.08	0.08	0.09	130,130,139	0.0	0.0	0.0	0,0,0
3202	0.07	0.12	0.08	130,130,139	0.0	0.0	0.0	0,0,0
3203	0.06	0.11	0.07	130,130,139	0.0	0.0	0.0	0,0,0
3204	0.07	0.12	0.09	130,130,139	0.0	0.0	0.0	0,0,0
3205	0.08	0.08	0.10	130,130,139	0.0	0.0	0.0	0,0,0
3206	0.05	0.09	0.06	126,130,138	0.0	0.0	0.0	0,0,0
3207	0.07	0.23	0.08	130,130,139	0.0	0.0	0.0	0,0,0
3208	0.08	0.30	0.09	130,130,139	0.0	0.0	0.0	0,0,0
3209	0.06	0.28	0.07	130,130,139	0.0	0.0	0.0	0,0,0
3210	0.04	0.18	0.04	130,130,139	0.0	0.0	0.0	0,0,0
3211	0.02	0.09	0.03	130,130,139	0.0	0.0	0.0	0,0,0
3212	0.05	0.19	0.06	130,130,139	0.0	0.0	0.0	0,0,0
3213	0.08	0.30	0.09	130,130,139	0.0	0.0	0.0	0,0,0
3214	0.08	0.34	0.09	130,130,139	0.0	0.0	0.0	0,0,0
3215	0.07	0.29	0.08	130,130,139	0.0	0.0	0.0	0,0,0
3216	0.05	0.17	0.05	130,130,139	0.0	0.0	0.0	0,0,0
3217	0.02	0.08	0.02	130,130,139	0.0	0.0	0.0	0,0,0
3218	0.05	0.19	0.05	130,130,139	0.0	0.0	0.0	0,0,0
3219	0.07	0.30	0.08	130,130,139	0.0	0.0	0.0	0,0,0
3220	0.08	0.35	0.09	130,130,139	0.0	0.0	0.0	0,0,0
3221	0.08	0.30	0.09	130,130,139	0.0	0.0	0.0	0,0,0
3222	0.06	0.19	0.07	130,130,139	0.0	0.0	0.0	0,0,0
3223	0.02	0.10	0.03	130,130,139	0.0	0.0	0.0	0,0,0
3224	0.04	0.19	0.04	130,130,139	0.0	0.0	0.0	0,0,0
3225	0.06	0.28	0.08	130,130,139	0.0	0.0	0.0	0,0,0
3226	0.08	0.31	0.09	130,130,139	0.0	0.0	0.0	0,0,0
3227	0.07	0.24	0.09	130,130,139	0.0	0.0	0.0	0,0,0
3228	0.05	0.09	0.06	126,130,138	0.0	0.0	0.0	0,0,0
3229	0.02	0.05	0.02	130,130,139	0.0	0.0	0.0	0,0,0
3230	0.01	0.06	0.02	123,130,139	0.0	0.0	0.0	0,0,0
3231	9.59e-03	0.06	0.01	123,130,139	0.0	0.0	0.0	0,0,0
3232	9.26e-03	0.06	0.01	130,130,139	0.0	0.0	0.0	0,0,0
3233	7.60e-03	0.05	0.01	130,130,139	0.0	0.0	0.0	0,0,0
3234	6.50e-03	0.04	8.59e-03	130,130,139	0.0	0.0	0.0	0,0,0
3235	4.53e-03	0.05	5.78e-03	126,130,138	0.0	0.0	0.0	0,0,0
3236	4.39e-03	0.06	5.34e-03	130,130,139	0.0	0.0	0.0	0,0,0
3237	4.42e-03	0.07	5.37e-03	130,130,139	0.0	0.0	0.0	0,0,0
3238	4.29e-03	0.06	5.18e-03	130,130,139	0.0	0.0	0.0	0,0,0
3239	3.94e-03	0.04	4.73e-03	130,130,139	0.0	0.0	0.0	0,0,0
3240	4.18e-03	0.03	5.00e-03	126,130,138	0.0	0.0	0.0	0,0,0
3241	4.28e-03	0.05	5.18e-03	130,130,139	0.0	0.0	0.0	0,0,0
3242	4.64e-03	0.06	5.65e-03	130,130,139	0.0	0.0	0.0	0,0,0
3243	4.80e-03	0.07	5.86e-03	130,130,139	0.0	0.0	0.0	0,0,0
3244	4.91e-03	0.06	6.45e-03	126,130,139	0.0	0.0	0.0	0,0,0
3245	6.41e-03	0.05	8.54e-03	123,130,139	0.0	0.0	0.0	0,0,0
3246	8.86e-03	0.04	0.01	130,130,139	0.0	0.0	0.0	0,0,0
3247	9.97e-03	0.05	0.01	123,130,139	0.0	0.0	0.0	0,0,0
3248	0.01	0.06	0.02	130,130,139	0.0	0.0	0.0	0,0,0
3249	0.01	0.07	0.02	123,130,139	0.0	0.0	0.0	0,0,0
3250	0.01	0.06	0.02	123,130,139	0.0	0.0	0.0	0,0,0
3251	0.02	0.05	0.03	130,130,139	0.0	0.0	0.0	0,0,0
3298	0.01	0.03	0.01	126,130,138	0.0	0.0	0.0	0,0,0
3299	8.93e-03	0.03	0.01	121,130,138	0.0	0.0	0.0	0,0,0
3300	6.88e-03	0.03	9.16e-03	130,130,139	0.0	0.0	0.0	0,0,0
3301	6.28e-03	0.03	8.35e-03	130,130,139	0.0	0.0	0.0	0,0,0
3302	5.58e-03	0.02	7.09e-03	130,130,139	0.0	0.0	0.0	0,0,0
3303	5.27e-03	0.02	6.39e-03	130,130,139	0.0	0.0	0.0	0,0,0
3304	4.96e-03	0.02	5.98e-03	130,130,139	0.0	0.0	0.0	0,0,0
3305	4.82e-03	0.03	5.78e-03	130,130,139	0.0	0.0	0.0	0,0,0
3306	4.60e-03	0.03	5.51e-03	130,130,139	0.0	0.0	0.0	0,0,0
3307	4.27e-03	0.03	5.10e-03	130,130,139	0.0	0.0	0.0	0,0,0
3308	3.91e-03	0.02	4.61e-03	130,130,139	0.0	0.0	0.0	0,0,0
3309	3.99e-03	0.02	4.71e-03	130,130,139	0.0	0.0	0.0	0,0,0
3310	4.27e-03	0.02	5.10e-03	130,130,139	0.0	0.0	0.0	0,0,0

3311	4.59e-03	0.03	5.52e-03	130,130,139	0.0	0.0	0.0	0,0,0
3312	4.94e-03	0.04	5.96e-03	130,130,139	0.0	0.0	0.0	0,0,0
3313	5.16e-03	0.03	6.24e-03	130,130,139	0.0	0.0	0.0	0,0,0
3314	5.31e-03	0.02	6.44e-03	130,130,139	0.0	0.0	0.0	0,0,0
3315	5.79e-03	0.02	7.38e-03	126,130,139	0.0	0.0	0.0	0,0,0
3316	6.62e-03	0.02	8.72e-03	130,130,139	0.0	0.0	0.0	0,0,0
3317	7.76e-03	0.03	0.01	130,130,139	0.0	0.0	0.0	0,0,0
3318	8.37e-03	0.03	0.01	123,130,139	0.0	0.0	0.0	0,0,0
3319	0.01	0.03	0.01	121,130,138	0.0	0.0	0.0	0,0,0
3320	0.01	0.03	0.02	126,130,138	0.0	0.0	0.0	0,0,0
3367	7.32e-03	0.02	9.75e-03	130,130,139	0.0	0.0	0.0	0,0,0
3368	6.47e-03	0.01	8.35e-03	126,130,138	0.0	0.0	0.0	0,0,0
3369	5.54e-03	0.01	6.91e-03	130,130,139	0.0	0.0	0.0	0,0,0
3370	5.20e-03	0.01	6.46e-03	130,130,139	0.0	0.0	0.0	0,0,0
3371	4.93e-03	0.01	6.09e-03	130,130,139	0.0	0.0	0.0	0,0,0
3372	4.64e-03	0.01	5.69e-03	130,130,139	0.0	0.0	0.0	0,0,0
3373	4.25e-03	0.01	5.17e-03	130,130,139	0.0	0.0	0.0	0,0,0
3374	3.99e-03	0.01	4.82e-03	130,130,139	0.0	0.0	0.0	0,0,0
3375	3.72e-03	0.01	4.47e-03	130,130,139	0.0	0.0	0.0	0,0,0
3376	3.37e-03	0.01	4.03e-03	130,130,139	0.0	0.0	0.0	0,0,0
3377	3.05e-03	0.01	3.61e-03	130,130,139	0.0	0.0	0.0	0,0,0
3378	3.14e-03	9.75e-03	3.73e-03	130,130,139	0.0	0.0	0.0	0,0,0
3379	3.43e-03	0.01	4.12e-03	130,130,139	0.0	0.0	0.0	0,0,0
3380	3.77e-03	0.01	4.57e-03	130,130,139	0.0	0.0	0.0	0,0,0
3381	4.14e-03	0.02	5.03e-03	130,130,139	0.0	0.0	0.0	0,0,0
3382	4.42e-03	0.01	5.40e-03	130,130,139	0.0	0.0	0.0	0,0,0
3383	4.70e-03	0.01	5.77e-03	130,130,139	0.0	0.0	0.0	0,0,0
3384	5.09e-03	0.01	6.28e-03	130,130,139	0.0	0.0	0.0	0,0,0
3385	5.36e-03	0.01	6.66e-03	130,130,139	0.0	0.0	0.0	0,0,0
3386	5.63e-03	0.01	7.05e-03	130,130,139	0.0	0.0	0.0	0,0,0
3387	5.98e-03	0.01	7.56e-03	130,130,139	0.0	0.0	0.0	0,0,0
3388	7.06e-03	0.01	9.24e-03	126,130,138	0.0	0.0	0.0	0,0,0
3389	7.79e-03	0.02	0.01	130,130,139	0.0	0.0	0.0	0,0,0
3436	5.12e-03	0.01	6.02e-03	130,130,139	0.0	0.0	0.0	0,0,0
3437	4.74e-03	8.60e-03	5.98e-03	126,130,139	0.0	0.0	0.0	0,0,0
3438	4.26e-03	8.46e-03	5.33e-03	126,130,138	0.0	0.0	0.0	0,0,0
3439	4.03e-03	8.08e-03	5.02e-03	126,130,138	0.0	0.0	0.0	0,0,0
3440	3.86e-03	7.49e-03	4.80e-03	130,130,139	0.0	0.0	0.0	0,0,0
3441	3.66e-03	7.68e-03	4.51e-03	130,130,138	0.0	0.0	0.0	0,0,0
3442	3.35e-03	7.72e-03	4.10e-03	126,130,138	0.0	0.0	0.0	0,0,0
3443	3.07e-03	7.94e-03	3.74e-03	126,130,138	0.0	0.0	0.0	0,0,0
3444	2.84e-03	8.16e-03	3.44e-03	126,130,138	0.0	0.0	0.0	0,0,0
3445	2.62e-03	8.26e-03	3.16e-03	126,130,138	0.0	0.0	0.0	0,0,0
3446	2.45e-03	8.08e-03	2.93e-03	130,130,139	0.0	0.0	0.0	0,0,0
3447	2.50e-03	8.34e-03	2.99e-03	126,130,138	0.0	0.0	0.0	0,0,0
3448	2.69e-03	8.86e-03	3.25e-03	130,130,139	0.0	0.0	0.0	0,0,0
3449	2.85e-03	8.86e-03	3.47e-03	126,130,138	0.0	0.0	0.0	0,0,0
3450	3.06e-03	8.79e-03	3.73e-03	126,130,138	0.0	0.0	0.0	0,0,0
3451	3.28e-03	8.41e-03	4.01e-03	126,130,138	0.0	0.0	0.0	0,0,0
3452	3.53e-03	7.96e-03	4.35e-03	126,130,138	0.0	0.0	0.0	0,0,0
3453	3.82e-03	7.80e-03	4.73e-03	130,130,138	0.0	0.0	0.0	0,0,0
3454	4.02e-03	7.41e-03	5.00e-03	130,130,139	0.0	0.0	0.0	0,0,0
3455	4.19e-03	7.81e-03	5.23e-03	130,130,138	0.0	0.0	0.0	0,0,0
3456	4.43e-03	8.25e-03	5.55e-03	126,130,138	0.0	0.0	0.0	0,0,0
3457	4.92e-03	8.44e-03	6.24e-03	130,130,139	0.0	0.0	0.0	0,0,0
3458	5.09e-03	9.53e-03	5.98e-03	130,123,139	0.0	0.0	0.0	0,0,0
3459	6.48e-03	9.51e-03	7.70e-03	130,130,139	0.0	0.0	0.0	0,0,0
3460	3.68e-03	2.63e-03	4.74e-03	130,123,139	0.0	0.0	0.0	0,0,0
3461	4.10e-03	2.37e-03	4.97e-03	130,130,139	0.0	0.0	0.0	0,0,0
3462	3.90e-03	2.17e-03	5.06e-03	130,130,139	0.0	0.0	0.0	0,0,0
3463	4.55e-03	2.66e-03	5.58e-03	130,130,139	0.0	0.0	0.0	0,0,0
3464	4.19e-03	2.40e-03	5.31e-03	130,130,139	0.0	0.0	0.0	0,0,0
3465	4.82e-03	2.85e-03	5.98e-03	130,130,139	0.0	0.0	0.0	0,0,0
3466	4.37e-03	2.60e-03	5.54e-03	130,130,139	0.0	0.0	0.0	0,0,0
3467	4.96e-03	2.97e-03	6.18e-03	130,130,139	0.0	0.0	0.0	0,0,0
3468	4.57e-03	2.73e-03	5.81e-03	130,130,139	0.0	0.0	0.0	0,0,0
3469	5.13e-03	3.08e-03	6.42e-03	130,130,139	0.0	0.0	0.0	0,0,0
3470	4.77e-03	2.87e-03	6.08e-03	130,130,139	0.0	0.0	0.0	0,0,0
3471	5.33e-03	3.19e-03	6.68e-03	130,130,139	0.0	0.0	0.0	0,0,0
3472	5.10e-03	3.00e-03	6.42e-03	130,130,139	0.0	0.0	0.0	0,0,0
3473	5.55e-03	3.30e-03	6.95e-03	130,130,139	0.0	0.0	0.0	0,0,0
3474	5.36e-03	3.16e-03	6.73e-03	130,130,139	0.0	0.0	0.0	0,0,0
3475	5.66e-03	3.37e-03	7.11e-03	130,130,139	0.0	0.0	0.0	0,0,0
3476	5.47e-03	3.24e-03	6.88e-03	130,130,139	0.0	0.0	0.0	0,0,0
3477	5.65e-03	3.37e-03	7.11e-03	130,130,139	0.0	0.0	0.0	0,0,0
3478	5.48e-03	3.27e-03	6.91e-03	130,130,139	0.0	0.0	0.0	0,0,0
3479	5.56e-03	3.34e-03	7.03e-03	130,130,139	0.0	0.0	0.0	0,0,0
3480	5.52e-03	3.31e-03	6.97e-03	130,130,139	0.0	0.0	0.0	0,0,0

3481	5.59e-03	3.34e-03	7.06e-03	130,130,139	0.0	0.0	0.0	0,0,0
3482	5.62e-03	3.38e-03	7.10e-03	130,130,139	0.0	0.0	0.0	0,0,0
3483	5.65e-03	3.37e-03	7.15e-03	130,130,139	0.0	0.0	0.0	0,0,0
3484	5.80e-03	3.47e-03	7.31e-03	130,130,139	0.0	0.0	0.0	0,0,0
3485	5.69e-03	3.37e-03	7.18e-03	130,130,139	0.0	0.0	0.0	0,0,0
3486	5.84e-03	3.49e-03	7.35e-03	130,130,139	0.0	0.0	0.0	0,0,0
3487	5.58e-03	3.29e-03	7.03e-03	130,130,139	0.0	0.0	0.0	0,0,0
3488	5.70e-03	3.40e-03	7.17e-03	130,130,139	0.0	0.0	0.0	0,0,0
3489	5.29e-03	3.11e-03	6.67e-03	130,130,139	0.0	0.0	0.0	0,0,0
3490	5.42e-03	3.24e-03	6.82e-03	130,130,139	0.0	0.0	0.0	0,0,0
3491	4.84e-03	2.91e-03	6.18e-03	130,130,139	0.0	0.0	0.0	0,0,0
3492	5.13e-03	3.08e-03	6.43e-03	130,130,139	0.0	0.0	0.0	0,0,0
3493	4.52e-03	2.71e-03	5.75e-03	130,130,139	0.0	0.0	0.0	0,0,0
3494	4.88e-03	2.92e-03	6.08e-03	130,130,139	0.0	0.0	0.0	0,0,0
3495	4.25e-03	2.54e-03	5.49e-03	130,130,139	0.0	0.0	0.0	0,0,0
3496	4.70e-03	2.78e-03	5.81e-03	130,130,139	0.0	0.0	0.0	0,0,0
3497	4.07e-03	2.32e-03	5.29e-03	130,130,139	0.0	0.0	0.0	0,0,0
3498	4.42e-03	2.58e-03	5.40e-03	130,130,139	0.0	0.0	0.0	0,0,0
3499	3.89e-03	2.12e-03	5.05e-03	130,130,139	0.0	0.0	0.0	0,0,0
3500	3.97e-03	2.30e-03	4.80e-03	130,130,139	0.0	0.0	0.0	0,0,0
3501	3.67e-03	2.50e-03	4.74e-03	130,123,139	0.0	0.0	0.0	0,0,0
3502	6.38e-03	9.20e-03	7.56e-03	130,130,139	0.0	0.0	0.0	0,0,0

Setto	**rRfck**	**rRfyk**	**rPfck**		**wR**	**wF**	**wP**	
	0.10	0.35	0.13		0.0	0.0	0.0	

Guscio	**rRfck**	**rRfyk**	**rPfck**	**Rif. cmb**	**wR**	**wF**	**wP**	**Rif. cmb**
					mm	mm	mm	
1	0.05	0.11	0.06	130,130,139	0.0	0.0	0.0	0,0,0
2	0.03	0.06	0.03	130,126,138	0.0	0.0	0.0	0,0,0
3	0.03	0.08	0.04	126,126,138	0.0	0.0	0.0	0,0,0
4	0.03	0.08	0.04	126,126,138	0.0	0.0	0.0	0,0,0
5	0.03	0.08	0.04	130,126,138	0.0	0.0	0.0	0,0,0
6	0.03	0.08	0.04	130,130,139	0.0	0.0	0.0	0,0,0
7	0.03	0.07	0.04	126,130,138	0.0	0.0	0.0	0,0,0
8	0.03	0.06	0.03	126,126,138	0.0	0.0	0.0	0,0,0
9	0.02	0.05	0.03	126,126,138	0.0	0.0	0.0	0,0,0
10	0.04	0.08	0.05	126,126,138	0.0	0.0	0.0	0,0,0
11	0.11	0.25	0.14	130,130,139	0.0	0.0	0.0	0,0,0
12	0.09	0.20	0.11	130,130,139	0.0	0.0	0.0	0,0,0
13	0.03	0.08	0.04	126,130,138	0.0	0.0	0.0	0,0,0
14	0.02	0.06	0.03	126,126,138	0.0	0.0	0.0	0,0,0
15	0.03	0.06	0.03	126,126,138	0.0	0.0	0.0	0,0,0
16	0.03	0.07	0.04	126,126,138	0.0	0.0	0.0	0,0,0
17	0.03	0.07	0.04	126,126,138	0.0	0.0	0.0	0,0,0
18	0.03	0.07	0.04	126,126,138	0.0	0.0	0.0	0,0,0
19	0.03	0.06	0.04	126,126,138	0.0	0.0	0.0	0,0,0
20	0.03	0.06	0.03	126,126,138	0.0	0.0	0.0	0,0,0
21	0.02	0.05	0.03	126,126,138	0.0	0.0	0.0	0,0,0
22	0.04	0.09	0.05	126,126,138	0.0	0.0	0.0	0,0,0
23	0.10	0.25	0.13	130,130,139	0.0	0.0	0.0	0,0,0
24	0.09	0.22	0.12	130,130,139	0.0	0.0	0.0	0,0,0
25	0.04	0.08	0.05	126,126,138	0.0	0.0	0.0	0,0,0
26	0.02	0.05	0.03	126,126,138	0.0	0.0	0.0	0,0,0
27	0.03	0.06	0.03	126,126,138	0.0	0.0	0.0	0,0,0
28	0.03	0.07	0.04	126,126,138	0.0	0.0	0.0	0,0,0
29	0.03	0.07	0.04	126,126,138	0.0	0.0	0.0	0,0,0
30	0.03	0.07	0.04	126,126,138	0.0	0.0	0.0	0,0,0
31	0.03	0.07	0.04	126,126,138	0.0	0.0	0.0	0,0,0
32	0.03	0.06	0.03	126,126,138	0.0	0.0	0.0	0,0,0
33	0.02	0.05	0.03	126,126,138	0.0	0.0	0.0	0,0,0
34	0.03	0.08	0.04	126,130,138	0.0	0.0	0.0	0,0,0
35	0.09	0.21	0.11	130,130,139	0.0	0.0	0.0	0,0,0
36	0.10	0.24	0.13	130,130,139	0.0	0.0	0.0	0,0,0
37	0.04	0.08	0.04	126,126,138	0.0	0.0	0.0	0,0,0
38	0.02	0.05	0.03	126,126,138	0.0	0.0	0.0	0,0,0
39	0.03	0.06	0.03	126,126,138	0.0	0.0	0.0	0,0,0
40	0.03	0.07	0.04	126,130,138	0.0	0.0	0.0	0,0,0
41	0.03	0.08	0.04	130,130,139	0.0	0.0	0.0	0,0,0
42	0.03	0.08	0.04	130,126,138	0.0	0.0	0.0	0,0,0
43	0.03	0.08	0.04	126,126,138	0.0	0.0	0.0	0,0,0
44	0.03	0.08	0.04	126,126,138	0.0	0.0	0.0	0,0,0
45	0.03	0.06	0.03	126,126,138	0.0	0.0	0.0	0,0,0
46	0.05	0.11	0.06	130,130,139	0.0	0.0	0.0	0,0,0
47	0.05	0.13	0.07	126,126,138	0.0	0.0	0.0	0,0,0
48	0.04	0.10	0.05	130,130,139	0.0	0.0	0.0	0,0,0
49	0.03	0.08	0.04	126,126,138	0.0	0.0	0.0	0,0,0

50	0.03	0.08	0.04	126,126,138	0.0	0.0	0.0	0,0,0
51	0.03	0.08	0.04	126,126,138	0.0	0.0	0.0	0,0,0
52	0.03	0.08	0.04	126,126,138	0.0	0.0	0.0	0,0,0
53	0.03	0.07	0.04	126,126,138	0.0	0.0	0.0	0,0,0
54	0.03	0.06	0.03	126,126,138	0.0	0.0	0.0	0,0,0
55	0.02	0.05	0.03	126,126,138	0.0	0.0	0.0	0,0,0
56	0.03	0.08	0.04	130,130,139	0.0	0.0	0.0	0,0,0
57	0.11	0.25	0.14	130,130,139	0.0	0.0	0.0	0,0,0
58	0.09	0.21	0.11	130,130,139	0.0	0.0	0.0	0,0,0
59	0.03	0.08	0.04	130,130,139	0.0	0.0	0.0	0,0,0
60	0.03	0.06	0.03	126,126,138	0.0	0.0	0.0	0,0,0
61	0.03	0.06	0.03	126,126,138	0.0	0.0	0.0	0,0,0
62	0.03	0.06	0.03	126,126,138	0.0	0.0	0.0	0,0,0
63	0.03	0.06	0.03	126,126,138	0.0	0.0	0.0	0,0,0
64	0.03	0.07	0.03	126,126,138	0.0	0.0	0.0	0,0,0
65	0.03	0.06	0.03	126,126,138	0.0	0.0	0.0	0,0,0
66	0.03	0.06	0.03	126,126,138	0.0	0.0	0.0	0,0,0
67	0.02	0.06	0.03	126,126,138	0.0	0.0	0.0	0,0,0
68	0.04	0.08	0.04	130,130,139	0.0	0.0	0.0	0,0,0
69	0.10	0.24	0.13	130,130,139	0.0	0.0	0.0	0,0,0
70	0.10	0.23	0.12	130,130,139	0.0	0.0	0.0	0,0,0
71	0.03	0.08	0.04	130,130,139	0.0	0.0	0.0	0,0,0
72	0.02	0.06	0.03	126,126,138	0.0	0.0	0.0	0,0,0
73	0.03	0.06	0.03	126,126,138	0.0	0.0	0.0	0,0,0
74	0.03	0.06	0.03	126,126,138	0.0	0.0	0.0	0,0,0
75	0.03	0.07	0.03	126,126,138	0.0	0.0	0.0	0,0,0
76	0.03	0.07	0.03	126,126,138	0.0	0.0	0.0	0,0,0
77	0.03	0.06	0.03	126,126,138	0.0	0.0	0.0	0,0,0
78	0.03	0.06	0.03	126,126,138	0.0	0.0	0.0	0,0,0
79	0.03	0.06	0.03	126,126,138	0.0	0.0	0.0	0,0,0
80	0.03	0.08	0.04	130,130,139	0.0	0.0	0.0	0,0,0
81	0.09	0.21	0.11	130,130,139	0.0	0.0	0.0	0,0,0
82	0.10	0.24	0.13	130,130,139	0.0	0.0	0.0	0,0,0
83	0.03	0.07	0.04	130,130,139	0.0	0.0	0.0	0,0,0
84	0.02	0.05	0.03	126,126,138	0.0	0.0	0.0	0,0,0
85	0.03	0.06	0.03	126,126,138	0.0	0.0	0.0	0,0,0
86	0.03	0.07	0.04	126,126,138	0.0	0.0	0.0	0,0,0
87	0.03	0.08	0.04	126,126,138	0.0	0.0	0.0	0,0,0
88	0.03	0.08	0.04	126,126,138	0.0	0.0	0.0	0,0,0
89	0.03	0.08	0.04	126,126,138	0.0	0.0	0.0	0,0,0
90	0.03	0.08	0.04	126,126,138	0.0	0.0	0.0	0,0,0
91	0.04	0.10	0.05	130,130,139	0.0	0.0	0.0	0,0,0
92	0.06	0.13	0.07	126,126,138	0.0	0.0	0.0	0,0,0
93	0.04	0.08	0.05	126,126,138	0.0	0.0	0.0	0,0,0
94	0.03	0.08	0.04	126,126,138	0.0	0.0	0.0	0,0,0
95	0.03	0.08	0.04	126,126,138	0.0	0.0	0.0	0,0,0
96	0.03	0.08	0.04	126,126,138	0.0	0.0	0.0	0,0,0
97	0.03	0.08	0.04	126,126,138	0.0	0.0	0.0	0,0,0
98	0.03	0.07	0.04	126,126,138	0.0	0.0	0.0	0,0,0
99	0.02	0.06	0.03	126,126,138	0.0	0.0	0.0	0,0,0
100	0.02	0.06	0.03	126,126,138	0.0	0.0	0.0	0,0,0
101	0.02	0.06	0.03	126,126,138	0.0	0.0	0.0	0,0,0
102	0.03	0.06	0.03	130,130,139	0.0	0.0	0.0	0,0,0
103	0.04	0.09	0.05	130,130,139	0.0	0.0	0.0	0,0,0
104	0.04	0.09	0.05	130,130,139	0.0	0.0	0.0	0,0,0
105	0.03	0.06	0.03	130,130,139	0.0	0.0	0.0	0,0,0
106	0.03	0.06	0.03	126,126,138	0.0	0.0	0.0	0,0,0
107	0.03	0.06	0.03	126,126,138	0.0	0.0	0.0	0,0,0
108	0.03	0.06	0.03	126,126,138	0.0	0.0	0.0	0,0,0
109	0.03	0.06	0.03	126,126,138	0.0	0.0	0.0	0,0,0
110	0.02	0.06	0.03	126,126,138	0.0	0.0	0.0	0,0,0
111	0.03	0.06	0.03	126,126,138	0.0	0.0	0.0	0,0,0
112	0.03	0.06	0.03	126,126,138	0.0	0.0	0.0	0,0,0
113	0.02	0.06	0.03	126,126,138	0.0	0.0	0.0	0,0,0
114	0.03	0.07	0.03	130,130,139	0.0	0.0	0.0	0,0,0
115	0.04	0.10	0.05	130,130,139	0.0	0.0	0.0	0,0,0
116	0.04	0.10	0.05	130,130,139	0.0	0.0	0.0	0,0,0
117	0.03	0.07	0.03	130,130,139	0.0	0.0	0.0	0,0,0
118	0.02	0.06	0.03	126,126,138	0.0	0.0	0.0	0,0,0
119	0.03	0.06	0.03	126,126,138	0.0	0.0	0.0	0,0,0
120	0.03	0.06	0.03	126,126,138	0.0	0.0	0.0	0,0,0
121	0.02	0.06	0.03	126,126,138	0.0	0.0	0.0	0,0,0
122	0.02	0.06	0.03	126,126,138	0.0	0.0	0.0	0,0,0
123	0.03	0.06	0.03	126,126,138	0.0	0.0	0.0	0,0,0
124	0.03	0.06	0.03	126,126,138	0.0	0.0	0.0	0,0,0
125	0.03	0.06	0.03	126,126,138	0.0	0.0	0.0	0,0,0
126	0.03	0.06	0.03	130,130,139	0.0	0.0	0.0	0,0,0
127	0.04	0.09	0.05	130,130,139	0.0	0.0	0.0	0,0,0

128	0.04	0.09	0.05	130,130,139	0.0	0.0	0.0	0,0,0
129	0.02	0.06	0.03	130,130,139	0.0	0.0	0.0	0,0,0
130	0.02	0.06	0.03	126,126,138	0.0	0.0	0.0	0,0,0
131	0.02	0.06	0.03	126,126,138	0.0	0.0	0.0	0,0,0
132	0.02	0.06	0.03	126,126,138	0.0	0.0	0.0	0,0,0
133	0.03	0.07	0.04	126,126,138	0.0	0.0	0.0	0,0,0
134	0.03	0.08	0.04	126,126,138	0.0	0.0	0.0	0,0,0
135	0.03	0.08	0.04	126,126,138	0.0	0.0	0.0	0,0,0
136	0.03	0.08	0.04	126,126,138	0.0	0.0	0.0	0,0,0
137	0.03	0.08	0.04	126,126,138	0.0	0.0	0.0	0,0,0
138	0.04	0.08	0.05	126,126,138	0.0	0.0	0.0	0,0,0
139	0.04	0.08	0.05	126,126,138	0.0	0.0	0.0	0,0,0
140	0.03	0.08	0.04	126,126,138	0.0	0.0	0.0	0,0,0
141	0.03	0.08	0.04	126,126,138	0.0	0.0	0.0	0,0,0
142	0.03	0.08	0.04	126,126,138	0.0	0.0	0.0	0,0,0
143	0.03	0.07	0.04	126,126,138	0.0	0.0	0.0	0,0,0
144	0.02	0.06	0.03	126,126,138	0.0	0.0	0.0	0,0,0
145	0.02	0.05	0.03	126,126,138	0.0	0.0	0.0	0,0,0
146	0.02	0.05	0.03	126,126,138	0.0	0.0	0.0	0,0,0
147	0.02	0.06	0.03	126,126,138	0.0	0.0	0.0	0,0,0
148	0.02	0.06	0.03	126,126,138	0.0	0.0	0.0	0,0,0
149	0.02	0.05	0.03	126,126,138	0.0	0.0	0.0	0,0,0
150	0.02	0.06	0.03	126,126,138	0.0	0.0	0.0	0,0,0
151	0.02	0.06	0.03	126,126,138	0.0	0.0	0.0	0,0,0
152	0.02	0.06	0.03	126,126,138	0.0	0.0	0.0	0,0,0
153	0.02	0.06	0.03	126,126,138	0.0	0.0	0.0	0,0,0
154	0.02	0.06	0.03	126,126,138	0.0	0.0	0.0	0,0,0
155	0.02	0.05	0.03	126,126,138	0.0	0.0	0.0	0,0,0
156	0.02	0.05	0.02	126,126,138	0.0	0.0	0.0	0,0,0
157	0.02	0.05	0.03	126,126,138	0.0	0.0	0.0	0,0,0
158	0.02	0.05	0.03	126,126,138	0.0	0.0	0.0	0,0,0
159	0.02	0.06	0.03	126,126,138	0.0	0.0	0.0	0,0,0
160	0.02	0.05	0.03	126,126,138	0.0	0.0	0.0	0,0,0
161	0.02	0.05	0.03	126,130,138	0.0	0.0	0.0	0,0,0
162	0.02	0.05	0.03	126,130,138	0.0	0.0	0.0	0,0,0
163	0.02	0.05	0.03	126,126,138	0.0	0.0	0.0	0,0,0
164	0.02	0.06	0.03	126,126,138	0.0	0.0	0.0	0,0,0
165	0.02	0.06	0.03	126,126,138	0.0	0.0	0.0	0,0,0
166	0.02	0.05	0.03	126,126,138	0.0	0.0	0.0	0,0,0
167	0.02	0.05	0.02	126,126,138	0.0	0.0	0.0	0,0,0
168	0.02	0.05	0.03	126,126,138	0.0	0.0	0.0	0,0,0
169	0.02	0.05	0.03	126,126,138	0.0	0.0	0.0	0,0,0
170	0.02	0.06	0.03	126,126,138	0.0	0.0	0.0	0,0,0
171	0.02	0.06	0.03	126,126,138	0.0	0.0	0.0	0,0,0
172	0.02	0.06	0.03	126,126,138	0.0	0.0	0.0	0,0,0
173	0.02	0.05	0.03	126,126,138	0.0	0.0	0.0	0,0,0
174	0.02	0.05	0.03	126,126,138	0.0	0.0	0.0	0,0,0
175	0.02	0.06	0.03	126,126,138	0.0	0.0	0.0	0,0,0
176	0.02	0.06	0.03	126,126,138	0.0	0.0	0.0	0,0,0
177	0.02	0.05	0.03	126,126,138	0.0	0.0	0.0	0,0,0
178	0.02	0.05	0.03	126,126,138	0.0	0.0	0.0	0,0,0
179	0.02	0.06	0.03	126,126,138	0.0	0.0	0.0	0,0,0
180	0.03	0.07	0.04	126,126,138	0.0	0.0	0.0	0,0,0
181	0.03	0.08	0.04	126,126,138	0.0	0.0	0.0	0,0,0
182	0.03	0.08	0.04	126,126,138	0.0	0.0	0.0	0,0,0
183	0.03	0.08	0.04	126,126,138	0.0	0.0	0.0	0,0,0
184	0.04	0.08	0.05	126,126,138	0.0	0.0	0.0	0,0,0
185	0.03	0.07	0.04	126,126,138	0.0	0.0	0.0	0,0,0
186	0.03	0.06	0.03	126,126,138	0.0	0.0	0.0	0,0,0
187	0.03	0.07	0.04	126,126,138	0.0	0.0	0.0	0,0,0
188	0.03	0.07	0.03	126,126,138	0.0	0.0	0.0	0,0,0
189	0.03	0.08	0.04	126,126,138	0.0	0.0	0.0	0,0,0
190	0.03	0.09	0.04	126,126,138	0.0	0.0	0.0	0,0,0
191	0.03	0.09	0.04	126,126,138	0.0	0.0	0.0	0,0,0
192	0.04	0.08	0.04	126,126,138	0.0	0.0	0.0	0,0,0
193	0.03	0.08	0.04	126,126,138	0.0	0.0	0.0	0,0,0
194	0.03	0.08	0.04	126,126,138	0.0	0.0	0.0	0,0,0
195	0.03	0.09	0.04	126,126,138	0.0	0.0	0.0	0,0,0
196	0.03	0.08	0.04	126,126,138	0.0	0.0	0.0	0,0,0
197	0.04	0.09	0.05	126,126,138	0.0	0.0	0.0	0,0,0
198	0.03	0.09	0.04	126,126,138	0.0	0.0	0.0	0,0,0
199	0.04	0.10	0.05	126,126,138	0.0	0.0	0.0	0,0,0
200	0.04	0.11	0.05	126,126,138	0.0	0.0	0.0	0,0,0
201	0.04	0.11	0.06	126,126,138	0.0	0.0	0.0	0,0,0
202	0.05	0.11	0.06	126,126,138	0.0	0.0	0.0	0,0,0
203	0.04	0.11	0.05	126,126,138	0.0	0.0	0.0	0,0,0
204	0.04	0.10	0.05	126,126,138	0.0	0.0	0.0	0,0,0
205	0.04	0.10	0.04	126,126,138	0.0	0.0	0.0	0,0,0

206	0.04	0.09	0.05	126,126,138	0.0	0.0	0.0	0,0,0
207	0.04	0.09	0.05	126,126,138	0.0	0.0	0.0	0,0,0
208	0.04	0.09	0.05	126,126,138	0.0	0.0	0.0	0,0,0
209	0.04	0.10	0.05	126,126,138	0.0	0.0	0.0	0,0,0
210	0.04	0.10	0.04	126,126,138	0.0	0.0	0.0	0,0,0
211	0.04	0.10	0.06	126,126,138	0.0	0.0	0.0	0,0,0
212	0.04	0.11	0.05	126,126,138	0.0	0.0	0.0	0,0,0
213	0.05	0.11	0.06	126,126,138	0.0	0.0	0.0	0,0,0
214	0.05	0.11	0.06	126,126,138	0.0	0.0	0.0	0,0,0
215	0.04	0.11	0.05	126,126,138	0.0	0.0	0.0	0,0,0
216	0.04	0.10	0.05	126,126,138	0.0	0.0	0.0	0,0,0
217	0.03	0.10	0.04	126,126,138	0.0	0.0	0.0	0,0,0
218	0.04	0.09	0.05	126,126,138	0.0	0.0	0.0	0,0,0
219	0.03	0.08	0.04	126,126,138	0.0	0.0	0.0	0,0,0
220	0.03	0.09	0.04	126,126,138	0.0	0.0	0.0	0,0,0
221	0.03	0.08	0.04	126,126,138	0.0	0.0	0.0	0,0,0
222	0.03	0.08	0.04	126,126,138	0.0	0.0	0.0	0,0,0
223	0.04	0.09	0.04	126,126,138	0.0	0.0	0.0	0,0,0
224	0.03	0.09	0.04	126,126,138	0.0	0.0	0.0	0,0,0
225	0.03	0.09	0.04	126,126,138	0.0	0.0	0.0	0,0,0
226	0.03	0.08	0.04	126,126,138	0.0	0.0	0.0	0,0,0
227	0.03	0.07	0.03	126,126,138	0.0	0.0	0.0	0,0,0
228	0.03	0.07	0.04	126,126,138	0.0	0.0	0.0	0,0,0
229	0.03	0.06	0.03	126,126,138	0.0	0.0	0.0	0,0,0
230	0.03	0.07	0.04	126,126,138	0.0	0.0	0.0	0,0,0
231	0.03	0.08	0.04	126,126,138	0.0	0.0	0.0	0,0,0
232	0.03	0.05	0.04	126,126,138	0.0	0.0	0.0	0,0,0
233	0.04	0.09	0.05	126,126,138	0.0	0.0	0.0	0,0,0
234	0.04	0.08	0.05	126,126,138	0.0	0.0	0.0	0,0,0
235	0.05	0.10	0.06	126,126,138	0.0	0.0	0.0	0,0,0
236	0.05	0.09	0.06	126,126,138	0.0	0.0	0.0	0,0,0
237	0.05	0.09	0.06	126,126,138	0.0	0.0	0.0	0,0,0
238	0.05	0.11	0.06	126,126,138	0.0	0.0	0.0	0,0,0
239	0.04	0.08	0.05	126,126,138	0.0	0.0	0.0	0,0,0
240	0.04	0.10	0.05	126,126,138	0.0	0.0	0.0	0,0,0
241	0.04	0.11	0.05	126,126,138	0.0	0.0	0.0	0,0,0
242	0.04	0.11	0.05	126,126,138	0.0	0.0	0.0	0,0,0
243	0.05	0.11	0.06	126,126,138	0.0	0.0	0.0	0,0,0
244	0.04	0.10	0.06	126,126,138	0.0	0.0	0.0	0,0,0
245	0.06	0.13	0.07	126,126,138	0.0	0.0	0.0	0,0,0
246	0.05	0.11	0.07	126,126,138	0.0	0.0	0.0	0,0,0
247	0.06	0.13	0.07	126,126,138	0.0	0.0	0.0	0,0,0
248	0.06	0.12	0.07	126,126,138	0.0	0.0	0.0	0,0,0
249	0.06	0.11	0.07	126,126,138	0.0	0.0	0.0	0,0,0
250	0.06	0.13	0.07	126,126,138	0.0	0.0	0.0	0,0,0
251	0.05	0.10	0.06	126,126,138	0.0	0.0	0.0	0,0,0
252	0.05	0.12	0.06	126,126,138	0.0	0.0	0.0	0,0,0
253	0.05	0.12	0.06	126,126,138	0.0	0.0	0.0	0,0,0
254	0.05	0.12	0.06	126,126,138	0.0	0.0	0.0	0,0,0
255	0.05	0.12	0.06	126,126,138	0.0	0.0	0.0	0,0,0
256	0.05	0.10	0.06	126,126,138	0.0	0.0	0.0	0,0,0
257	0.06	0.13	0.07	126,126,138	0.0	0.0	0.0	0,0,0
258	0.06	0.11	0.07	126,126,138	0.0	0.0	0.0	0,0,0
259	0.06	0.13	0.07	126,126,138	0.0	0.0	0.0	0,0,0
260	0.06	0.13	0.07	126,126,138	0.0	0.0	0.0	0,0,0
261	0.06	0.11	0.07	126,126,138	0.0	0.0	0.0	0,0,0
262	0.06	0.13	0.07	126,126,138	0.0	0.0	0.0	0,0,0
263	0.05	0.10	0.06	126,126,138	0.0	0.0	0.0	0,0,0
264	0.05	0.11	0.06	126,126,138	0.0	0.0	0.0	0,0,0
265	0.04	0.11	0.05	126,126,138	0.0	0.0	0.0	0,0,0
266	0.04	0.12	0.05	126,126,138	0.0	0.0	0.0	0,0,0
267	0.04	0.10	0.05	126,126,138	0.0	0.0	0.0	0,0,0
268	0.04	0.09	0.05	126,126,138	0.0	0.0	0.0	0,0,0
269	0.05	0.11	0.06	126,126,138	0.0	0.0	0.0	0,0,0
270	0.05	0.09	0.06	126,126,138	0.0	0.0	0.0	0,0,0
271	0.05	0.09	0.06	126,126,138	0.0	0.0	0.0	0,0,0
272	0.05	0.10	0.06	126,126,138	0.0	0.0	0.0	0,0,0
273	0.04	0.08	0.04	126,126,138	0.0	0.0	0.0	0,0,0
274	0.04	0.09	0.05	126,126,138	0.0	0.0	0.0	0,0,0
275	0.03	0.05	0.04	126,126,138	0.0	0.0	0.0	0,0,0
276	0.03	0.08	0.04	126,126,138	0.0	0.0	0.0	0,0,0
277	0.03	0.09	0.04	126,126,138	0.0	0.0	0.0	0,0,0
278	0.03	0.07	0.04	126,126,138	0.0	0.0	0.0	0,0,0
279	0.04	0.12	0.05	126,126,138	0.0	0.0	0.0	0,0,0
280	0.04	0.10	0.05	126,126,138	0.0	0.0	0.0	0,0,0
281	0.05	0.13	0.06	126,126,138	0.0	0.0	0.0	0,0,0
282	0.05	0.13	0.06	126,126,138	0.0	0.0	0.0	0,0,0
283	0.05	0.13	0.06	126,126,138	0.0	0.0	0.0	0,0,0

284	0.05	0.14	0.06	126,126,138	0.0	0.0	0.0	0,0,0
285	0.05	0.12	0.06	126,126,138	0.0	0.0	0.0	0,0,0
286	0.05	0.13	0.06	126,126,138	0.0	0.0	0.0	0,0,0
287	0.04	0.12	0.05	126,126,138	0.0	0.0	0.0	0,0,0
288	0.04	0.12	0.05	126,126,138	0.0	0.0	0.0	0,0,0
289	0.05	0.14	0.06	126,126,138	0.0	0.0	0.0	0,0,0
290	0.05	0.12	0.06	126,126,138	0.0	0.0	0.0	0,0,0
291	0.06	0.16	0.07	126,126,138	0.0	0.0	0.0	0,0,0
292	0.06	0.15	0.07	126,126,138	0.0	0.0	0.0	0,0,0
293	0.06	0.16	0.08	126,126,138	0.0	0.0	0.0	0,0,0
294	0.06	0.16	0.08	126,126,138	0.0	0.0	0.0	0,0,0
295	0.06	0.15	0.08	126,126,138	0.0	0.0	0.0	0,0,0
296	0.06	0.16	0.08	126,126,138	0.0	0.0	0.0	0,0,0
297	0.05	0.13	0.07	126,126,138	0.0	0.0	0.0	0,0,0
298	0.05	0.14	0.06	126,126,138	0.0	0.0	0.0	0,0,0
299	0.05	0.13	0.06	126,126,138	0.0	0.0	0.0	0,0,0
300	0.05	0.13	0.06	126,126,138	0.0	0.0	0.0	0,0,0
301	0.05	0.15	0.07	126,126,138	0.0	0.0	0.0	0,0,0
302	0.05	0.13	0.07	126,126,138	0.0	0.0	0.0	0,0,0
303	0.06	0.16	0.08	126,126,138	0.0	0.0	0.0	0,0,0
304	0.06	0.15	0.08	126,126,138	0.0	0.0	0.0	0,0,0
305	0.06	0.16	0.08	126,126,138	0.0	0.0	0.0	0,0,0
306	0.06	0.17	0.08	126,126,138	0.0	0.0	0.0	0,0,0
307	0.06	0.15	0.07	126,126,138	0.0	0.0	0.0	0,0,0
308	0.06	0.16	0.07	126,126,138	0.0	0.0	0.0	0,0,0
309	0.05	0.13	0.06	126,126,138	0.0	0.0	0.0	0,0,0
310	0.05	0.14	0.06	126,126,138	0.0	0.0	0.0	0,0,0
311	0.04	0.12	0.05	126,126,138	0.0	0.0	0.0	0,0,0
312	0.04	0.12	0.06	126,126,138	0.0	0.0	0.0	0,0,0
313	0.05	0.13	0.06	126,126,138	0.0	0.0	0.0	0,0,0
314	0.05	0.12	0.06	126,126,138	0.0	0.0	0.0	0,0,0
315	0.05	0.14	0.06	126,126,138	0.0	0.0	0.0	0,0,0
316	0.05	0.13	0.06	126,126,138	0.0	0.0	0.0	0,0,0
317	0.05	0.13	0.06	126,126,138	0.0	0.0	0.0	0,0,0
318	0.05	0.13	0.06	126,126,138	0.0	0.0	0.0	0,0,0
319	0.04	0.10	0.05	126,126,138	0.0	0.0	0.0	0,0,0
320	0.04	0.12	0.05	126,126,138	0.0	0.0	0.0	0,0,0
321	0.03	0.07	0.04	126,126,138	0.0	0.0	0.0	0,0,0
322	0.03	0.09	0.04	126,126,138	0.0	0.0	0.0	0,0,0
323	0.02	0.07	0.03	126,126,138	0.0	0.0	0.0	0,0,0
324	0.02	0.06	0.03	126,126,138	0.0	0.0	0.0	0,0,0
325	0.03	0.09	0.03	126,126,138	0.0	0.0	0.0	0,0,0
326	0.03	0.09	0.04	126,126,138	0.0	0.0	0.0	0,0,0
327	0.03	0.11	0.04	126,126,138	0.0	0.0	0.0	0,0,0
328	0.03	0.11	0.04	126,126,138	0.0	0.0	0.0	0,0,0
329	0.03	0.11	0.04	126,126,138	0.0	0.0	0.0	0,0,0
330	0.03	0.11	0.04	126,126,138	0.0	0.0	0.0	0,0,0
331	0.03	0.10	0.04	126,126,138	0.0	0.0	0.0	0,0,0
332	0.03	0.10	0.03	126,126,138	0.0	0.0	0.0	0,0,0
333	0.03	0.10	0.03	126,126,138	0.0	0.0	0.0	0,0,0
334	0.03	0.10	0.03	126,126,138	0.0	0.0	0.0	0,0,0
335	0.03	0.11	0.04	126,126,138	0.0	0.0	0.0	0,0,0
336	0.03	0.11	0.04	126,126,138	0.0	0.0	0.0	0,0,0
337	0.03	0.12	0.04	126,126,138	0.0	0.0	0.0	0,0,0
338	0.04	0.12	0.05	126,126,138	0.0	0.0	0.0	0,0,0
339	0.04	0.13	0.05	126,126,138	0.0	0.0	0.0	0,0,0
340	0.04	0.13	0.05	126,126,138	0.0	0.0	0.0	0,0,0
341	0.04	0.12	0.05	126,126,138	0.0	0.0	0.0	0,0,0
342	0.03	0.12	0.04	126,126,138	0.0	0.0	0.0	0,0,0
343	0.03	0.11	0.04	126,126,138	0.0	0.0	0.0	0,0,0
344	0.03	0.11	0.04	126,126,138	0.0	0.0	0.0	0,0,0
345	0.03	0.10	0.04	126,126,138	0.0	0.0	0.0	0,0,0
346	0.03	0.10	0.04	126,126,138	0.0	0.0	0.0	0,0,0
347	0.03	0.11	0.04	126,126,138	0.0	0.0	0.0	0,0,0
348	0.03	0.11	0.04	126,126,138	0.0	0.0	0.0	0,0,0
349	0.03	0.12	0.04	126,126,138	0.0	0.0	0.0	0,0,0
350	0.04	0.12	0.05	126,126,138	0.0	0.0	0.0	0,0,0
351	0.04	0.13	0.05	126,126,138	0.0	0.0	0.0	0,0,0
352	0.04	0.13	0.05	126,126,138	0.0	0.0	0.0	0,0,0
353	0.04	0.12	0.05	126,126,138	0.0	0.0	0.0	0,0,0
354	0.03	0.12	0.04	126,126,138	0.0	0.0	0.0	0,0,0
355	0.03	0.11	0.04	126,126,138	0.0	0.0	0.0	0,0,0
356	0.03	0.11	0.04	126,126,138	0.0	0.0	0.0	0,0,0
357	0.03	0.10	0.03	126,126,138	0.0	0.0	0.0	0,0,0
358	0.03	0.10	0.03	126,126,138	0.0	0.0	0.0	0,0,0
359	0.03	0.10	0.03	126,126,138	0.0	0.0	0.0	0,0,0
360	0.03	0.10	0.04	126,126,138	0.0	0.0	0.0	0,0,0
361	0.03	0.11	0.04	126,126,138	0.0	0.0	0.0	0,0,0

362	0.03	0.11	0.04	126,126,138	0.0	0.0	0.0	0,0,0
363	0.03	0.11	0.04	126,126,138	0.0	0.0	0.0	0,0,0
364	0.03	0.11	0.04	126,126,138	0.0	0.0	0.0	0,0,0
365	0.03	0.09	0.04	126,126,138	0.0	0.0	0.0	0,0,0
366	0.03	0.09	0.03	126,126,138	0.0	0.0	0.0	0,0,0
367	0.02	0.06	0.03	126,126,138	0.0	0.0	0.0	0,0,0
368	0.02	0.07	0.03	126,126,138	0.0	0.0	0.0	0,0,0
369	0.02	0.04	0.02	130,126,139	0.0	0.0	0.0	0,0,0
370	0.01	0.04	0.02	130,126,139	0.0	0.0	0.0	0,0,0
371	0.01	0.05	0.01	130,126,139	0.0	0.0	0.0	0,0,0
372	9.32e-03	0.05	0.01	126,126,139	0.0	0.0	0.0	0,0,0
373	0.01	0.06	0.01	126,126,138	0.0	0.0	0.0	0,0,0
374	9.77e-03	0.06	0.01	126,126,138	0.0	0.0	0.0	0,0,0
375	9.94e-03	0.06	0.01	126,126,138	0.0	0.0	0.0	0,0,0
376	9.89e-03	0.06	0.01	126,126,138	0.0	0.0	0.0	0,0,0
377	9.10e-03	0.06	0.01	126,126,138	0.0	0.0	0.0	0,0,0
378	9.24e-03	0.06	0.01	126,126,138	0.0	0.0	0.0	0,0,0
379	7.34e-03	0.06	9.58e-03	130,126,139	0.0	0.0	0.0	0,0,0
380	7.81e-03	0.06	0.01	126,126,138	0.0	0.0	0.0	0,0,0
381	7.62e-03	0.06	9.55e-03	126,126,138	0.0	0.0	0.0	0,0,0
382	8.18e-03	0.06	0.01	126,126,138	0.0	0.0	0.0	0,0,0
383	9.29e-03	0.07	0.01	126,126,138	0.0	0.0	0.0	0,0,0
384	9.79e-03	0.07	0.01	126,126,138	0.0	0.0	0.0	0,0,0
385	0.01	0.07	0.01	126,126,138	0.0	0.0	0.0	0,0,0
386	0.01	0.07	0.01	126,126,138	0.0	0.0	0.0	0,0,0
387	9.93e-03	0.07	0.01	126,126,138	0.0	0.0	0.0	0,0,0
388	9.88e-03	0.07	0.01	126,126,138	0.0	0.0	0.0	0,0,0
389	8.52e-03	0.06	0.01	126,126,138	0.0	0.0	0.0	0,0,0
390	8.59e-03	0.06	0.01	126,126,138	0.0	0.0	0.0	0,0,0
391	6.99e-03	0.06	8.82e-03	126,126,138	0.0	0.0	0.0	0,0,0
392	6.87e-03	0.06	8.67e-03	126,126,138	0.0	0.0	0.0	0,0,0
393	8.85e-03	0.06	0.01	126,126,138	0.0	0.0	0.0	0,0,0
394	8.66e-03	0.06	0.01	126,126,138	0.0	0.0	0.0	0,0,0
395	0.01	0.07	0.01	126,126,138	0.0	0.0	0.0	0,0,0
396	0.01	0.07	0.01	126,126,138	0.0	0.0	0.0	0,0,0
397	0.01	0.07	0.01	126,126,138	0.0	0.0	0.0	0,0,0
398	0.01	0.07	0.01	126,126,138	0.0	0.0	0.0	0,0,0
399	9.91e-03	0.07	0.01	126,126,138	0.0	0.0	0.0	0,0,0
400	9.42e-03	0.07	0.01	126,126,138	0.0	0.0	0.0	0,0,0
401	8.30e-03	0.06	0.01	126,126,138	0.0	0.0	0.0	0,0,0
402	7.77e-03	0.06	9.87e-03	126,126,138	0.0	0.0	0.0	0,0,0
403	8.07e-03	0.06	0.01	126,126,138	0.0	0.0	0.0	0,0,0
404	7.82e-03	0.06	0.01	126,126,138	0.0	0.0	0.0	0,0,0
405	9.48e-03	0.06	0.01	126,126,138	0.0	0.0	0.0	0,0,0
406	9.54e-03	0.06	0.01	126,126,138	0.0	0.0	0.0	0,0,0
407	0.01	0.06	0.01	126,126,138	0.0	0.0	0.0	0,0,0
408	0.01	0.06	0.01	126,126,138	0.0	0.0	0.0	0,0,0
409	9.96e-03	0.06	0.01	126,126,138	0.0	0.0	0.0	0,0,0
410	0.01	0.06	0.01	126,126,138	0.0	0.0	0.0	0,0,0
411	9.35e-03	0.05	0.01	126,126,138	0.0	0.0	0.0	0,0,0
412	0.01	0.05	0.01	130,126,139	0.0	0.0	0.0	0,0,0
413	0.01	0.04	0.02	130,126,139	0.0	0.0	0.0	0,0,0
414	0.02	0.04	0.02	130,126,139	0.0	0.0	0.0	0,0,0
415	0.02	0.06	0.03	126,126,138	0.0	0.0	0.0	0,0,0
416	0.02	0.06	0.03	126,126,138	0.0	0.0	0.0	0,0,0
417	9.89e-03	0.03	0.01	130,126,139	0.0	0.0	0.0	0,0,0
418	9.27e-03	0.04	0.01	126,126,138	0.0	0.0	0.0	0,0,0
419	6.68e-03	0.04	8.76e-03	130,126,139	0.0	0.0	0.0	0,0,0
420	7.09e-03	0.04	9.27e-03	126,126,138	0.0	0.0	0.0	0,0,0
421	5.46e-03	0.04	7.14e-03	124,126,139	0.0	0.0	0.0	0,0,0
422	6.59e-03	0.04	8.63e-03	126,126,138	0.0	0.0	0.0	0,0,0
423	4.61e-03	0.04	6.00e-03	123,126,139	0.0	0.0	0.0	0,0,0
424	6.17e-03	0.04	8.10e-03	126,126,138	0.0	0.0	0.0	0,0,0
425	3.51e-03	0.04	4.50e-03	123,126,139	0.0	0.0	0.0	0,0,0
426	5.72e-03	0.04	7.53e-03	126,126,138	0.0	0.0	0.0	0,0,0
427	3.03e-03	0.04	3.88e-03	123,126,139	0.0	0.0	0.0	0,0,0
428	5.55e-03	0.04	7.29e-03	126,126,138	0.0	0.0	0.0	0,0,0
429	2.73e-03	0.04	3.64e-03	121,126,138	0.0	0.0	0.0	0,0,0
430	5.23e-03	0.05	6.84e-03	126,126,138	0.0	0.0	0.0	0,0,0
431	3.07e-03	0.04	4.06e-03	126,126,138	0.0	0.0	0.0	0,0,0
432	4.83e-03	0.05	6.32e-03	126,126,138	0.0	0.0	0.0	0,0,0
433	3.44e-03	0.04	4.54e-03	126,126,138	0.0	0.0	0.0	0,0,0
434	4.42e-03	0.04	5.82e-03	126,126,138	0.0	0.0	0.0	0,0,0
435	3.71e-03	0.04	4.92e-03	126,126,138	0.0	0.0	0.0	0,0,0
436	4.04e-03	0.04	5.35e-03	126,126,138	0.0	0.0	0.0	0,0,0
437	3.83e-03	0.04	5.09e-03	126,126,138	0.0	0.0	0.0	0,0,0
438	3.65e-03	0.04	4.85e-03	126,126,138	0.0	0.0	0.0	0,0,0
439	4.24e-03	0.04	5.61e-03	126,126,138	0.0	0.0	0.0	0,0,0

440	3.55e-03	0.04	4.70e-03	126,126,138	0.0	0.0	0.0	0,0,0
441	4.69e-03	0.04	6.15e-03	126,126,138	0.0	0.0	0.0	0,0,0
442	3.26e-03	0.04	4.30e-03	126,126,138	0.0	0.0	0.0	0,0,0
443	5.10e-03	0.04	6.67e-03	126,126,138	0.0	0.0	0.0	0,0,0
444	2.85e-03	0.04	3.78e-03	126,126,138	0.0	0.0	0.0	0,0,0
445	5.50e-03	0.04	7.20e-03	126,126,138	0.0	0.0	0.0	0,0,0
446	2.55e-03	0.04	3.40e-03	121,126,138	0.0	0.0	0.0	0,0,0
447	5.82e-03	0.04	7.64e-03	126,126,138	0.0	0.0	0.0	0,0,0
448	3.28e-03	0.04	4.21e-03	123,126,139	0.0	0.0	0.0	0,0,0
449	5.98e-03	0.04	7.87e-03	126,126,138	0.0	0.0	0.0	0,0,0
450	3.78e-03	0.04	4.86e-03	123,126,139	0.0	0.0	0.0	0,0,0
451	6.43e-03	0.04	8.44e-03	126,126,138	0.0	0.0	0.0	0,0,0
452	4.87e-03	0.04	6.35e-03	123,126,139	0.0	0.0	0.0	0,0,0
453	6.84e-03	0.04	8.95e-03	126,126,138	0.0	0.0	0.0	0,0,0
454	5.73e-03	0.04	7.50e-03	124,126,139	0.0	0.0	0.0	0,0,0
455	7.32e-03	0.04	9.58e-03	126,126,138	0.0	0.0	0.0	0,0,0
456	6.89e-03	0.04	9.04e-03	130,126,139	0.0	0.0	0.0	0,0,0
457	9.43e-03	0.04	0.01	126,126,138	0.0	0.0	0.0	0,0,0
458	9.98e-03	0.03	0.01	130,126,139	0.0	0.0	0.0	0,0,0
459	0.02	0.06	0.03	126,126,138	0.0	0.0	0.0	0,0,0
460	0.02	0.06	0.03	126,126,138	0.0	0.0	0.0	0,0,0
461	0.03	0.08	0.05	126,126,138	0.0	0.0	0.0	0,0,0
462	0.03	0.11	0.05	126,126,138	0.0	0.0	0.0	0,0,0
463	0.03	0.08	0.04	126,126,138	0.0	0.0	0.0	0,0,0
464	0.02	0.08	0.03	126,126,138	0.0	0.0	0.0	0,0,0
465	0.02	0.07	0.03	126,126,138	0.0	0.0	0.0	0,0,0
466	0.02	0.07	0.03	126,126,138	0.0	0.0	0.0	0,0,0
467	0.02	0.07	0.03	126,126,138	0.0	0.0	0.0	0,0,0
468	0.02	0.07	0.03	126,126,138	0.0	0.0	0.0	0,0,0
469	0.02	0.07	0.03	126,126,138	0.0	0.0	0.0	0,0,0
470	0.02	0.07	0.03	126,126,138	0.0	0.0	0.0	0,0,0
471	0.02	0.07	0.03	126,126,138	0.0	0.0	0.0	0,0,0
472	0.02	0.07	0.03	126,126,138	0.0	0.0	0.0	0,0,0
473	0.02	0.07	0.03	126,126,138	0.0	0.0	0.0	0,0,0
474	0.02	0.07	0.03	126,126,138	0.0	0.0	0.0	0,0,0
475	0.02	0.07	0.03	126,126,138	0.0	0.0	0.0	0,0,0
476	0.02	0.07	0.03	126,126,138	0.0	0.0	0.0	0,0,0
477	0.02	0.07	0.03	126,126,138	0.0	0.0	0.0	0,0,0
478	0.02	0.07	0.03	126,126,138	0.0	0.0	0.0	0,0,0
479	0.02	0.07	0.03	126,126,138	0.0	0.0	0.0	0,0,0
480	0.02	0.07	0.03	126,126,138	0.0	0.0	0.0	0,0,0
481	0.02	0.07	0.03	126,126,138	0.0	0.0	0.0	0,0,0
482	0.02	0.07	0.03	126,126,138	0.0	0.0	0.0	0,0,0
483	0.02	0.07	0.03	126,126,138	0.0	0.0	0.0	0,0,0
484	0.02	0.07	0.03	126,126,138	0.0	0.0	0.0	0,0,0
485	0.02	0.07	0.03	126,126,138	0.0	0.0	0.0	0,0,0
486	0.02	0.07	0.03	126,126,138	0.0	0.0	0.0	0,0,0
487	0.02	0.07	0.03	126,126,138	0.0	0.0	0.0	0,0,0
488	0.02	0.07	0.03	126,126,138	0.0	0.0	0.0	0,0,0
489	0.02	0.07	0.03	126,126,138	0.0	0.0	0.0	0,0,0
490	0.02	0.07	0.03	126,126,138	0.0	0.0	0.0	0,0,0
491	0.02	0.07	0.03	126,126,138	0.0	0.0	0.0	0,0,0
492	0.02	0.07	0.03	126,126,138	0.0	0.0	0.0	0,0,0
493	0.02	0.07	0.03	126,126,138	0.0	0.0	0.0	0,0,0
494	0.02	0.07	0.03	126,126,138	0.0	0.0	0.0	0,0,0
495	0.02	0.07	0.03	126,126,138	0.0	0.0	0.0	0,0,0
496	0.02	0.07	0.03	126,126,138	0.0	0.0	0.0	0,0,0
497	0.02	0.07	0.03	126,126,138	0.0	0.0	0.0	0,0,0
498	0.02	0.07	0.03	126,126,138	0.0	0.0	0.0	0,0,0
499	0.02	0.07	0.03	126,126,138	0.0	0.0	0.0	0,0,0
500	0.02	0.07	0.03	126,126,138	0.0	0.0	0.0	0,0,0
501	0.02	0.07	0.03	126,126,138	0.0	0.0	0.0	0,0,0
502	0.02	0.07	0.03	126,126,138	0.0	0.0	0.0	0,0,0
503	0.02	0.08	0.03	126,126,138	0.0	0.0	0.0	0,0,0
504	0.03	0.08	0.04	126,126,138	0.0	0.0	0.0	0,0,0
505	0.03	0.11	0.05	126,126,138	0.0	0.0	0.0	0,0,0
506	0.03	0.08	0.05	126,126,138	0.0	0.0	0.0	0,0,0
507	0.03	0.06	0.04	126,126,138	0.0	0.0	0.0	0,0,0
508	0.03	0.08	0.05	126,126,138	0.0	0.0	0.0	0,0,0
509	0.03	0.07	0.04	126,126,138	0.0	0.0	0.0	0,0,0
510	0.03	0.07	0.04	126,126,138	0.0	0.0	0.0	0,0,0
511	0.03	0.07	0.04	126,126,138	0.0	0.0	0.0	0,0,0
512	0.03	0.07	0.04	126,126,138	0.0	0.0	0.0	0,0,0
513	0.03	0.07	0.04	126,126,138	0.0	0.0	0.0	0,0,0
514	0.03	0.07	0.04	126,126,138	0.0	0.0	0.0	0,0,0
515	0.03	0.07	0.04	126,126,138	0.0	0.0	0.0	0,0,0
516	0.03	0.07	0.04	126,126,138	0.0	0.0	0.0	0,0,0
517	0.03	0.07	0.04	126,126,138	0.0	0.0	0.0	0,0,0

518	0.03	0.07	0.04	126,126,138	0.0	0.0	0.0	0,0,0
519	0.03	0.07	0.04	126,126,138	0.0	0.0	0.0	0,0,0
520	0.03	0.07	0.04	126,126,138	0.0	0.0	0.0	0,0,0
521	0.03	0.07	0.04	126,126,138	0.0	0.0	0.0	0,0,0
522	0.03	0.07	0.04	126,126,138	0.0	0.0	0.0	0,0,0
523	0.03	0.07	0.04	126,126,138	0.0	0.0	0.0	0,0,0
524	0.03	0.07	0.04	126,126,138	0.0	0.0	0.0	0,0,0
525	0.03	0.07	0.04	126,126,138	0.0	0.0	0.0	0,0,0
526	0.03	0.07	0.04	126,126,138	0.0	0.0	0.0	0,0,0
527	0.03	0.07	0.04	126,126,138	0.0	0.0	0.0	0,0,0
528	0.03	0.07	0.04	126,126,138	0.0	0.0	0.0	0,0,0
529	0.03	0.07	0.04	126,126,138	0.0	0.0	0.0	0,0,0
530	0.03	0.07	0.04	126,126,138	0.0	0.0	0.0	0,0,0
531	0.03	0.07	0.04	126,126,138	0.0	0.0	0.0	0,0,0
532	0.03	0.07	0.04	126,126,138	0.0	0.0	0.0	0,0,0
533	0.03	0.07	0.04	126,126,138	0.0	0.0	0.0	0,0,0
534	0.03	0.07	0.04	126,126,138	0.0	0.0	0.0	0,0,0
535	0.03	0.07	0.04	126,126,138	0.0	0.0	0.0	0,0,0
536	0.03	0.07	0.04	126,126,138	0.0	0.0	0.0	0,0,0
537	0.03	0.07	0.04	126,126,138	0.0	0.0	0.0	0,0,0
538	0.03	0.07	0.04	126,126,138	0.0	0.0	0.0	0,0,0
539	0.03	0.07	0.04	126,126,138	0.0	0.0	0.0	0,0,0
540	0.03	0.07	0.04	126,126,138	0.0	0.0	0.0	0,0,0
541	0.03	0.07	0.04	126,126,138	0.0	0.0	0.0	0,0,0
542	0.03	0.07	0.04	126,126,138	0.0	0.0	0.0	0,0,0
543	0.03	0.07	0.04	126,126,138	0.0	0.0	0.0	0,0,0
544	0.03	0.07	0.04	126,126,138	0.0	0.0	0.0	0,0,0
545	0.03	0.07	0.04	126,126,138	0.0	0.0	0.0	0,0,0
546	0.03	0.07	0.04	126,126,138	0.0	0.0	0.0	0,0,0
547	0.03	0.07	0.04	126,126,138	0.0	0.0	0.0	0,0,0
548	0.03	0.07	0.04	126,126,138	0.0	0.0	0.0	0,0,0
549	0.03	0.07	0.04	126,126,138	0.0	0.0	0.0	0,0,0
550	0.03	0.07	0.04	126,126,138	0.0	0.0	0.0	0,0,0
551	0.03	0.08	0.05	126,126,138	0.0	0.0	0.0	0,0,0
552	0.03	0.07	0.04	126,126,138	0.0	0.0	0.0	0,0,0
1045	0.03	0.05	0.04	126,126,138	0.0	0.0	0.0	0,0,0
1046	0.01	0.02	0.02	121,130,138	0.0	0.0	0.0	0,0,0
1047	0.02	0.04	0.03	126,130,138	0.0	0.0	0.0	0,0,0
1048	0.01	0.02	0.02	121,130,138	0.0	0.0	0.0	0,0,0
1049	0.03	0.04	0.03	130,130,139	0.0	0.0	0.0	0,0,0
1050	0.01	0.02	0.02	121,130,138	0.0	0.0	0.0	0,0,0
1051	0.03	0.04	0.03	126,130,138	0.0	0.0	0.0	0,0,0
1052	0.01	0.02	0.02	121,130,138	0.0	0.0	0.0	0,0,0
1053	0.02	0.04	0.03	130,130,139	0.0	0.0	0.0	0,0,0
1054	0.01	0.03	0.02	121,130,138	0.0	0.0	0.0	0,0,0
1055	0.02	0.05	0.03	126,130,138	0.0	0.0	0.0	0,0,0
1056	0.01	0.03	0.02	123,130,139	0.0	0.0	0.0	0,0,0
1057	0.02	0.04	0.02	130,130,139	0.0	0.0	0.0	0,0,0
1058	0.01	0.03	0.02	123,130,139	0.0	0.0	0.0	0,0,0
1059	0.02	0.04	0.02	130,130,139	0.0	0.0	0.0	0,0,0
1060	0.01	0.03	0.02	123,130,139	0.0	0.0	0.0	0,0,0
1061	0.02	0.04	0.02	130,130,139	0.0	0.0	0.0	0,0,0
1062	0.01	0.03	0.02	123,130,139	0.0	0.0	0.0	0,0,0
1063	0.02	0.04	0.02	126,130,138	0.0	0.0	0.0	0,0,0
1064	0.01	0.03	0.02	123,130,139	0.0	0.0	0.0	0,0,0
1065	0.01	0.04	0.02	124,130,139	0.0	0.0	0.0	0,0,0
1066	0.02	0.04	0.02	121,130,138	0.0	0.0	0.0	0,0,0
1067	0.01	0.04	0.02	123,130,139	0.0	0.0	0.0	0,0,0
1068	0.02	0.04	0.02	124,130,139	0.0	0.0	0.0	0,0,0
1069	0.01	0.03	0.02	123,130,139	0.0	0.0	0.0	0,0,0
1070	0.02	0.04	0.03	126,130,138	0.0	0.0	0.0	0,0,0
1071	0.01	0.03	0.02	123,130,139	0.0	0.0	0.0	0,0,0
1072	0.02	0.04	0.03	130,130,139	0.0	0.0	0.0	0,0,0
1073	0.01	0.03	0.02	123,130,139	0.0	0.0	0.0	0,0,0
1074	0.02	0.04	0.03	130,130,139	0.0	0.0	0.0	0,0,0
1075	0.01	0.03	0.02	123,130,139	0.0	0.0	0.0	0,0,0
1076	0.02	0.04	0.03	130,130,139	0.0	0.0	0.0	0,0,0
1077	0.01	0.03	0.02	123,130,139	0.0	0.0	0.0	0,0,0
1078	0.03	0.05	0.03	126,130,138	0.0	0.0	0.0	0,0,0
1079	0.01	0.03	0.02	121,130,138	0.0	0.0	0.0	0,0,0
1080	0.03	0.05	0.03	130,130,139	0.0	0.0	0.0	0,0,0
1081	0.01	0.02	0.02	121,130,138	0.0	0.0	0.0	0,0,0
1082	0.03	0.04	0.04	126,130,138	0.0	0.0	0.0	0,0,0
1083	0.01	0.02	0.02	121,130,138	0.0	0.0	0.0	0,0,0
1084	0.03	0.04	0.04	130,130,139	0.0	0.0	0.0	0,0,0
1085	0.01	0.02	0.02	121,130,138	0.0	0.0	0.0	0,0,0
1086	0.03	0.04	0.04	126,130,138	0.0	0.0	0.0	0,0,0
1087	0.01	0.02	0.02	121,130,138	0.0	0.0	0.0	0,0,0

1088	0.03	0.05	0.04	126,126,138	0.0	0.0	0.0	0,0,0
1089	0.03	0.04	0.04	126,126,138	0.0	0.0	0.0	0,0,0
1090	0.01	0.02	0.02	123,124,139	0.0	0.0	0.0	0,0,0
1091	0.02	0.03	0.03	126,130,138	0.0	0.0	0.0	0,0,0
1092	0.01	0.02	0.02	123,123,139	0.0	0.0	0.0	0,0,0
1093	0.02	0.03	0.03	126,126,138	0.0	0.0	0.0	0,0,0
1094	0.01	0.02	0.02	123,123,139	0.0	0.0	0.0	0,0,0
1095	0.02	0.03	0.03	126,126,138	0.0	0.0	0.0	0,0,0
1096	0.01	0.02	0.02	123,123,139	0.0	0.0	0.0	0,0,0
1097	0.02	0.03	0.03	130,126,139	0.0	0.0	0.0	0,0,0
1098	0.01	0.02	0.02	123,130,139	0.0	0.0	0.0	0,0,0
1099	0.02	0.03	0.02	126,126,138	0.0	0.0	0.0	0,0,0
1100	0.01	0.02	0.02	123,130,139	0.0	0.0	0.0	0,0,0
1101	0.02	0.03	0.02	126,130,138	0.0	0.0	0.0	0,0,0
1102	0.01	0.02	0.02	123,130,139	0.0	0.0	0.0	0,0,0
1103	0.01	0.02	0.02	126,126,138	0.0	0.0	0.0	0,0,0
1104	0.01	0.02	0.02	123,123,139	0.0	0.0	0.0	0,0,0
1105	0.01	0.02	0.02	126,126,138	0.0	0.0	0.0	0,0,0
1106	0.01	0.02	0.02	123,124,139	0.0	0.0	0.0	0,0,0
1107	0.01	0.02	0.02	126,126,138	0.0	0.0	0.0	0,0,0
1108	0.01	0.02	0.02	124,130,139	0.0	0.0	0.0	0,0,0
1109	0.01	0.03	0.02	123,130,139	0.0	0.0	0.0	0,0,0
1110	0.01	0.03	0.02	123,130,139	0.0	0.0	0.0	0,0,0
1111	0.01	0.03	0.02	123,130,139	0.0	0.0	0.0	0,0,0
1112	0.01	0.03	0.02	130,130,139	0.0	0.0	0.0	0,0,0
1113	0.01	0.02	0.02	124,130,139	0.0	0.0	0.0	0,0,0
1114	0.02	0.03	0.02	126,126,138	0.0	0.0	0.0	0,0,0
1115	0.01	0.02	0.02	123,124,139	0.0	0.0	0.0	0,0,0
1116	0.02	0.03	0.02	126,126,138	0.0	0.0	0.0	0,0,0
1117	0.01	0.02	0.02	123,123,139	0.0	0.0	0.0	0,0,0
1118	0.02	0.03	0.02	126,126,138	0.0	0.0	0.0	0,0,0
1119	0.01	0.02	0.02	123,130,139	0.0	0.0	0.0	0,0,0
1120	0.02	0.03	0.02	126,130,138	0.0	0.0	0.0	0,0,0
1121	0.01	0.02	0.02	123,130,139	0.0	0.0	0.0	0,0,0
1122	0.02	0.03	0.03	126,126,138	0.0	0.0	0.0	0,0,0
1123	0.01	0.02	0.02	123,130,139	0.0	0.0	0.0	0,0,0
1124	0.02	0.03	0.03	130,126,139	0.0	0.0	0.0	0,0,0
1125	0.01	0.02	0.02	123,123,139	0.0	0.0	0.0	0,0,0
1126	0.02	0.03	0.03	126,126,138	0.0	0.0	0.0	0,0,0
1127	0.01	0.02	0.02	123,123,139	0.0	0.0	0.0	0,0,0
1128	0.02	0.03	0.03	126,126,138	0.0	0.0	0.0	0,0,0
1129	0.01	0.02	0.02	123,123,139	0.0	0.0	0.0	0,0,0
1130	0.02	0.03	0.03	126,126,138	0.0	0.0	0.0	0,0,0
1131	0.01	0.02	0.02	123,124,139	0.0	0.0	0.0	0,0,0
1132	0.03	0.04	0.04	126,126,138	0.0	0.0	0.0	0,0,0
1133	0.03	0.04	0.03	130,130,139	0.0	0.0	0.0	0,0,0
1134	0.01	0.02	0.02	123,130,139	0.0	0.0	0.0	0,0,0
1135	0.02	0.03	0.03	130,130,139	0.0	0.0	0.0	0,0,0
1136	0.01	0.02	0.02	130,123,139	0.0	0.0	0.0	0,0,0
1137	0.02	0.03	0.03	130,130,139	0.0	0.0	0.0	0,0,0
1138	0.01	0.02	0.02	130,123,139	0.0	0.0	0.0	0,0,0
1139	0.02	0.03	0.02	130,130,139	0.0	0.0	0.0	0,0,0
1140	0.01	0.02	0.02	126,124,138	0.0	0.0	0.0	0,0,0
1141	0.02	0.03	0.02	130,130,139	0.0	0.0	0.0	0,0,0
1142	0.01	0.02	0.02	130,123,139	0.0	0.0	0.0	0,0,0
1143	0.02	0.03	0.02	130,130,139	0.0	0.0	0.0	0,0,0
1144	0.01	0.02	0.02	130,123,139	0.0	0.0	0.0	0,0,0
1145	0.02	0.03	0.02	130,130,139	0.0	0.0	0.0	0,0,0
1146	0.01	0.02	0.02	126,123,138	0.0	0.0	0.0	0,0,0
1147	0.01	0.02	0.02	130,130,139	0.0	0.0	0.0	0,0,0
1148	0.01	0.02	0.02	126,123,138	0.0	0.0	0.0	0,0,0
1149	0.01	0.02	0.02	124,130,139	0.0	0.0	0.0	0,0,0
1150	0.01	0.02	0.02	126,123,138	0.0	0.0	0.0	0,0,0
1151	0.01	0.02	0.02	126,130,138	0.0	0.0	0.0	0,0,0
1152	0.01	0.02	0.02	126,123,138	0.0	0.0	0.0	0,0,0
1153	0.01	0.02	0.02	126,123,138	0.0	0.0	0.0	0,0,0
1154	0.01	0.02	0.02	130,123,139	0.0	0.0	0.0	0,0,0
1155	0.01	0.02	0.02	130,123,139	0.0	0.0	0.0	0,0,0
1156	0.01	0.02	0.02	130,124,139	0.0	0.0	0.0	0,0,0
1157	0.01	0.02	0.02	126,123,138	0.0	0.0	0.0	0,0,0
1158	0.01	0.03	0.02	123,130,139	0.0	0.0	0.0	0,0,0
1159	0.01	0.02	0.02	126,123,138	0.0	0.0	0.0	0,0,0
1160	0.01	0.03	0.02	130,130,139	0.0	0.0	0.0	0,0,0
1161	0.01	0.02	0.02	126,123,138	0.0	0.0	0.0	0,0,0
1162	0.02	0.03	0.02	130,130,139	0.0	0.0	0.0	0,0,0
1163	0.01	0.02	0.02	126,124,138	0.0	0.0	0.0	0,0,0
1164	0.02	0.03	0.02	130,130,139	0.0	0.0	0.0	0,0,0
1165	0.01	0.02	0.02	130,123,139	0.0	0.0	0.0	0,0,0

1166	0.02	0.03	0.02	130,130,139	0.0	0.0	0.0	0,0,0
1167	0.01	0.02	0.02	130,123,139	0.0	0.0	0.0	0,0,0
1168	0.02	0.03	0.03	130,130,139	0.0	0.0	0.0	0,0,0
1169	0.01	0.02	0.02	126,123,138	0.0	0.0	0.0	0,0,0
1170	0.02	0.03	0.03	130,130,139	0.0	0.0	0.0	0,0,0
1171	0.01	0.02	0.02	130,123,139	0.0	0.0	0.0	0,0,0
1172	0.02	0.03	0.03	130,130,139	0.0	0.0	0.0	0,0,0
1173	0.01	0.02	0.02	130,123,139	0.0	0.0	0.0	0,0,0
1174	0.02	0.03	0.03	130,130,139	0.0	0.0	0.0	0,0,0
1175	0.01	0.02	0.02	123,130,139	0.0	0.0	0.0	0,0,0
1176	0.03	0.04	0.04	130,130,139	0.0	0.0	0.0	0,0,0
1177	0.02	0.04	0.03	130,126,139	0.0	0.0	0.0	0,0,0
1178	0.01	0.02	0.02	121,124,138	0.0	0.0	0.0	0,0,0
1179	0.02	0.03	0.03	130,130,139	0.0	0.0	0.0	0,0,0
1180	0.01	0.02	0.02	126,123,138	0.0	0.0	0.0	0,0,0
1181	0.02	0.03	0.02	130,130,139	0.0	0.0	0.0	0,0,0
1182	0.01	0.02	0.02	126,123,138	0.0	0.0	0.0	0,0,0
1183	0.02	0.03	0.02	130,130,139	0.0	0.0	0.0	0,0,0
1184	0.01	0.02	0.02	126,124,138	0.0	0.0	0.0	0,0,0
1185	0.02	0.03	0.02	130,130,139	0.0	0.0	0.0	0,0,0
1186	0.01	0.02	0.02	126,123,138	0.0	0.0	0.0	0,0,0
1187	0.02	0.03	0.02	130,130,139	0.0	0.0	0.0	0,0,0
1188	0.01	0.02	0.02	126,123,138	0.0	0.0	0.0	0,0,0
1189	0.02	0.03	0.02	130,130,139	0.0	0.0	0.0	0,0,0
1190	0.01	0.02	0.02	126,123,138	0.0	0.0	0.0	0,0,0
1191	0.01	0.03	0.02	130,130,139	0.0	0.0	0.0	0,0,0
1192	0.01	0.02	0.02	126,124,138	0.0	0.0	0.0	0,0,0
1193	0.01	0.02	0.02	130,130,139	0.0	0.0	0.0	0,0,0
1194	0.01	0.02	0.02	126,124,138	0.0	0.0	0.0	0,0,0
1195	0.01	0.02	0.02	126,124,138	0.0	0.0	0.0	0,0,0
1196	0.01	0.02	0.02	126,130,138	0.0	0.0	0.0	0,0,0
1197	0.01	0.02	0.02	126,123,138	0.0	0.0	0.0	0,0,0
1198	0.01	0.02	0.02	126,124,138	0.0	0.0	0.0	0,0,0
1199	0.01	0.02	0.02	126,124,138	0.0	0.0	0.0	0,0,0
1200	0.01	0.02	0.02	126,123,138	0.0	0.0	0.0	0,0,0
1201	0.01	0.02	0.02	126,124,138	0.0	0.0	0.0	0,0,0
1202	0.01	0.02	0.02	123,124,139	0.0	0.0	0.0	0,0,0
1203	0.01	0.02	0.02	126,124,138	0.0	0.0	0.0	0,0,0
1204	0.01	0.03	0.02	130,130,139	0.0	0.0	0.0	0,0,0
1205	0.01	0.02	0.02	126,124,138	0.0	0.0	0.0	0,0,0
1206	0.02	0.03	0.02	130,130,139	0.0	0.0	0.0	0,0,0
1207	0.01	0.02	0.02	126,123,138	0.0	0.0	0.0	0,0,0
1208	0.02	0.03	0.02	130,130,139	0.0	0.0	0.0	0,0,0
1209	0.01	0.02	0.02	126,123,138	0.0	0.0	0.0	0,0,0
1210	0.02	0.03	0.02	130,130,139	0.0	0.0	0.0	0,0,0
1211	0.01	0.02	0.02	126,123,138	0.0	0.0	0.0	0,0,0
1212	0.02	0.03	0.02	130,130,139	0.0	0.0	0.0	0,0,0
1213	0.01	0.02	0.02	126,124,138	0.0	0.0	0.0	0,0,0
1214	0.02	0.03	0.02	130,130,139	0.0	0.0	0.0	0,0,0
1215	0.01	0.02	0.02	126,123,138	0.0	0.0	0.0	0,0,0
1216	0.02	0.03	0.03	130,130,139	0.0	0.0	0.0	0,0,0
1217	0.01	0.02	0.02	126,123,138	0.0	0.0	0.0	0,0,0
1218	0.02	0.03	0.03	130,130,139	0.0	0.0	0.0	0,0,0
1219	0.01	0.02	0.02	121,124,138	0.0	0.0	0.0	0,0,0
1220	0.03	0.04	0.03	130,126,139	0.0	0.0	0.0	0,0,0
1221	0.02	0.03	0.03	130,130,139	0.0	0.0	0.0	0,0,0
1222	0.01	0.02	0.02	123,130,139	0.0	0.0	0.0	0,0,0
1223	0.01	0.02	0.02	130,130,139	0.0	0.0	0.0	0,0,0
1224	0.01	0.02	0.02	126,124,138	0.0	0.0	0.0	0,0,0
1225	0.01	0.02	0.02	124,130,139	0.0	0.0	0.0	0,0,0
1226	0.01	0.02	0.02	126,124,139	0.0	0.0	0.0	0,0,0
1227	0.01	0.02	0.02	124,124,139	0.0	0.0	0.0	0,0,0
1228	0.01	0.02	0.02	123,130,139	0.0	0.0	0.0	0,0,0
1229	0.01	0.02	0.02	123,124,139	0.0	0.0	0.0	0,0,0
1230	0.01	0.02	0.02	123,124,139	0.0	0.0	0.0	0,0,0
1231	0.01	0.02	0.02	124,123,139	0.0	0.0	0.0	0,0,0
1232	0.01	0.02	0.02	123,123,139	0.0	0.0	0.0	0,0,0
1233	0.01	0.02	0.02	130,130,139	0.0	0.0	0.0	0,0,0
1234	0.01	0.02	0.02	123,123,139	0.0	0.0	0.0	0,0,0
1235	0.01	0.02	0.02	124,124,139	0.0	0.0	0.0	0,0,0
1236	0.01	0.02	0.02	123,123,139	0.0	0.0	0.0	0,0,0
1237	0.01	0.02	0.02	123,123,139	0.0	0.0	0.0	0,0,0
1238	0.01	0.02	0.02	123,130,139	0.0	0.0	0.0	0,0,0
1239	0.01	0.02	0.02	123,123,139	0.0	0.0	0.0	0,0,0
1240	0.01	0.02	0.02	123,130,139	0.0	0.0	0.0	0,0,0
1241	0.01	0.02	0.02	123,123,139	0.0	0.0	0.0	0,0,0
1242	0.01	0.02	0.02	123,124,139	0.0	0.0	0.0	0,0,0
1243	0.01	0.02	0.02	123,124,139	0.0	0.0	0.0	0,0,0

1244	0.01	0.02	0.02	123,123,139	0.0	0.0	0.0	0,0,0
1245	0.01	0.02	0.02	123,130,139	0.0	0.0	0.0	0,0,0
1246	0.01	0.02	0.02	123,123,139	0.0	0.0	0.0	0,0,0
1247	0.01	0.02	0.02	123,124,139	0.0	0.0	0.0	0,0,0
1248	0.01	0.02	0.02	123,123,139	0.0	0.0	0.0	0,0,0
1249	0.01	0.02	0.02	123,123,139	0.0	0.0	0.0	0,0,0
1250	0.01	0.02	0.02	130,124,139	0.0	0.0	0.0	0,0,0
1251	0.01	0.02	0.02	123,123,139	0.0	0.0	0.0	0,0,0
1252	0.01	0.02	0.02	130,130,139	0.0	0.0	0.0	0,0,0
1253	0.01	0.02	0.02	123,123,139	0.0	0.0	0.0	0,0,0
1254	0.01	0.02	0.02	130,124,139	0.0	0.0	0.0	0,0,0
1255	0.01	0.02	0.02	123,124,139	0.0	0.0	0.0	0,0,0
1256	0.01	0.02	0.02	123,124,139	0.0	0.0	0.0	0,0,0
1257	0.01	0.02	0.02	126,130,139	0.0	0.0	0.0	0,0,0
1258	0.01	0.02	0.02	124,124,139	0.0	0.0	0.0	0,0,0
1259	0.01	0.02	0.02	126,124,138	0.0	0.0	0.0	0,0,0
1260	0.01	0.02	0.02	124,130,139	0.0	0.0	0.0	0,0,0
1261	0.01	0.02	0.02	126,124,138	0.0	0.0	0.0	0,0,0
1262	0.01	0.02	0.02	130,130,139	0.0	0.0	0.0	0,0,0
1263	0.01	0.02	0.02	123,130,139	0.0	0.0	0.0	0,0,0
1264	0.02	0.03	0.03	130,130,139	0.0	0.0	0.0	0,0,0
1757	0.03	0.05	0.05	130,126,139	0.0	0.0	0.0	0,0,0
1758	0.01	0.02	0.02	121,130,138	0.0	0.0	0.0	0,0,0
1759	0.03	0.04	0.04	130,126,139	0.0	0.0	0.0	0,0,0
1760	0.01	0.02	0.02	121,126,138	0.0	0.0	0.0	0,0,0
1761	0.03	0.04	0.03	130,130,139	0.0	0.0	0.0	0,0,0
1762	0.01	0.02	0.02	121,126,138	0.0	0.0	0.0	0,0,0
1763	0.02	0.04	0.03	130,130,139	0.0	0.0	0.0	0,0,0
1764	0.01	0.02	0.02	121,126,138	0.0	0.0	0.0	0,0,0
1765	0.02	0.04	0.03	130,130,139	0.0	0.0	0.0	0,0,0
1766	0.01	0.02	0.02	123,130,139	0.0	0.0	0.0	0,0,0
1767	0.02	0.05	0.03	126,130,138	0.0	0.0	0.0	0,0,0
1768	0.01	0.02	0.02	123,130,139	0.0	0.0	0.0	0,0,0
1769	0.02	0.04	0.03	130,130,139	0.0	0.0	0.0	0,0,0
1770	0.01	0.02	0.02	121,130,138	0.0	0.0	0.0	0,0,0
1771	0.02	0.03	0.02	130,130,139	0.0	0.0	0.0	0,0,0
1772	0.01	0.02	0.02	123,130,139	0.0	0.0	0.0	0,0,0
1773	0.02	0.03	0.02	130,130,139	0.0	0.0	0.0	0,0,0
1774	0.01	0.03	0.02	123,130,139	0.0	0.0	0.0	0,0,0
1775	0.02	0.03	0.02	123,130,139	0.0	0.0	0.0	0,0,0
1776	0.01	0.03	0.02	123,130,139	0.0	0.0	0.0	0,0,0
1777	0.01	0.03	0.02	123,130,139	0.0	0.0	0.0	0,0,0
1778	0.02	0.04	0.02	126,130,138	0.0	0.0	0.0	0,0,0
1779	0.01	0.04	0.02	123,130,139	0.0	0.0	0.0	0,0,0
1780	0.02	0.04	0.02	123,130,139	0.0	0.0	0.0	0,0,0
1781	0.01	0.03	0.02	123,130,139	0.0	0.0	0.0	0,0,0
1782	0.02	0.03	0.02	123,130,139	0.0	0.0	0.0	0,0,0
1783	0.01	0.03	0.02	123,130,139	0.0	0.0	0.0	0,0,0
1784	0.02	0.03	0.03	130,130,139	0.0	0.0	0.0	0,0,0
1785	0.01	0.02	0.02	123,130,139	0.0	0.0	0.0	0,0,0
1786	0.02	0.04	0.03	130,130,139	0.0	0.0	0.0	0,0,0
1787	0.01	0.02	0.02	123,130,139	0.0	0.0	0.0	0,0,0
1788	0.02	0.04	0.03	130,130,139	0.0	0.0	0.0	0,0,0
1789	0.01	0.02	0.02	123,130,139	0.0	0.0	0.0	0,0,0
1790	0.03	0.05	0.04	126,130,138	0.0	0.0	0.0	0,0,0
1791	0.01	0.02	0.02	123,130,139	0.0	0.0	0.0	0,0,0
1792	0.03	0.05	0.03	130,130,139	0.0	0.0	0.0	0,0,0
1793	0.01	0.02	0.02	121,126,138	0.0	0.0	0.0	0,0,0
1794	0.03	0.04	0.04	130,130,139	0.0	0.0	0.0	0,0,0
1795	0.01	0.02	0.02	121,126,138	0.0	0.0	0.0	0,0,0
1796	0.03	0.04	0.04	130,130,139	0.0	0.0	0.0	0,0,0
1797	0.01	0.02	0.02	121,126,138	0.0	0.0	0.0	0,0,0
1798	0.03	0.04	0.04	130,126,139	0.0	0.0	0.0	0,0,0
1799	0.01	0.02	0.02	121,130,138	0.0	0.0	0.0	0,0,0
1800	0.04	0.05	0.05	130,126,139	0.0	0.0	0.0	0,0,0
1801	0.03	0.04	0.04	126,130,138	0.0	0.0	0.0	0,0,0
1802	0.01	0.02	0.02	130,130,139	0.0	0.0	0.0	0,0,0
1803	0.02	0.03	0.03	126,130,138	0.0	0.0	0.0	0,0,0
1804	0.01	0.02	0.02	130,124,139	0.0	0.0	0.0	0,0,0
1805	0.02	0.03	0.03	126,126,138	0.0	0.0	0.0	0,0,0
1806	0.01	0.02	0.02	130,123,139	0.0	0.0	0.0	0,0,0
1807	0.02	0.03	0.03	126,126,138	0.0	0.0	0.0	0,0,0
1808	0.01	0.02	0.02	123,130,139	0.0	0.0	0.0	0,0,0
1809	0.02	0.03	0.02	130,130,139	0.0	0.0	0.0	0,0,0
1810	0.01	0.02	0.02	123,126,139	0.0	0.0	0.0	0,0,0
1811	0.02	0.03	0.02	126,126,138	0.0	0.0	0.0	0,0,0
1812	0.01	0.02	0.02	123,126,139	0.0	0.0	0.0	0,0,0
1813	0.02	0.02	0.02	126,130,138	0.0	0.0	0.0	0,0,0

1814	0.01	0.02	0.02	130,121,139	0.0	0.0	0.0	0,0,0
1815	0.01	0.02	0.02	126,121,138	0.0	0.0	0.0	0,0,0
1816	0.01	0.02	0.02	130,121,139	0.0	0.0	0.0	0,0,0
1817	0.01	0.02	0.02	130,126,139	0.0	0.0	0.0	0,0,0
1818	0.01	0.02	0.02	130,121,139	0.0	0.0	0.0	0,0,0
1819	0.01	0.02	0.02	123,126,139	0.0	0.0	0.0	0,0,0
1820	0.01	0.02	0.02	130,126,139	0.0	0.0	0.0	0,0,0
1821	0.01	0.02	0.02	123,126,139	0.0	0.0	0.0	0,0,0
1822	0.01	0.02	0.02	123,126,139	0.0	0.0	0.0	0,0,0
1823	0.01	0.02	0.02	123,126,139	0.0	0.0	0.0	0,0,0
1824	0.01	0.02	0.02	123,126,139	0.0	0.0	0.0	0,0,0
1825	0.01	0.02	0.02	130,126,139	0.0	0.0	0.0	0,0,0
1826	0.01	0.02	0.02	121,126,138	0.0	0.0	0.0	0,0,0
1827	0.01	0.02	0.02	130,121,139	0.0	0.0	0.0	0,0,0
1828	0.02	0.02	0.02	126,126,138	0.0	0.0	0.0	0,0,0
1829	0.01	0.02	0.02	130,121,139	0.0	0.0	0.0	0,0,0
1830	0.02	0.02	0.02	126,121,138	0.0	0.0	0.0	0,0,0
1831	0.01	0.02	0.02	130,121,139	0.0	0.0	0.0	0,0,0
1832	0.02	0.03	0.02	126,126,138	0.0	0.0	0.0	0,0,0
1833	0.01	0.02	0.02	124,126,139	0.0	0.0	0.0	0,0,0
1834	0.02	0.03	0.03	126,126,138	0.0	0.0	0.0	0,0,0
1835	0.01	0.02	0.02	123,126,139	0.0	0.0	0.0	0,0,0
1836	0.02	0.03	0.03	130,130,139	0.0	0.0	0.0	0,0,0
1837	0.01	0.02	0.02	123,123,139	0.0	0.0	0.0	0,0,0
1838	0.02	0.03	0.03	126,126,138	0.0	0.0	0.0	0,0,0
1839	0.01	0.02	0.02	130,123,139	0.0	0.0	0.0	0,0,0
1840	0.02	0.03	0.03	126,126,138	0.0	0.0	0.0	0,0,0
1841	0.01	0.02	0.02	130,124,139	0.0	0.0	0.0	0,0,0
1842	0.02	0.03	0.03	126,130,138	0.0	0.0	0.0	0,0,0
1843	0.01	0.02	0.02	130,130,139	0.0	0.0	0.0	0,0,0
1844	0.03	0.05	0.04	126,130,138	0.0	0.0	0.0	0,0,0
1845	0.03	0.04	0.04	130,130,139	0.0	0.0	0.0	0,0,0
1846	0.01	0.02	0.02	130,130,139	0.0	0.0	0.0	0,0,0
1847	0.02	0.03	0.03	130,130,139	0.0	0.0	0.0	0,0,0
1848	0.01	0.02	0.02	130,130,139	0.0	0.0	0.0	0,0,0
1849	0.02	0.03	0.03	130,126,139	0.0	0.0	0.0	0,0,0
1850	0.01	0.02	0.02	130,123,139	0.0	0.0	0.0	0,0,0
1851	0.02	0.03	0.02	130,126,139	0.0	0.0	0.0	0,0,0
1852	0.01	0.02	0.02	123,130,139	0.0	0.0	0.0	0,0,0
1853	0.02	0.03	0.02	130,130,139	0.0	0.0	0.0	0,0,0
1854	0.01	0.02	0.02	123,123,139	0.0	0.0	0.0	0,0,0
1855	0.02	0.03	0.02	126,126,138	0.0	0.0	0.0	0,0,0
1856	0.01	0.02	0.02	123,123,139	0.0	0.0	0.0	0,0,0
1857	0.02	0.02	0.02	130,130,139	0.0	0.0	0.0	0,0,0
1858	0.01	0.02	0.02	130,130,139	0.0	0.0	0.0	0,0,0
1859	0.01	0.02	0.02	130,130,139	0.0	0.0	0.0	0,0,0
1860	0.01	0.02	0.02	130,123,139	0.0	0.0	0.0	0,0,0
1861	0.01	0.02	0.02	130,126,139	0.0	0.0	0.0	0,0,0
1862	0.01	0.02	0.02	123,123,139	0.0	0.0	0.0	0,0,0
1863	0.01	0.02	0.02	123,130,139	0.0	0.0	0.0	0,0,0
1864	0.01	0.02	0.02	130,130,139	0.0	0.0	0.0	0,0,0
1865	0.01	0.02	0.02	123,123,139	0.0	0.0	0.0	0,0,0
1866	0.01	0.02	0.02	123,123,139	0.0	0.0	0.0	0,0,0
1867	0.01	0.02	0.02	123,123,139	0.0	0.0	0.0	0,0,0
1868	0.01	0.02	0.02	123,123,139	0.0	0.0	0.0	0,0,0
1869	0.01	0.02	0.02	130,130,139	0.0	0.0	0.0	0,0,0
1870	0.01	0.02	0.02	123,130,139	0.0	0.0	0.0	0,0,0
1871	0.01	0.02	0.02	123,123,139	0.0	0.0	0.0	0,0,0
1872	0.01	0.02	0.02	130,126,139	0.0	0.0	0.0	0,0,0
1873	0.01	0.02	0.02	130,123,139	0.0	0.0	0.0	0,0,0
1874	0.02	0.02	0.02	130,130,139	0.0	0.0	0.0	0,0,0
1875	0.01	0.02	0.02	130,130,139	0.0	0.0	0.0	0,0,0
1876	0.02	0.03	0.02	130,130,139	0.0	0.0	0.0	0,0,0
1877	0.01	0.02	0.02	123,123,139	0.0	0.0	0.0	0,0,0
1878	0.02	0.03	0.03	126,126,138	0.0	0.0	0.0	0,0,0
1879	0.01	0.02	0.02	123,123,139	0.0	0.0	0.0	0,0,0
1880	0.02	0.03	0.03	130,130,139	0.0	0.0	0.0	0,0,0
1881	0.01	0.02	0.02	123,130,139	0.0	0.0	0.0	0,0,0
1882	0.02	0.03	0.03	130,126,139	0.0	0.0	0.0	0,0,0
1883	0.01	0.02	0.02	130,123,139	0.0	0.0	0.0	0,0,0
1884	0.02	0.03	0.03	130,126,139	0.0	0.0	0.0	0,0,0
1885	0.01	0.02	0.02	130,130,139	0.0	0.0	0.0	0,0,0
1886	0.02	0.03	0.03	130,130,139	0.0	0.0	0.0	0,0,0
1887	0.01	0.02	0.02	130,130,139	0.0	0.0	0.0	0,0,0
1888	0.03	0.04	0.04	130,130,139	0.0	0.0	0.0	0,0,0
1889	0.02	0.04	0.03	130,130,139	0.0	0.0	0.0	0,0,0
1890	0.01	0.02	0.02	123,130,139	0.0	0.0	0.0	0,0,0
1891	0.02	0.03	0.03	130,130,139	0.0	0.0	0.0	0,0,0

1892	0.01	0.02	0.02	126,130,138	0.0	0.0	0.0	0,0,0
1893	0.02	0.03	0.02	130,130,139	0.0	0.0	0.0	0,0,0
1894	0.01	0.02	0.02	126,123,138	0.0	0.0	0.0	0,0,0
1895	0.02	0.03	0.02	130,130,139	0.0	0.0	0.0	0,0,0
1896	0.01	0.02	0.02	121,130,138	0.0	0.0	0.0	0,0,0
1897	0.02	0.02	0.02	130,130,139	0.0	0.0	0.0	0,0,0
1898	0.01	0.02	0.02	123,123,139	0.0	0.0	0.0	0,0,0
1899	0.02	0.02	0.02	126,126,138	0.0	0.0	0.0	0,0,0
1900	0.01	0.02	0.02	123,123,139	0.0	0.0	0.0	0,0,0
1901	0.02	0.02	0.02	130,130,139	0.0	0.0	0.0	0,0,0
1902	0.01	0.02	0.02	121,124,138	0.0	0.0	0.0	0,0,0
1903	0.01	0.02	0.02	130,130,139	0.0	0.0	0.0	0,0,0
1904	0.01	0.02	0.02	130,123,139	0.0	0.0	0.0	0,0,0
1905	0.01	0.02	0.02	130,124,139	0.0	0.0	0.0	0,0,0
1906	0.01	0.02	0.02	130,123,139	0.0	0.0	0.0	0,0,0
1907	0.01	0.02	0.02	121,124,138	0.0	0.0	0.0	0,0,0
1908	0.01	0.02	0.02	121,124,138	0.0	0.0	0.0	0,0,0
1909	0.01	0.02	0.02	123,123,139	0.0	0.0	0.0	0,0,0
1910	0.01	0.02	0.02	123,123,139	0.0	0.0	0.0	0,0,0
1911	0.01	0.02	0.02	123,123,139	0.0	0.0	0.0	0,0,0
1912	0.01	0.02	0.02	123,123,139	0.0	0.0	0.0	0,0,0
1913	0.01	0.02	0.02	121,123,138	0.0	0.0	0.0	0,0,0
1914	0.01	0.02	0.02	123,124,139	0.0	0.0	0.0	0,0,0
1915	0.01	0.02	0.02	130,123,139	0.0	0.0	0.0	0,0,0
1916	0.01	0.02	0.02	130,123,139	0.0	0.0	0.0	0,0,0
1917	0.01	0.02	0.02	130,123,139	0.0	0.0	0.0	0,0,0
1918	0.02	0.02	0.02	130,130,139	0.0	0.0	0.0	0,0,0
1919	0.01	0.02	0.02	121,124,138	0.0	0.0	0.0	0,0,0
1920	0.02	0.02	0.02	130,130,139	0.0	0.0	0.0	0,0,0
1921	0.01	0.02	0.02	123,123,139	0.0	0.0	0.0	0,0,0
1922	0.02	0.03	0.02	126,126,138	0.0	0.0	0.0	0,0,0
1923	0.01	0.02	0.02	123,123,139	0.0	0.0	0.0	0,0,0
1924	0.02	0.03	0.02	130,130,139	0.0	0.0	0.0	0,0,0
1925	0.01	0.02	0.02	121,130,138	0.0	0.0	0.0	0,0,0
1926	0.02	0.03	0.02	130,130,139	0.0	0.0	0.0	0,0,0
1927	0.01	0.02	0.02	126,123,138	0.0	0.0	0.0	0,0,0
1928	0.02	0.03	0.03	130,130,139	0.0	0.0	0.0	0,0,0
1929	0.01	0.02	0.02	126,130,138	0.0	0.0	0.0	0,0,0
1930	0.02	0.03	0.03	130,130,139	0.0	0.0	0.0	0,0,0
1931	0.01	0.02	0.02	130,130,139	0.0	0.0	0.0	0,0,0
1932	0.02	0.04	0.03	130,130,139	0.0	0.0	0.0	0,0,0
1933	0.02	0.03	0.02	130,130,139	0.0	0.0	0.0	0,0,0
1934	0.01	0.02	0.02	130,130,139	0.0	0.0	0.0	0,0,0
1935	0.01	0.02	0.02	130,130,139	0.0	0.0	0.0	0,0,0
1936	0.01	0.02	0.02	124,130,139	0.0	0.0	0.0	0,0,0
1937	0.01	0.02	0.02	130,130,139	0.0	0.0	0.0	0,0,0
1938	0.01	0.02	0.02	124,130,139	0.0	0.0	0.0	0,0,0
1939	0.01	0.02	0.02	130,130,139	0.0	0.0	0.0	0,0,0
1940	0.01	0.02	0.02	130,130,139	0.0	0.0	0.0	0,0,0
1941	0.01	0.02	0.02	130,130,139	0.0	0.0	0.0	0,0,0
1942	0.01	0.02	0.02	123,130,139	0.0	0.0	0.0	0,0,0
1943	0.01	0.02	0.02	130,130,139	0.0	0.0	0.0	0,0,0
1944	0.01	0.02	0.02	123,123,139	0.0	0.0	0.0	0,0,0
1945	0.01	0.02	0.02	130,130,139	0.0	0.0	0.0	0,0,0
1946	0.01	0.01	0.02	123,130,139	0.0	0.0	0.0	0,0,0
1947	0.01	0.02	0.02	130,130,139	0.0	0.0	0.0	0,0,0
1948	0.01	0.02	0.02	123,123,139	0.0	0.0	0.0	0,0,0
1949	0.01	0.01	0.02	123,123,139	0.0	0.0	0.0	0,0,0
1950	0.01	0.02	0.02	124,130,139	0.0	0.0	0.0	0,0,0
1951	0.01	0.01	0.02	123,123,139	0.0	0.0	0.0	0,0,0
1952	0.01	0.02	0.02	130,130,139	0.0	0.0	0.0	0,0,0
1953	0.01	0.02	0.02	123,123,139	0.0	0.0	0.0	0,0,0
1954	0.01	0.02	0.02	124,124,139	0.0	0.0	0.0	0,0,0
1955	0.01	0.02	0.02	123,124,139	0.0	0.0	0.0	0,0,0
1956	0.01	0.02	0.02	123,123,139	0.0	0.0	0.0	0,0,0
1957	0.01	0.02	0.02	130,130,139	0.0	0.0	0.0	0,0,0
1958	0.01	0.01	0.02	123,123,139	0.0	0.0	0.0	0,0,0
1959	0.01	0.02	0.02	123,130,139	0.0	0.0	0.0	0,0,0
1960	0.01	0.02	0.02	123,123,139	0.0	0.0	0.0	0,0,0
1961	0.01	0.01	0.02	123,123,139	0.0	0.0	0.0	0,0,0
1962	0.01	0.02	0.02	130,130,139	0.0	0.0	0.0	0,0,0
1963	0.01	0.01	0.02	123,130,139	0.0	0.0	0.0	0,0,0
1964	0.01	0.02	0.02	130,130,139	0.0	0.0	0.0	0,0,0
1965	0.01	0.02	0.02	123,123,139	0.0	0.0	0.0	0,0,0
1966	0.01	0.02	0.02	130,130,139	0.0	0.0	0.0	0,0,0
1967	0.01	0.02	0.02	123,130,139	0.0	0.0	0.0	0,0,0
1968	0.01	0.02	0.02	130,130,139	0.0	0.0	0.0	0,0,0
1969	0.01	0.02	0.02	124,130,139	0.0	0.0	0.0	0,0,0

1970	0.01	0.02	0.02	130,130,139	0.0	0.0	0.0	0,0,0
1971	0.01	0.02	0.02	124,130,139	0.0	0.0	0.0	0,0,0
1972	0.01	0.02	0.02	130,130,139	0.0	0.0	0.0	0,0,0
1973	0.01	0.02	0.02	124,130,139	0.0	0.0	0.0	0,0,0
1974	0.02	0.02	0.02	130,130,139	0.0	0.0	0.0	0,0,0
1975	0.01	0.02	0.02	130,130,139	0.0	0.0	0.0	0,0,0
1976	0.02	0.03	0.02	130,130,139	0.0	0.0	0.0	0,0,0
2469	0.04	0.07	0.05	126,130,138	0.0	0.0	0.0	0,0,0
2470	0.01	0.02	0.02	121,126,138	0.0	0.0	0.0	0,0,0
2471	0.03	0.04	0.04	126,126,138	0.0	0.0	0.0	0,0,0
2472	0.01	0.02	0.02	126,121,138	0.0	0.0	0.0	0,0,0
2473	0.03	0.04	0.03	130,121,139	0.0	0.0	0.0	0,0,0
2474	0.01	0.02	0.02	121,121,138	0.0	0.0	0.0	0,0,0
2475	0.02	0.03	0.03	123,121,139	0.0	0.0	0.0	0,0,0
2476	0.01	0.02	0.02	126,121,138	0.0	0.0	0.0	0,0,0
2477	0.02	0.04	0.03	130,130,139	0.0	0.0	0.0	0,0,0
2478	0.01	0.02	0.02	123,121,139	0.0	0.0	0.0	0,0,0
2479	0.03	0.04	0.03	126,126,138	0.0	0.0	0.0	0,0,0
2480	0.01	0.02	0.02	123,126,139	0.0	0.0	0.0	0,0,0
2481	0.02	0.04	0.03	130,126,139	0.0	0.0	0.0	0,0,0
2482	0.01	0.02	0.02	126,121,138	0.0	0.0	0.0	0,0,0
2483	0.02	0.03	0.03	130,121,139	0.0	0.0	0.0	0,0,0
2484	0.01	0.02	0.02	130,121,139	0.0	0.0	0.0	0,0,0
2485	0.02	0.02	0.02	123,121,139	0.0	0.0	0.0	0,0,0
2486	0.01	0.02	0.02	130,121,139	0.0	0.0	0.0	0,0,0
2487	0.01	0.02	0.02	126,121,138	0.0	0.0	0.0	0,0,0
2488	0.02	0.03	0.02	130,126,139	0.0	0.0	0.0	0,0,0
2489	0.01	0.02	0.02	123,123,139	0.0	0.0	0.0	0,0,0
2490	0.02	0.03	0.02	126,126,138	0.0	0.0	0.0	0,0,0
2491	0.02	0.03	0.02	126,126,138	0.0	0.0	0.0	0,0,0
2492	0.02	0.03	0.02	123,124,139	0.0	0.0	0.0	0,0,0
2493	0.01	0.03	0.02	126,126,138	0.0	0.0	0.0	0,0,0
2494	0.02	0.02	0.02	123,121,139	0.0	0.0	0.0	0,0,0
2495	0.01	0.02	0.02	130,121,139	0.0	0.0	0.0	0,0,0
2496	0.02	0.03	0.02	123,121,139	0.0	0.0	0.0	0,0,0
2497	0.01	0.02	0.02	130,121,139	0.0	0.0	0.0	0,0,0
2498	0.02	0.03	0.03	130,121,139	0.0	0.0	0.0	0,0,0
2499	0.01	0.02	0.02	126,121,138	0.0	0.0	0.0	0,0,0
2500	0.03	0.04	0.03	130,126,139	0.0	0.0	0.0	0,0,0
2501	0.01	0.02	0.02	123,126,139	0.0	0.0	0.0	0,0,0
2502	0.03	0.05	0.04	126,126,138	0.0	0.0	0.0	0,0,0
2503	0.01	0.02	0.02	123,121,139	0.0	0.0	0.0	0,0,0
2504	0.02	0.04	0.03	130,130,139	0.0	0.0	0.0	0,0,0
2505	0.01	0.02	0.02	126,121,138	0.0	0.0	0.0	0,0,0
2506	0.03	0.04	0.03	123,121,139	0.0	0.0	0.0	0,0,0
2507	0.01	0.02	0.02	121,121,138	0.0	0.0	0.0	0,0,0
2508	0.03	0.04	0.04	130,121,139	0.0	0.0	0.0	0,0,0
2509	0.01	0.02	0.02	126,121,138	0.0	0.0	0.0	0,0,0
2510	0.03	0.04	0.04	126,126,138	0.0	0.0	0.0	0,0,0
2511	0.01	0.02	0.02	121,126,138	0.0	0.0	0.0	0,0,0
2512	0.05	0.07	0.06	126,130,138	0.0	0.0	0.0	0,0,0
2513	0.03	0.05	0.04	126,126,138	0.0	0.0	0.0	0,0,0
2514	0.01	0.02	0.02	130,130,139	0.0	0.0	0.0	0,0,0
2515	0.02	0.03	0.03	126,126,138	0.0	0.0	0.0	0,0,0
2516	0.01	0.02	0.02	126,126,138	0.0	0.0	0.0	0,0,0
2517	0.02	0.03	0.03	126,126,138	0.0	0.0	0.0	0,0,0
2518	0.01	0.02	0.02	126,121,138	0.0	0.0	0.0	0,0,0
2519	0.02	0.03	0.02	130,121,139	0.0	0.0	0.0	0,0,0
2520	0.01	0.02	0.02	121,121,138	0.0	0.0	0.0	0,0,0
2521	0.02	0.03	0.02	130,123,139	0.0	0.0	0.0	0,0,0
2522	0.01	0.02	0.02	123,121,139	0.0	0.0	0.0	0,0,0
2523	0.02	0.03	0.03	126,126,138	0.0	0.0	0.0	0,0,0
2524	0.01	0.02	0.02	123,121,139	0.0	0.0	0.0	0,0,0
2525	0.02	0.02	0.02	126,126,138	0.0	0.0	0.0	0,0,0
2526	0.01	0.02	0.02	126,121,138	0.0	0.0	0.0	0,0,0
2527	0.01	0.02	0.02	130,121,139	0.0	0.0	0.0	0,0,0
2528	0.01	0.01	0.02	121,121,138	0.0	0.0	0.0	0,0,0
2529	0.01	0.02	0.02	130,121,139	0.0	0.0	0.0	0,0,0
2530	0.01	0.01	0.02	121,121,138	0.0	0.0	0.0	0,0,0
2531	0.01	0.02	0.02	123,121,139	0.0	0.0	0.0	0,0,0
2532	0.01	0.02	0.02	121,121,138	0.0	0.0	0.0	0,0,0
2533	0.01	0.02	0.02	123,121,139	0.0	0.0	0.0	0,0,0
2534	0.01	0.02	0.02	126,126,138	0.0	0.0	0.0	0,0,0
2535	0.01	0.02	0.02	123,121,139	0.0	0.0	0.0	0,0,0
2536	0.01	0.02	0.02	123,121,139	0.0	0.0	0.0	0,0,0
2537	0.01	0.02	0.02	121,121,138	0.0	0.0	0.0	0,0,0
2538	0.01	0.02	0.02	123,121,139	0.0	0.0	0.0	0,0,0
2539	0.01	0.02	0.02	121,121,138	0.0	0.0	0.0	0,0,0

2540	0.01	0.02	0.02	130,121,139	0.0	0.0	0.0	0,0,0
2541	0.01	0.02	0.02	126,121,138	0.0	0.0	0.0	0,0,0
2542	0.02	0.02	0.02	126,121,138	0.0	0.0	0.0	0,0,0
2543	0.01	0.02	0.02	126,121,138	0.0	0.0	0.0	0,0,0
2544	0.02	0.03	0.03	126,126,138	0.0	0.0	0.0	0,0,0
2545	0.01	0.02	0.02	123,121,139	0.0	0.0	0.0	0,0,0
2546	0.02	0.03	0.03	126,126,138	0.0	0.0	0.0	0,0,0
2547	0.01	0.02	0.02	123,121,139	0.0	0.0	0.0	0,0,0
2548	0.02	0.03	0.03	130,123,139	0.0	0.0	0.0	0,0,0
2549	0.01	0.02	0.02	121,121,138	0.0	0.0	0.0	0,0,0
2550	0.02	0.03	0.03	123,126,139	0.0	0.0	0.0	0,0,0
2551	0.01	0.02	0.02	126,121,138	0.0	0.0	0.0	0,0,0
2552	0.02	0.03	0.03	126,121,138	0.0	0.0	0.0	0,0,0
2553	0.01	0.02	0.02	126,126,138	0.0	0.0	0.0	0,0,0
2554	0.02	0.03	0.03	126,126,138	0.0	0.0	0.0	0,0,0
2555	0.01	0.02	0.02	130,130,139	0.0	0.0	0.0	0,0,0
2556	0.03	0.05	0.04	126,126,138	0.0	0.0	0.0	0,0,0
2557	0.03	0.04	0.03	126,130,138	0.0	0.0	0.0	0,0,0
2558	0.01	0.02	0.02	126,130,138	0.0	0.0	0.0	0,0,0
2559	0.02	0.03	0.03	130,126,139	0.0	0.0	0.0	0,0,0
2560	0.01	0.02	0.02	126,130,138	0.0	0.0	0.0	0,0,0
2561	0.02	0.03	0.03	130,126,139	0.0	0.0	0.0	0,0,0
2562	0.01	0.02	0.02	121,121,138	0.0	0.0	0.0	0,0,0
2563	0.02	0.02	0.02	130,126,139	0.0	0.0	0.0	0,0,0
2564	0.01	0.01	0.02	121,121,138	0.0	0.0	0.0	0,0,0
2565	0.02	0.02	0.02	130,123,139	0.0	0.0	0.0	0,0,0
2566	0.01	0.02	0.02	123,121,139	0.0	0.0	0.0	0,0,0
2567	0.02	0.02	0.02	126,126,138	0.0	0.0	0.0	0,0,0
2568	0.01	0.01	0.02	121,121,138	0.0	0.0	0.0	0,0,0
2569	0.02	0.02	0.02	130,126,139	0.0	0.0	0.0	0,0,0
2570	0.01	0.01	0.02	121,121,138	0.0	0.0	0.0	0,0,0
2571	0.01	0.02	0.02	130,121,139	0.0	0.0	0.0	0,0,0
2572	0.01	0.01	0.02	121,121,138	0.0	0.0	0.0	0,0,0
2573	0.01	0.01	0.02	130,121,139	0.0	0.0	0.0	0,0,0
2574	0.01	0.01	0.02	121,121,138	0.0	0.0	0.0	0,0,0
2575	0.01	0.01	0.02	123,121,139	0.0	0.0	0.0	0,0,0
2576	0.01	0.01	0.02	121,121,138	0.0	0.0	0.0	0,0,0
2577	0.01	0.01	0.02	123,121,139	0.0	0.0	0.0	0,0,0
2578	0.01	0.01	0.02	126,121,138	0.0	0.0	0.0	0,0,0
2579	0.01	0.01	0.02	123,121,139	0.0	0.0	0.0	0,0,0
2580	0.01	0.01	0.02	123,123,139	0.0	0.0	0.0	0,0,0
2581	0.01	0.01	0.02	121,121,138	0.0	0.0	0.0	0,0,0
2582	0.01	0.02	0.02	123,121,139	0.0	0.0	0.0	0,0,0
2583	0.01	0.01	0.02	121,121,138	0.0	0.0	0.0	0,0,0
2584	0.01	0.02	0.02	130,121,139	0.0	0.0	0.0	0,0,0
2585	0.01	0.01	0.02	121,121,138	0.0	0.0	0.0	0,0,0
2586	0.02	0.02	0.02	130,121,139	0.0	0.0	0.0	0,0,0
2587	0.01	0.01	0.02	121,121,138	0.0	0.0	0.0	0,0,0
2588	0.02	0.02	0.02	130,126,139	0.0	0.0	0.0	0,0,0
2589	0.01	0.02	0.02	121,121,138	0.0	0.0	0.0	0,0,0
2590	0.02	0.02	0.03	126,126,138	0.0	0.0	0.0	0,0,0
2591	0.01	0.02	0.02	123,121,139	0.0	0.0	0.0	0,0,0
2592	0.02	0.03	0.03	130,123,139	0.0	0.0	0.0	0,0,0
2593	0.01	0.02	0.02	121,121,138	0.0	0.0	0.0	0,0,0
2594	0.02	0.03	0.03	130,126,139	0.0	0.0	0.0	0,0,0
2595	0.01	0.02	0.02	121,121,138	0.0	0.0	0.0	0,0,0
2596	0.02	0.03	0.03	130,126,139	0.0	0.0	0.0	0,0,0
2597	0.01	0.02	0.02	126,130,138	0.0	0.0	0.0	0,0,0
2598	0.02	0.03	0.03	130,126,139	0.0	0.0	0.0	0,0,0
2599	0.01	0.02	0.02	126,130,138	0.0	0.0	0.0	0,0,0
2600	0.03	0.04	0.04	126,130,138	0.0	0.0	0.0	0,0,0
2601	0.02	0.03	0.03	126,130,138	0.0	0.0	0.0	0,0,0
2602	0.01	0.02	0.02	121,130,138	0.0	0.0	0.0	0,0,0
2603	0.02	0.03	0.03	130,126,139	0.0	0.0	0.0	0,0,0
2604	0.01	0.02	0.02	126,130,138	0.0	0.0	0.0	0,0,0
2605	0.02	0.02	0.02	130,126,139	0.0	0.0	0.0	0,0,0
2606	0.01	0.02	0.02	121,121,138	0.0	0.0	0.0	0,0,0
2607	0.02	0.02	0.02	130,121,139	0.0	0.0	0.0	0,0,0
2608	0.01	0.01	0.02	121,121,138	0.0	0.0	0.0	0,0,0
2609	0.02	0.02	0.02	130,123,139	0.0	0.0	0.0	0,0,0
2610	0.01	0.01	0.02	121,121,138	0.0	0.0	0.0	0,0,0
2611	0.02	0.02	0.02	126,121,138	0.0	0.0	0.0	0,0,0
2612	0.01	0.01	0.02	121,121,138	0.0	0.0	0.0	0,0,0
2613	0.01	0.02	0.02	130,121,139	0.0	0.0	0.0	0,0,0
2614	0.01	0.01	0.02	121,121,138	0.0	0.0	0.0	0,0,0
2615	0.01	0.01	0.02	130,121,139	0.0	0.0	0.0	0,0,0
2616	0.01	0.01	0.02	121,121,138	0.0	0.0	0.0	0,0,0
2617	0.01	0.01	0.02	121,121,138	0.0	0.0	0.0	0,0,0

2618	0.01	0.01	0.02	121,121,138	0.0	0.0	0.0	0,0,0
2619	0.01	0.01	0.02	123,121,139	0.0	0.0	0.0	0,0,0
2620	0.01	0.01	0.02	121,121,138	0.0	0.0	0.0	0,0,0
2621	0.01	0.01	0.02	121,121,138	0.0	0.0	0.0	0,0,0
2622	0.01	0.01	0.02	121,121,138	0.0	0.0	0.0	0,0,0
2623	0.01	0.01	0.02	121,121,138	0.0	0.0	0.0	0,0,0
2624	0.01	0.01	0.02	121,121,138	0.0	0.0	0.0	0,0,0
2625	0.01	0.01	0.02	121,121,138	0.0	0.0	0.0	0,0,0
2626	0.01	0.01	0.02	123,121,139	0.0	0.0	0.0	0,0,0
2627	0.01	0.01	0.02	121,121,138	0.0	0.0	0.0	0,0,0
2628	0.01	0.01	0.02	121,121,138	0.0	0.0	0.0	0,0,0
2629	0.01	0.01	0.02	121,121,138	0.0	0.0	0.0	0,0,0
2630	0.01	0.01	0.02	130,121,139	0.0	0.0	0.0	0,0,0
2631	0.01	0.01	0.02	121,121,138	0.0	0.0	0.0	0,0,0
2632	0.02	0.02	0.02	130,126,139	0.0	0.0	0.0	0,0,0
2633	0.01	0.01	0.02	121,121,138	0.0	0.0	0.0	0,0,0
2634	0.02	0.02	0.02	126,121,138	0.0	0.0	0.0	0,0,0
2635	0.01	0.01	0.02	121,121,138	0.0	0.0	0.0	0,0,0
2636	0.02	0.02	0.02	130,123,139	0.0	0.0	0.0	0,0,0
2637	0.01	0.01	0.02	121,121,138	0.0	0.0	0.0	0,0,0
2638	0.02	0.02	0.02	130,121,139	0.0	0.0	0.0	0,0,0
2639	0.01	0.02	0.02	121,121,138	0.0	0.0	0.0	0,0,0
2640	0.02	0.03	0.02	130,126,139	0.0	0.0	0.0	0,0,0
2641	0.01	0.02	0.02	126,130,138	0.0	0.0	0.0	0,0,0
2642	0.02	0.03	0.03	130,126,139	0.0	0.0	0.0	0,0,0
2643	0.01	0.02	0.02	121,130,138	0.0	0.0	0.0	0,0,0
2644	0.02	0.03	0.03	126,130,138	0.0	0.0	0.0	0,0,0
2645	0.02	0.03	0.02	130,130,139	0.0	0.0	0.0	0,0,0
2646	0.01	0.02	0.02	130,130,139	0.0	0.0	0.0	0,0,0
2647	0.01	0.02	0.02	130,126,139	0.0	0.0	0.0	0,0,0
2648	0.01	0.02	0.02	130,130,139	0.0	0.0	0.0	0,0,0
2649	0.01	0.02	0.02	130,126,139	0.0	0.0	0.0	0,0,0
2650	0.01	0.01	0.02	130,126,139	0.0	0.0	0.0	0,0,0
2651	0.01	0.01	0.02	130,123,139	0.0	0.0	0.0	0,0,0
2652	0.01	0.01	0.02	130,123,139	0.0	0.0	0.0	0,0,0
2653	0.01	0.01	0.02	123,123,139	0.0	0.0	0.0	0,0,0
2654	0.01	0.01	0.02	123,123,139	0.0	0.0	0.0	0,0,0
2655	0.01	0.02	0.02	126,130,138	0.0	0.0	0.0	0,0,0
2656	0.01	0.01	0.02	123,123,139	0.0	0.0	0.0	0,0,0
2657	0.01	0.01	0.02	130,130,139	0.0	0.0	0.0	0,0,0
2658	0.01	0.01	0.01	123,123,139	0.0	0.0	0.0	0,0,0
2659	0.01	0.01	0.02	123,123,139	0.0	0.0	0.0	0,0,0
2660	0.01	0.01	0.01	123,123,139	0.0	0.0	0.0	0,0,0
2661	0.01	0.01	0.01	123,123,139	0.0	0.0	0.0	0,0,0
2662	0.01	0.01	0.01	123,123,139	0.0	0.0	0.0	0,0,0
2663	0.01	0.01	0.01	123,123,139	0.0	0.0	0.0	0,0,0
2664	0.01	0.01	0.01	130,123,139	0.0	0.0	0.0	0,0,0
2665	0.01	0.01	0.01	123,123,139	0.0	0.0	0.0	0,0,0
2666	0.01	0.01	0.02	121,123,138	0.0	0.0	0.0	0,0,0
2667	0.01	0.01	0.02	121,123,138	0.0	0.0	0.0	0,0,0
2668	0.01	0.01	0.02	123,123,139	0.0	0.0	0.0	0,0,0
2669	0.01	0.01	0.01	123,123,139	0.0	0.0	0.0	0,0,0
2670	0.01	0.01	0.01	123,123,139	0.0	0.0	0.0	0,0,0
2671	0.01	0.01	0.01	123,123,139	0.0	0.0	0.0	0,0,0
2672	0.01	0.01	0.01	123,123,139	0.0	0.0	0.0	0,0,0
2673	0.01	0.01	0.01	123,123,139	0.0	0.0	0.0	0,0,0
2674	0.01	0.01	0.02	123,123,139	0.0	0.0	0.0	0,0,0
2675	0.01	0.01	0.01	123,123,139	0.0	0.0	0.0	0,0,0
2676	0.01	0.01	0.02	130,130,139	0.0	0.0	0.0	0,0,0
2677	0.01	0.01	0.01	123,123,139	0.0	0.0	0.0	0,0,0
2678	0.01	0.02	0.02	126,130,138	0.0	0.0	0.0	0,0,0
2679	0.01	0.01	0.02	123,123,139	0.0	0.0	0.0	0,0,0
2680	0.01	0.01	0.02	130,123,139	0.0	0.0	0.0	0,0,0
2681	0.01	0.01	0.02	130,123,139	0.0	0.0	0.0	0,0,0
2682	0.01	0.01	0.02	130,130,139	0.0	0.0	0.0	0,0,0
2683	0.01	0.01	0.02	130,126,139	0.0	0.0	0.0	0,0,0
2684	0.01	0.02	0.02	130,126,139	0.0	0.0	0.0	0,0,0
2685	0.01	0.02	0.02	130,130,139	0.0	0.0	0.0	0,0,0
2686	0.01	0.02	0.02	130,126,139	0.0	0.0	0.0	0,0,0
2687	0.01	0.02	0.02	130,130,139	0.0	0.0	0.0	0,0,0
2688	0.02	0.03	0.02	130,130,139	0.0	0.0	0.0	0,0,0
3017	0.11	0.19	0.13	126,126,138	0.0	0.0	0.0	0,0,0
3018	0.12	0.24	0.12	126,126,138	0.0	0.0	0.0	0,0,0
3019	0.08	0.16	0.10	126,126,138	0.0	0.0	0.0	0,0,0
3020	0.09	0.17	0.10	126,126,138	0.0	0.0	0.0	0,0,0
3021	0.09	0.18	0.11	126,126,138	0.0	0.0	0.0	0,0,0
3022	0.09	0.18	0.11	126,126,138	0.0	0.0	0.0	0,0,0
3023	0.09	0.17	0.10	126,126,138	0.0	0.0	0.0	0,0,0

3024	0.08	0.15	0.09	126,126,138	0.0	0.0	0.0	0,0,0
3025	0.07	0.12	0.08	126,126,138	0.0	0.0	0.0	0,0,0
3026	0.11	0.20	0.13	126,126,138	0.0	0.0	0.0	0,0,0
3027	0.33	0.55	0.39	126,126,138	0.10	0.12	0.12	126,136,138
3028	0.24	0.40	0.28	126,126,138	0.0	0.0	0.0	0,0,0
3029	0.10	0.18	0.11	126,126,138	0.0	0.0	0.0	0,0,0
3030	0.08	0.14	0.09	126,126,138	0.0	0.0	0.0	0,0,0
3031	0.08	0.15	0.10	126,126,138	0.0	0.0	0.0	0,0,0
3032	0.09	0.17	0.10	126,126,138	0.0	0.0	0.0	0,0,0
3033	0.09	0.18	0.11	126,126,138	0.0	0.0	0.0	0,0,0
3034	0.09	0.18	0.11	126,126,138	0.0	0.0	0.0	0,0,0
3035	0.09	0.17	0.10	126,126,138	0.0	0.0	0.0	0,0,0
3036	0.08	0.15	0.10	126,126,138	0.0	0.0	0.0	0,0,0
3037	0.07	0.13	0.08	126,126,138	0.0	0.0	0.0	0,0,0
3038	0.12	0.22	0.14	126,126,138	0.0	0.0	0.0	0,0,0
3039	0.34	0.56	0.40	126,126,138	0.10	0.13	0.12	126,136,138
3040	0.26	0.45	0.30	126,126,138	0.0	0.0	0.0	0,0,0
3041	0.11	0.20	0.12	126,126,138	0.0	0.0	0.0	0,0,0
3042	0.07	0.14	0.09	126,126,138	0.0	0.0	0.0	0,0,0
3043	0.08	0.16	0.10	126,126,138	0.0	0.0	0.0	0,0,0
3044	0.09	0.18	0.10	126,126,138	0.0	0.0	0.0	0,0,0
3045	0.09	0.19	0.11	126,126,138	0.0	0.0	0.0	0,0,0
3046	0.09	0.19	0.11	126,126,138	0.0	0.0	0.0	0,0,0
3047	0.09	0.18	0.10	126,126,138	0.0	0.0	0.0	0,0,0
3048	0.08	0.16	0.10	126,126,138	0.0	0.0	0.0	0,0,0
3049	0.08	0.15	0.09	126,126,138	0.0	0.0	0.0	0,0,0
3050	0.10	0.19	0.12	126,126,138	0.0	0.0	0.0	0,0,0
3051	0.25	0.43	0.29	126,126,138	0.0	0.0	0.0	0,0,0
3052	0.32	0.53	0.38	126,126,138	0.10	0.11	0.10	126,136,138
3053	0.11	0.20	0.13	126,126,138	0.0	0.0	0.0	0,0,0
3054	0.07	0.12	0.08	126,126,138	0.0	0.0	0.0	0,0,0
3055	0.08	0.15	0.09	126,126,138	0.0	0.0	0.0	0,0,0
3056	0.09	0.17	0.10	126,126,138	0.0	0.0	0.0	0,0,0
3057	0.09	0.18	0.11	126,126,138	0.0	0.0	0.0	0,0,0
3058	0.09	0.18	0.11	126,126,138	0.0	0.0	0.0	0,0,0
3059	0.09	0.17	0.10	126,126,138	0.0	0.0	0.0	0,0,0
3060	0.08	0.16	0.09	126,126,138	0.0	0.0	0.0	0,0,0
3061	0.12	0.24	0.13	126,126,138	0.0	0.0	0.0	0,0,0
3062	0.11	0.19	0.13	126,126,138	0.0	0.0	0.0	0,0,0
3063	0.08	0.11	0.10	126,126,138	0.0	0.0	0.0	0,0,0
3064	0.11	0.20	0.12	126,126,138	0.0	0.0	0.0	0,0,0
3065	0.08	0.15	0.09	126,126,138	0.0	0.0	0.0	0,0,0
3066	0.08	0.16	0.10	126,126,138	0.0	0.0	0.0	0,0,0
3067	0.08	0.16	0.10	126,126,138	0.0	0.0	0.0	0,0,0
3068	0.08	0.16	0.10	126,126,138	0.0	0.0	0.0	0,0,0
3069	0.08	0.16	0.10	126,126,138	0.0	0.0	0.0	0,0,0
3070	0.07	0.14	0.09	126,126,138	0.0	0.0	0.0	0,0,0
3071	0.06	0.12	0.07	126,126,138	0.0	0.0	0.0	0,0,0
3072	0.10	0.19	0.12	126,126,138	0.0	0.0	0.0	0,0,0
3073	0.33	0.56	0.40	126,126,138	0.10	0.13	0.12	126,136,138
3074	0.24	0.41	0.28	126,126,138	0.0	0.0	0.0	0,0,0
3075	0.10	0.17	0.11	126,126,138	0.0	0.0	0.0	0,0,0
3076	0.07	0.13	0.08	126,126,138	0.0	0.0	0.0	0,0,0
3077	0.08	0.15	0.09	126,126,138	0.0	0.0	0.0	0,0,0
3078	0.08	0.16	0.10	126,126,138	0.0	0.0	0.0	0,0,0
3079	0.08	0.16	0.10	126,126,138	0.0	0.0	0.0	0,0,0
3080	0.08	0.16	0.10	126,126,138	0.0	0.0	0.0	0,0,0
3081	0.08	0.15	0.10	126,126,138	0.0	0.0	0.0	0,0,0
3082	0.08	0.14	0.09	126,126,138	0.0	0.0	0.0	0,0,0
3083	0.06	0.12	0.08	126,126,138	0.0	0.0	0.0	0,0,0
3084	0.12	0.20	0.14	126,126,138	0.0	0.0	0.0	0,0,0
3085	0.34	0.57	0.41	126,126,138	0.10	0.13	0.13	126,136,138
3086	0.26	0.45	0.30	126,126,138	0.0	0.0	0.0	0,0,0
3087	0.10	0.19	0.12	126,126,138	0.0	0.0	0.0	0,0,0
3088	0.07	0.13	0.08	126,126,138	0.0	0.0	0.0	0,0,0
3089	0.08	0.15	0.09	126,126,138	0.0	0.0	0.0	0,0,0
3090	0.08	0.16	0.10	126,126,138	0.0	0.0	0.0	0,0,0
3091	0.08	0.17	0.10	126,126,138	0.0	0.0	0.0	0,0,0
3092	0.08	0.17	0.10	126,126,138	0.0	0.0	0.0	0,0,0
3093	0.08	0.17	0.10	126,126,138	0.0	0.0	0.0	0,0,0
3094	0.08	0.16	0.09	126,126,138	0.0	0.0	0.0	0,0,0
3095	0.07	0.14	0.08	126,126,138	0.0	0.0	0.0	0,0,0
3096	0.10	0.18	0.12	126,126,138	0.0	0.0	0.0	0,0,0
3097	0.25	0.44	0.29	126,126,138	0.0	0.0	0.0	0,0,0
3098	0.32	0.53	0.38	126,126,138	0.10	0.11	0.10	126,136,138
3099	0.10	0.18	0.12	126,126,138	0.0	0.0	0.0	0,0,0
3100	0.06	0.11	0.07	126,126,138	0.0	0.0	0.0	0,0,0
3101	0.07	0.14	0.09	126,126,138	0.0	0.0	0.0	0,0,0

3102	0.08	0.15	0.10	126,126,138	0.0	0.0	0.0	0,0,0
3103	0.08	0.16	0.10	126,126,138	0.0	0.0	0.0	0,0,0
3104	0.08	0.16	0.10	126,126,138	0.0	0.0	0.0	0,0,0
3105	0.08	0.16	0.10	126,126,138	0.0	0.0	0.0	0,0,0
3106	0.08	0.15	0.09	126,126,138	0.0	0.0	0.0	0,0,0
3107	0.11	0.20	0.12	126,126,138	0.0	0.0	0.0	0,0,0
3108	0.08	0.11	0.10	126,126,138	0.0	0.0	0.0	0,0,0
3109	0.07	0.10	0.08	126,126,138	0.0	0.0	0.0	0,0,0
3110	0.07	0.12	0.08	126,126,138	0.0	0.0	0.0	0,0,0
3111	0.08	0.13	0.09	126,126,138	0.0	0.0	0.0	0,0,0
3112	0.07	0.13	0.09	126,126,138	0.0	0.0	0.0	0,0,0
3113	0.07	0.13	0.09	126,126,138	0.0	0.0	0.0	0,0,0
3114	0.07	0.12	0.08	126,126,138	0.0	0.0	0.0	0,0,0
3115	0.06	0.12	0.08	126,126,138	0.0	0.0	0.0	0,0,0
3116	0.07	0.12	0.08	126,126,138	0.0	0.0	0.0	0,0,0
3117	0.06	0.11	0.07	126,126,138	0.0	0.0	0.0	0,0,0
3118	0.08	0.15	0.09	126,126,138	0.0	0.0	0.0	0,0,0
3119	0.12	0.21	0.14	126,126,138	0.0	0.0	0.0	0,0,0
3120	0.11	0.19	0.13	126,126,138	0.0	0.0	0.0	0,0,0
3121	0.08	0.14	0.09	126,126,138	0.0	0.0	0.0	0,0,0
3122	0.07	0.12	0.08	126,126,138	0.0	0.0	0.0	0,0,0
3123	0.07	0.12	0.08	126,126,138	0.0	0.0	0.0	0,0,0
3124	0.07	0.12	0.08	126,126,138	0.0	0.0	0.0	0,0,0
3125	0.07	0.12	0.08	126,126,138	0.0	0.0	0.0	0,0,0
3126	0.07	0.12	0.08	126,126,138	0.0	0.0	0.0	0,0,0
3127	0.07	0.12	0.08	126,126,138	0.0	0.0	0.0	0,0,0
3128	0.07	0.12	0.08	126,126,138	0.0	0.0	0.0	0,0,0
3129	0.07	0.11	0.08	126,126,138	0.0	0.0	0.0	0,0,0
3130	0.09	0.16	0.11	126,126,138	0.0	0.0	0.0	0,0,0
3131	0.13	0.22	0.15	126,126,138	0.0	0.0	0.0	0,0,0
3132	0.12	0.21	0.14	126,126,138	0.0	0.0	0.0	0,0,0
3133	0.08	0.16	0.10	126,126,138	0.0	0.0	0.0	0,0,0
3134	0.07	0.12	0.08	126,126,138	0.0	0.0	0.0	0,0,0
3135	0.07	0.13	0.08	126,126,138	0.0	0.0	0.0	0,0,0
3136	0.07	0.13	0.08	126,126,138	0.0	0.0	0.0	0,0,0
3137	0.07	0.13	0.08	126,126,138	0.0	0.0	0.0	0,0,0
3138	0.07	0.13	0.08	126,126,138	0.0	0.0	0.0	0,0,0
3139	0.07	0.13	0.08	126,126,138	0.0	0.0	0.0	0,0,0
3140	0.07	0.13	0.08	126,126,138	0.0	0.0	0.0	0,0,0
3141	0.07	0.12	0.08	126,126,138	0.0	0.0	0.0	0,0,0
3142	0.08	0.15	0.09	126,126,138	0.0	0.0	0.0	0,0,0
3143	0.11	0.20	0.13	126,126,138	0.0	0.0	0.0	0,0,0
3144	0.12	0.20	0.14	126,126,138	0.0	0.0	0.0	0,0,0
3145	0.08	0.15	0.09	126,126,138	0.0	0.0	0.0	0,0,0
3146	0.06	0.11	0.07	126,126,138	0.0	0.0	0.0	0,0,0
3147	0.07	0.12	0.08	126,126,138	0.0	0.0	0.0	0,0,0
3148	0.06	0.12	0.08	126,126,138	0.0	0.0	0.0	0,0,0
3149	0.07	0.12	0.08	126,126,138	0.0	0.0	0.0	0,0,0
3150	0.07	0.13	0.09	126,126,138	0.0	0.0	0.0	0,0,0
3151	0.07	0.13	0.09	126,126,138	0.0	0.0	0.0	0,0,0
3152	0.08	0.13	0.09	126,126,138	0.0	0.0	0.0	0,0,0
3153	0.07	0.12	0.08	126,126,138	0.0	0.0	0.0	0,0,0
3154	0.07	0.10	0.08	126,126,138	0.0	0.0	0.0	0,0,0
3155	0.07	0.10	0.08	126,126,138	0.0	0.0	0.0	0,0,0
3156	0.07	0.11	0.08	126,126,138	0.0	0.0	0.0	0,0,0
3157	0.07	0.11	0.08	126,126,138	0.0	0.0	0.0	0,0,0
3158	0.07	0.11	0.08	126,126,138	0.0	0.0	0.0	0,0,0
3159	0.06	0.10	0.07	126,126,138	0.0	0.0	0.0	0,0,0
3160	0.05	0.08	0.05	126,126,138	0.0	0.0	0.0	0,0,0
3161	0.05	0.09	0.06	126,126,138	0.0	0.0	0.0	0,0,0
3162	0.06	0.10	0.07	126,126,138	0.0	0.0	0.0	0,0,0
3163	0.05	0.09	0.06	126,126,138	0.0	0.0	0.0	0,0,0
3164	0.05	0.08	0.06	126,126,138	0.0	0.0	0.0	0,0,0
3165	0.05	0.09	0.06	126,126,138	0.0	0.0	0.0	0,0,0
3166	0.05	0.09	0.06	126,126,138	0.0	0.0	0.0	0,0,0
3167	0.05	0.09	0.06	126,126,138	0.0	0.0	0.0	0,0,0
3168	0.06	0.10	0.07	126,126,138	0.0	0.0	0.0	0,0,0
3169	0.06	0.10	0.07	126,126,138	0.0	0.0	0.0	0,0,0
3170	0.06	0.10	0.06	126,126,138	0.0	0.0	0.0	0,0,0
3171	0.05	0.08	0.05	126,126,138	0.0	0.0	0.0	0,0,0
3172	0.05	0.09	0.06	126,126,138	0.0	0.0	0.0	0,0,0
3173	0.06	0.10	0.07	126,126,138	0.0	0.0	0.0	0,0,0
3174	0.06	0.10	0.07	126,126,138	0.0	0.0	0.0	0,0,0
3175	0.06	0.10	0.07	126,126,138	0.0	0.0	0.0	0,0,0
3176	0.05	0.09	0.06	126,126,138	0.0	0.0	0.0	0,0,0
3177	0.05	0.10	0.06	126,126,138	0.0	0.0	0.0	0,0,0
3178	0.05	0.10	0.06	126,126,138	0.0	0.0	0.0	0,0,0
3179	0.05	0.09	0.06	126,126,138	0.0	0.0	0.0	0,0,0

3180	0.06	0.10	0.07	126,126,138	0.0	0.0	0.0	0,0,0
3181	0.06	0.11	0.07	126,126,138	0.0	0.0	0.0	0,0,0
3182	0.06	0.10	0.07	126,126,138	0.0	0.0	0.0	0,0,0
3183	0.05	0.09	0.06	126,126,138	0.0	0.0	0.0	0,0,0
3184	0.05	0.09	0.05	126,126,138	0.0	0.0	0.0	0,0,0
3185	0.06	0.10	0.07	126,126,138	0.0	0.0	0.0	0,0,0
3186	0.06	0.11	0.07	126,126,138	0.0	0.0	0.0	0,0,0
3187	0.06	0.10	0.07	126,126,138	0.0	0.0	0.0	0,0,0
3188	0.06	0.09	0.07	126,126,138	0.0	0.0	0.0	0,0,0
3189	0.05	0.09	0.06	126,126,138	0.0	0.0	0.0	0,0,0
3190	0.05	0.09	0.06	126,126,138	0.0	0.0	0.0	0,0,0
3191	0.05	0.08	0.06	126,126,138	0.0	0.0	0.0	0,0,0
3192	0.05	0.09	0.06	126,126,138	0.0	0.0	0.0	0,0,0
3193	0.06	0.09	0.07	126,126,138	0.0	0.0	0.0	0,0,0
3194	0.05	0.09	0.06	126,126,138	0.0	0.0	0.0	0,0,0
3195	0.05	0.08	0.05	126,126,138	0.0	0.0	0.0	0,0,0
3196	0.06	0.10	0.07	126,126,138	0.0	0.0	0.0	0,0,0
3197	0.07	0.11	0.08	126,126,138	0.0	0.0	0.0	0,0,0
3198	0.07	0.11	0.08	126,126,138	0.0	0.0	0.0	0,0,0
3199	0.07	0.11	0.08	126,126,138	0.0	0.0	0.0	0,0,0
3200	0.07	0.10	0.08	126,126,138	0.0	0.0	0.0	0,0,0
3252	0.04	0.07	0.05	126,130,138	0.0	0.0	0.0	0,0,0
3253	0.04	0.07	0.05	126,130,138	0.0	0.0	0.0	0,0,0
3254	0.08	0.13	0.09	130,130,139	0.0	0.0	0.0	0,0,0
3255	0.07	0.12	0.08	130,130,139	0.0	0.0	0.0	0,0,0
3256	0.09	0.15	0.11	130,130,139	0.0	0.0	0.0	0,0,0
3257	0.09	0.14	0.11	130,130,139	0.0	0.0	0.0	0,0,0
3258	0.08	0.13	0.10	130,130,139	0.0	0.0	0.0	0,0,0
3259	0.09	0.14	0.10	130,130,139	0.0	0.0	0.0	0,0,0
3260	0.05	0.10	0.06	130,130,139	0.0	0.0	0.0	0,0,0
3261	0.06	0.10	0.07	130,130,139	0.0	0.0	0.0	0,0,0
3262	0.04	0.07	0.04	130,130,139	0.0	0.0	0.0	0,0,0
3263	0.04	0.06	0.04	130,130,139	0.0	0.0	0.0	0,0,0
3264	0.07	0.11	0.08	130,130,139	0.0	0.0	0.0	0,0,0
3265	0.06	0.12	0.07	130,130,139	0.0	0.0	0.0	0,0,0
3266	0.10	0.16	0.12	130,130,139	0.0	0.0	0.0	0,0,0
3267	0.10	0.16	0.11	130,130,139	0.0	0.0	0.0	0,0,0
3268	0.11	0.17	0.13	130,130,139	0.0	0.0	0.0	0,0,0
3269	0.11	0.17	0.13	130,130,139	0.0	0.0	0.0	0,0,0
3270	0.09	0.15	0.11	130,130,139	0.0	0.0	0.0	0,0,0
3271	0.10	0.16	0.11	130,130,139	0.0	0.0	0.0	0,0,0
3272	0.06	0.11	0.07	130,130,139	0.0	0.0	0.0	0,0,0
3273	0.06	0.10	0.07	130,130,139	0.0	0.0	0.0	0,0,0
3274	0.03	0.06	0.04	130,130,139	0.0	0.0	0.0	0,0,0
3275	0.03	0.06	0.04	130,130,139	0.0	0.0	0.0	0,0,0
3276	0.06	0.11	0.07	130,130,139	0.0	0.0	0.0	0,0,0
3277	0.06	0.11	0.07	130,130,139	0.0	0.0	0.0	0,0,0
3278	0.10	0.17	0.12	130,130,139	0.0	0.0	0.0	0,0,0
3279	0.09	0.16	0.11	130,130,139	0.0	0.0	0.0	0,0,0
3280	0.11	0.18	0.13	130,130,139	0.0	0.0	0.0	0,0,0
3281	0.11	0.18	0.13	130,130,139	0.0	0.0	0.0	0,0,0
3282	0.10	0.16	0.11	130,130,139	0.0	0.0	0.0	0,0,0
3283	0.10	0.17	0.12	130,130,139	0.0	0.0	0.0	0,0,0
3284	0.06	0.12	0.07	130,130,139	0.0	0.0	0.0	0,0,0
3285	0.07	0.11	0.08	130,130,139	0.0	0.0	0.0	0,0,0
3286	0.03	0.06	0.04	130,130,139	0.0	0.0	0.0	0,0,0
3287	0.04	0.07	0.04	130,130,139	0.0	0.0	0.0	0,0,0
3288	0.06	0.10	0.07	130,130,139	0.0	0.0	0.0	0,0,0
3289	0.05	0.10	0.06	130,130,139	0.0	0.0	0.0	0,0,0
3290	0.09	0.14	0.10	130,130,139	0.0	0.0	0.0	0,0,0
3291	0.08	0.13	0.10	130,130,139	0.0	0.0	0.0	0,0,0
3292	0.09	0.14	0.11	130,130,139	0.0	0.0	0.0	0,0,0
3293	0.09	0.15	0.11	130,130,139	0.0	0.0	0.0	0,0,0
3294	0.07	0.12	0.08	130,130,139	0.0	0.0	0.0	0,0,0
3295	0.08	0.13	0.09	130,130,139	0.0	0.0	0.0	0,0,0
3296	0.04	0.07	0.05	126,130,139	0.0	0.0	0.0	0,0,0
3297	0.04	0.07	0.05	130,130,139	0.0	0.0	0.0	0,0,0
3321	0.04	0.08	0.05	130,130,139	0.0	0.0	0.0	0,0,0
3322	0.04	0.07	0.05	130,130,139	0.0	0.0	0.0	0,0,0
3323	0.10	0.17	0.12	130,130,139	0.0	0.0	0.0	0,0,0
3324	0.10	0.14	0.12	130,130,139	0.0	0.0	0.0	0,0,0
3325	0.13	0.20	0.15	130,130,139	0.0	0.0	0.0	0,0,0
3326	0.13	0.20	0.15	130,130,139	0.0	0.0	0.0	0,0,0
3327	0.12	0.17	0.13	130,130,139	0.0	0.0	0.0	0,0,0
3328	0.12	0.18	0.14	130,130,139	0.0	0.0	0.0	0,0,0
3329	0.07	0.10	0.08	130,130,139	0.0	0.0	0.0	0,0,0
3330	0.07	0.12	0.09	130,130,139	0.0	0.0	0.0	0,0,0
3331	0.05	0.08	0.05	130,130,139	0.0	0.0	0.0	0,0,0

3332	0.05	0.08	0.05	130,130,139	0.0	0.0	0.0	0,0,0
3333	0.09	0.14	0.10	130,130,139	0.0	0.0	0.0	0,0,0
3334	0.08	0.12	0.10	130,130,139	0.0	0.0	0.0	0,0,0
3335	0.14	0.21	0.16	130,130,139	0.0	0.0	0.0	0,0,0
3336	0.13	0.20	0.16	130,130,139	0.0	0.0	0.0	0,0,0
3337	0.15	0.23	0.18	130,130,139	0.0	0.0	0.0	0,0,0
3338	0.15	0.23	0.18	130,130,139	0.0	0.0	0.0	0,0,0
3339	0.13	0.19	0.15	130,130,139	0.0	0.0	0.0	0,0,0
3340	0.13	0.20	0.15	130,130,139	0.0	0.0	0.0	0,0,0
3341	0.07	0.11	0.08	130,130,139	0.0	0.0	0.0	0,0,0
3342	0.08	0.12	0.09	130,130,139	0.0	0.0	0.0	0,0,0
3343	0.04	0.08	0.05	130,130,139	0.0	0.0	0.0	0,0,0
3344	0.04	0.07	0.05	130,130,139	0.0	0.0	0.0	0,0,0
3345	0.08	0.13	0.09	130,130,139	0.0	0.0	0.0	0,0,0
3346	0.08	0.11	0.09	130,130,139	0.0	0.0	0.0	0,0,0
3347	0.13	0.21	0.16	130,130,139	0.0	0.0	0.0	0,0,0
3348	0.13	0.20	0.15	130,130,139	0.0	0.0	0.0	0,0,0
3349	0.16	0.24	0.18	130,130,139	0.0	0.0	0.0	0,0,0
3350	0.16	0.24	0.18	130,130,139	0.0	0.0	0.0	0,0,0
3351	0.13	0.20	0.16	130,130,139	0.0	0.0	0.0	0,0,0
3352	0.14	0.21	0.16	130,130,139	0.0	0.0	0.0	0,0,0
3353	0.08	0.12	0.10	130,130,139	0.0	0.0	0.0	0,0,0
3354	0.08	0.14	0.10	130,130,139	0.0	0.0	0.0	0,0,0
3355	0.05	0.08	0.05	130,130,139	0.0	0.0	0.0	0,0,0
3356	0.04	0.08	0.05	130,130,139	0.0	0.0	0.0	0,0,0
3357	0.07	0.12	0.08	130,130,139	0.0	0.0	0.0	0,0,0
3358	0.07	0.10	0.08	130,130,139	0.0	0.0	0.0	0,0,0
3359	0.12	0.18	0.14	130,130,139	0.0	0.0	0.0	0,0,0
3360	0.11	0.17	0.13	130,130,139	0.0	0.0	0.0	0,0,0
3361	0.13	0.20	0.15	130,130,139	0.0	0.0	0.0	0,0,0
3362	0.13	0.20	0.15	130,130,139	0.0	0.0	0.0	0,0,0
3363	0.10	0.14	0.12	130,130,139	0.0	0.0	0.0	0,0,0
3364	0.10	0.16	0.12	130,130,139	0.0	0.0	0.0	0,0,0
3365	0.05	0.07	0.05	130,130,139	0.0	0.0	0.0	0,0,0
3366	0.04	0.08	0.05	130,130,139	0.0	0.0	0.0	0,0,0
3390	0.03	0.07	0.04	130,130,139	0.0	0.0	0.0	0,0,0
3391	0.04	0.07	0.05	130,130,139	0.0	0.0	0.0	0,0,0
3392	0.09	0.17	0.10	130,130,139	0.0	0.0	0.0	0,0,0
3393	0.10	0.16	0.11	130,130,139	0.0	0.0	0.0	0,0,0
3394	0.12	0.21	0.14	130,130,139	0.0	0.0	0.0	0,0,0
3395	0.12	0.21	0.14	130,130,139	0.0	0.0	0.0	0,0,0
3396	0.11	0.18	0.13	130,130,139	0.0	0.0	0.0	0,0,0
3397	0.11	0.19	0.12	130,130,139	0.0	0.0	0.0	0,0,0
3398	0.07	0.12	0.08	130,130,139	0.0	0.0	0.0	0,0,0
3399	0.06	0.12	0.08	130,130,139	0.0	0.0	0.0	0,0,0
3400	0.04	0.08	0.05	130,130,139	0.0	0.0	0.0	0,0,0
3401	0.04	0.08	0.05	130,130,139	0.0	0.0	0.0	0,0,0
3402	0.07	0.14	0.09	130,130,139	0.0	0.0	0.0	0,0,0
3403	0.08	0.13	0.09	130,130,139	0.0	0.0	0.0	0,0,0
3404	0.12	0.21	0.14	130,130,139	0.0	0.0	0.0	0,0,0
3405	0.12	0.21	0.14	130,130,139	0.0	0.0	0.0	0,0,0
3406	0.14	0.24	0.16	130,130,139	0.0	0.0	0.0	0,0,0
3407	0.14	0.24	0.16	130,130,139	0.0	0.0	0.0	0,0,0
3408	0.12	0.20	0.14	130,130,139	0.0	0.0	0.0	0,0,0
3409	0.11	0.21	0.13	130,130,139	0.0	0.0	0.0	0,0,0
3410	0.07	0.12	0.08	130,130,139	0.0	0.0	0.0	0,0,0
3411	0.07	0.12	0.08	130,130,139	0.0	0.0	0.0	0,0,0
3412	0.04	0.07	0.04	130,130,139	0.0	0.0	0.0	0,0,0
3413	0.04	0.07	0.04	130,130,139	0.0	0.0	0.0	0,0,0
3414	0.07	0.13	0.08	130,130,139	0.0	0.0	0.0	0,0,0
3415	0.07	0.13	0.09	130,130,139	0.0	0.0	0.0	0,0,0
3416	0.12	0.22	0.14	130,130,139	0.0	0.0	0.0	0,0,0
3417	0.12	0.21	0.14	130,130,139	0.0	0.0	0.0	0,0,0
3418	0.14	0.25	0.17	130,130,139	0.0	0.0	0.0	0,0,0
3419	0.14	0.25	0.17	130,130,139	0.0	0.0	0.0	0,0,0
3420	0.13	0.21	0.15	130,130,139	0.0	0.0	0.0	0,0,0
3421	0.12	0.22	0.14	130,130,139	0.0	0.0	0.0	0,0,0
3422	0.08	0.13	0.09	130,130,139	0.0	0.0	0.0	0,0,0
3423	0.07	0.14	0.09	130,130,139	0.0	0.0	0.0	0,0,0
3424	0.04	0.08	0.05	130,130,139	0.0	0.0	0.0	0,0,0
3425	0.04	0.08	0.04	130,130,139	0.0	0.0	0.0	0,0,0
3426	0.06	0.12	0.07	130,130,139	0.0	0.0	0.0	0,0,0
3427	0.07	0.11	0.08	130,130,139	0.0	0.0	0.0	0,0,0
3428	0.11	0.19	0.12	130,130,139	0.0	0.0	0.0	0,0,0
3429	0.11	0.18	0.13	130,130,139	0.0	0.0	0.0	0,0,0
3430	0.12	0.21	0.14	130,130,139	0.0	0.0	0.0	0,0,0
3431	0.12	0.21	0.14	130,130,139	0.0	0.0	0.0	0,0,0
3432	0.10	0.16	0.11	130,130,139	0.0	0.0	0.0	0,0,0

3433	0.09	0.17	0.10	130,130,139	0.0	0.0	0.0	0,0,0
3434	0.04	0.07	0.05	130,130,139	0.0	0.0	0.0	0,0,0
3435	0.03	0.07	0.04	130,130,139	0.0	0.0	0.0	0,0,0
3503	8.57e-03	0.02	0.01	130,130,139	0.0	0.0	0.0	0,0,0
3504	0.01	0.03	0.01	130,130,138	0.0	0.0	0.0	0,0,0
3505	9.57e-03	0.04	0.01	130,130,139	0.0	0.0	0.0	0,0,0
3506	0.02	0.05	0.02	130,130,139	0.0	0.0	0.0	0,0,0
3507	0.02	0.05	0.02	130,130,139	0.0	0.0	0.0	0,0,0
3508	0.02	0.05	0.02	130,130,139	0.0	0.0	0.0	0,0,0
3509	0.02	0.05	0.02	130,130,139	0.0	0.0	0.0	0,0,0
3510	0.02	0.05	0.02	130,130,139	0.0	0.0	0.0	0,0,0
3511	0.02	0.04	0.02	130,130,139	0.0	0.0	0.0	0,0,0
3512	9.61e-03	0.03	0.01	130,130,139	0.0	0.0	0.0	0,0,0
3513	8.03e-03	0.02	9.26e-03	130,130,139	0.0	0.0	0.0	0,0,0
3514	9.12e-03	0.03	0.01	130,130,139	0.0	0.0	0.0	0,0,0
3515	9.40e-03	0.03	0.01	130,130,139	0.0	0.0	0.0	0,0,0
3516	0.02	0.04	0.02	130,130,139	0.0	0.0	0.0	0,0,0
3517	0.02	0.05	0.02	130,130,139	0.0	0.0	0.0	0,0,0
3518	0.02	0.06	0.03	130,130,139	0.0	0.0	0.0	0,0,0
3519	0.02	0.06	0.03	130,130,139	0.0	0.0	0.0	0,0,0
3520	0.02	0.06	0.03	130,130,139	0.0	0.0	0.0	0,0,0
3521	0.02	0.06	0.03	130,130,139	0.0	0.0	0.0	0,0,0
3522	0.02	0.05	0.02	130,130,139	0.0	0.0	0.0	0,0,0
3523	0.02	0.04	0.02	130,130,139	0.0	0.0	0.0	0,0,0
3524	9.15e-03	0.03	0.01	130,130,139	0.0	0.0	0.0	0,0,0
3525	7.72e-03	0.02	8.80e-03	130,130,139	0.0	0.0	0.0	0,0,0
3526	8.09e-03	0.02	9.30e-03	130,130,139	0.0	0.0	0.0	0,0,0
3527	9.44e-03	0.03	0.01	130,130,139	0.0	0.0	0.0	0,0,0
3528	0.02	0.04	0.02	130,130,139	0.0	0.0	0.0	0,0,0
3529	0.02	0.05	0.02	130,130,139	0.0	0.0	0.0	0,0,0
3530	0.02	0.06	0.03	130,130,139	0.0	0.0	0.0	0,0,0
3531	0.02	0.06	0.03	130,130,139	0.0	0.0	0.0	0,0,0
3532	0.02	0.06	0.03	130,130,139	0.0	0.0	0.0	0,0,0
3533	0.02	0.06	0.03	130,130,139	0.0	0.0	0.0	0,0,0
3534	0.02	0.05	0.02	130,130,139	0.0	0.0	0.0	0,0,0
3535	0.02	0.04	0.02	130,130,139	0.0	0.0	0.0	0,0,0
3536	8.99e-03	0.03	0.01	130,130,139	0.0	0.0	0.0	0,0,0
3537	8.89e-03	0.03	0.01	130,130,139	0.0	0.0	0.0	0,0,0
3538	7.92e-03	0.02	9.11e-03	130,130,139	0.0	0.0	0.0	0,0,0
3539	9.78e-03	0.03	0.01	130,130,139	0.0	0.0	0.0	0,0,0
3540	0.02	0.04	0.02	130,130,139	0.0	0.0	0.0	0,0,0
3541	0.02	0.05	0.02	130,130,139	0.0	0.0	0.0	0,0,0
3542	0.02	0.05	0.02	130,130,139	0.0	0.0	0.0	0,0,0
3543	0.02	0.05	0.02	130,130,139	0.0	0.0	0.0	0,0,0
3544	0.02	0.05	0.02	130,130,139	0.0	0.0	0.0	0,0,0
3545	0.02	0.05	0.02	130,130,139	0.0	0.0	0.0	0,0,0
3546	9.63e-03	0.04	0.01	130,130,139	0.0	0.0	0.0	0,0,0
3547	0.01	0.03	0.01	126,130,138	0.0	0.0	0.0	0,0,0
3548	8.70e-03	0.02	0.01	130,130,139	0.0	0.0	0.0	0,0,0
3549	5.56e-03	0.01	6.54e-03	130,130,139	0.0	0.0	0.0	0,0,0
3550	0.01	0.03	0.01	130,130,139	0.0	0.0	0.0	0,0,0
3551	6.76e-03	0.01	7.90e-03	130,130,139	0.0	0.0	0.0	0,0,0
3552	6.19e-03	0.02	7.24e-03	130,130,139	0.0	0.0	0.0	0,0,0
3553	6.38e-03	0.01	7.48e-03	130,130,139	0.0	0.0	0.0	0,0,0
3554	6.06e-03	0.02	7.17e-03	130,130,139	0.0	0.0	0.0	0,0,0
3555	5.77e-03	0.01	6.69e-03	130,130,139	0.0	0.0	0.0	0,0,0
3556	5.50e-03	0.01	6.44e-03	130,130,139	0.0	0.0	0.0	0,0,0
3557	5.57e-03	0.01	6.48e-03	130,130,139	0.0	0.0	0.0	0,0,0
3558	5.71e-03	0.01	6.72e-03	130,130,139	0.0	0.0	0.0	0,0,0
3559	5.75e-03	9.46e-03	6.74e-03	130,130,139	0.0	0.0	0.0	0,0,0
3560	5.71e-03	0.01	6.80e-03	130,130,139	0.0	0.0	0.0	0,0,0
3561	5.79e-03	9.53e-03	6.87e-03	130,130,139	0.0	0.0	0.0	0,0,0
3562	5.60e-03	0.01	6.79e-03	130,130,139	0.0	0.0	0.0	0,0,0
3563	5.67e-03	0.01	6.83e-03	130,130,139	0.0	0.0	0.0	0,0,0
3564	5.76e-03	0.01	7.01e-03	130,130,139	0.0	0.0	0.0	0,0,0
3565	5.78e-03	0.01	7.04e-03	130,130,139	0.0	0.0	0.0	0,0,0
3566	5.85e-03	0.01	7.13e-03	130,130,139	0.0	0.0	0.0	0,0,0
3567	5.82e-03	0.01	7.10e-03	130,130,139	0.0	0.0	0.0	0,0,0
3568	5.81e-03	0.01	7.10e-03	130,130,139	0.0	0.0	0.0	0,0,0
3569	5.77e-03	0.01	7.05e-03	130,130,139	0.0	0.0	0.0	0,0,0
3570	5.92e-03	9.60e-03	7.20e-03	130,130,139	0.0	0.0	0.0	0,0,0
3571	5.90e-03	8.88e-03	7.17e-03	130,130,139	0.0	0.0	0.0	0,0,0
3572	5.91e-03	9.68e-03	7.19e-03	130,130,139	0.0	0.0	0.0	0,0,0
3573	5.95e-03	0.01	7.24e-03	130,130,139	0.0	0.0	0.0	0,0,0
3574	5.81e-03	0.01	7.10e-03	130,130,139	0.0	0.0	0.0	0,0,0
3575	5.86e-03	0.01	7.16e-03	130,130,139	0.0	0.0	0.0	0,0,0
3576	5.85e-03	0.01	7.15e-03	130,130,139	0.0	0.0	0.0	0,0,0
3577	5.87e-03	0.02	7.17e-03	130,130,139	0.0	0.0	0.0	0,0,0

3578	5.79e-03	0.01	7.05e-03	130,130,139	0.0	0.0	0.0	0,0,0
3579	5.78e-03	0.02	7.03e-03	130,130,139	0.0	0.0	0.0	0,0,0
3580	5.69e-03	0.01	6.86e-03	130,130,139	0.0	0.0	0.0	0,0,0
3581	5.61e-03	0.01	6.79e-03	130,130,139	0.0	0.0	0.0	0,0,0
3582	5.83e-03	9.90e-03	6.91e-03	130,130,139	0.0	0.0	0.0	0,0,0
3583	5.95e-03	0.01	7.11e-03	126,130,138	0.0	0.0	0.0	0,0,0
3584	5.79e-03	9.17e-03	6.78e-03	130,130,139	0.0	0.0	0.0	0,0,0
3585	5.73e-03	0.01	6.73e-03	130,130,139	0.0	0.0	0.0	0,0,0
3586	5.65e-03	0.01	6.58e-03	130,130,139	0.0	0.0	0.0	0,0,0
3587	5.90e-03	0.02	6.94e-03	130,130,139	0.0	0.0	0.0	0,0,0
3588	5.86e-03	0.01	6.83e-03	130,130,139	0.0	0.0	0.0	0,0,0
3589	6.40e-03	0.02	7.62e-03	130,130,139	0.0	0.0	0.0	0,0,0
3590	6.45e-03	0.01	7.58e-03	130,130,139	0.0	0.0	0.0	0,0,0
3591	6.25e-03	0.02	7.42e-03	130,130,139	0.0	0.0	0.0	0,0,0
3592	6.77e-03	0.01	7.91e-03	130,130,139	0.0	0.0	0.0	0,0,0
3593	0.01	0.03	0.01	130,130,138	0.0	0.0	0.0	0,0,0
3594	5.59e-03	0.01	6.58e-03	130,130,139	0.0	0.0	0.0	0,0,0
3595	5.66e-03	9.21e-03	6.70e-03	126,126,138	0.0	0.0	0.0	0,0,0
3596	9.93e-03	0.02	0.01	126,130,138	0.0	0.0	0.0	0,0,0
3597	6.67e-03	0.01	7.80e-03	126,130,138	0.0	0.0	0.0	0,0,0
3598	6.12e-03	0.01	7.17e-03	126,130,138	0.0	0.0	0.0	0,0,0
3599	6.18e-03	0.01	7.24e-03	126,130,138	0.0	0.0	0.0	0,0,0
3600	6.09e-03	0.01	7.21e-03	130,130,139	0.0	0.0	0.0	0,0,0
3601	5.50e-03	0.01	6.39e-03	126,130,138	0.0	0.0	0.0	0,0,0
3602	5.55e-03	9.83e-03	6.48e-03	130,130,139	0.0	0.0	0.0	0,0,0
3603	5.43e-03	9.82e-03	6.35e-03	126,130,138	0.0	0.0	0.0	0,0,0
3604	5.78e-03	8.44e-03	6.78e-03	130,130,139	0.0	0.0	0.0	0,0,0
3605	5.74e-03	8.46e-03	6.74e-03	130,130,139	0.0	0.0	0.0	0,0,0
3606	5.76e-03	8.43e-03	6.85e-03	130,130,139	0.0	0.0	0.0	0,0,0
3607	5.76e-03	8.46e-03	6.84e-03	130,130,139	0.0	0.0	0.0	0,0,0
3608	5.67e-03	9.88e-03	7.05e-03	130,130,139	0.0	0.0	0.0	0,0,0
3609	5.68e-03	9.93e-03	7.06e-03	130,130,139	0.0	0.0	0.0	0,0,0
3610	5.92e-03	0.01	7.35e-03	130,130,139	0.0	0.0	0.0	0,0,0
3611	5.92e-03	0.01	7.36e-03	130,130,139	0.0	0.0	0.0	0,0,0
3612	6.03e-03	0.01	7.49e-03	130,130,139	0.0	0.0	0.0	0,0,0
3613	6.03e-03	0.01	7.50e-03	130,130,139	0.0	0.0	0.0	0,0,0
3614	6.02e-03	9.47e-03	7.50e-03	130,130,139	0.0	0.0	0.0	0,0,0
3615	6.03e-03	9.44e-03	7.50e-03	130,130,139	0.0	0.0	0.0	0,0,0
3616	6.10e-03	8.03e-03	7.60e-03	130,130,139	0.0	0.0	0.0	0,0,0
3617	6.10e-03	7.99e-03	7.59e-03	130,130,139	0.0	0.0	0.0	0,0,0
3618	6.15e-03	8.45e-03	7.66e-03	130,130,139	0.0	0.0	0.0	0,0,0
3619	6.13e-03	8.44e-03	7.64e-03	130,130,139	0.0	0.0	0.0	0,0,0
3620	6.12e-03	0.01	7.62e-03	130,130,139	0.0	0.0	0.0	0,0,0
3621	6.11e-03	0.01	7.61e-03	130,130,139	0.0	0.0	0.0	0,0,0
3622	6.13e-03	0.01	7.63e-03	130,130,139	0.0	0.0	0.0	0,0,0
3623	6.13e-03	0.01	7.63e-03	130,130,139	0.0	0.0	0.0	0,0,0
3624	6.01e-03	0.01	7.47e-03	130,130,139	0.0	0.0	0.0	0,0,0
3625	6.01e-03	0.01	7.47e-03	130,130,139	0.0	0.0	0.0	0,0,0
3626	5.74e-03	0.01	7.14e-03	130,130,139	0.0	0.0	0.0	0,0,0
3627	5.74e-03	0.01	7.14e-03	130,130,139	0.0	0.0	0.0	0,0,0
3628	5.78e-03	8.71e-03	6.86e-03	130,130,139	0.0	0.0	0.0	0,0,0
3629	5.98e-03	8.69e-03	7.00e-03	126,130,138	0.0	0.0	0.0	0,0,0
3630	5.77e-03	8.32e-03	6.77e-03	130,130,139	0.0	0.0	0.0	0,0,0
3631	5.82e-03	8.37e-03	6.81e-03	130,130,139	0.0	0.0	0.0	0,0,0
3632	5.49e-03	9.55e-03	6.41e-03	126,130,138	0.0	0.0	0.0	0,0,0
3633	5.95e-03	9.61e-03	7.00e-03	130,130,139	0.0	0.0	0.0	0,0,0
3634	5.59e-03	0.01	6.50e-03	126,130,138	0.0	0.0	0.0	0,0,0
3635	6.43e-03	0.01	7.66e-03	130,130,139	0.0	0.0	0.0	0,0,0
3636	6.23e-03	0.01	7.32e-03	126,130,138	0.0	0.0	0.0	0,0,0
3637	6.30e-03	0.01	7.49e-03	126,130,138	0.0	0.0	0.0	0,0,0
3638	6.68e-03	0.01	7.81e-03	126,130,138	0.0	0.0	0.0	0,0,0
3639	0.01	0.02	0.01	126,130,138	0.0	0.0	0.0	0,0,0
3640	5.69e-03	9.28e-03	6.74e-03	126,126,138	0.0	0.0	0.0	0,0,0
3641	8.06e-03	0.01	9.38e-03	126,126,138	0.0	0.0	0.0	0,0,0
3642	7.97e-03	0.02	9.69e-03	130,130,139	0.0	0.0	0.0	0,0,0
3643	5.37e-03	0.01	6.38e-03	130,130,139	0.0	0.0	0.0	0,0,0
3644	5.61e-03	9.93e-03	6.61e-03	130,130,139	0.0	0.0	0.0	0,0,0
3645	5.35e-03	0.01	6.39e-03	126,130,138	0.0	0.0	0.0	0,0,0
3646	5.34e-03	9.79e-03	6.24e-03	130,130,139	0.0	0.0	0.0	0,0,0
3647	5.19e-03	9.91e-03	6.17e-03	126,130,138	0.0	0.0	0.0	0,0,0
3648	5.27e-03	9.37e-03	6.26e-03	126,130,138	0.0	0.0	0.0	0,0,0
3649	5.22e-03	9.49e-03	6.21e-03	126,126,138	0.0	0.0	0.0	0,0,0
3650	5.42e-03	9.31e-03	6.44e-03	126,126,138	0.0	0.0	0.0	0,0,0
3651	5.37e-03	9.63e-03	6.42e-03	126,126,139	0.0	0.0	0.0	0,0,0
3652	5.46e-03	9.35e-03	6.78e-03	130,126,139	0.0	0.0	0.0	0,0,0
3653	5.47e-03	9.57e-03	6.79e-03	130,130,139	0.0	0.0	0.0	0,0,0
3654	5.66e-03	9.30e-03	7.03e-03	130,130,139	0.0	0.0	0.0	0,0,0
3655	5.66e-03	9.43e-03	7.04e-03	130,126,139	0.0	0.0	0.0	0,0,0

3656	5.88e-03	9.89e-03	7.30e-03	130,130,139	0.0	0.0	0.0	0,0,0
3657	5.89e-03	9.92e-03	7.32e-03	130,130,139	0.0	0.0	0.0	0,0,0
3658	5.99e-03	9.84e-03	7.45e-03	130,130,139	0.0	0.0	0.0	0,0,0
3659	6.01e-03	9.84e-03	7.47e-03	130,130,139	0.0	0.0	0.0	0,0,0
3660	6.00e-03	9.34e-03	7.47e-03	130,126,139	0.0	0.0	0.0	0,0,0
3661	6.02e-03	9.37e-03	7.49e-03	130,126,139	0.0	0.0	0.0	0,0,0
3662	6.09e-03	9.48e-03	7.59e-03	130,126,139	0.0	0.0	0.0	0,0,0
3663	6.09e-03	9.48e-03	7.59e-03	130,126,139	0.0	0.0	0.0	0,0,0
3664	6.16e-03	9.54e-03	7.67e-03	130,126,139	0.0	0.0	0.0	0,0,0
3665	6.12e-03	9.48e-03	7.63e-03	130,126,139	0.0	0.0	0.0	0,0,0
3666	6.12e-03	9.50e-03	7.62e-03	130,130,139	0.0	0.0	0.0	0,0,0
3667	6.08e-03	9.53e-03	7.58e-03	130,130,139	0.0	0.0	0.0	0,0,0
3668	6.11e-03	0.01	7.60e-03	130,130,139	0.0	0.0	0.0	0,0,0
3669	6.09e-03	0.01	7.58e-03	130,130,139	0.0	0.0	0.0	0,0,0
3670	5.97e-03	0.01	7.42e-03	130,130,139	0.0	0.0	0.0	0,0,0
3671	5.97e-03	0.01	7.42e-03	130,130,139	0.0	0.0	0.0	0,0,0
3672	5.70e-03	9.56e-03	7.10e-03	130,130,139	0.0	0.0	0.0	0,0,0
3673	5.74e-03	9.52e-03	7.13e-03	130,130,139	0.0	0.0	0.0	0,0,0
3674	5.47e-03	9.51e-03	6.79e-03	130,126,139	0.0	0.0	0.0	0,0,0
3675	5.56e-03	9.34e-03	6.87e-03	130,126,139	0.0	0.0	0.0	0,0,0
3676	5.37e-03	9.51e-03	6.39e-03	126,126,138	0.0	0.0	0.0	0,0,0
3677	5.45e-03	9.30e-03	6.48e-03	126,126,138	0.0	0.0	0.0	0,0,0
3678	5.23e-03	9.36e-03	6.23e-03	126,126,138	0.0	0.0	0.0	0,0,0
3679	5.30e-03	9.17e-03	6.30e-03	126,130,138	0.0	0.0	0.0	0,0,0
3680	5.21e-03	9.79e-03	6.20e-03	126,130,138	0.0	0.0	0.0	0,0,0
3681	5.47e-03	9.70e-03	6.42e-03	130,130,139	0.0	0.0	0.0	0,0,0
3682	5.38e-03	9.97e-03	6.43e-03	126,130,138	0.0	0.0	0.0	0,0,0
3683	5.75e-03	9.84e-03	6.80e-03	130,130,139	0.0	0.0	0.0	0,0,0
3684	5.45e-03	9.86e-03	6.49e-03	130,130,139	0.0	0.0	0.0	0,0,0
3685	8.12e-03	0.02	9.89e-03	130,130,139	0.0	0.0	0.0	0,0,0
3686	8.07e-03	0.01	9.39e-03	126,126,138	0.0	0.0	0.0	0,0,0
3687	7.26e-03	8.67e-03	8.44e-03	126,130,138	0.0	0.0	0.0	0,0,0
3688	8.86e-03	0.02	0.01	130,130,139	0.0	0.0	0.0	0,0,0
3689	5.78e-03	0.01	6.79e-03	130,130,139	0.0	0.0	0.0	0,0,0
3690	5.79e-03	0.01	6.80e-03	130,130,139	0.0	0.0	0.0	0,0,0
3691	5.53e-03	9.99e-03	6.46e-03	130,130,139	0.0	0.0	0.0	0,0,0
3692	5.53e-03	9.91e-03	6.45e-03	130,130,139	0.0	0.0	0.0	0,0,0
3693	5.44e-03	9.50e-03	6.33e-03	130,130,139	0.0	0.0	0.0	0,0,0
3694	5.43e-03	9.55e-03	6.32e-03	130,130,139	0.0	0.0	0.0	0,0,0
3695	5.35e-03	9.28e-03	6.25e-03	130,130,138	0.0	0.0	0.0	0,0,0
3696	5.36e-03	9.31e-03	6.28e-03	130,130,138	0.0	0.0	0.0	0,0,0
3697	5.30e-03	9.17e-03	6.25e-03	130,130,138	0.0	0.0	0.0	0,0,0
3698	5.33e-03	9.29e-03	6.30e-03	126,130,138	0.0	0.0	0.0	0,0,0
3699	5.36e-03	9.13e-03	6.24e-03	130,130,138	0.0	0.0	0.0	0,0,0
3700	5.31e-03	9.28e-03	6.27e-03	130,130,138	0.0	0.0	0.0	0,0,0
3701	5.40e-03	9.22e-03	6.27e-03	130,130,139	0.0	0.0	0.0	0,0,0
3702	5.38e-03	9.35e-03	6.25e-03	130,130,139	0.0	0.0	0.0	0,0,0
3703	5.40e-03	9.30e-03	6.28e-03	130,130,139	0.0	0.0	0.0	0,0,0
3704	5.40e-03	9.32e-03	6.31e-03	130,130,139	0.0	0.0	0.0	0,0,0
3705	5.37e-03	9.26e-03	6.33e-03	130,130,139	0.0	0.0	0.0	0,0,0
3706	5.37e-03	9.17e-03	6.40e-03	130,130,139	0.0	0.0	0.0	0,0,0
3707	5.28e-03	9.11e-03	6.43e-03	126,130,139	0.0	0.0	0.0	0,0,0
3708	5.32e-03	9.04e-03	6.48e-03	130,130,139	0.0	0.0	0.0	0,0,0
3709	5.29e-03	9.05e-03	6.48e-03	126,130,139	0.0	0.0	0.0	0,0,0
3710	5.29e-03	9.09e-03	6.59e-03	126,130,139	0.0	0.0	0.0	0,0,0
3711	5.31e-03	9.02e-03	6.59e-03	130,130,139	0.0	0.0	0.0	0,0,0
3712	5.29e-03	9.15e-03	6.71e-03	130,130,139	0.0	0.0	0.0	0,0,0
3713	5.37e-03	9.18e-03	6.68e-03	130,130,139	0.0	0.0	0.0	0,0,0
3714	5.38e-03	9.28e-03	6.68e-03	130,130,139	0.0	0.0	0.0	0,0,0
3715	5.41e-03	9.35e-03	6.66e-03	130,130,139	0.0	0.0	0.0	0,0,0
3716	5.42e-03	9.32e-03	6.49e-03	130,130,139	0.0	0.0	0.0	0,0,0
3717	5.40e-03	9.40e-03	6.49e-03	130,130,139	0.0	0.0	0.0	0,0,0
3718	5.42e-03	9.24e-03	6.31e-03	130,130,139	0.0	0.0	0.0	0,0,0
3719	5.37e-03	9.34e-03	6.35e-03	126,130,138	0.0	0.0	0.0	0,0,0
3720	5.39e-03	9.16e-03	6.28e-03	130,130,139	0.0	0.0	0.0	0,0,0
3721	5.39e-03	9.38e-03	6.38e-03	126,130,138	0.0	0.0	0.0	0,0,0
3722	5.34e-03	9.19e-03	6.26e-03	130,130,138	0.0	0.0	0.0	0,0,0
3723	5.40e-03	9.39e-03	6.36e-03	130,130,138	0.0	0.0	0.0	0,0,0
3724	5.39e-03	9.30e-03	6.28e-03	130,130,139	0.0	0.0	0.0	0,0,0
3725	5.47e-03	9.62e-03	6.37e-03	130,130,139	0.0	0.0	0.0	0,0,0
3726	5.48e-03	9.54e-03	6.39e-03	130,130,139	0.0	0.0	0.0	0,0,0
3727	5.58e-03	9.99e-03	6.51e-03	130,130,139	0.0	0.0	0.0	0,0,0
3728	5.58e-03	0.01	6.53e-03	130,130,139	0.0	0.0	0.0	0,0,0
3729	5.84e-03	0.01	6.87e-03	130,130,139	0.0	0.0	0.0	0,0,0
3730	5.83e-03	0.01	6.87e-03	130,130,139	0.0	0.0	0.0	0,0,0
3731	8.83e-03	0.02	0.01	130,130,139	0.0	0.0	0.0	0,0,0
3732	7.26e-03	8.60e-03	8.44e-03	126,130,138	0.0	0.0	0.0	0,0,0

Guscio	rRfck	rRfyk	rPfck	wR	wF	wP
	0.34	0.57	0.41	0.10	0.13	0.13

PRO_SAP

PROfessional Structural Analysis Program

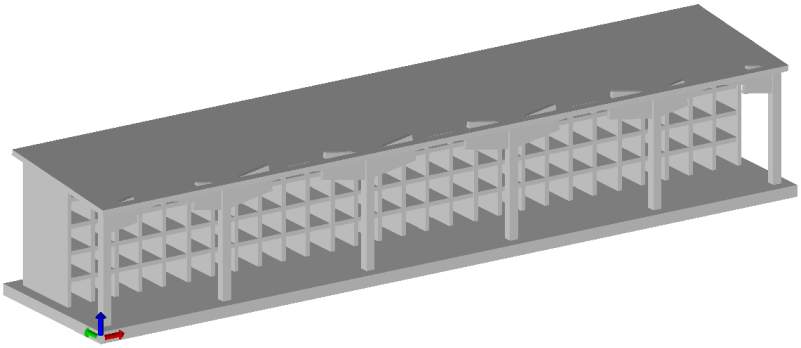

BLOCCO 2

2S.I. Software e Servizi per l'Ingegneria S.r.l.
Via Garibaldi, 90
44121 Ferrara FE (Italy)

Tel. +39 0532 200091

www.2si.it
info@2si.it

D.M. 17/01/18 cap. 10.2 Affidabilità dei codici utilizzati
https://www.2si.it/it/prodotti/affidabilita/

SCHEMA MODELLO ED ESPLOSO

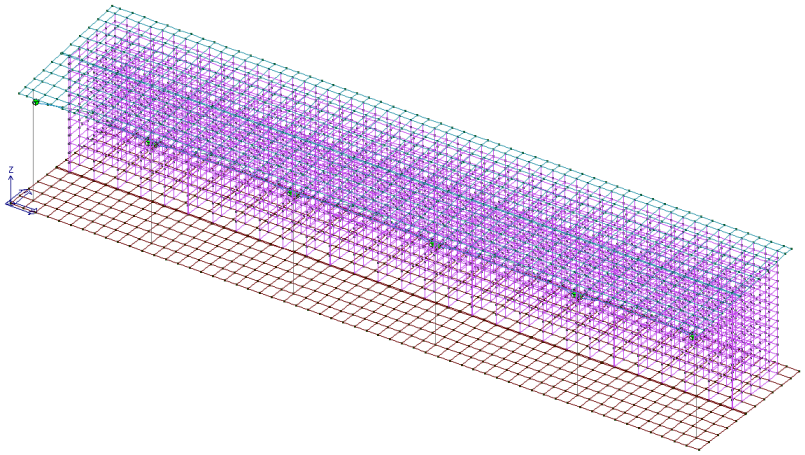

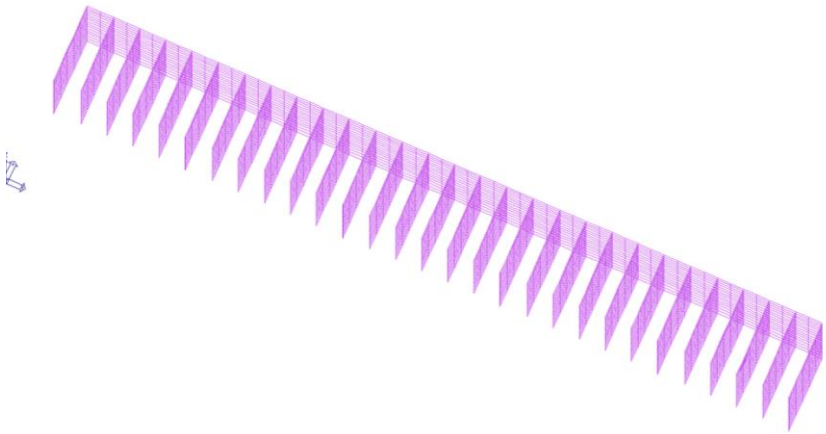

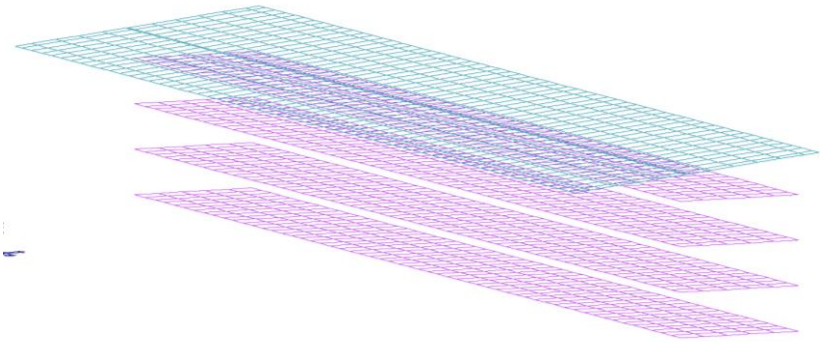

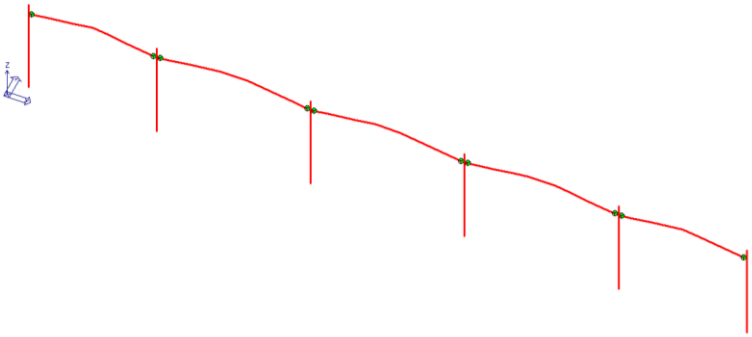

Descrizione generale dell'opera	
Fabbricato ad uso	
Ubicazione	Comune di BRACCIANO (RM) (Regione LAZIO)
	Località BRACCIANO (RM)
	Longitudine 12.168, Latitudine 42.108

Principali caratteristiche della struttura	
Struttura regolare in pianta	si
Struttura regolare in altezza	si
Classe di duttilità	bassa

Parametri della struttura			
Classe d'uso	Vita Vn [anni]	Coeff. Uso	Periodo Vr [anni]
III	50.0	1.5	75.0

Fattore di struttura/comportamento
1.5

Tipo di analisi strutturale	
Carichi verticali	SI
Sismica dinamica lineare	SI

Di seguito si indicano l'origine e le caratteristiche dei codici di calcolo utilizzati riportando titolo, produttore e distributore, versione, estremi della licenza d'uso:

Informazioni sul codice di calcolo	
Titolo:	PRO_SAP PROfessional Structural Analysis Program
Versione:	PROFESSIONAL (build 2019-01-184)
Produttore-Distributore:	2S.I. Software e Servizi per l'Ingegneria s.r.l., Ferrara
Dati utente finale:	ing.Pasquale Fusco
Codice Utente:	00152cli
Codice Licenza:	Licenza dsi3164

Un attento esame preliminare della documentazione a corredo del software ***ha consentito di valutarne l'affidabilità e soprattutto l'idoneità al caso specifico***. La documentazione, fornita dal produttore e distributore del software, contiene una esauriente descrizione delle basi teoriche e degli algoritmi impiegati, l'individuazione dei campi d'impiego, nonché casi prova interamente risolti e commentati, corredati dei file di input necessari a riprodurre l'elaborazione:

Affidabilità dei codici utilizzati
2S.I. ha verificato l'affidabilità e la robustezza del codice di calcolo attraverso un numero significativo di casi prova in cui i risultati dell'analisi numerica sono stati confrontati con soluzioni teoriche.E' possibile reperire la documentazione contenente alcuni dei più significativi casi trattati al seguente link: http://www.2si.it/Software/Affidabilità.htm

Modellazione della geometria e proprietà meccaniche:	
nodi	3384
elementi D2 (per aste, travi, pilastri…)	26
elementi D3 (per pareti, platee, gusci…)	3732
elementi solaio	0
elementi solidi	0
Dimensione del modello strutturale [cm]:	
X min =	-0.00
Xmax =	2100.00
Ymin =	-0.00
Ymax =	570.00
Zmin =	0.00
Zmax =	412.95
Strutture verticali:	
Elementi di tipo asta	NO
Pilastri	SI
Pareti	SI
Setti (a comportamento membranale)	NO
Strutture non verticali:	
Elementi di tipo asta	NO
Travi	SI
Gusci	SI

Membrane	NO
Orizzontamenti:	
Solai con la proprietà piano rigido	NO
Solai senza la proprietà piano rigido	NO
Tipo di vincoli:	
Nodi vincolati rigidamente	NO
Nodi vincolati elasticamente	NO
Nodi con isolatori sismici	NO
Fondazioni puntuali (plinti/plinti su palo)	NO
Fondazioni di tipo trave	NO
Fondazioni di tipo platea	SI
Fondazioni con elementi solidi	NO

CARATTERISTICHE MATERIALI UTILIZZATI

Il programma consente l'uso di materiali diversi. Sono previsti i seguenti tipi di materiale:

1	materiale tipo cemento armato

I materiali utilizzati nella modellazione sono individuati da una sigla identificativa ed un codice numerico (gli elementi strutturali richiamano quest'ultimo nella propria descrizione). Per ogni materiale vengono riportati in tabella i seguenti dati:

Young	modulo di elasticità normale E
Poisson	coefficiente di contrazione trasversale ni
G	modulo di elasticità tangenziale
Gamma	peso specifico
Alfa	coefficiente di dilatazione termica
Fattore di confidenza FC m	Fattore di confidenza specifico per materiale; (è riportato solo se diverso da quello globale della struttura)
Fattore di confidenza FC a	Fattore di confidenza specifico per l'armatura (è riportato solo se diverso da quello globale della struttura)
Elasto-plastico	Materiale elastico perfettamente plastico per aste non lineari
Massima compressione	Massima tensione di compressione per aste non lineari
Massima trazione	Massima tensione di trazione per aste non lineari
Fattore attrito	Coefficinete di attrito per aste non lineari
Rapporto HRDb	Rapporto di hardening a flessione
Rapporto HRDv	Rapporto di hardening a taglio

I dati sopraripportati vengono utilizzati per la modellazione dello schema statico e per la determinazione dei carichi inerziali e termici. In relazione al tipo di materiale vengono riportati inoltre:

1	cemento armato		
		Resistenza Rc	resistenza a cmpressione cubica
		Resistenza fctm	resistenza media a trazione semplice
		Coefficiente ksb	Coefficiente di riduzione della resistenza a compressione da utilizzare nello stress block

Id	Tipo / Note	V. caratt.	V. medio	Young	Poisson	G	Gamma	Alfa	Altri
		daN/cm2	daN/cm2	daN/cm2		daN/cm2	daN/cm3		
1	Calcestruzzo Classe C25/30-Calcestruzzo Classe C25/30			3.145e+05	0.20	1.310e+05	2.50e-03	1.00e-05	
	Resistenza Rc	300.0							
	Resistenza fctm		25.6						
	Coefficiente ksb								0.85
	Rapporto HRDb								1.00e-05
	Rapporto HRDv								1.00e-05

MODELLAZIONE DELLE SEZIONI

LEGENDA TABELLA DATI SEZIONI

Il programma consente l'uso di sezioni diverse. Sono previsti i seguenti tipi di sezione:

1. sezione di tipo generico
2. profilati semplici
3. profilati accoppiati e speciali

Le sezioni utilizzate nella modellazione sono individuate da una sigla identificativa ed un codice numerico (gli elementi strutturali richiamano quest'ultimo nella propria descrizione). Per ogni sezione vengono riportati in tabella i seguenti dati:

Area	area della sezione
A V2	area della sezione/fattore di taglio (per il taglio in direzione 2)
A V3	area della sezione/fattore di taglio (per il taglio in direzione 3)
Jt	fattore torsionale di rigidezza
J2-2	momento d'inerzia della sezione riferito all'asse 2
J3-3	momento d'inerzia della sezione riferito all'asse 3
W2-2	modulo di resistenza della sezione riferito all'asse 2
W3-3	modulo di resistenza della sezione riferito all'asse 3
Wp2-2	modulo di resistenza plastico della sezione riferito all'asse 2
Wp3-3	modulo di resistenza plastico della sezione riferito all'asse 3

I dati sopra riportati vengono utilizzati per la determinazione dei carichi inerziali e per la definizione delle rigidezze degli elementi strutturali; qualora il valore di Area V2 (e/o Area V3) sia nullo la deformabilità per taglio V2 (e/o V3) è trascurata. La valutazione delle caratteristiche inerziali delle sezioni è condotta nel riferimento 2-3 dell'elemento.

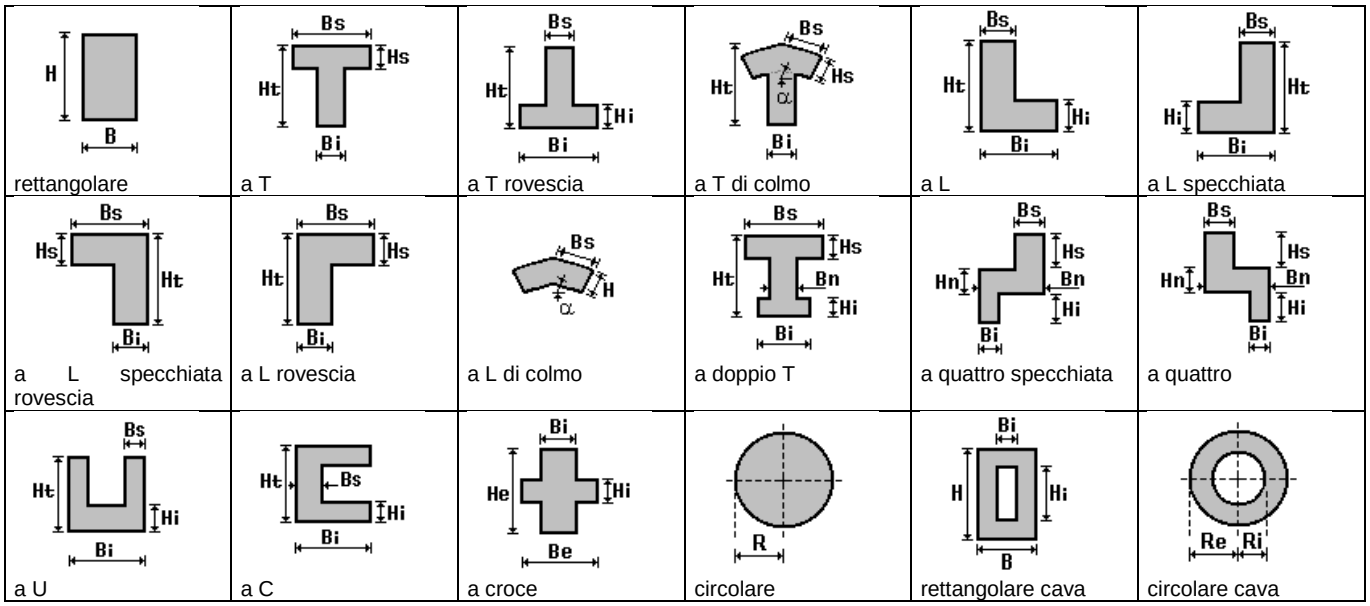

Per quanto concerne i profilati semplici ed accoppiati l'asse 2 del riferimento coincide con l'asse x riportato nei più diffusi profilatari.

Per quanto concerne le sezioni di tipo generico (tipo 1.):
i valori dimensionali con prefisso B sono riferiti all'asse 2
i valori dimensionali con prefisso H sono riferiti all'asse 3

Id	Tipo	Area	A V2	A V3	Jt	J 2-2	J 3-3	W 2-2	W 3-3	Wp 2-2	Wp 3-3
		cm2	cm2	cm2	cm4	cm4	cm4	cm3	cm3	cm3	cm3
1	Pil 30x30-Rettangolare: b=30 h=30	900.00	750.00	750.00	1.139e+05	6.750e+04	6.750e+04	4500.00	4500.00	6750.00	6750.00
2	trave 15x90-Rettangolare: b=15 h=90	1350.00	1125.00	1125.00	9.062e+04	2.531e+04	9.113e+05	3375.00	2.025e+04	5062.50	3.038e+04
3	trave 15x30-Rettangolare: b=15 h=30	450.00	375.00	375.00	2.312e+04	8437.50	3.375e+04	1125.00	2250.00	1687.50	3375.00

MODELLAZIONE STRUTTURA: ELEMENTI TRAVE

TABELLA DATI TRAVI

Il programma utilizza per la modellazione elementi a due nodi denominati in generale travi.
Ogni elemento trave è individuato dal nodo iniziale e dal nodo finale.
Ogni elemento è caratterizzato da un insieme di proprietà riportate in tabella che ne completano la modellazione.

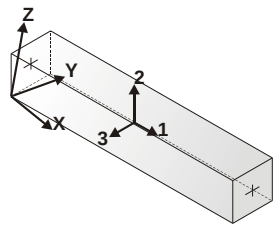

orientamento elementi 2D non verticali

orientamento elementi 2D verticali

In particolare per ogni elemento viene indicato in tabella:

Elem.	numero dell'elemento
Note	codice di comportamento: trave, trave di fondazione, pilastro, asta, asta tesa, asta compressa,
Nodo I (J)	numero del nodo iniziale (finale)
Mat.	codice del materiale assegnato all'elemento
Sez.	codice della sezione assegnata all'elemento
Rotaz.	valore della rotazione dell'elemento, attorno al proprio asse, nel caso in cui l'orientamento di default non sia adottabile; l'orientamento di default prevede per gli elementi non verticali l'asse 2 contenuto nel piano verticale e l'asse 3 orizzontale, per gli elementi verticali l'asse 2 diretto secondo X negativo e l'asse 3 diretto secondo Y negativo
Svincolo I (J)	codici di svincolo per le azioni interne; i primi sei codici si riferiscono al nodo iniziale, i restanti sei al nodo finale (il valore 1 indica che la relativa azione interna non è attiva)
Wink V	costante di sottofondo (coefficiente di Winkler) per la modellazione della trave su suolo elastico
Wink O	costante di sottofondo (coefficiente di Winkler) per la modellazione del suolo elastico orizzontale

Elem.	Note	Nodo I	Nodo J	Mat.	Sez.	Rotaz. gradi	Svincolo I	Svincolo J	Wink V daN/cm3	Wink O daN/cm3
1	Pilas.	61	3476	1	1					
2	Pilas.	71	3477	1	1					
3	Pilas.	83	3478	1	1					
4	Pilas.	95	3479	1	1					
5	Pilas.	107	3480	1	1					
6	Pilas.	117	3481	1	1					
7	Trave	3476	3830	1	2		000011			
8	Trave	3831	3477	1	2			000011		
9	Trave	3477	3832	1	2		000011			
10	Trave	3833	3478	1	2			000011		
11	Trave	3478	3834	1	2		000011			
12	Trave	3835	3479	1	2			000011		
13	Trave	3479	3836	1	2		000011			
14	Trave	3837	3480	1	2			000011		
15	Trave	3480	3838	1	2		000011			
16	Trave	3839	3481	1	2			000011		
17	Trave	3830	3840	1	2					
18	Trave	3841	3831	1	2					
19	Trave	3832	3842	1	2					
20	Trave	3843	3833	1	2					
21	Trave	3834	3844	1	2					
22	Trave	3845	3835	1	2					
23	Trave	3836	3846	1	2					
24	Trave	3847	3837	1	2					
25	Trave	3838	3848	1	2					
26	Trave	3849	3839	1	2					
27	Pilas.	3476	4136	1	1					
28	Pilas.	3477	4146	1	1					
29	Pilas.	3478	4158	1	1					
30	Pilas.	3479	4170	1	1					
31	Pilas.	3480	4182	1	1					
32	Pilas.	3481	4192	1	1					
33	Trave	3840	3850	1	3					
34	Trave	3851	3841	1	3					
35	Trave	3842	3852	1	2					
36	Trave	3853	3843	1	2					
37	Trave	3844	3854	1	2					

38	Trave	3855	3845	1	2
39	Trave	3846	3856	1	2
40	Trave	3857	3847	1	2
41	Trave	3848	3858	1	3
42	Trave	3859	3849	1	3
43	Trave	3850	4068	1	3
44	Trave	4068	3851	1	3
45	Trave	3852	4069	1	3
46	Trave	4070	3853	1	3
47	Trave	3854	4071	1	3
48	Trave	4072	3855	1	3
49	Trave	3856	4073	1	3
50	Trave	4074	3857	1	3
51	Trave	3858	4075	1	3
52	Trave	4075	3859	1	3
53	Trave	4069	4070	1	3
54	Trave	4071	4072	1	3
55	Trave	4073	4074	1	3

MODELLAZIONE STRUTTURA: ELEMENTI SHELL

LEGENDA TABELLA DATI SHELL

Il programma utilizza per la modellazione elementi a tre o quattro nodi denominati in generale shell.
Ogni elemento shell è individuato dai nodi I, J, K, L (L=I per gli elementi a tre nodi).
Ogni elemento è caratterizzato da un insieme di proprietà riportate in tabella che ne completano la modellazione.

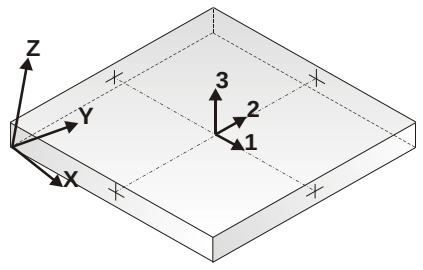

orientamento elementi 3D non verticali

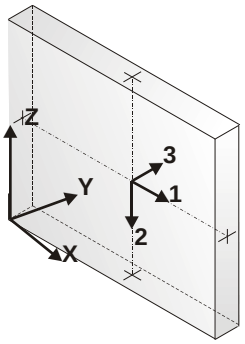

orientamento elementi 3D verticali

In particolare per ogni elemento viene indicato in tabella:

Elem.	numero dell'elemento
Note	codice di comportamento: *Guscio* (elemento guscio in elevazione non verticale) *Guscio fond.* (elemento guscio su suolo elastico) *Setto* (elemento guscio in elevazione verticale) *Membrana* (elemento guscio con comportamento membranale)
Nodo I (J, K, L)	numero del nodo I (J, K, L)
Mat.	codice del materiale assegnato all'elemento
Spessore	spessore dell'elemento (costante)
Wink V	costante di sottofondo (coefficiente di Winkler) per la modellazione del suolo elastico verticale
Wink O	costante di sottofondo (coefficiente di Winkler) per la modellazione del suolo elastico orizzontale

Elem.	Note	Nodo I	Nodo J	Nodo K	Nodo L	Mat.	Spessore	Svincolo	Wink V	Wink O
								cm	daN/cm3	daN/cm3
1	Guscio fond.	1	2	61	60	1		40.0	0.50	5.00
2	Guscio fond.	2	3	62	61	1		40.0	0.50	5.00
3	Guscio fond.	3	4	63	62	1		40.0	0.50	5.00
4	Guscio fond.	4	5	64	63	1		40.0	0.50	5.00
5	Guscio fond.	5	6	65	64	1		40.0	0.50	5.00
6	Guscio fond.	6	7	66	65	1		40.0	0.50	5.00
7	Guscio fond.	7	8	67	66	1		40.0	0.50	5.00
8	Guscio fond.	8	9	68	67	1		40.0	0.50	5.00
9	Guscio fond.	9	10	69	68	1		40.0	0.50	5.00
10	Guscio fond.	10	11	70	69	1		40.0	0.50	5.00
11	Guscio fond.	11	12	71	70	1		40.0	0.50	5.00
12	Guscio fond.	12	13	72	71	1		40.0	0.50	5.00
13	Guscio fond.	13	14	73	72	1		40.0	0.50	5.00
14	Guscio fond.	14	15	74	73	1		40.0	0.50	5.00
15	Guscio fond.	15	16	75	74	1		40.0	0.50	5.00

16	Guscio fond.	16	17	76	75	1	40.0	0.50	5.00
17	Guscio fond.	17	18	77	76	1	40.0	0.50	5.00
18	Guscio fond.	18	19	78	77	1	40.0	0.50	5.00
19	Guscio fond.	19	20	79	78	1	40.0	0.50	5.00
20	Guscio fond.	20	21	80	79	1	40.0	0.50	5.00
21	Guscio fond.	21	22	81	80	1	40.0	0.50	5.00
22	Guscio fond.	22	23	82	81	1	40.0	0.50	5.00
23	Guscio fond.	23	24	83	82	1	40.0	0.50	5.00
24	Guscio fond.	24	25	84	83	1	40.0	0.50	5.00
25	Guscio fond.	25	26	85	84	1	40.0	0.50	5.00
26	Guscio fond.	26	27	86	85	1	40.0	0.50	5.00
27	Guscio fond.	27	28	87	86	1	40.0	0.50	5.00
28	Guscio fond.	28	29	88	87	1	40.0	0.50	5.00
29	Guscio fond.	29	30	89	88	1	40.0	0.50	5.00
30	Guscio fond.	30	31	90	89	1	40.0	0.50	5.00
31	Guscio fond.	31	32	91	90	1	40.0	0.50	5.00
32	Guscio fond.	32	33	92	91	1	40.0	0.50	5.00
33	Guscio fond.	33	34	93	92	1	40.0	0.50	5.00
34	Guscio fond.	34	35	94	93	1	40.0	0.50	5.00
35	Guscio fond.	35	36	95	94	1	40.0	0.50	5.00
36	Guscio fond.	36	37	96	95	1	40.0	0.50	5.00
37	Guscio fond.	37	38	97	96	1	40.0	0.50	5.00
38	Guscio fond.	38	39	98	97	1	40.0	0.50	5.00
39	Guscio fond.	39	40	99	98	1	40.0	0.50	5.00
40	Guscio fond.	40	41	100	99	1	40.0	0.50	5.00
41	Guscio fond.	41	42	101	100	1	40.0	0.50	5.00
42	Guscio fond.	42	43	102	101	1	40.0	0.50	5.00
43	Guscio fond.	43	44	103	102	1	40.0	0.50	5.00
44	Guscio fond.	44	45	104	103	1	40.0	0.50	5.00
45	Guscio fond.	45	46	105	104	1	40.0	0.50	5.00
46	Guscio fond.	46	47	106	105	1	40.0	0.50	5.00
47	Guscio fond.	47	48	107	106	1	40.0	0.50	5.00
48	Guscio fond.	48	49	108	107	1	40.0	0.50	5.00
49	Guscio fond.	49	50	109	108	1	40.0	0.50	5.00
50	Guscio fond.	50	51	110	109	1	40.0	0.50	5.00
51	Guscio fond.	51	52	111	110	1	40.0	0.50	5.00
52	Guscio fond.	52	53	112	111	1	40.0	0.50	5.00
53	Guscio fond.	53	54	113	112	1	40.0	0.50	5.00
54	Guscio fond.	54	55	114	113	1	40.0	0.50	5.00
55	Guscio fond.	55	56	115	114	1	40.0	0.50	5.00
56	Guscio fond.	56	57	116	115	1	40.0	0.50	5.00
57	Guscio fond.	57	58	117	116	1	40.0	0.50	5.00
58	Guscio fond.	58	59	118	117	1	40.0	0.50	5.00
59	Guscio fond.	60	61	120	119	1	40.0	0.50	5.00
60	Guscio fond.	61	62	121	120	1	40.0	0.50	5.00
61	Guscio fond.	62	63	122	121	1	40.0	0.50	5.00
62	Guscio fond.	63	64	123	122	1	40.0	0.50	5.00
63	Guscio fond.	64	65	124	123	1	40.0	0.50	5.00
64	Guscio fond.	65	66	125	124	1	40.0	0.50	5.00
65	Guscio fond.	66	67	126	125	1	40.0	0.50	5.00
66	Guscio fond.	67	68	127	126	1	40.0	0.50	5.00
67	Guscio fond.	68	69	128	127	1	40.0	0.50	5.00
68	Guscio fond.	69	70	129	128	1	40.0	0.50	5.00
69	Guscio fond.	70	71	130	129	1	40.0	0.50	5.00
70	Guscio fond.	71	72	131	130	1	40.0	0.50	5.00
71	Guscio fond.	72	73	132	131	1	40.0	0.50	5.00
72	Guscio fond.	73	74	133	132	1	40.0	0.50	5.00
73	Guscio fond.	74	75	134	133	1	40.0	0.50	5.00
74	Guscio fond.	75	76	135	134	1	40.0	0.50	5.00
75	Guscio fond.	76	77	136	135	1	40.0	0.50	5.00
76	Guscio fond.	77	78	137	136	1	40.0	0.50	5.00
77	Guscio fond.	78	79	138	137	1	40.0	0.50	5.00
78	Guscio fond.	79	80	139	138	1	40.0	0.50	5.00
79	Guscio fond.	80	81	140	139	1	40.0	0.50	5.00
80	Guscio fond.	81	82	141	140	1	40.0	0.50	5.00
81	Guscio fond.	82	83	142	141	1	40.0	0.50	5.00
82	Guscio fond.	83	84	143	142	1	40.0	0.50	5.00
83	Guscio fond.	84	85	144	143	1	40.0	0.50	5.00
84	Guscio fond.	85	86	145	144	1	40.0	0.50	5.00
85	Guscio fond.	86	87	146	145	1	40.0	0.50	5.00
86	Guscio fond.	87	88	147	146	1	40.0	0.50	5.00
87	Guscio fond.	88	89	148	147	1	40.0	0.50	5.00
88	Guscio fond.	89	90	149	148	1	40.0	0.50	5.00
89	Guscio fond.	90	91	150	149	1	40.0	0.50	5.00
90	Guscio fond.	91	92	151	150	1	40.0	0.50	5.00
91	Guscio fond.	92	93	152	151	1	40.0	0.50	5.00
92	Guscio fond.	93	94	153	152	1	40.0	0.50	5.00
93	Guscio fond.	94	95	154	153	1	40.0	0.50	5.00
94	Guscio fond.	95	96	155	154	1	40.0	0.50	5.00

95	Guscio fond.	96	97	156	155	1	40.0	0.50	5.00
96	Guscio fond.	97	98	157	156	1	40.0	0.50	5.00
97	Guscio fond.	98	99	158	157	1	40.0	0.50	5.00
98	Guscio fond.	99	100	159	158	1	40.0	0.50	5.00
99	Guscio fond.	100	101	160	159	1	40.0	0.50	5.00
100	Guscio fond.	101	102	161	160	1	40.0	0.50	5.00
101	Guscio fond.	102	103	162	161	1	40.0	0.50	5.00
102	Guscio fond.	103	104	163	162	1	40.0	0.50	5.00
103	Guscio fond.	104	105	164	163	1	40.0	0.50	5.00
104	Guscio fond.	105	106	165	164	1	40.0	0.50	5.00
105	Guscio fond.	106	107	166	165	1	40.0	0.50	5.00
106	Guscio fond.	107	108	167	166	1	40.0	0.50	5.00
107	Guscio fond.	108	109	168	167	1	40.0	0.50	5.00
108	Guscio fond.	109	110	169	168	1	40.0	0.50	5.00
109	Guscio fond.	110	111	170	169	1	40.0	0.50	5.00
110	Guscio fond.	111	112	171	170	1	40.0	0.50	5.00
111	Guscio fond.	112	113	172	171	1	40.0	0.50	5.00
112	Guscio fond.	113	114	173	172	1	40.0	0.50	5.00
113	Guscio fond.	114	115	174	173	1	40.0	0.50	5.00
114	Guscio fond.	115	116	175	174	1	40.0	0.50	5.00
115	Guscio fond.	116	117	176	175	1	40.0	0.50	5.00
116	Guscio fond.	117	118	177	176	1	40.0	0.50	5.00
117	Guscio fond.	119	120	179	178	1	40.0	0.50	5.00
118	Guscio fond.	120	121	180	179	1	40.0	0.50	5.00
119	Guscio fond.	121	122	181	180	1	40.0	0.50	5.00
120	Guscio fond.	122	123	182	181	1	40.0	0.50	5.00
121	Guscio fond.	123	124	183	182	1	40.0	0.50	5.00
122	Guscio fond.	124	125	184	183	1	40.0	0.50	5.00
123	Guscio fond.	125	126	185	184	1	40.0	0.50	5.00
124	Guscio fond.	126	127	186	185	1	40.0	0.50	5.00
125	Guscio fond.	127	128	187	186	1	40.0	0.50	5.00
126	Guscio fond.	128	129	188	187	1	40.0	0.50	5.00
127	Guscio fond.	129	130	189	188	1	40.0	0.50	5.00
128	Guscio fond.	130	131	190	189	1	40.0	0.50	5.00
129	Guscio fond.	131	132	191	190	1	40.0	0.50	5.00
130	Guscio fond.	132	133	192	191	1	40.0	0.50	5.00
131	Guscio fond.	133	134	193	192	1	40.0	0.50	5.00
132	Guscio fond.	134	135	194	193	1	40.0	0.50	5.00
133	Guscio fond.	135	136	195	194	1	40.0	0.50	5.00
134	Guscio fond.	136	137	196	195	1	40.0	0.50	5.00
135	Guscio fond.	137	138	197	196	1	40.0	0.50	5.00
136	Guscio fond.	138	139	198	197	1	40.0	0.50	5.00
137	Guscio fond.	139	140	199	198	1	40.0	0.50	5.00
138	Guscio fond.	140	141	200	199	1	40.0	0.50	5.00
139	Guscio fond.	141	142	201	200	1	40.0	0.50	5.00
140	Guscio fond.	142	143	202	201	1	40.0	0.50	5.00
141	Guscio fond.	143	144	203	202	1	40.0	0.50	5.00
142	Guscio fond.	144	145	204	203	1	40.0	0.50	5.00
143	Guscio fond.	145	146	205	204	1	40.0	0.50	5.00
144	Guscio fond.	146	147	206	205	1	40.0	0.50	5.00
145	Guscio fond.	147	148	207	206	1	40.0	0.50	5.00
146	Guscio fond.	148	149	208	207	1	40.0	0.50	5.00
147	Guscio fond.	149	150	209	208	1	40.0	0.50	5.00
148	Guscio fond.	150	151	210	209	1	40.0	0.50	5.00
149	Guscio fond.	151	152	211	210	1	40.0	0.50	5.00
150	Guscio fond.	152	153	212	211	1	40.0	0.50	5.00
151	Guscio fond.	153	154	213	212	1	40.0	0.50	5.00
152	Guscio fond.	154	155	214	213	1	40.0	0.50	5.00
153	Guscio fond.	155	156	215	214	1	40.0	0.50	5.00
154	Guscio fond.	156	157	216	215	1	40.0	0.50	5.00
155	Guscio fond.	157	158	217	216	1	40.0	0.50	5.00
156	Guscio fond.	158	159	218	217	1	40.0	0.50	5.00
157	Guscio fond.	159	160	219	218	1	40.0	0.50	5.00
158	Guscio fond.	160	161	220	219	1	40.0	0.50	5.00
159	Guscio fond.	161	162	221	220	1	40.0	0.50	5.00
160	Guscio fond.	162	163	222	221	1	40.0	0.50	5.00
161	Guscio fond.	163	164	223	222	1	40.0	0.50	5.00
162	Guscio fond.	164	165	224	223	1	40.0	0.50	5.00
163	Guscio fond.	165	166	225	224	1	40.0	0.50	5.00
164	Guscio fond.	166	167	226	225	1	40.0	0.50	5.00
165	Guscio fond.	167	168	227	226	1	40.0	0.50	5.00
166	Guscio fond.	168	169	228	227	1	40.0	0.50	5.00
167	Guscio fond.	169	170	229	228	1	40.0	0.50	5.00
168	Guscio fond.	170	171	230	229	1	40.0	0.50	5.00
169	Guscio fond.	171	172	231	230	1	40.0	0.50	5.00
170	Guscio fond.	172	173	232	231	1	40.0	0.50	5.00
171	Guscio fond.	173	174	233	232	1	40.0	0.50	5.00
172	Guscio fond.	174	175	234	233	1	40.0	0.50	5.00
173	Guscio fond.	175	176	235	234	1	40.0	0.50	5.00

174	Guscio fond.	176	177	236	235	1	40.0	0.50	5.00
175	Guscio fond.	178	179	238	237	1	40.0	0.50	5.00
176	Guscio fond.	179	180	239	238	1	40.0	0.50	5.00
177	Guscio fond.	180	181	240	239	1	40.0	0.50	5.00
178	Guscio fond.	181	182	241	240	1	40.0	0.50	5.00
179	Guscio fond.	182	183	242	241	1	40.0	0.50	5.00
180	Guscio fond.	183	184	243	242	1	40.0	0.50	5.00
181	Guscio fond.	184	185	244	243	1	40.0	0.50	5.00
182	Guscio fond.	185	186	245	244	1	40.0	0.50	5.00
183	Guscio fond.	186	187	246	245	1	40.0	0.50	5.00
184	Guscio fond.	187	188	247	246	1	40.0	0.50	5.00
185	Guscio fond.	188	189	248	247	1	40.0	0.50	5.00
186	Guscio fond.	189	190	249	248	1	40.0	0.50	5.00
187	Guscio fond.	190	191	250	249	1	40.0	0.50	5.00
188	Guscio fond.	191	192	251	250	1	40.0	0.50	5.00
189	Guscio fond.	192	193	252	251	1	40.0	0.50	5.00
190	Guscio fond.	193	194	253	252	1	40.0	0.50	5.00
191	Guscio fond.	194	195	254	253	1	40.0	0.50	5.00
192	Guscio fond.	195	196	255	254	1	40.0	0.50	5.00
193	Guscio fond.	196	197	256	255	1	40.0	0.50	5.00
194	Guscio fond.	197	198	257	256	1	40.0	0.50	5.00
195	Guscio fond.	198	199	258	257	1	40.0	0.50	5.00
196	Guscio fond.	199	200	259	258	1	40.0	0.50	5.00
197	Guscio fond.	200	201	260	259	1	40.0	0.50	5.00
198	Guscio fond.	201	202	261	260	1	40.0	0.50	5.00
199	Guscio fond.	202	203	262	261	1	40.0	0.50	5.00
200	Guscio fond.	203	204	263	262	1	40.0	0.50	5.00
201	Guscio fond.	204	205	264	263	1	40.0	0.50	5.00
202	Guscio fond.	205	206	265	264	1	40.0	0.50	5.00
203	Guscio fond.	206	207	266	265	1	40.0	0.50	5.00
204	Guscio fond.	207	208	267	266	1	40.0	0.50	5.00
205	Guscio fond.	208	209	268	267	1	40.0	0.50	5.00
206	Guscio fond.	209	210	269	268	1	40.0	0.50	5.00
207	Guscio fond.	210	211	270	269	1	40.0	0.50	5.00
208	Guscio fond.	211	212	271	270	1	40.0	0.50	5.00
209	Guscio fond.	212	213	272	271	1	40.0	0.50	5.00
210	Guscio fond.	213	214	273	272	1	40.0	0.50	5.00
211	Guscio fond.	214	215	274	273	1	40.0	0.50	5.00
212	Guscio fond.	215	216	275	274	1	40.0	0.50	5.00
213	Guscio fond.	216	217	276	275	1	40.0	0.50	5.00
214	Guscio fond.	217	218	277	276	1	40.0	0.50	5.00
215	Guscio fond.	218	219	278	277	1	40.0	0.50	5.00
216	Guscio fond.	219	220	279	278	1	40.0	0.50	5.00
217	Guscio fond.	220	221	280	279	1	40.0	0.50	5.00
218	Guscio fond.	221	222	281	280	1	40.0	0.50	5.00
219	Guscio fond.	222	223	282	281	1	40.0	0.50	5.00
220	Guscio fond.	223	224	283	282	1	40.0	0.50	5.00
221	Guscio fond.	224	225	284	283	1	40.0	0.50	5.00
222	Guscio fond.	225	226	285	284	1	40.0	0.50	5.00
223	Guscio fond.	226	227	286	285	1	40.0	0.50	5.00
224	Guscio fond.	227	228	287	286	1	40.0	0.50	5.00
225	Guscio fond.	228	229	288	287	1	40.0	0.50	5.00
226	Guscio fond.	229	230	289	288	1	40.0	0.50	5.00
227	Guscio fond.	230	231	290	289	1	40.0	0.50	5.00
228	Guscio fond.	231	232	291	290	1	40.0	0.50	5.00
229	Guscio fond.	232	233	292	291	1	40.0	0.50	5.00
230	Guscio fond.	233	234	293	292	1	40.0	0.50	5.00
231	Guscio fond.	234	235	294	293	1	40.0	0.50	5.00
232	Guscio fond.	235	236	295	294	1	40.0	0.50	5.00
233	Guscio fond.	237	238	297	296	1	40.0	0.50	5.00
234	Guscio fond.	238	239	298	297	1	40.0	0.50	5.00
235	Guscio fond.	239	240	299	298	1	40.0	0.50	5.00
236	Guscio fond.	240	241	300	299	1	40.0	0.50	5.00
237	Guscio fond.	241	242	301	300	1	40.0	0.50	5.00
238	Guscio fond.	242	243	302	301	1	40.0	0.50	5.00
239	Guscio fond.	243	244	303	302	1	40.0	0.50	5.00
240	Guscio fond.	244	245	304	303	1	40.0	0.50	5.00
241	Guscio fond.	245	246	305	304	1	40.0	0.50	5.00
242	Guscio fond.	246	247	306	305	1	40.0	0.50	5.00
243	Guscio fond.	247	248	307	306	1	40.0	0.50	5.00
244	Guscio fond.	248	249	308	307	1	40.0	0.50	5.00
245	Guscio fond.	249	250	309	308	1	40.0	0.50	5.00
246	Guscio fond.	250	251	310	309	1	40.0	0.50	5.00
247	Guscio fond.	251	252	311	310	1	40.0	0.50	5.00
248	Guscio fond.	252	253	312	311	1	40.0	0.50	5.00
249	Guscio fond.	253	254	313	312	1	40.0	0.50	5.00
250	Guscio fond.	254	255	314	313	1	40.0	0.50	5.00
251	Guscio fond.	255	256	315	314	1	40.0	0.50	5.00
252	Guscio fond.	256	257	316	315	1	40.0	0.50	5.00

253	Guscio fond.	257	258	317	316	1	40.0	0.50	5.00
254	Guscio fond.	258	259	318	317	1	40.0	0.50	5.00
255	Guscio fond.	259	260	319	318	1	40.0	0.50	5.00
256	Guscio fond.	260	261	320	319	1	40.0	0.50	5.00
257	Guscio fond.	261	262	321	320	1	40.0	0.50	5.00
258	Guscio fond.	262	263	322	321	1	40.0	0.50	5.00
259	Guscio fond.	263	264	323	322	1	40.0	0.50	5.00
260	Guscio fond.	264	265	324	323	1	40.0	0.50	5.00
261	Guscio fond.	265	266	325	324	1	40.0	0.50	5.00
262	Guscio fond.	266	267	326	325	1	40.0	0.50	5.00
263	Guscio fond.	267	268	327	326	1	40.0	0.50	5.00
264	Guscio fond.	268	269	328	327	1	40.0	0.50	5.00
265	Guscio fond.	269	270	329	328	1	40.0	0.50	5.00
266	Guscio fond.	270	271	330	329	1	40.0	0.50	5.00
267	Guscio fond.	271	272	331	330	1	40.0	0.50	5.00
268	Guscio fond.	272	273	332	331	1	40.0	0.50	5.00
269	Guscio fond.	273	274	333	332	1	40.0	0.50	5.00
270	Guscio fond.	274	275	334	333	1	40.0	0.50	5.00
271	Guscio fond.	275	276	335	334	1	40.0	0.50	5.00
272	Guscio fond.	276	277	336	335	1	40.0	0.50	5.00
273	Guscio fond.	277	278	337	336	1	40.0	0.50	5.00
274	Guscio fond.	278	279	338	337	1	40.0	0.50	5.00
275	Guscio fond.	279	280	339	338	1	40.0	0.50	5.00
276	Guscio fond.	280	281	340	339	1	40.0	0.50	5.00
277	Guscio fond.	281	282	341	340	1	40.0	0.50	5.00
278	Guscio fond.	282	283	342	341	1	40.0	0.50	5.00
279	Guscio fond.	283	284	343	342	1	40.0	0.50	5.00
280	Guscio fond.	284	285	344	343	1	40.0	0.50	5.00
281	Guscio fond.	285	286	345	344	1	40.0	0.50	5.00
282	Guscio fond.	286	287	346	345	1	40.0	0.50	5.00
283	Guscio fond.	287	288	347	346	1	40.0	0.50	5.00
284	Guscio fond.	288	289	348	347	1	40.0	0.50	5.00
285	Guscio fond.	289	290	349	348	1	40.0	0.50	5.00
286	Guscio fond.	290	291	350	349	1	40.0	0.50	5.00
287	Guscio fond.	291	292	351	350	1	40.0	0.50	5.00
288	Guscio fond.	292	293	352	351	1	40.0	0.50	5.00
289	Guscio fond.	293	294	353	352	1	40.0	0.50	5.00
290	Guscio fond.	294	295	354	353	1	40.0	0.50	5.00
291	Guscio fond.	296	297	356	355	1	40.0	0.50	5.00
292	Guscio fond.	297	298	357	356	1	40.0	0.50	5.00
293	Guscio fond.	298	299	358	357	1	40.0	0.50	5.00
294	Guscio fond.	299	300	359	358	1	40.0	0.50	5.00
295	Guscio fond.	300	301	360	359	1	40.0	0.50	5.00
296	Guscio fond.	301	302	361	360	1	40.0	0.50	5.00
297	Guscio fond.	302	303	362	361	1	40.0	0.50	5.00
298	Guscio fond.	303	304	363	362	1	40.0	0.50	5.00
299	Guscio fond.	304	305	364	363	1	40.0	0.50	5.00
300	Guscio fond.	305	306	365	364	1	40.0	0.50	5.00
301	Guscio fond.	306	307	366	365	1	40.0	0.50	5.00
302	Guscio fond.	307	308	367	366	1	40.0	0.50	5.00
303	Guscio fond.	308	309	368	367	1	40.0	0.50	5.00
304	Guscio fond.	309	310	369	368	1	40.0	0.50	5.00
305	Guscio fond.	310	311	370	369	1	40.0	0.50	5.00
306	Guscio fond.	311	312	371	370	1	40.0	0.50	5.00
307	Guscio fond.	312	313	372	371	1	40.0	0.50	5.00
308	Guscio fond.	313	314	373	372	1	40.0	0.50	5.00
309	Guscio fond.	314	315	374	373	1	40.0	0.50	5.00
310	Guscio fond.	315	316	375	374	1	40.0	0.50	5.00
311	Guscio fond.	316	317	376	375	1	40.0	0.50	5.00
312	Guscio fond.	317	318	377	376	1	40.0	0.50	5.00
313	Guscio fond.	318	319	378	377	1	40.0	0.50	5.00
314	Guscio fond.	319	320	379	378	1	40.0	0.50	5.00
315	Guscio fond.	320	321	380	379	1	40.0	0.50	5.00
316	Guscio fond.	321	322	381	380	1	40.0	0.50	5.00
317	Guscio fond.	322	323	382	381	1	40.0	0.50	5.00
318	Guscio fond.	323	324	383	382	1	40.0	0.50	5.00
319	Guscio fond.	324	325	384	383	1	40.0	0.50	5.00
320	Guscio fond.	325	326	385	384	1	40.0	0.50	5.00
321	Guscio fond.	326	327	386	385	1	40.0	0.50	5.00
322	Guscio fond.	327	328	387	386	1	40.0	0.50	5.00
323	Guscio fond.	328	329	388	387	1	40.0	0.50	5.00
324	Guscio fond.	329	330	389	388	1	40.0	0.50	5.00
325	Guscio fond.	330	331	390	389	1	40.0	0.50	5.00
326	Guscio fond.	331	332	391	390	1	40.0	0.50	5.00
327	Guscio fond.	332	333	392	391	1	40.0	0.50	5.00
328	Guscio fond.	333	334	393	392	1	40.0	0.50	5.00
329	Guscio fond.	334	335	394	393	1	40.0	0.50	5.00
330	Guscio fond.	335	336	395	394	1	40.0	0.50	5.00
331	Guscio fond.	336	337	396	395	1	40.0	0.50	5.00

332	Guscio fond.	337	338	397	396	1	40.0	0.50	5.00
333	Guscio fond.	338	339	398	397	1	40.0	0.50	5.00
334	Guscio fond.	339	340	399	398	1	40.0	0.50	5.00
335	Guscio fond.	340	341	400	399	1	40.0	0.50	5.00
336	Guscio fond.	341	342	401	400	1	40.0	0.50	5.00
337	Guscio fond.	342	343	402	401	1	40.0	0.50	5.00
338	Guscio fond.	343	344	403	402	1	40.0	0.50	5.00
339	Guscio fond.	344	345	404	403	1	40.0	0.50	5.00
340	Guscio fond.	345	346	405	404	1	40.0	0.50	5.00
341	Guscio fond.	346	347	406	405	1	40.0	0.50	5.00
342	Guscio fond.	347	348	407	406	1	40.0	0.50	5.00
343	Guscio fond.	348	349	408	407	1	40.0	0.50	5.00
344	Guscio fond.	349	350	409	408	1	40.0	0.50	5.00
345	Guscio fond.	350	351	410	409	1	40.0	0.50	5.00
346	Guscio fond.	351	352	411	410	1	40.0	0.50	5.00
347	Guscio fond.	352	353	412	411	1	40.0	0.50	5.00
348	Guscio fond.	353	354	413	412	1	40.0	0.50	5.00
349	Guscio fond.	355	356	415	414	1	40.0	0.50	5.00
350	Guscio fond.	356	357	416	415	1	40.0	0.50	5.00
351	Guscio fond.	357	358	417	416	1	40.0	0.50	5.00
352	Guscio fond.	358	359	418	417	1	40.0	0.50	5.00
353	Guscio fond.	359	360	419	418	1	40.0	0.50	5.00
354	Guscio fond.	360	361	420	419	1	40.0	0.50	5.00
355	Guscio fond.	361	362	421	420	1	40.0	0.50	5.00
356	Guscio fond.	362	363	422	421	1	40.0	0.50	5.00
357	Guscio fond.	363	364	423	422	1	40.0	0.50	5.00
358	Guscio fond.	364	365	424	423	1	40.0	0.50	5.00
359	Guscio fond.	365	366	425	424	1	40.0	0.50	5.00
360	Guscio fond.	366	367	426	425	1	40.0	0.50	5.00
361	Guscio fond.	367	368	427	426	1	40.0	0.50	5.00
362	Guscio fond.	368	369	428	427	1	40.0	0.50	5.00
363	Guscio fond.	369	370	429	428	1	40.0	0.50	5.00
364	Guscio fond.	370	371	430	429	1	40.0	0.50	5.00
365	Guscio fond.	371	372	431	430	1	40.0	0.50	5.00
366	Guscio fond.	372	373	432	431	1	40.0	0.50	5.00
367	Guscio fond.	373	374	433	432	1	40.0	0.50	5.00
368	Guscio fond.	374	375	434	433	1	40.0	0.50	5.00
369	Guscio fond.	375	376	435	434	1	40.0	0.50	5.00
370	Guscio fond.	376	377	436	435	1	40.0	0.50	5.00
371	Guscio fond.	377	378	437	436	1	40.0	0.50	5.00
372	Guscio fond.	378	379	438	437	1	40.0	0.50	5.00
373	Guscio fond.	379	380	439	438	1	40.0	0.50	5.00
374	Guscio fond.	380	381	440	439	1	40.0	0.50	5.00
375	Guscio fond.	381	382	441	440	1	40.0	0.50	5.00
376	Guscio fond.	382	383	442	441	1	40.0	0.50	5.00
377	Guscio fond.	383	384	443	442	1	40.0	0.50	5.00
378	Guscio fond.	384	385	444	443	1	40.0	0.50	5.00
379	Guscio fond.	385	386	445	444	1	40.0	0.50	5.00
380	Guscio fond.	386	387	446	445	1	40.0	0.50	5.00
381	Guscio fond.	387	388	447	446	1	40.0	0.50	5.00
382	Guscio fond.	388	389	448	447	1	40.0	0.50	5.00
383	Guscio fond.	389	390	449	448	1	40.0	0.50	5.00
384	Guscio fond.	390	391	450	449	1	40.0	0.50	5.00
385	Guscio fond.	391	392	451	450	1	40.0	0.50	5.00
386	Guscio fond.	392	393	452	451	1	40.0	0.50	5.00
387	Guscio fond.	393	394	453	452	1	40.0	0.50	5.00
388	Guscio fond.	394	395	454	453	1	40.0	0.50	5.00
389	Guscio fond.	395	396	455	454	1	40.0	0.50	5.00
390	Guscio fond.	396	397	456	455	1	40.0	0.50	5.00
391	Guscio fond.	397	398	457	456	1	40.0	0.50	5.00
392	Guscio fond.	398	399	458	457	1	40.0	0.50	5.00
393	Guscio fond.	399	400	459	458	1	40.0	0.50	5.00
394	Guscio fond.	400	401	460	459	1	40.0	0.50	5.00
395	Guscio fond.	401	402	461	460	1	40.0	0.50	5.00
396	Guscio fond.	402	403	462	461	1	40.0	0.50	5.00
397	Guscio fond.	403	404	463	462	1	40.0	0.50	5.00
398	Guscio fond.	404	405	464	463	1	40.0	0.50	5.00
399	Guscio fond.	405	406	465	464	1	40.0	0.50	5.00
400	Guscio fond.	406	407	466	465	1	40.0	0.50	5.00
401	Guscio fond.	407	408	467	466	1	40.0	0.50	5.00
402	Guscio fond.	408	409	468	467	1	40.0	0.50	5.00
403	Guscio fond.	409	410	469	468	1	40.0	0.50	5.00
404	Guscio fond.	410	411	470	469	1	40.0	0.50	5.00
405	Guscio fond.	411	412	471	470	1	40.0	0.50	5.00
406	Guscio fond.	412	413	472	471	1	40.0	0.50	5.00
407	Guscio fond.	414	415	474	473	1	40.0	0.50	5.00
408	Guscio fond.	415	416	475	474	1	40.0	0.50	5.00
409	Guscio fond.	416	417	476	475	1	40.0	0.50	5.00
410	Guscio fond.	417	418	477	476	1	40.0	0.50	5.00

411	Guscio fond.	418	419	478	477	1	40.0	0.50	5.00
412	Guscio fond.	419	420	479	478	1	40.0	0.50	5.00
413	Guscio fond.	420	421	480	479	1	40.0	0.50	5.00
414	Guscio fond.	421	422	481	480	1	40.0	0.50	5.00
415	Guscio fond.	422	423	482	481	1	40.0	0.50	5.00
416	Guscio fond.	423	424	483	482	1	40.0	0.50	5.00
417	Guscio fond.	424	425	484	483	1	40.0	0.50	5.00
418	Guscio fond.	425	426	485	484	1	40.0	0.50	5.00
419	Guscio fond.	426	427	486	485	1	40.0	0.50	5.00
420	Guscio fond.	427	428	487	486	1	40.0	0.50	5.00
421	Guscio fond.	428	429	488	487	1	40.0	0.50	5.00
422	Guscio fond.	429	430	489	488	1	40.0	0.50	5.00
423	Guscio fond.	430	431	490	489	1	40.0	0.50	5.00
424	Guscio fond.	431	432	491	490	1	40.0	0.50	5.00
425	Guscio fond.	432	433	492	491	1	40.0	0.50	5.00
426	Guscio fond.	433	434	493	492	1	40.0	0.50	5.00
427	Guscio fond.	434	435	494	493	1	40.0	0.50	5.00
428	Guscio fond.	435	436	495	494	1	40.0	0.50	5.00
429	Guscio fond.	436	437	496	495	1	40.0	0.50	5.00
430	Guscio fond.	437	438	497	496	1	40.0	0.50	5.00
431	Guscio fond.	438	439	498	497	1	40.0	0.50	5.00
432	Guscio fond.	439	440	499	498	1	40.0	0.50	5.00
433	Guscio fond.	440	441	500	499	1	40.0	0.50	5.00
434	Guscio fond.	441	442	501	500	1	40.0	0.50	5.00
435	Guscio fond.	442	443	502	501	1	40.0	0.50	5.00
436	Guscio fond.	443	444	503	502	1	40.0	0.50	5.00
437	Guscio fond.	444	445	504	503	1	40.0	0.50	5.00
438	Guscio fond.	445	446	505	504	1	40.0	0.50	5.00
439	Guscio fond.	446	447	506	505	1	40.0	0.50	5.00
440	Guscio fond.	447	448	507	506	1	40.0	0.50	5.00
441	Guscio fond.	448	449	508	507	1	40.0	0.50	5.00
442	Guscio fond.	449	450	509	508	1	40.0	0.50	5.00
443	Guscio fond.	450	451	510	509	1	40.0	0.50	5.00
444	Guscio fond.	451	452	511	510	1	40.0	0.50	5.00
445	Guscio fond.	452	453	512	511	1	40.0	0.50	5.00
446	Guscio fond.	453	454	513	512	1	40.0	0.50	5.00
447	Guscio fond.	454	455	514	513	1	40.0	0.50	5.00
448	Guscio fond.	455	456	515	514	1	40.0	0.50	5.00
449	Guscio fond.	456	457	516	515	1	40.0	0.50	5.00
450	Guscio fond.	457	458	517	516	1	40.0	0.50	5.00
451	Guscio fond.	458	459	518	517	1	40.0	0.50	5.00
452	Guscio fond.	459	460	519	518	1	40.0	0.50	5.00
453	Guscio fond.	460	461	520	519	1	40.0	0.50	5.00
454	Guscio fond.	461	462	521	520	1	40.0	0.50	5.00
455	Guscio fond.	462	463	522	521	1	40.0	0.50	5.00
456	Guscio fond.	463	464	523	522	1	40.0	0.50	5.00
457	Guscio fond.	464	465	524	523	1	40.0	0.50	5.00
458	Guscio fond.	465	466	525	524	1	40.0	0.50	5.00
459	Guscio fond.	466	467	526	525	1	40.0	0.50	5.00
460	Guscio fond.	467	468	527	526	1	40.0	0.50	5.00
461	Guscio fond.	468	469	528	527	1	40.0	0.50	5.00
462	Guscio fond.	469	470	529	528	1	40.0	0.50	5.00
463	Guscio fond.	470	471	530	529	1	40.0	0.50	5.00
464	Guscio fond.	471	472	531	530	1	40.0	0.50	5.00
465	Guscio fond.	473	474	533	532	1	40.0	0.50	5.00
466	Guscio fond.	474	475	534	533	1	40.0	0.50	5.00
467	Guscio fond.	475	476	535	534	1	40.0	0.50	5.00
468	Guscio fond.	476	477	536	535	1	40.0	0.50	5.00
469	Guscio fond.	477	478	537	536	1	40.0	0.50	5.00
470	Guscio fond.	478	479	538	537	1	40.0	0.50	5.00
471	Guscio fond.	479	480	539	538	1	40.0	0.50	5.00
472	Guscio fond.	480	481	540	539	1	40.0	0.50	5.00
473	Guscio fond.	481	482	541	540	1	40.0	0.50	5.00
474	Guscio fond.	482	483	542	541	1	40.0	0.50	5.00
475	Guscio fond.	483	484	543	542	1	40.0	0.50	5.00
476	Guscio fond.	484	485	544	543	1	40.0	0.50	5.00
477	Guscio fond.	485	486	545	544	1	40.0	0.50	5.00
478	Guscio fond.	486	487	546	545	1	40.0	0.50	5.00
479	Guscio fond.	487	488	547	546	1	40.0	0.50	5.00
480	Guscio fond.	488	489	548	547	1	40.0	0.50	5.00
481	Guscio fond.	489	490	549	548	1	40.0	0.50	5.00
482	Guscio fond.	490	491	550	549	1	40.0	0.50	5.00
483	Guscio fond.	491	492	551	550	1	40.0	0.50	5.00
484	Guscio fond.	492	493	552	551	1	40.0	0.50	5.00
485	Guscio fond.	493	494	553	552	1	40.0	0.50	5.00
486	Guscio fond.	494	495	554	553	1	40.0	0.50	5.00
487	Guscio fond.	495	496	555	554	1	40.0	0.50	5.00
488	Guscio fond.	496	497	556	555	1	40.0	0.50	5.00
489	Guscio fond.	497	498	557	556	1	40.0	0.50	5.00

490	Guscio fond.	498	499	558	557	1	40.0	0.50	5.00
491	Guscio fond.	499	500	559	558	1	40.0	0.50	5.00
492	Guscio fond.	500	501	560	559	1	40.0	0.50	5.00
493	Guscio fond.	501	502	561	560	1	40.0	0.50	5.00
494	Guscio fond.	502	503	562	561	1	40.0	0.50	5.00
495	Guscio fond.	503	504	563	562	1	40.0	0.50	5.00
496	Guscio fond.	504	505	564	563	1	40.0	0.50	5.00
497	Guscio fond.	505	506	565	564	1	40.0	0.50	5.00
498	Guscio fond.	506	507	566	565	1	40.0	0.50	5.00
499	Guscio fond.	507	508	567	566	1	40.0	0.50	5.00
500	Guscio fond.	508	509	568	567	1	40.0	0.50	5.00
501	Guscio fond.	509	510	569	568	1	40.0	0.50	5.00
502	Guscio fond.	510	511	570	569	1	40.0	0.50	5.00
503	Guscio fond.	511	512	571	570	1	40.0	0.50	5.00
504	Guscio fond.	512	513	572	571	1	40.0	0.50	5.00
505	Guscio fond.	513	514	573	572	1	40.0	0.50	5.00
506	Guscio fond.	514	515	574	573	1	40.0	0.50	5.00
507	Guscio fond.	515	516	575	574	1	40.0	0.50	5.00
508	Guscio fond.	516	517	576	575	1	40.0	0.50	5.00
509	Guscio fond.	517	518	577	576	1	40.0	0.50	5.00
510	Guscio fond.	518	519	578	577	1	40.0	0.50	5.00
511	Guscio fond.	519	520	579	578	1	40.0	0.50	5.00
512	Guscio fond.	520	521	580	579	1	40.0	0.50	5.00
513	Guscio fond.	521	522	581	580	1	40.0	0.50	5.00
514	Guscio fond.	522	523	582	581	1	40.0	0.50	5.00
515	Guscio fond.	523	524	583	582	1	40.0	0.50	5.00
516	Guscio fond.	524	525	584	583	1	40.0	0.50	5.00
517	Guscio fond.	525	526	585	584	1	40.0	0.50	5.00
518	Guscio fond.	526	527	586	585	1	40.0	0.50	5.00
519	Guscio fond.	527	528	587	586	1	40.0	0.50	5.00
520	Guscio fond.	528	529	588	587	1	40.0	0.50	5.00
521	Guscio fond.	529	530	589	588	1	40.0	0.50	5.00
522	Guscio fond.	530	531	590	589	1	40.0	0.50	5.00
523	Guscio fond.	532	533	592	591	1	40.0	0.50	5.00
524	Guscio fond.	533	534	593	592	1	40.0	0.50	5.00
525	Guscio fond.	534	535	594	593	1	40.0	0.50	5.00
526	Guscio fond.	535	536	595	594	1	40.0	0.50	5.00
527	Guscio fond.	536	537	596	595	1	40.0	0.50	5.00
528	Guscio fond.	537	538	597	596	1	40.0	0.50	5.00
529	Guscio fond.	538	539	598	597	1	40.0	0.50	5.00
530	Guscio fond.	539	540	599	598	1	40.0	0.50	5.00
531	Guscio fond.	540	541	600	599	1	40.0	0.50	5.00
532	Guscio fond.	541	542	601	600	1	40.0	0.50	5.00
533	Guscio fond.	542	543	602	601	1	40.0	0.50	5.00
534	Guscio fond.	543	544	603	602	1	40.0	0.50	5.00
535	Guscio fond.	544	545	604	603	1	40.0	0.50	5.00
536	Guscio fond.	545	546	605	604	1	40.0	0.50	5.00
537	Guscio fond.	546	547	606	605	1	40.0	0.50	5.00
538	Guscio fond.	547	548	607	606	1	40.0	0.50	5.00
539	Guscio fond.	548	549	608	607	1	40.0	0.50	5.00
540	Guscio fond.	549	550	609	608	1	40.0	0.50	5.00
541	Guscio fond.	550	551	610	609	1	40.0	0.50	5.00
542	Guscio fond.	551	552	611	610	1	40.0	0.50	5.00
543	Guscio fond.	552	553	612	611	1	40.0	0.50	5.00
544	Guscio fond.	553	554	613	612	1	40.0	0.50	5.00
545	Guscio fond.	554	555	614	613	1	40.0	0.50	5.00
546	Guscio fond.	555	556	615	614	1	40.0	0.50	5.00
547	Guscio fond.	556	557	616	615	1	40.0	0.50	5.00
548	Guscio fond.	557	558	617	616	1	40.0	0.50	5.00
549	Guscio fond.	558	559	618	617	1	40.0	0.50	5.00
550	Guscio fond.	559	560	619	618	1	40.0	0.50	5.00
551	Guscio fond.	560	561	620	619	1	40.0	0.50	5.00
552	Guscio fond.	561	562	621	620	1	40.0	0.50	5.00
553	Guscio fond.	562	563	622	621	1	40.0	0.50	5.00
554	Guscio fond.	563	564	623	622	1	40.0	0.50	5.00
555	Guscio fond.	564	565	624	623	1	40.0	0.50	5.00
556	Guscio fond.	565	566	625	624	1	40.0	0.50	5.00
557	Guscio fond.	566	567	626	625	1	40.0	0.50	5.00
558	Guscio fond.	567	568	627	626	1	40.0	0.50	5.00
559	Guscio fond.	568	569	628	627	1	40.0	0.50	5.00
560	Guscio fond.	569	570	629	628	1	40.0	0.50	5.00
561	Guscio fond.	570	571	630	629	1	40.0	0.50	5.00
562	Guscio fond.	571	572	631	630	1	40.0	0.50	5.00
563	Guscio fond.	572	573	632	631	1	40.0	0.50	5.00
564	Guscio fond.	573	574	633	632	1	40.0	0.50	5.00
565	Guscio fond.	574	575	634	633	1	40.0	0.50	5.00
566	Guscio fond.	575	576	635	634	1	40.0	0.50	5.00
567	Guscio fond.	576	577	636	635	1	40.0	0.50	5.00
568	Guscio fond.	577	578	637	636	1	40.0	0.50	5.00

569	Guscio fond.	578	579	638	637	1	40.0	0.50	5.00
570	Guscio fond.	579	580	639	638	1	40.0	0.50	5.00
571	Guscio fond.	580	581	640	639	1	40.0	0.50	5.00
572	Guscio fond.	581	582	641	640	1	40.0	0.50	5.00
573	Guscio fond.	582	583	642	641	1	40.0	0.50	5.00
574	Guscio fond.	583	584	643	642	1	40.0	0.50	5.00
575	Guscio fond.	584	585	644	643	1	40.0	0.50	5.00
576	Guscio fond.	585	586	645	644	1	40.0	0.50	5.00
577	Guscio fond.	586	587	646	645	1	40.0	0.50	5.00
578	Guscio fond.	587	588	647	646	1	40.0	0.50	5.00
579	Guscio fond.	588	589	648	647	1	40.0	0.50	5.00
580	Guscio fond.	589	590	649	648	1	40.0	0.50	5.00
581	Guscio fond.	591	592	651	650	1	40.0	0.50	5.00
582	Guscio fond.	592	593	652	651	1	40.0	0.50	5.00
583	Guscio fond.	593	594	653	652	1	40.0	0.50	5.00
584	Guscio fond.	594	595	654	653	1	40.0	0.50	5.00
585	Guscio fond.	595	596	655	654	1	40.0	0.50	5.00
586	Guscio fond.	596	597	656	655	1	40.0	0.50	5.00
587	Guscio fond.	597	598	657	656	1	40.0	0.50	5.00
588	Guscio fond.	598	599	658	657	1	40.0	0.50	5.00
589	Guscio fond.	599	600	659	658	1	40.0	0.50	5.00
590	Guscio fond.	600	601	660	659	1	40.0	0.50	5.00
591	Guscio fond.	601	602	661	660	1	40.0	0.50	5.00
592	Guscio fond.	602	603	662	661	1	40.0	0.50	5.00
593	Guscio fond.	603	604	663	662	1	40.0	0.50	5.00
594	Guscio fond.	604	605	664	663	1	40.0	0.50	5.00
595	Guscio fond.	605	606	665	664	1	40.0	0.50	5.00
596	Guscio fond.	606	607	666	665	1	40.0	0.50	5.00
597	Guscio fond.	607	608	667	666	1	40.0	0.50	5.00
598	Guscio fond.	608	609	668	667	1	40.0	0.50	5.00
599	Guscio fond.	609	610	669	668	1	40.0	0.50	5.00
600	Guscio fond.	610	611	670	669	1	40.0	0.50	5.00
601	Guscio fond.	611	612	671	670	1	40.0	0.50	5.00
602	Guscio fond.	612	613	672	671	1	40.0	0.50	5.00
603	Guscio fond.	613	614	673	672	1	40.0	0.50	5.00
604	Guscio fond.	614	615	674	673	1	40.0	0.50	5.00
605	Guscio fond.	615	616	675	674	1	40.0	0.50	5.00
606	Guscio fond.	616	617	676	675	1	40.0	0.50	5.00
607	Guscio fond.	617	618	677	676	1	40.0	0.50	5.00
608	Guscio fond.	618	619	678	677	1	40.0	0.50	5.00
609	Guscio fond.	619	620	679	678	1	40.0	0.50	5.00
610	Guscio fond.	620	621	680	679	1	40.0	0.50	5.00
611	Guscio fond.	621	622	681	680	1	40.0	0.50	5.00
612	Guscio fond.	622	623	682	681	1	40.0	0.50	5.00
613	Guscio fond.	623	624	683	682	1	40.0	0.50	5.00
614	Guscio fond.	624	625	684	683	1	40.0	0.50	5.00
615	Guscio fond.	625	626	685	684	1	40.0	0.50	5.00
616	Guscio fond.	626	627	686	685	1	40.0	0.50	5.00
617	Guscio fond.	627	628	687	686	1	40.0	0.50	5.00
618	Guscio fond.	628	629	688	687	1	40.0	0.50	5.00
619	Guscio fond.	629	630	689	688	1	40.0	0.50	5.00
620	Guscio fond.	630	631	690	689	1	40.0	0.50	5.00
621	Guscio fond.	631	632	691	690	1	40.0	0.50	5.00
622	Guscio fond.	632	633	692	691	1	40.0	0.50	5.00
623	Guscio fond.	633	634	693	692	1	40.0	0.50	5.00
624	Guscio fond.	634	635	694	693	1	40.0	0.50	5.00
625	Guscio fond.	635	636	695	694	1	40.0	0.50	5.00
626	Guscio fond.	636	637	696	695	1	40.0	0.50	5.00
627	Guscio fond.	637	638	697	696	1	40.0	0.50	5.00
628	Guscio fond.	638	639	698	697	1	40.0	0.50	5.00
629	Guscio fond.	639	640	699	698	1	40.0	0.50	5.00
630	Guscio fond.	640	641	700	699	1	40.0	0.50	5.00
631	Guscio fond.	641	642	701	700	1	40.0	0.50	5.00
632	Guscio fond.	642	643	702	701	1	40.0	0.50	5.00
633	Guscio fond.	643	644	703	702	1	40.0	0.50	5.00
634	Guscio fond.	644	645	704	703	1	40.0	0.50	5.00
635	Guscio fond.	645	646	705	704	1	40.0	0.50	5.00
636	Guscio fond.	646	647	706	705	1	40.0	0.50	5.00
637	Guscio fond.	647	648	707	706	1	40.0	0.50	5.00
638	Guscio fond.	648	649	708	707	1	40.0	0.50	5.00
639	Guscio fond.	650	651	710	709	1	40.0	0.50	5.00
640	Guscio fond.	651	652	711	710	1	40.0	0.50	5.00
641	Guscio fond.	652	653	712	711	1	40.0	0.50	5.00
642	Guscio fond.	653	654	713	712	1	40.0	0.50	5.00
643	Guscio fond.	654	655	714	713	1	40.0	0.50	5.00
644	Guscio fond.	655	656	715	714	1	40.0	0.50	5.00
645	Guscio fond.	656	657	716	715	1	40.0	0.50	5.00
646	Guscio fond.	657	658	717	716	1	40.0	0.50	5.00
647	Guscio fond.	658	659	718	717	1	40.0	0.50	5.00

648	Guscio fond.	659	660	719	718	1	40.0	0.50	5.00
649	Guscio fond.	660	661	720	719	1	40.0	0.50	5.00
650	Guscio fond.	661	662	721	720	1	40.0	0.50	5.00
651	Guscio fond.	662	663	722	721	1	40.0	0.50	5.00
652	Guscio fond.	663	664	723	722	1	40.0	0.50	5.00
653	Guscio fond.	664	665	724	723	1	40.0	0.50	5.00
654	Guscio fond.	665	666	725	724	1	40.0	0.50	5.00
655	Guscio fond.	666	667	726	725	1	40.0	0.50	5.00
656	Guscio fond.	667	668	727	726	1	40.0	0.50	5.00
657	Guscio fond.	668	669	728	727	1	40.0	0.50	5.00
658	Guscio fond.	669	670	729	728	1	40.0	0.50	5.00
659	Guscio fond.	670	671	730	729	1	40.0	0.50	5.00
660	Guscio fond.	671	672	731	730	1	40.0	0.50	5.00
661	Guscio fond.	672	673	732	731	1	40.0	0.50	5.00
662	Guscio fond.	673	674	733	732	1	40.0	0.50	5.00
663	Guscio fond.	674	675	734	733	1	40.0	0.50	5.00
664	Guscio fond.	675	676	735	734	1	40.0	0.50	5.00
665	Guscio fond.	676	677	736	735	1	40.0	0.50	5.00
666	Guscio fond.	677	678	737	736	1	40.0	0.50	5.00
667	Guscio fond.	678	679	738	737	1	40.0	0.50	5.00
668	Guscio fond.	679	680	739	738	1	40.0	0.50	5.00
669	Guscio fond.	680	681	740	739	1	40.0	0.50	5.00
670	Guscio fond.	681	682	741	740	1	40.0	0.50	5.00
671	Guscio fond.	682	683	742	741	1	40.0	0.50	5.00
672	Guscio fond.	683	684	743	742	1	40.0	0.50	5.00
673	Guscio fond.	684	685	744	743	1	40.0	0.50	5.00
674	Guscio fond.	685	686	745	744	1	40.0	0.50	5.00
675	Guscio fond.	686	687	746	745	1	40.0	0.50	5.00
676	Guscio fond.	687	688	747	746	1	40.0	0.50	5.00
677	Guscio fond.	688	689	748	747	1	40.0	0.50	5.00
678	Guscio fond.	689	690	749	748	1	40.0	0.50	5.00
679	Guscio fond.	690	691	750	749	1	40.0	0.50	5.00
680	Guscio fond.	691	692	751	750	1	40.0	0.50	5.00
681	Guscio fond.	692	693	752	751	1	40.0	0.50	5.00
682	Guscio fond.	693	694	753	752	1	40.0	0.50	5.00
683	Guscio fond.	694	695	754	753	1	40.0	0.50	5.00
684	Guscio fond.	695	696	755	754	1	40.0	0.50	5.00
685	Guscio fond.	696	697	756	755	1	40.0	0.50	5.00
686	Guscio fond.	697	698	757	756	1	40.0	0.50	5.00
687	Guscio fond.	698	699	758	757	1	40.0	0.50	5.00
688	Guscio fond.	699	700	759	758	1	40.0	0.50	5.00
689	Guscio fond.	700	701	760	759	1	40.0	0.50	5.00
690	Guscio fond.	701	702	761	760	1	40.0	0.50	5.00
691	Guscio fond.	702	703	762	761	1	40.0	0.50	5.00
692	Guscio fond.	703	704	763	762	1	40.0	0.50	5.00
693	Guscio fond.	704	705	764	763	1	40.0	0.50	5.00
694	Guscio fond.	705	706	765	764	1	40.0	0.50	5.00
695	Guscio fond.	706	707	766	765	1	40.0	0.50	5.00
696	Guscio fond.	707	708	767	766	1	40.0	0.50	5.00
697	Setto	297	356	774	768	1	15.0		
698	Setto	307	366	779	769	1	15.0		
699	Setto	319	378	785	770	1	15.0		
700	Setto	331	390	791	771	1	15.0		
701	Setto	343	402	797	772	1	15.0		
702	Setto	353	412	802	773	1	15.0		
703	Setto	356	415	803	774	1	15.0		
704	Setto	358	417	804	775	1	15.0		
705	Setto	360	419	805	776	1	15.0		
706	Setto	362	421	806	777	1	15.0		
707	Setto	364	423	807	778	1	15.0		
708	Setto	366	425	808	779	1	15.0		
709	Setto	368	427	809	780	1	15.0		
710	Setto	370	429	810	781	1	15.0		
711	Setto	372	431	811	782	1	15.0		
712	Setto	374	433	812	783	1	15.0		
713	Setto	376	435	813	784	1	15.0		
714	Setto	378	437	814	785	1	15.0		
715	Setto	380	439	815	786	1	15.0		
716	Setto	382	441	816	787	1	15.0		
717	Setto	384	443	817	788	1	15.0		
718	Setto	386	445	818	789	1	15.0		
719	Setto	388	447	819	790	1	15.0		
720	Setto	390	449	820	791	1	15.0		
721	Setto	392	451	821	792	1	15.0		
722	Setto	394	453	822	793	1	15.0		
723	Setto	396	455	823	794	1	15.0		
724	Setto	398	457	824	795	1	15.0		
725	Setto	400	459	825	796	1	15.0		
726	Setto	402	461	826	797	1	15.0		

727	Setto	404	463	827	798	1	15.0
728	Setto	406	465	828	799	1	15.0
729	Setto	408	467	829	800	1	15.0
730	Setto	410	469	830	801	1	15.0
731	Setto	412	471	831	802	1	15.0
732	Setto	415	474	832	803	1	15.0
733	Setto	417	476	833	804	1	15.0
734	Setto	419	478	834	805	1	15.0
735	Setto	421	480	835	806	1	15.0
736	Setto	423	482	836	807	1	15.0
737	Setto	425	484	837	808	1	15.0
738	Setto	427	486	838	809	1	15.0
739	Setto	429	488	839	810	1	15.0
740	Setto	431	490	840	811	1	15.0
741	Setto	433	492	841	812	1	15.0
742	Setto	435	494	842	813	1	15.0
743	Setto	437	496	843	814	1	15.0
744	Setto	439	498	844	815	1	15.0
745	Setto	441	500	845	816	1	15.0
746	Setto	443	502	846	817	1	15.0
747	Setto	445	504	847	818	1	15.0
748	Setto	447	506	848	819	1	15.0
749	Setto	449	508	849	820	1	15.0
750	Setto	451	510	850	821	1	15.0
751	Setto	453	512	851	822	1	15.0
752	Setto	455	514	852	823	1	15.0
753	Setto	457	516	853	824	1	15.0
754	Setto	459	518	854	825	1	15.0
755	Setto	461	520	855	826	1	15.0
756	Setto	463	522	856	827	1	15.0
757	Setto	465	524	857	828	1	15.0
758	Setto	467	526	858	829	1	15.0
759	Setto	469	528	859	830	1	15.0
760	Setto	471	530	860	831	1	15.0
761	Setto	474	533	861	832	1	15.0
762	Setto	476	535	862	833	1	15.0
763	Setto	478	537	863	834	1	15.0
764	Setto	480	539	864	835	1	15.0
765	Setto	482	541	865	836	1	15.0
766	Setto	484	543	866	837	1	15.0
767	Setto	486	545	867	838	1	15.0
768	Setto	488	547	868	839	1	15.0
769	Setto	490	549	869	840	1	15.0
770	Setto	492	551	870	841	1	15.0
771	Setto	494	553	871	842	1	15.0
772	Setto	496	555	872	843	1	15.0
773	Setto	498	557	873	844	1	15.0
774	Setto	500	559	874	845	1	15.0
775	Setto	502	561	875	846	1	15.0
776	Setto	504	563	876	847	1	15.0
777	Setto	506	565	877	848	1	15.0
778	Setto	508	567	878	849	1	15.0
779	Setto	510	569	879	850	1	15.0
780	Setto	512	571	880	851	1	15.0
781	Setto	514	573	881	852	1	15.0
782	Setto	516	575	882	853	1	15.0
783	Setto	518	577	883	854	1	15.0
784	Setto	520	579	884	855	1	15.0
785	Setto	522	581	885	856	1	15.0
786	Setto	524	583	886	857	1	15.0
787	Setto	526	585	887	858	1	15.0
788	Setto	528	587	888	859	1	15.0
789	Setto	530	589	889	860	1	15.0
790	Setto	533	592	890	861	1	15.0
791	Setto	535	594	891	862	1	15.0
792	Setto	537	596	892	863	1	15.0
793	Setto	539	598	893	864	1	15.0
794	Setto	541	600	894	865	1	15.0
795	Setto	543	602	895	866	1	15.0
796	Setto	545	604	896	867	1	15.0
797	Setto	547	606	897	868	1	15.0
798	Setto	549	608	898	869	1	15.0
799	Setto	551	610	899	870	1	15.0
800	Setto	553	612	900	871	1	15.0
801	Setto	555	614	901	872	1	15.0
802	Setto	557	616	902	873	1	15.0
803	Setto	559	618	903	874	1	15.0
804	Setto	561	620	904	875	1	15.0
805	Setto	563	622	905	876	1	15.0

806	Setto	565	624	906	877	1	15.0
807	Setto	567	626	907	878	1	15.0
808	Setto	569	628	908	879	1	15.0
809	Setto	571	630	909	880	1	15.0
810	Setto	573	632	910	881	1	15.0
811	Setto	575	634	911	882	1	15.0
812	Setto	577	636	912	883	1	15.0
813	Setto	579	638	913	884	1	15.0
814	Setto	581	640	914	885	1	15.0
815	Setto	583	642	915	886	1	15.0
816	Setto	585	644	916	887	1	15.0
817	Setto	587	646	917	888	1	15.0
818	Setto	589	648	918	889	1	15.0
819	Setto	592	651	919	890	1	15.0
820	Setto	594	653	921	891	1	15.0
821	Setto	596	655	923	892	1	15.0
822	Setto	598	657	925	893	1	15.0
823	Setto	600	659	927	894	1	15.0
824	Setto	602	661	929	895	1	15.0
825	Setto	604	663	931	896	1	15.0
826	Setto	606	665	933	897	1	15.0
827	Setto	608	667	935	898	1	15.0
828	Setto	610	669	937	899	1	15.0
829	Setto	612	671	939	900	1	15.0
830	Setto	614	673	941	901	1	15.0
831	Setto	616	675	943	902	1	15.0
832	Setto	618	677	945	903	1	15.0
833	Setto	620	679	947	904	1	15.0
834	Setto	622	681	949	905	1	15.0
835	Setto	624	683	951	906	1	15.0
836	Setto	626	685	953	907	1	15.0
837	Setto	628	687	955	908	1	15.0
838	Setto	630	689	957	909	1	15.0
839	Setto	632	691	959	910	1	15.0
840	Setto	634	693	961	911	1	15.0
841	Setto	636	695	963	912	1	15.0
842	Setto	638	697	965	913	1	15.0
843	Setto	640	699	967	914	1	15.0
844	Setto	642	701	969	915	1	15.0
845	Setto	644	703	971	916	1	15.0
846	Setto	646	705	973	917	1	15.0
847	Setto	648	707	975	918	1	15.0
848	Setto	919	920	652	651	1	15.0
849	Setto	920	921	653	652	1	15.0
850	Setto	921	922	654	653	1	15.0
851	Setto	922	923	655	654	1	15.0
852	Setto	923	924	656	655	1	15.0
853	Setto	924	925	657	656	1	15.0
854	Setto	925	926	658	657	1	15.0
855	Setto	926	927	659	658	1	15.0
856	Setto	927	928	660	659	1	15.0
857	Setto	928	929	661	660	1	15.0
858	Setto	929	930	662	661	1	15.0
859	Setto	930	931	663	662	1	15.0
860	Setto	931	932	664	663	1	15.0
861	Setto	932	933	665	664	1	15.0
862	Setto	933	934	666	665	1	15.0
863	Setto	934	935	667	666	1	15.0
864	Setto	935	936	668	667	1	15.0
865	Setto	936	937	669	668	1	15.0
866	Setto	937	938	670	669	1	15.0
867	Setto	938	939	671	670	1	15.0
868	Setto	939	940	672	671	1	15.0
869	Setto	940	941	673	672	1	15.0
870	Setto	941	942	674	673	1	15.0
871	Setto	942	943	675	674	1	15.0
872	Setto	943	944	676	675	1	15.0
873	Setto	944	945	677	676	1	15.0
874	Setto	945	946	678	677	1	15.0
875	Setto	946	947	679	678	1	15.0
876	Setto	947	948	680	679	1	15.0
877	Setto	948	949	681	680	1	15.0
878	Setto	949	950	682	681	1	15.0
879	Setto	950	951	683	682	1	15.0
880	Setto	951	952	684	683	1	15.0
881	Setto	952	953	685	684	1	15.0
882	Setto	953	954	686	685	1	15.0
883	Setto	954	955	687	686	1	15.0
884	Setto	955	956	688	687	1	15.0

885	Setto	956	957	689	688	1	15.0
886	Setto	957	958	690	689	1	15.0
887	Setto	958	959	691	690	1	15.0
888	Setto	959	960	692	691	1	15.0
889	Setto	960	961	693	692	1	15.0
890	Setto	961	962	694	693	1	15.0
891	Setto	962	963	695	694	1	15.0
892	Setto	963	964	696	695	1	15.0
893	Setto	964	965	697	696	1	15.0
894	Setto	965	966	698	697	1	15.0
895	Setto	966	967	699	698	1	15.0
896	Setto	967	968	700	699	1	15.0
897	Setto	968	969	701	700	1	15.0
898	Setto	969	970	702	701	1	15.0
899	Setto	970	971	703	702	1	15.0
900	Setto	971	972	704	703	1	15.0
901	Setto	972	973	705	704	1	15.0
902	Setto	973	974	706	705	1	15.0
903	Setto	974	975	707	706	1	15.0
904	Setto	768	774	982	976	1	15.0
905	Setto	769	779	987	977	1	15.0
906	Setto	770	785	993	978	1	15.0
907	Setto	771	791	999	979	1	15.0
908	Setto	772	797	1005	980	1	15.0
909	Setto	773	802	1010	981	1	15.0
910	Setto	774	803	1011	982	1	15.0
911	Setto	775	804	1012	983	1	15.0
912	Setto	776	805	1013	984	1	15.0
913	Setto	777	806	1014	985	1	15.0
914	Setto	778	807	1015	986	1	15.0
915	Setto	779	808	1016	987	1	15.0
916	Setto	780	809	1017	988	1	15.0
917	Setto	781	810	1018	989	1	15.0
918	Setto	782	811	1019	990	1	15.0
919	Setto	783	812	1020	991	1	15.0
920	Setto	784	813	1021	992	1	15.0
921	Setto	785	814	1022	993	1	15.0
922	Setto	786	815	1023	994	1	15.0
923	Setto	787	816	1024	995	1	15.0
924	Setto	788	817	1025	996	1	15.0
925	Setto	789	818	1026	997	1	15.0
926	Setto	790	819	1027	998	1	15.0
927	Setto	791	820	1028	999	1	15.0
928	Setto	792	821	1029	1000	1	15.0
929	Setto	793	822	1030	1001	1	15.0
930	Setto	794	823	1031	1002	1	15.0
931	Setto	795	824	1032	1003	1	15.0
932	Setto	796	825	1033	1004	1	15.0
933	Setto	797	826	1034	1005	1	15.0
934	Setto	798	827	1035	1006	1	15.0
935	Setto	799	828	1036	1007	1	15.0
936	Setto	800	829	1037	1008	1	15.0
937	Setto	801	830	1038	1009	1	15.0
938	Setto	802	831	1039	1010	1	15.0
939	Setto	803	832	1040	1011	1	15.0
940	Setto	804	833	1041	1012	1	15.0
941	Setto	805	834	1042	1013	1	15.0
942	Setto	806	835	1043	1014	1	15.0
943	Setto	807	836	1044	1015	1	15.0
944	Setto	808	837	1045	1016	1	15.0
945	Setto	809	838	1046	1017	1	15.0
946	Setto	810	839	1047	1018	1	15.0
947	Setto	811	840	1048	1019	1	15.0
948	Setto	812	841	1049	1020	1	15.0
949	Setto	813	842	1050	1021	1	15.0
950	Setto	814	843	1051	1022	1	15.0
951	Setto	815	844	1052	1023	1	15.0
952	Setto	816	845	1053	1024	1	15.0
953	Setto	817	846	1054	1025	1	15.0
954	Setto	818	847	1055	1026	1	15.0
955	Setto	819	848	1056	1027	1	15.0
956	Setto	820	849	1057	1028	1	15.0
957	Setto	821	850	1058	1029	1	15.0
958	Setto	822	851	1059	1030	1	15.0
959	Setto	823	852	1060	1031	1	15.0
960	Setto	824	853	1061	1032	1	15.0
961	Setto	825	854	1062	1033	1	15.0
962	Setto	826	855	1063	1034	1	15.0
963	Setto	827	856	1064	1035	1	15.0

964	Setto	828	857	1065	1036	1	15.0
965	Setto	829	858	1066	1037	1	15.0
966	Setto	830	859	1067	1038	1	15.0
967	Setto	831	860	1068	1039	1	15.0
968	Setto	832	861	1069	1040	1	15.0
969	Setto	833	862	1070	1041	1	15.0
970	Setto	834	863	1071	1042	1	15.0
971	Setto	835	864	1072	1043	1	15.0
972	Setto	836	865	1073	1044	1	15.0
973	Setto	837	866	1074	1045	1	15.0
974	Setto	838	867	1075	1046	1	15.0
975	Setto	839	868	1076	1047	1	15.0
976	Setto	840	869	1077	1048	1	15.0
977	Setto	841	870	1078	1049	1	15.0
978	Setto	842	871	1079	1050	1	15.0
979	Setto	843	872	1080	1051	1	15.0
980	Setto	844	873	1081	1052	1	15.0
981	Setto	845	874	1082	1053	1	15.0
982	Setto	846	875	1083	1054	1	15.0
983	Setto	847	876	1084	1055	1	15.0
984	Setto	848	877	1085	1056	1	15.0
985	Setto	849	878	1086	1057	1	15.0
986	Setto	850	879	1087	1058	1	15.0
987	Setto	851	880	1088	1059	1	15.0
988	Setto	852	881	1089	1060	1	15.0
989	Setto	853	882	1090	1061	1	15.0
990	Setto	854	883	1091	1062	1	15.0
991	Setto	855	884	1092	1063	1	15.0
992	Setto	856	885	1093	1064	1	15.0
993	Setto	857	886	1094	1065	1	15.0
994	Setto	858	887	1095	1066	1	15.0
995	Setto	859	888	1096	1067	1	15.0
996	Setto	860	889	1097	1068	1	15.0
997	Setto	861	890	1098	1069	1	15.0
998	Setto	862	891	1099	1070	1	15.0
999	Setto	863	892	1100	1071	1	15.0
1000	Setto	864	893	1101	1072	1	15.0
1001	Setto	865	894	1102	1073	1	15.0
1002	Setto	866	895	1103	1074	1	15.0
1003	Setto	867	896	1104	1075	1	15.0
1004	Setto	868	897	1105	1076	1	15.0
1005	Setto	869	898	1106	1077	1	15.0
1006	Setto	870	899	1107	1078	1	15.0
1007	Setto	871	900	1108	1079	1	15.0
1008	Setto	872	901	1109	1080	1	15.0
1009	Setto	873	902	1110	1081	1	15.0
1010	Setto	874	903	1111	1082	1	15.0
1011	Setto	875	904	1112	1083	1	15.0
1012	Setto	876	905	1113	1084	1	15.0
1013	Setto	877	906	1114	1085	1	15.0
1014	Setto	878	907	1115	1086	1	15.0
1015	Setto	879	908	1116	1087	1	15.0
1016	Setto	880	909	1117	1088	1	15.0
1017	Setto	881	910	1118	1089	1	15.0
1018	Setto	882	911	1119	1090	1	15.0
1019	Setto	883	912	1120	1091	1	15.0
1020	Setto	884	913	1121	1092	1	15.0
1021	Setto	885	914	1122	1093	1	15.0
1022	Setto	886	915	1123	1094	1	15.0
1023	Setto	887	916	1124	1095	1	15.0
1024	Setto	888	917	1125	1096	1	15.0
1025	Setto	889	918	1126	1097	1	15.0
1026	Setto	890	919	1127	1098	1	15.0
1027	Setto	891	921	1129	1099	1	15.0
1028	Setto	892	923	1131	1100	1	15.0
1029	Setto	893	925	1133	1101	1	15.0
1030	Setto	894	927	1135	1102	1	15.0
1031	Setto	895	929	1137	1103	1	15.0
1032	Setto	896	931	1139	1104	1	15.0
1033	Setto	897	933	1141	1105	1	15.0
1034	Setto	898	935	1143	1106	1	15.0
1035	Setto	899	937	1145	1107	1	15.0
1036	Setto	900	939	1147	1108	1	15.0
1037	Setto	901	941	1149	1109	1	15.0
1038	Setto	902	943	1151	1110	1	15.0
1039	Setto	903	945	1153	1111	1	15.0
1040	Setto	904	947	1155	1112	1	15.0
1041	Setto	905	949	1157	1113	1	15.0
1042	Setto	906	951	1159	1114	1	15.0

1043	Setto	907	953	1161	1115	1	15.0
1044	Setto	908	955	1163	1116	1	15.0
1045	Setto	909	957	1165	1117	1	15.0
1046	Setto	910	959	1167	1118	1	15.0
1047	Setto	911	961	1169	1119	1	15.0
1048	Setto	912	963	1171	1120	1	15.0
1049	Setto	913	965	1173	1121	1	15.0
1050	Setto	914	967	1175	1122	1	15.0
1051	Setto	915	969	1177	1123	1	15.0
1052	Setto	916	971	1179	1124	1	15.0
1053	Setto	917	973	1181	1125	1	15.0
1054	Setto	918	975	1183	1126	1	15.0
1055	Setto	1127	1128	920	919	1	15.0
1056	Setto	1128	1129	921	920	1	15.0
1057	Setto	1129	1130	922	921	1	15.0
1058	Setto	1130	1131	923	922	1	15.0
1059	Setto	1131	1132	924	923	1	15.0
1060	Setto	1132	1133	925	924	1	15.0
1061	Setto	1133	1134	926	925	1	15.0
1062	Setto	1134	1135	927	926	1	15.0
1063	Setto	1135	1136	928	927	1	15.0
1064	Setto	1136	1137	929	928	1	15.0
1065	Setto	1137	1138	930	929	1	15.0
1066	Setto	1138	1139	931	930	1	15.0
1067	Setto	1139	1140	932	931	1	15.0
1068	Setto	1140	1141	933	932	1	15.0
1069	Setto	1141	1142	934	933	1	15.0
1070	Setto	1142	1143	935	934	1	15.0
1071	Setto	1143	1144	936	935	1	15.0
1072	Setto	1144	1145	937	936	1	15.0
1073	Setto	1145	1146	938	937	1	15.0
1074	Setto	1146	1147	939	938	1	15.0
1075	Setto	1147	1148	940	939	1	15.0
1076	Setto	1148	1149	941	940	1	15.0
1077	Setto	1149	1150	942	941	1	15.0
1078	Setto	1150	1151	943	942	1	15.0
1079	Setto	1151	1152	944	943	1	15.0
1080	Setto	1152	1153	945	944	1	15.0
1081	Setto	1153	1154	946	945	1	15.0
1082	Setto	1154	1155	947	946	1	15.0
1083	Setto	1155	1156	948	947	1	15.0
1084	Setto	1156	1157	949	948	1	15.0
1085	Setto	1157	1158	950	949	1	15.0
1086	Setto	1158	1159	951	950	1	15.0
1087	Setto	1159	1160	952	951	1	15.0
1088	Setto	1160	1161	953	952	1	15.0
1089	Setto	1161	1162	954	953	1	15.0
1090	Setto	1162	1163	955	954	1	15.0
1091	Setto	1163	1164	956	955	1	15.0
1092	Setto	1164	1165	957	956	1	15.0
1093	Setto	1165	1166	958	957	1	15.0
1094	Setto	1166	1167	959	958	1	15.0
1095	Setto	1167	1168	960	959	1	15.0
1096	Setto	1168	1169	961	960	1	15.0
1097	Setto	1169	1170	962	961	1	15.0
1098	Setto	1170	1171	963	962	1	15.0
1099	Setto	1171	1172	964	963	1	15.0
1100	Setto	1172	1173	965	964	1	15.0
1101	Setto	1173	1174	966	965	1	15.0
1102	Setto	1174	1175	967	966	1	15.0
1103	Setto	1175	1176	968	967	1	15.0
1104	Setto	1176	1177	969	968	1	15.0
1105	Setto	1177	1178	970	969	1	15.0
1106	Setto	1178	1179	971	970	1	15.0
1107	Setto	1179	1180	972	971	1	15.0
1108	Setto	1180	1181	973	972	1	15.0
1109	Setto	1181	1182	974	973	1	15.0
1110	Setto	1182	1183	975	974	1	15.0
1111	Setto	976	982	1190	1184	1	15.0
1112	Setto	977	987	1200	1185	1	15.0
1113	Setto	978	993	1212	1186	1	15.0
1114	Setto	979	999	1224	1187	1	15.0
1115	Setto	980	1005	1236	1188	1	15.0
1116	Setto	981	1010	1246	1189	1	15.0
1117	Setto	982	1011	1247	1190	1	15.0
1118	Setto	983	1012	1249	1192	1	15.0
1119	Setto	984	1013	1251	1194	1	15.0
1120	Setto	985	1014	1253	1196	1	15.0
1121	Setto	986	1015	1255	1198	1	15.0

1122	Setto	987	1016	1257	1200	1	15.0
1123	Setto	988	1017	1259	1202	1	15.0
1124	Setto	989	1018	1261	1204	1	15.0
1125	Setto	990	1019	1263	1206	1	15.0
1126	Setto	991	1020	1265	1208	1	15.0
1127	Setto	992	1021	1267	1210	1	15.0
1128	Setto	993	1022	1269	1212	1	15.0
1129	Setto	994	1023	1271	1214	1	15.0
1130	Setto	995	1024	1273	1216	1	15.0
1131	Setto	996	1025	1275	1218	1	15.0
1132	Setto	997	1026	1277	1220	1	15.0
1133	Setto	998	1027	1279	1222	1	15.0
1134	Setto	999	1028	1281	1224	1	15.0
1135	Setto	1000	1029	1283	1226	1	15.0
1136	Setto	1001	1030	1285	1228	1	15.0
1137	Setto	1002	1031	1287	1230	1	15.0
1138	Setto	1003	1032	1289	1232	1	15.0
1139	Setto	1004	1033	1291	1234	1	15.0
1140	Setto	1005	1034	1293	1236	1	15.0
1141	Setto	1006	1035	1295	1238	1	15.0
1142	Setto	1007	1036	1297	1240	1	15.0
1143	Setto	1008	1037	1299	1242	1	15.0
1144	Setto	1009	1038	1301	1244	1	15.0
1145	Setto	1010	1039	1303	1246	1	15.0
1146	Setto	1011	1040	1304	1247	1	15.0
1147	Setto	1012	1041	1306	1249	1	15.0
1148	Setto	1013	1042	1308	1251	1	15.0
1149	Setto	1014	1043	1310	1253	1	15.0
1150	Setto	1015	1044	1312	1255	1	15.0
1151	Setto	1016	1045	1314	1257	1	15.0
1152	Setto	1017	1046	1316	1259	1	15.0
1153	Setto	1018	1047	1318	1261	1	15.0
1154	Setto	1019	1048	1320	1263	1	15.0
1155	Setto	1020	1049	1322	1265	1	15.0
1156	Setto	1021	1050	1324	1267	1	15.0
1157	Setto	1022	1051	1326	1269	1	15.0
1158	Setto	1023	1052	1328	1271	1	15.0
1159	Setto	1024	1053	1330	1273	1	15.0
1160	Setto	1025	1054	1332	1275	1	15.0
1161	Setto	1026	1055	1334	1277	1	15.0
1162	Setto	1027	1056	1336	1279	1	15.0
1163	Setto	1028	1057	1338	1281	1	15.0
1164	Setto	1029	1058	1340	1283	1	15.0
1165	Setto	1030	1059	1342	1285	1	15.0
1166	Setto	1031	1060	1344	1287	1	15.0
1167	Setto	1032	1061	1346	1289	1	15.0
1168	Setto	1033	1062	1348	1291	1	15.0
1169	Setto	1034	1063	1350	1293	1	15.0
1170	Setto	1035	1064	1352	1295	1	15.0
1171	Setto	1036	1065	1354	1297	1	15.0
1172	Setto	1037	1066	1356	1299	1	15.0
1173	Setto	1038	1067	1358	1301	1	15.0
1174	Setto	1039	1068	1360	1303	1	15.0
1175	Setto	1040	1069	1361	1304	1	15.0
1176	Setto	1041	1070	1363	1306	1	15.0
1177	Setto	1042	1071	1365	1308	1	15.0
1178	Setto	1043	1072	1367	1310	1	15.0
1179	Setto	1044	1073	1369	1312	1	15.0
1180	Setto	1045	1074	1371	1314	1	15.0
1181	Setto	1046	1075	1373	1316	1	15.0
1182	Setto	1047	1076	1375	1318	1	15.0
1183	Setto	1048	1077	1377	1320	1	15.0
1184	Setto	1049	1078	1379	1322	1	15.0
1185	Setto	1050	1079	1381	1324	1	15.0
1186	Setto	1051	1080	1383	1326	1	15.0
1187	Setto	1052	1081	1385	1328	1	15.0
1188	Setto	1053	1082	1387	1330	1	15.0
1189	Setto	1054	1083	1389	1332	1	15.0
1190	Setto	1055	1084	1391	1334	1	15.0
1191	Setto	1056	1085	1393	1336	1	15.0
1192	Setto	1057	1086	1395	1338	1	15.0
1193	Setto	1058	1087	1397	1340	1	15.0
1194	Setto	1059	1088	1399	1342	1	15.0
1195	Setto	1060	1089	1401	1344	1	15.0
1196	Setto	1061	1090	1403	1346	1	15.0
1197	Setto	1062	1091	1405	1348	1	15.0
1198	Setto	1063	1092	1407	1350	1	15.0
1199	Setto	1064	1093	1409	1352	1	15.0
1200	Setto	1065	1094	1411	1354	1	15.0

1201	Setto	1066	1095	1413	1356	1	15.0
1202	Setto	1067	1096	1415	1358	1	15.0
1203	Setto	1068	1097	1417	1360	1	15.0
1204	Setto	1069	1098	1418	1361	1	15.0
1205	Setto	1070	1099	1420	1363	1	15.0
1206	Setto	1071	1100	1422	1365	1	15.0
1207	Setto	1072	1101	1424	1367	1	15.0
1208	Setto	1073	1102	1426	1369	1	15.0
1209	Setto	1074	1103	1428	1371	1	15.0
1210	Setto	1075	1104	1430	1373	1	15.0
1211	Setto	1076	1105	1432	1375	1	15.0
1212	Setto	1077	1106	1434	1377	1	15.0
1213	Setto	1078	1107	1436	1379	1	15.0
1214	Setto	1079	1108	1438	1381	1	15.0
1215	Setto	1080	1109	1440	1383	1	15.0
1216	Setto	1081	1110	1442	1385	1	15.0
1217	Setto	1082	1111	1444	1387	1	15.0
1218	Setto	1083	1112	1446	1389	1	15.0
1219	Setto	1084	1113	1448	1391	1	15.0
1220	Setto	1085	1114	1450	1393	1	15.0
1221	Setto	1086	1115	1452	1395	1	15.0
1222	Setto	1087	1116	1454	1397	1	15.0
1223	Setto	1088	1117	1456	1399	1	15.0
1224	Setto	1089	1118	1458	1401	1	15.0
1225	Setto	1090	1119	1460	1403	1	15.0
1226	Setto	1091	1120	1462	1405	1	15.0
1227	Setto	1092	1121	1464	1407	1	15.0
1228	Setto	1093	1122	1466	1409	1	15.0
1229	Setto	1094	1123	1468	1411	1	15.0
1230	Setto	1095	1124	1470	1413	1	15.0
1231	Setto	1096	1125	1472	1415	1	15.0
1232	Setto	1097	1126	1474	1417	1	15.0
1233	Setto	1098	1127	1475	1418	1	15.0
1234	Setto	1099	1129	1477	1420	1	15.0
1235	Setto	1100	1131	1479	1422	1	15.0
1236	Setto	1101	1133	1481	1424	1	15.0
1237	Setto	1102	1135	1483	1426	1	15.0
1238	Setto	1103	1137	1485	1428	1	15.0
1239	Setto	1104	1139	1487	1430	1	15.0
1240	Setto	1105	1141	1489	1432	1	15.0
1241	Setto	1106	1143	1491	1434	1	15.0
1242	Setto	1107	1145	1493	1436	1	15.0
1243	Setto	1108	1147	1495	1438	1	15.0
1244	Setto	1109	1149	1497	1440	1	15.0
1245	Setto	1110	1151	1499	1442	1	15.0
1246	Setto	1111	1153	1501	1444	1	15.0
1247	Setto	1112	1155	1503	1446	1	15.0
1248	Setto	1113	1157	1505	1448	1	15.0
1249	Setto	1114	1159	1507	1450	1	15.0
1250	Setto	1115	1161	1509	1452	1	15.0
1251	Setto	1116	1163	1511	1454	1	15.0
1252	Setto	1117	1165	1513	1456	1	15.0
1253	Setto	1118	1167	1515	1458	1	15.0
1254	Setto	1119	1169	1517	1460	1	15.0
1255	Setto	1120	1171	1519	1462	1	15.0
1256	Setto	1121	1173	1521	1464	1	15.0
1257	Setto	1122	1175	1523	1466	1	15.0
1258	Setto	1123	1177	1525	1468	1	15.0
1259	Setto	1124	1179	1527	1470	1	15.0
1260	Setto	1125	1181	1529	1472	1	15.0
1261	Setto	1126	1183	1531	1474	1	15.0
1262	Setto	1475	1476	1128	1127	1	15.0
1263	Setto	1476	1477	1129	1128	1	15.0
1264	Setto	1477	1478	1130	1129	1	15.0
1265	Setto	1478	1479	1131	1130	1	15.0
1266	Setto	1479	1480	1132	1131	1	15.0
1267	Setto	1480	1481	1133	1132	1	15.0
1268	Setto	1481	1482	1134	1133	1	15.0
1269	Setto	1482	1483	1135	1134	1	15.0
1270	Setto	1483	1484	1136	1135	1	15.0
1271	Setto	1484	1485	1137	1136	1	15.0
1272	Setto	1485	1486	1138	1137	1	15.0
1273	Setto	1486	1487	1139	1138	1	15.0
1274	Setto	1487	1488	1140	1139	1	15.0
1275	Setto	1488	1489	1141	1140	1	15.0
1276	Setto	1489	1490	1142	1141	1	15.0
1277	Setto	1490	1491	1143	1142	1	15.0
1278	Setto	1491	1492	1144	1143	1	15.0
1279	Setto	1492	1493	1145	1144	1	15.0

1280	Setto	1493	1494	1146	1145	1	15.0
1281	Setto	1494	1495	1147	1146	1	15.0
1282	Setto	1495	1496	1148	1147	1	15.0
1283	Setto	1496	1497	1149	1148	1	15.0
1284	Setto	1497	1498	1150	1149	1	15.0
1285	Setto	1498	1499	1151	1150	1	15.0
1286	Setto	1499	1500	1152	1151	1	15.0
1287	Setto	1500	1501	1153	1152	1	15.0
1288	Setto	1501	1502	1154	1153	1	15.0
1289	Setto	1502	1503	1155	1154	1	15.0
1290	Setto	1503	1504	1156	1155	1	15.0
1291	Setto	1504	1505	1157	1156	1	15.0
1292	Setto	1505	1506	1158	1157	1	15.0
1293	Setto	1506	1507	1159	1158	1	15.0
1294	Setto	1507	1508	1160	1159	1	15.0
1295	Setto	1508	1509	1161	1160	1	15.0
1296	Setto	1509	1510	1162	1161	1	15.0
1297	Setto	1510	1511	1163	1162	1	15.0
1298	Setto	1511	1512	1164	1163	1	15.0
1299	Setto	1512	1513	1165	1164	1	15.0
1300	Setto	1513	1514	1166	1165	1	15.0
1301	Setto	1514	1515	1167	1166	1	15.0
1302	Setto	1515	1516	1168	1167	1	15.0
1303	Setto	1516	1517	1169	1168	1	15.0
1304	Setto	1517	1518	1170	1169	1	15.0
1305	Setto	1518	1519	1171	1170	1	15.0
1306	Setto	1519	1520	1172	1171	1	15.0
1307	Setto	1520	1521	1173	1172	1	15.0
1308	Setto	1521	1522	1174	1173	1	15.0
1309	Setto	1522	1523	1175	1174	1	15.0
1310	Setto	1523	1524	1176	1175	1	15.0
1311	Setto	1524	1525	1177	1176	1	15.0
1312	Setto	1525	1526	1178	1177	1	15.0
1313	Setto	1526	1527	1179	1178	1	15.0
1314	Setto	1527	1528	1180	1179	1	15.0
1315	Setto	1528	1529	1181	1180	1	15.0
1316	Setto	1529	1530	1182	1181	1	15.0
1317	Setto	1530	1531	1183	1182	1	15.0
1318	Guscio	1190	1191	1248	1247	1	15.0
1319	Guscio	1191	1192	1249	1248	1	15.0
1320	Guscio	1192	1193	1250	1249	1	15.0
1321	Guscio	1193	1194	1251	1250	1	15.0
1322	Guscio	1194	1195	1252	1251	1	15.0
1323	Guscio	1195	1196	1253	1252	1	15.0
1324	Guscio	1196	1197	1254	1253	1	15.0
1325	Guscio	1197	1198	1255	1254	1	15.0
1326	Guscio	1198	1199	1256	1255	1	15.0
1327	Guscio	1199	1200	1257	1256	1	15.0
1328	Guscio	1200	1201	1258	1257	1	15.0
1329	Guscio	1201	1202	1259	1258	1	15.0
1330	Guscio	1202	1203	1260	1259	1	15.0
1331	Guscio	1203	1204	1261	1260	1	15.0
1332	Guscio	1204	1205	1262	1261	1	15.0
1333	Guscio	1205	1206	1263	1262	1	15.0
1334	Guscio	1206	1207	1264	1263	1	15.0
1335	Guscio	1207	1208	1265	1264	1	15.0
1336	Guscio	1208	1209	1266	1265	1	15.0
1337	Guscio	1209	1210	1267	1266	1	15.0
1338	Guscio	1210	1211	1268	1267	1	15.0
1339	Guscio	1211	1212	1269	1268	1	15.0
1340	Guscio	1212	1213	1270	1269	1	15.0
1341	Guscio	1213	1214	1271	1270	1	15.0
1342	Guscio	1214	1215	1272	1271	1	15.0
1343	Guscio	1215	1216	1273	1272	1	15.0
1344	Guscio	1216	1217	1274	1273	1	15.0
1345	Guscio	1217	1218	1275	1274	1	15.0
1346	Guscio	1218	1219	1276	1275	1	15.0
1347	Guscio	1219	1220	1277	1276	1	15.0
1348	Guscio	1220	1221	1278	1277	1	15.0
1349	Guscio	1221	1222	1279	1278	1	15.0
1350	Guscio	1222	1223	1280	1279	1	15.0
1351	Guscio	1223	1224	1281	1280	1	15.0
1352	Guscio	1224	1225	1282	1281	1	15.0
1353	Guscio	1225	1226	1283	1282	1	15.0
1354	Guscio	1226	1227	1284	1283	1	15.0
1355	Guscio	1227	1228	1285	1284	1	15.0
1356	Guscio	1228	1229	1286	1285	1	15.0
1357	Guscio	1229	1230	1287	1286	1	15.0
1358	Guscio	1230	1231	1288	1287	1	15.0

1359	Guscio	1231	1232	1289	1288	1	15.0
1360	Guscio	1232	1233	1290	1289	1	15.0
1361	Guscio	1233	1234	1291	1290	1	15.0
1362	Guscio	1234	1235	1292	1291	1	15.0
1363	Guscio	1235	1236	1293	1292	1	15.0
1364	Guscio	1236	1237	1294	1293	1	15.0
1365	Guscio	1237	1238	1295	1294	1	15.0
1366	Guscio	1238	1239	1296	1295	1	15.0
1367	Guscio	1239	1240	1297	1296	1	15.0
1368	Guscio	1240	1241	1298	1297	1	15.0
1369	Guscio	1241	1242	1299	1298	1	15.0
1370	Guscio	1242	1243	1300	1299	1	15.0
1371	Guscio	1243	1244	1301	1300	1	15.0
1372	Guscio	1244	1245	1302	1301	1	15.0
1373	Guscio	1245	1246	1303	1302	1	15.0
1374	Guscio	1247	1248	1305	1304	1	15.0
1375	Guscio	1248	1249	1306	1305	1	15.0
1376	Guscio	1249	1250	1307	1306	1	15.0
1377	Guscio	1250	1251	1308	1307	1	15.0
1378	Guscio	1251	1252	1309	1308	1	15.0
1379	Guscio	1252	1253	1310	1309	1	15.0
1380	Guscio	1253	1254	1311	1310	1	15.0
1381	Guscio	1254	1255	1312	1311	1	15.0
1382	Guscio	1255	1256	1313	1312	1	15.0
1383	Guscio	1256	1257	1314	1313	1	15.0
1384	Guscio	1257	1258	1315	1314	1	15.0
1385	Guscio	1258	1259	1316	1315	1	15.0
1386	Guscio	1259	1260	1317	1316	1	15.0
1387	Guscio	1260	1261	1318	1317	1	15.0
1388	Guscio	1261	1262	1319	1318	1	15.0
1389	Guscio	1262	1263	1320	1319	1	15.0
1390	Guscio	1263	1264	1321	1320	1	15.0
1391	Guscio	1264	1265	1322	1321	1	15.0
1392	Guscio	1265	1266	1323	1322	1	15.0
1393	Guscio	1266	1267	1324	1323	1	15.0
1394	Guscio	1267	1268	1325	1324	1	15.0
1395	Guscio	1268	1269	1326	1325	1	15.0
1396	Guscio	1269	1270	1327	1326	1	15.0
1397	Guscio	1270	1271	1328	1327	1	15.0
1398	Guscio	1271	1272	1329	1328	1	15.0
1399	Guscio	1272	1273	1330	1329	1	15.0
1400	Guscio	1273	1274	1331	1330	1	15.0
1401	Guscio	1274	1275	1332	1331	1	15.0
1402	Guscio	1275	1276	1333	1332	1	15.0
1403	Guscio	1276	1277	1334	1333	1	15.0
1404	Guscio	1277	1278	1335	1334	1	15.0
1405	Guscio	1278	1279	1336	1335	1	15.0
1406	Guscio	1279	1280	1337	1336	1	15.0
1407	Guscio	1280	1281	1338	1337	1	15.0
1408	Guscio	1281	1282	1339	1338	1	15.0
1409	Guscio	1282	1283	1340	1339	1	15.0
1410	Guscio	1283	1284	1341	1340	1	15.0
1411	Guscio	1284	1285	1342	1341	1	15.0
1412	Guscio	1285	1286	1343	1342	1	15.0
1413	Guscio	1286	1287	1344	1343	1	15.0
1414	Guscio	1287	1288	1345	1344	1	15.0
1415	Guscio	1288	1289	1346	1345	1	15.0
1416	Guscio	1289	1290	1347	1346	1	15.0
1417	Guscio	1290	1291	1348	1347	1	15.0
1418	Guscio	1291	1292	1349	1348	1	15.0
1419	Guscio	1292	1293	1350	1349	1	15.0
1420	Guscio	1293	1294	1351	1350	1	15.0
1421	Guscio	1294	1295	1352	1351	1	15.0
1422	Guscio	1295	1296	1353	1352	1	15.0
1423	Guscio	1296	1297	1354	1353	1	15.0
1424	Guscio	1297	1298	1355	1354	1	15.0
1425	Guscio	1298	1299	1356	1355	1	15.0
1426	Guscio	1299	1300	1357	1356	1	15.0
1427	Guscio	1300	1301	1358	1357	1	15.0
1428	Guscio	1301	1302	1359	1358	1	15.0
1429	Guscio	1302	1303	1360	1359	1	15.0
1430	Guscio	1304	1305	1362	1361	1	15.0
1431	Guscio	1305	1306	1363	1362	1	15.0
1432	Guscio	1306	1307	1364	1363	1	15.0
1433	Guscio	1307	1308	1365	1364	1	15.0
1434	Guscio	1308	1309	1366	1365	1	15.0
1435	Guscio	1309	1310	1367	1366	1	15.0
1436	Guscio	1310	1311	1368	1367	1	15.0
1437	Guscio	1311	1312	1369	1368	1	15.0

1438	Guscio	1312	1313	1370	1369	1	15.0
1439	Guscio	1313	1314	1371	1370	1	15.0
1440	Guscio	1314	1315	1372	1371	1	15.0
1441	Guscio	1315	1316	1373	1372	1	15.0
1442	Guscio	1316	1317	1374	1373	1	15.0
1443	Guscio	1317	1318	1375	1374	1	15.0
1444	Guscio	1318	1319	1376	1375	1	15.0
1445	Guscio	1319	1320	1377	1376	1	15.0
1446	Guscio	1320	1321	1378	1377	1	15.0
1447	Guscio	1321	1322	1379	1378	1	15.0
1448	Guscio	1322	1323	1380	1379	1	15.0
1449	Guscio	1323	1324	1381	1380	1	15.0
1450	Guscio	1324	1325	1382	1381	1	15.0
1451	Guscio	1325	1326	1383	1382	1	15.0
1452	Guscio	1326	1327	1384	1383	1	15.0
1453	Guscio	1327	1328	1385	1384	1	15.0
1454	Guscio	1328	1329	1386	1385	1	15.0
1455	Guscio	1329	1330	1387	1386	1	15.0
1456	Guscio	1330	1331	1388	1387	1	15.0
1457	Guscio	1331	1332	1389	1388	1	15.0
1458	Guscio	1332	1333	1390	1389	1	15.0
1459	Guscio	1333	1334	1391	1390	1	15.0
1460	Guscio	1334	1335	1392	1391	1	15.0
1461	Guscio	1335	1336	1393	1392	1	15.0
1462	Guscio	1336	1337	1394	1393	1	15.0
1463	Guscio	1337	1338	1395	1394	1	15.0
1464	Guscio	1338	1339	1396	1395	1	15.0
1465	Guscio	1339	1340	1397	1396	1	15.0
1466	Guscio	1340	1341	1398	1397	1	15.0
1467	Guscio	1341	1342	1399	1398	1	15.0
1468	Guscio	1342	1343	1400	1399	1	15.0
1469	Guscio	1343	1344	1401	1400	1	15.0
1470	Guscio	1344	1345	1402	1401	1	15.0
1471	Guscio	1345	1346	1403	1402	1	15.0
1472	Guscio	1346	1347	1404	1403	1	15.0
1473	Guscio	1347	1348	1405	1404	1	15.0
1474	Guscio	1348	1349	1406	1405	1	15.0
1475	Guscio	1349	1350	1407	1406	1	15.0
1476	Guscio	1350	1351	1408	1407	1	15.0
1477	Guscio	1351	1352	1409	1408	1	15.0
1478	Guscio	1352	1353	1410	1409	1	15.0
1479	Guscio	1353	1354	1411	1410	1	15.0
1480	Guscio	1354	1355	1412	1411	1	15.0
1481	Guscio	1355	1356	1413	1412	1	15.0
1482	Guscio	1356	1357	1414	1413	1	15.0
1483	Guscio	1357	1358	1415	1414	1	15.0
1484	Guscio	1358	1359	1416	1415	1	15.0
1485	Guscio	1359	1360	1417	1416	1	15.0
1486	Guscio	1361	1362	1419	1418	1	15.0
1487	Guscio	1362	1363	1420	1419	1	15.0
1488	Guscio	1363	1364	1421	1420	1	15.0
1489	Guscio	1364	1365	1422	1421	1	15.0
1490	Guscio	1365	1366	1423	1422	1	15.0
1491	Guscio	1366	1367	1424	1423	1	15.0
1492	Guscio	1367	1368	1425	1424	1	15.0
1493	Guscio	1368	1369	1426	1425	1	15.0
1494	Guscio	1369	1370	1427	1426	1	15.0
1495	Guscio	1370	1371	1428	1427	1	15.0
1496	Guscio	1371	1372	1429	1428	1	15.0
1497	Guscio	1372	1373	1430	1429	1	15.0
1498	Guscio	1373	1374	1431	1430	1	15.0
1499	Guscio	1374	1375	1432	1431	1	15.0
1500	Guscio	1375	1376	1433	1432	1	15.0
1501	Guscio	1376	1377	1434	1433	1	15.0
1502	Guscio	1377	1378	1435	1434	1	15.0
1503	Guscio	1378	1379	1436	1435	1	15.0
1504	Guscio	1379	1380	1437	1436	1	15.0
1505	Guscio	1380	1381	1438	1437	1	15.0
1506	Guscio	1381	1382	1439	1438	1	15.0
1507	Guscio	1382	1383	1440	1439	1	15.0
1508	Guscio	1383	1384	1441	1440	1	15.0
1509	Guscio	1384	1385	1442	1441	1	15.0
1510	Guscio	1385	1386	1443	1442	1	15.0
1511	Guscio	1386	1387	1444	1443	1	15.0
1512	Guscio	1387	1388	1445	1444	1	15.0
1513	Guscio	1388	1389	1446	1445	1	15.0
1514	Guscio	1389	1390	1447	1446	1	15.0
1515	Guscio	1390	1391	1448	1447	1	15.0
1516	Guscio	1391	1392	1449	1448	1	15.0

1517	Guscio	1392	1393	1450	1449	1	15.0
1518	Guscio	1393	1394	1451	1450	1	15.0
1519	Guscio	1394	1395	1452	1451	1	15.0
1520	Guscio	1395	1396	1453	1452	1	15.0
1521	Guscio	1396	1397	1454	1453	1	15.0
1522	Guscio	1397	1398	1455	1454	1	15.0
1523	Guscio	1398	1399	1456	1455	1	15.0
1524	Guscio	1399	1400	1457	1456	1	15.0
1525	Guscio	1400	1401	1458	1457	1	15.0
1526	Guscio	1401	1402	1459	1458	1	15.0
1527	Guscio	1402	1403	1460	1459	1	15.0
1528	Guscio	1403	1404	1461	1460	1	15.0
1529	Guscio	1404	1405	1462	1461	1	15.0
1530	Guscio	1405	1406	1463	1462	1	15.0
1531	Guscio	1406	1407	1464	1463	1	15.0
1532	Guscio	1407	1408	1465	1464	1	15.0
1533	Guscio	1408	1409	1466	1465	1	15.0
1534	Guscio	1409	1410	1467	1466	1	15.0
1535	Guscio	1410	1411	1468	1467	1	15.0
1536	Guscio	1411	1412	1469	1468	1	15.0
1537	Guscio	1412	1413	1470	1469	1	15.0
1538	Guscio	1413	1414	1471	1470	1	15.0
1539	Guscio	1414	1415	1472	1471	1	15.0
1540	Guscio	1415	1416	1473	1472	1	15.0
1541	Guscio	1416	1417	1474	1473	1	15.0
1542	Guscio	1418	1419	1476	1475	1	15.0
1543	Guscio	1419	1420	1477	1476	1	15.0
1544	Guscio	1420	1421	1478	1477	1	15.0
1545	Guscio	1421	1422	1479	1478	1	15.0
1546	Guscio	1422	1423	1480	1479	1	15.0
1547	Guscio	1423	1424	1481	1480	1	15.0
1548	Guscio	1424	1425	1482	1481	1	15.0
1549	Guscio	1425	1426	1483	1482	1	15.0
1550	Guscio	1426	1427	1484	1483	1	15.0
1551	Guscio	1427	1428	1485	1484	1	15.0
1552	Guscio	1428	1429	1486	1485	1	15.0
1553	Guscio	1429	1430	1487	1486	1	15.0
1554	Guscio	1430	1431	1488	1487	1	15.0
1555	Guscio	1431	1432	1489	1488	1	15.0
1556	Guscio	1432	1433	1490	1489	1	15.0
1557	Guscio	1433	1434	1491	1490	1	15.0
1558	Guscio	1434	1435	1492	1491	1	15.0
1559	Guscio	1435	1436	1493	1492	1	15.0
1560	Guscio	1436	1437	1494	1493	1	15.0
1561	Guscio	1437	1438	1495	1494	1	15.0
1562	Guscio	1438	1439	1496	1495	1	15.0
1563	Guscio	1439	1440	1497	1496	1	15.0
1564	Guscio	1440	1441	1498	1497	1	15.0
1565	Guscio	1441	1442	1499	1498	1	15.0
1566	Guscio	1442	1443	1500	1499	1	15.0
1567	Guscio	1443	1444	1501	1500	1	15.0
1568	Guscio	1444	1445	1502	1501	1	15.0
1569	Guscio	1445	1446	1503	1502	1	15.0
1570	Guscio	1446	1447	1504	1503	1	15.0
1571	Guscio	1447	1448	1505	1504	1	15.0
1572	Guscio	1448	1449	1506	1505	1	15.0
1573	Guscio	1449	1450	1507	1506	1	15.0
1574	Guscio	1450	1451	1508	1507	1	15.0
1575	Guscio	1451	1452	1509	1508	1	15.0
1576	Guscio	1452	1453	1510	1509	1	15.0
1577	Guscio	1453	1454	1511	1510	1	15.0
1578	Guscio	1454	1455	1512	1511	1	15.0
1579	Guscio	1455	1456	1513	1512	1	15.0
1580	Guscio	1456	1457	1514	1513	1	15.0
1581	Guscio	1457	1458	1515	1514	1	15.0
1582	Guscio	1458	1459	1516	1515	1	15.0
1583	Guscio	1459	1460	1517	1516	1	15.0
1584	Guscio	1460	1461	1518	1517	1	15.0
1585	Guscio	1461	1462	1519	1518	1	15.0
1586	Guscio	1462	1463	1520	1519	1	15.0
1587	Guscio	1463	1464	1521	1520	1	15.0
1588	Guscio	1464	1465	1522	1521	1	15.0
1589	Guscio	1465	1466	1523	1522	1	15.0
1590	Guscio	1466	1467	1524	1523	1	15.0
1591	Guscio	1467	1468	1525	1524	1	15.0
1592	Guscio	1468	1469	1526	1525	1	15.0
1593	Guscio	1469	1470	1527	1526	1	15.0
1594	Guscio	1470	1471	1528	1527	1	15.0
1595	Guscio	1471	1472	1529	1528	1	15.0

1596	Guscio	1472	1473	1530	1529	1	15.0
1597	Guscio	1473	1474	1531	1530	1	15.0
1598	Setto	1184	1190	1538	1532	1	15.0
1599	Setto	1185	1200	1543	1533	1	15.0
1600	Setto	1186	1212	1549	1534	1	15.0
1601	Setto	1187	1224	1555	1535	1	15.0
1602	Setto	1188	1236	1561	1536	1	15.0
1603	Setto	1189	1246	1566	1537	1	15.0
1604	Setto	1190	1247	1567	1538	1	15.0
1605	Setto	1192	1249	1568	1539	1	15.0
1606	Setto	1194	1251	1569	1540	1	15.0
1607	Setto	1196	1253	1570	1541	1	15.0
1608	Setto	1198	1255	1571	1542	1	15.0
1609	Setto	1200	1257	1572	1543	1	15.0
1610	Setto	1202	1259	1573	1544	1	15.0
1611	Setto	1204	1261	1574	1545	1	15.0
1612	Setto	1206	1263	1575	1546	1	15.0
1613	Setto	1208	1265	1576	1547	1	15.0
1614	Setto	1210	1267	1577	1548	1	15.0
1615	Setto	1212	1269	1578	1549	1	15.0
1616	Setto	1214	1271	1579	1550	1	15.0
1617	Setto	1216	1273	1580	1551	1	15.0
1618	Setto	1218	1275	1581	1552	1	15.0
1619	Setto	1220	1277	1582	1553	1	15.0
1620	Setto	1222	1279	1583	1554	1	15.0
1621	Setto	1224	1281	1584	1555	1	15.0
1622	Setto	1226	1283	1585	1556	1	15.0
1623	Setto	1228	1285	1586	1557	1	15.0
1624	Setto	1230	1287	1587	1558	1	15.0
1625	Setto	1232	1289	1588	1559	1	15.0
1626	Setto	1234	1291	1589	1560	1	15.0
1627	Setto	1236	1293	1590	1561	1	15.0
1628	Setto	1238	1295	1591	1562	1	15.0
1629	Setto	1240	1297	1592	1563	1	15.0
1630	Setto	1242	1299	1593	1564	1	15.0
1631	Setto	1244	1301	1594	1565	1	15.0
1632	Setto	1246	1303	1595	1566	1	15.0
1633	Setto	1247	1304	1596	1567	1	15.0
1634	Setto	1249	1306	1597	1568	1	15.0
1635	Setto	1251	1308	1598	1569	1	15.0
1636	Setto	1253	1310	1599	1570	1	15.0
1637	Setto	1255	1312	1600	1571	1	15.0
1638	Setto	1257	1314	1601	1572	1	15.0
1639	Setto	1259	1316	1602	1573	1	15.0
1640	Setto	1261	1318	1603	1574	1	15.0
1641	Setto	1263	1320	1604	1575	1	15.0
1642	Setto	1265	1322	1605	1576	1	15.0
1643	Setto	1267	1324	1606	1577	1	15.0
1644	Setto	1269	1326	1607	1578	1	15.0
1645	Setto	1271	1328	1608	1579	1	15.0
1646	Setto	1273	1330	1609	1580	1	15.0
1647	Setto	1275	1332	1610	1581	1	15.0
1648	Setto	1277	1334	1611	1582	1	15.0
1649	Setto	1279	1336	1612	1583	1	15.0
1650	Setto	1281	1338	1613	1584	1	15.0
1651	Setto	1283	1340	1614	1585	1	15.0
1652	Setto	1285	1342	1615	1586	1	15.0
1653	Setto	1287	1344	1616	1587	1	15.0
1654	Setto	1289	1346	1617	1588	1	15.0
1655	Setto	1291	1348	1618	1589	1	15.0
1656	Setto	1293	1350	1619	1590	1	15.0
1657	Setto	1295	1352	1620	1591	1	15.0
1658	Setto	1297	1354	1621	1592	1	15.0
1659	Setto	1299	1356	1622	1593	1	15.0
1660	Setto	1301	1358	1623	1594	1	15.0
1661	Setto	1303	1360	1624	1595	1	15.0
1662	Setto	1304	1361	1625	1596	1	15.0
1663	Setto	1306	1363	1626	1597	1	15.0
1664	Setto	1308	1365	1627	1598	1	15.0
1665	Setto	1310	1367	1628	1599	1	15.0
1666	Setto	1312	1369	1629	1600	1	15.0
1667	Setto	1314	1371	1630	1601	1	15.0
1668	Setto	1316	1373	1631	1602	1	15.0
1669	Setto	1318	1375	1632	1603	1	15.0
1670	Setto	1320	1377	1633	1604	1	15.0
1671	Setto	1322	1379	1634	1605	1	15.0
1672	Setto	1324	1381	1635	1606	1	15.0
1673	Setto	1326	1383	1636	1607	1	15.0
1674	Setto	1328	1385	1637	1608	1	15.0

1675	Setto	1330	1387	1638	1609	1	15.0
1676	Setto	1332	1389	1639	1610	1	15.0
1677	Setto	1334	1391	1640	1611	1	15.0
1678	Setto	1336	1393	1641	1612	1	15.0
1679	Setto	1338	1395	1642	1613	1	15.0
1680	Setto	1340	1397	1643	1614	1	15.0
1681	Setto	1342	1399	1644	1615	1	15.0
1682	Setto	1344	1401	1645	1616	1	15.0
1683	Setto	1346	1403	1646	1617	1	15.0
1684	Setto	1348	1405	1647	1618	1	15.0
1685	Setto	1350	1407	1648	1619	1	15.0
1686	Setto	1352	1409	1649	1620	1	15.0
1687	Setto	1354	1411	1650	1621	1	15.0
1688	Setto	1356	1413	1651	1622	1	15.0
1689	Setto	1358	1415	1652	1623	1	15.0
1690	Setto	1360	1417	1653	1624	1	15.0
1691	Setto	1361	1418	1654	1625	1	15.0
1692	Setto	1363	1420	1655	1626	1	15.0
1693	Setto	1365	1422	1656	1627	1	15.0
1694	Setto	1367	1424	1657	1628	1	15.0
1695	Setto	1369	1426	1658	1629	1	15.0
1696	Setto	1371	1428	1659	1630	1	15.0
1697	Setto	1373	1430	1660	1631	1	15.0
1698	Setto	1375	1432	1661	1632	1	15.0
1699	Setto	1377	1434	1662	1633	1	15.0
1700	Setto	1379	1436	1663	1634	1	15.0
1701	Setto	1381	1438	1664	1635	1	15.0
1702	Setto	1383	1440	1665	1636	1	15.0
1703	Setto	1385	1442	1666	1637	1	15.0
1704	Setto	1387	1444	1667	1638	1	15.0
1705	Setto	1389	1446	1668	1639	1	15.0
1706	Setto	1391	1448	1669	1640	1	15.0
1707	Setto	1393	1450	1670	1641	1	15.0
1708	Setto	1395	1452	1671	1642	1	15.0
1709	Setto	1397	1454	1672	1643	1	15.0
1710	Setto	1399	1456	1673	1644	1	15.0
1711	Setto	1401	1458	1674	1645	1	15.0
1712	Setto	1403	1460	1675	1646	1	15.0
1713	Setto	1405	1462	1676	1647	1	15.0
1714	Setto	1407	1464	1677	1648	1	15.0
1715	Setto	1409	1466	1678	1649	1	15.0
1716	Setto	1411	1468	1679	1650	1	15.0
1717	Setto	1413	1470	1680	1651	1	15.0
1718	Setto	1415	1472	1681	1652	1	15.0
1719	Setto	1417	1474	1682	1653	1	15.0
1720	Setto	1418	1475	1683	1654	1	15.0
1721	Setto	1420	1477	1685	1655	1	15.0
1722	Setto	1422	1479	1687	1656	1	15.0
1723	Setto	1424	1481	1689	1657	1	15.0
1724	Setto	1426	1483	1691	1658	1	15.0
1725	Setto	1428	1485	1693	1659	1	15.0
1726	Setto	1430	1487	1695	1660	1	15.0
1727	Setto	1432	1489	1697	1661	1	15.0
1728	Setto	1434	1491	1699	1662	1	15.0
1729	Setto	1436	1493	1701	1663	1	15.0
1730	Setto	1438	1495	1703	1664	1	15.0
1731	Setto	1440	1497	1705	1665	1	15.0
1732	Setto	1442	1499	1707	1666	1	15.0
1733	Setto	1444	1501	1709	1667	1	15.0
1734	Setto	1446	1503	1711	1668	1	15.0
1735	Setto	1448	1505	1713	1669	1	15.0
1736	Setto	1450	1507	1715	1670	1	15.0
1737	Setto	1452	1509	1717	1671	1	15.0
1738	Setto	1454	1511	1719	1672	1	15.0
1739	Setto	1456	1513	1721	1673	1	15.0
1740	Setto	1458	1515	1723	1674	1	15.0
1741	Setto	1460	1517	1725	1675	1	15.0
1742	Setto	1462	1519	1727	1676	1	15.0
1743	Setto	1464	1521	1729	1677	1	15.0
1744	Setto	1466	1523	1731	1678	1	15.0
1745	Setto	1468	1525	1733	1679	1	15.0
1746	Setto	1470	1527	1735	1680	1	15.0
1747	Setto	1472	1529	1737	1681	1	15.0
1748	Setto	1474	1531	1739	1682	1	15.0
1749	Setto	1683	1684	1476	1475	1	15.0
1750	Setto	1684	1685	1477	1476	1	15.0
1751	Setto	1685	1686	1478	1477	1	15.0
1752	Setto	1686	1687	1479	1478	1	15.0
1753	Setto	1687	1688	1480	1479	1	15.0

1754	Setto	1688	1689	1481	1480	1	15.0
1755	Setto	1689	1690	1482	1481	1	15.0
1756	Setto	1690	1691	1483	1482	1	15.0
1757	Setto	1691	1692	1484	1483	1	15.0
1758	Setto	1692	1693	1485	1484	1	15.0
1759	Setto	1693	1694	1486	1485	1	15.0
1760	Setto	1694	1695	1487	1486	1	15.0
1761	Setto	1695	1696	1488	1487	1	15.0
1762	Setto	1696	1697	1489	1488	1	15.0
1763	Setto	1697	1698	1490	1489	1	15.0
1764	Setto	1698	1699	1491	1490	1	15.0
1765	Setto	1699	1700	1492	1491	1	15.0
1766	Setto	1700	1701	1493	1492	1	15.0
1767	Setto	1701	1702	1494	1493	1	15.0
1768	Setto	1702	1703	1495	1494	1	15.0
1769	Setto	1703	1704	1496	1495	1	15.0
1770	Setto	1704	1705	1497	1496	1	15.0
1771	Setto	1705	1706	1498	1497	1	15.0
1772	Setto	1706	1707	1499	1498	1	15.0
1773	Setto	1707	1708	1500	1499	1	15.0
1774	Setto	1708	1709	1501	1500	1	15.0
1775	Setto	1709	1710	1502	1501	1	15.0
1776	Setto	1710	1711	1503	1502	1	15.0
1777	Setto	1711	1712	1504	1503	1	15.0
1778	Setto	1712	1713	1505	1504	1	15.0
1779	Setto	1713	1714	1506	1505	1	15.0
1780	Setto	1714	1715	1507	1506	1	15.0
1781	Setto	1715	1716	1508	1507	1	15.0
1782	Setto	1716	1717	1509	1508	1	15.0
1783	Setto	1717	1718	1510	1509	1	15.0
1784	Setto	1718	1719	1511	1510	1	15.0
1785	Setto	1719	1720	1512	1511	1	15.0
1786	Setto	1720	1721	1513	1512	1	15.0
1787	Setto	1721	1722	1514	1513	1	15.0
1788	Setto	1722	1723	1515	1514	1	15.0
1789	Setto	1723	1724	1516	1515	1	15.0
1790	Setto	1724	1725	1517	1516	1	15.0
1791	Setto	1725	1726	1518	1517	1	15.0
1792	Setto	1726	1727	1519	1518	1	15.0
1793	Setto	1727	1728	1520	1519	1	15.0
1794	Setto	1728	1729	1521	1520	1	15.0
1795	Setto	1729	1730	1522	1521	1	15.0
1796	Setto	1730	1731	1523	1522	1	15.0
1797	Setto	1731	1732	1524	1523	1	15.0
1798	Setto	1732	1733	1525	1524	1	15.0
1799	Setto	1733	1734	1526	1525	1	15.0
1800	Setto	1734	1735	1527	1526	1	15.0
1801	Setto	1735	1736	1528	1527	1	15.0
1802	Setto	1736	1737	1529	1528	1	15.0
1803	Setto	1737	1738	1530	1529	1	15.0
1804	Setto	1738	1739	1531	1530	1	15.0
1805	Setto	1532	1538	1746	1740	1	15.0
1806	Setto	1533	1543	1751	1741	1	15.0
1807	Setto	1534	1549	1757	1742	1	15.0
1808	Setto	1535	1555	1763	1743	1	15.0
1809	Setto	1536	1561	1769	1744	1	15.0
1810	Setto	1537	1566	1774	1745	1	15.0
1811	Setto	1538	1567	1775	1746	1	15.0
1812	Setto	1539	1568	1776	1747	1	15.0
1813	Setto	1540	1569	1777	1748	1	15.0
1814	Setto	1541	1570	1778	1749	1	15.0
1815	Setto	1542	1571	1779	1750	1	15.0
1816	Setto	1543	1572	1780	1751	1	15.0
1817	Setto	1544	1573	1781	1752	1	15.0
1818	Setto	1545	1574	1782	1753	1	15.0
1819	Setto	1546	1575	1783	1754	1	15.0
1820	Setto	1547	1576	1784	1755	1	15.0
1821	Setto	1548	1577	1785	1756	1	15.0
1822	Setto	1549	1578	1786	1757	1	15.0
1823	Setto	1550	1579	1787	1758	1	15.0
1824	Setto	1551	1580	1788	1759	1	15.0
1825	Setto	1552	1581	1789	1760	1	15.0
1826	Setto	1553	1582	1790	1761	1	15.0
1827	Setto	1554	1583	1791	1762	1	15.0
1828	Setto	1555	1584	1792	1763	1	15.0
1829	Setto	1556	1585	1793	1764	1	15.0
1830	Setto	1557	1586	1794	1765	1	15.0
1831	Setto	1558	1587	1795	1766	1	15.0
1832	Setto	1559	1588	1796	1767	1	15.0

1833	Setto	1560	1589	1797	1768	1	15.0
1834	Setto	1561	1590	1798	1769	1	15.0
1835	Setto	1562	1591	1799	1770	1	15.0
1836	Setto	1563	1592	1800	1771	1	15.0
1837	Setto	1564	1593	1801	1772	1	15.0
1838	Setto	1565	1594	1802	1773	1	15.0
1839	Setto	1566	1595	1803	1774	1	15.0
1840	Setto	1567	1596	1804	1775	1	15.0
1841	Setto	1568	1597	1805	1776	1	15.0
1842	Setto	1569	1598	1806	1777	1	15.0
1843	Setto	1570	1599	1807	1778	1	15.0
1844	Setto	1571	1600	1808	1779	1	15.0
1845	Setto	1572	1601	1809	1780	1	15.0
1846	Setto	1573	1602	1810	1781	1	15.0
1847	Setto	1574	1603	1811	1782	1	15.0
1848	Setto	1575	1604	1812	1783	1	15.0
1849	Setto	1576	1605	1813	1784	1	15.0
1850	Setto	1577	1606	1814	1785	1	15.0
1851	Setto	1578	1607	1815	1786	1	15.0
1852	Setto	1579	1608	1816	1787	1	15.0
1853	Setto	1580	1609	1817	1788	1	15.0
1854	Setto	1581	1610	1818	1789	1	15.0
1855	Setto	1582	1611	1819	1790	1	15.0
1856	Setto	1583	1612	1820	1791	1	15.0
1857	Setto	1584	1613	1821	1792	1	15.0
1858	Setto	1585	1614	1822	1793	1	15.0
1859	Setto	1586	1615	1823	1794	1	15.0
1860	Setto	1587	1616	1824	1795	1	15.0
1861	Setto	1588	1617	1825	1796	1	15.0
1862	Setto	1589	1618	1826	1797	1	15.0
1863	Setto	1590	1619	1827	1798	1	15.0
1864	Setto	1591	1620	1828	1799	1	15.0
1865	Setto	1592	1621	1829	1800	1	15.0
1866	Setto	1593	1622	1830	1801	1	15.0
1867	Setto	1594	1623	1831	1802	1	15.0
1868	Setto	1595	1624	1832	1803	1	15.0
1869	Setto	1596	1625	1833	1804	1	15.0
1870	Setto	1597	1626	1834	1805	1	15.0
1871	Setto	1598	1627	1835	1806	1	15.0
1872	Setto	1599	1628	1836	1807	1	15.0
1873	Setto	1600	1629	1837	1808	1	15.0
1874	Setto	1601	1630	1838	1809	1	15.0
1875	Setto	1602	1631	1839	1810	1	15.0
1876	Setto	1603	1632	1840	1811	1	15.0
1877	Setto	1604	1633	1841	1812	1	15.0
1878	Setto	1605	1634	1842	1813	1	15.0
1879	Setto	1606	1635	1843	1814	1	15.0
1880	Setto	1607	1636	1844	1815	1	15.0
1881	Setto	1608	1637	1845	1816	1	15.0
1882	Setto	1609	1638	1846	1817	1	15.0
1883	Setto	1610	1639	1847	1818	1	15.0
1884	Setto	1611	1640	1848	1819	1	15.0
1885	Setto	1612	1641	1849	1820	1	15.0
1886	Setto	1613	1642	1850	1821	1	15.0
1887	Setto	1614	1643	1851	1822	1	15.0
1888	Setto	1615	1644	1852	1823	1	15.0
1889	Setto	1616	1645	1853	1824	1	15.0
1890	Setto	1617	1646	1854	1825	1	15.0
1891	Setto	1618	1647	1855	1826	1	15.0
1892	Setto	1619	1648	1856	1827	1	15.0
1893	Setto	1620	1649	1857	1828	1	15.0
1894	Setto	1621	1650	1858	1829	1	15.0
1895	Setto	1622	1651	1859	1830	1	15.0
1896	Setto	1623	1652	1860	1831	1	15.0
1897	Setto	1624	1653	1861	1832	1	15.0
1898	Setto	1625	1654	1862	1833	1	15.0
1899	Setto	1626	1655	1863	1834	1	15.0
1900	Setto	1627	1656	1864	1835	1	15.0
1901	Setto	1628	1657	1865	1836	1	15.0
1902	Setto	1629	1658	1866	1837	1	15.0
1903	Setto	1630	1659	1867	1838	1	15.0
1904	Setto	1631	1660	1868	1839	1	15.0
1905	Setto	1632	1661	1869	1840	1	15.0
1906	Setto	1633	1662	1870	1841	1	15.0
1907	Setto	1634	1663	1871	1842	1	15.0
1908	Setto	1635	1664	1872	1843	1	15.0
1909	Setto	1636	1665	1873	1844	1	15.0
1910	Setto	1637	1666	1874	1845	1	15.0
1911	Setto	1638	1667	1875	1846	1	15.0

1912	Setto	1639	1668	1876	1847	1	15.0
1913	Setto	1640	1669	1877	1848	1	15.0
1914	Setto	1641	1670	1878	1849	1	15.0
1915	Setto	1642	1671	1879	1850	1	15.0
1916	Setto	1643	1672	1880	1851	1	15.0
1917	Setto	1644	1673	1881	1852	1	15.0
1918	Setto	1645	1674	1882	1853	1	15.0
1919	Setto	1646	1675	1883	1854	1	15.0
1920	Setto	1647	1676	1884	1855	1	15.0
1921	Setto	1648	1677	1885	1856	1	15.0
1922	Setto	1649	1678	1886	1857	1	15.0
1923	Setto	1650	1679	1887	1858	1	15.0
1924	Setto	1651	1680	1888	1859	1	15.0
1925	Setto	1652	1681	1889	1860	1	15.0
1926	Setto	1653	1682	1890	1861	1	15.0
1927	Setto	1654	1683	1891	1862	1	15.0
1928	Setto	1655	1685	1893	1863	1	15.0
1929	Setto	1656	1687	1895	1864	1	15.0
1930	Setto	1657	1689	1897	1865	1	15.0
1931	Setto	1658	1691	1899	1866	1	15.0
1932	Setto	1659	1693	1901	1867	1	15.0
1933	Setto	1660	1695	1903	1868	1	15.0
1934	Setto	1661	1697	1905	1869	1	15.0
1935	Setto	1662	1699	1907	1870	1	15.0
1936	Setto	1663	1701	1909	1871	1	15.0
1937	Setto	1664	1703	1911	1872	1	15.0
1938	Setto	1665	1705	1913	1873	1	15.0
1939	Setto	1666	1707	1915	1874	1	15.0
1940	Setto	1667	1709	1917	1875	1	15.0
1941	Setto	1668	1711	1919	1876	1	15.0
1942	Setto	1669	1713	1921	1877	1	15.0
1943	Setto	1670	1715	1923	1878	1	15.0
1944	Setto	1671	1717	1925	1879	1	15.0
1945	Setto	1672	1719	1927	1880	1	15.0
1946	Setto	1673	1721	1929	1881	1	15.0
1947	Setto	1674	1723	1931	1882	1	15.0
1948	Setto	1675	1725	1933	1883	1	15.0
1949	Setto	1676	1727	1935	1884	1	15.0
1950	Setto	1677	1729	1937	1885	1	15.0
1951	Setto	1678	1731	1939	1886	1	15.0
1952	Setto	1679	1733	1941	1887	1	15.0
1953	Setto	1680	1735	1943	1888	1	15.0
1954	Setto	1681	1737	1945	1889	1	15.0
1955	Setto	1682	1739	1947	1890	1	15.0
1956	Setto	1891	1892	1684	1683	1	15.0
1957	Setto	1892	1893	1685	1684	1	15.0
1958	Setto	1893	1894	1686	1685	1	15.0
1959	Setto	1894	1895	1687	1686	1	15.0
1960	Setto	1895	1896	1688	1687	1	15.0
1961	Setto	1896	1897	1689	1688	1	15.0
1962	Setto	1897	1898	1690	1689	1	15.0
1963	Setto	1898	1899	1691	1690	1	15.0
1964	Setto	1899	1900	1692	1691	1	15.0
1965	Setto	1900	1901	1693	1692	1	15.0
1966	Setto	1901	1902	1694	1693	1	15.0
1967	Setto	1902	1903	1695	1694	1	15.0
1968	Setto	1903	1904	1696	1695	1	15.0
1969	Setto	1904	1905	1697	1696	1	15.0
1970	Setto	1905	1906	1698	1697	1	15.0
1971	Setto	1906	1907	1699	1698	1	15.0
1972	Setto	1907	1908	1700	1699	1	15.0
1973	Setto	1908	1909	1701	1700	1	15.0
1974	Setto	1909	1910	1702	1701	1	15.0
1975	Setto	1910	1911	1703	1702	1	15.0
1976	Setto	1911	1912	1704	1703	1	15.0
1977	Setto	1912	1913	1705	1704	1	15.0
1978	Setto	1913	1914	1706	1705	1	15.0
1979	Setto	1914	1915	1707	1706	1	15.0
1980	Setto	1915	1916	1708	1707	1	15.0
1981	Setto	1916	1917	1709	1708	1	15.0
1982	Setto	1917	1918	1710	1709	1	15.0
1983	Setto	1918	1919	1711	1710	1	15.0
1984	Setto	1919	1920	1712	1711	1	15.0
1985	Setto	1920	1921	1713	1712	1	15.0
1986	Setto	1921	1922	1714	1713	1	15.0
1987	Setto	1922	1923	1715	1714	1	15.0
1988	Setto	1923	1924	1716	1715	1	15.0
1989	Setto	1924	1925	1717	1716	1	15.0
1990	Setto	1925	1926	1718	1717	1	15.0

1991	Setto	1926	1927	1719	1718	1	15.0
1992	Setto	1927	1928	1720	1719	1	15.0
1993	Setto	1928	1929	1721	1720	1	15.0
1994	Setto	1929	1930	1722	1721	1	15.0
1995	Setto	1930	1931	1723	1722	1	15.0
1996	Setto	1931	1932	1724	1723	1	15.0
1997	Setto	1932	1933	1725	1724	1	15.0
1998	Setto	1933	1934	1726	1725	1	15.0
1999	Setto	1934	1935	1727	1726	1	15.0
2000	Setto	1935	1936	1728	1727	1	15.0
2001	Setto	1936	1937	1729	1728	1	15.0
2002	Setto	1937	1938	1730	1729	1	15.0
2003	Setto	1938	1939	1731	1730	1	15.0
2004	Setto	1939	1940	1732	1731	1	15.0
2005	Setto	1940	1941	1733	1732	1	15.0
2006	Setto	1941	1942	1734	1733	1	15.0
2007	Setto	1942	1943	1735	1734	1	15.0
2008	Setto	1943	1944	1736	1735	1	15.0
2009	Setto	1944	1945	1737	1736	1	15.0
2010	Setto	1945	1946	1738	1737	1	15.0
2011	Setto	1946	1947	1739	1738	1	15.0
2012	Setto	1740	1746	1954	1948	1	15.0
2013	Setto	1741	1751	1964	1949	1	15.0
2014	Setto	1742	1757	1976	1950	1	15.0
2015	Setto	1743	1763	1988	1951	1	15.0
2016	Setto	1744	1769	2000	1952	1	15.0
2017	Setto	1745	1774	2010	1953	1	15.0
2018	Setto	1746	1775	2011	1954	1	15.0
2019	Setto	1747	1776	2013	1956	1	15.0
2020	Setto	1748	1777	2015	1958	1	15.0
2021	Setto	1749	1778	2017	1960	1	15.0
2022	Setto	1750	1779	2019	1962	1	15.0
2023	Setto	1751	1780	2021	1964	1	15.0
2024	Setto	1752	1781	2023	1966	1	15.0
2025	Setto	1753	1782	2025	1968	1	15.0
2026	Setto	1754	1783	2027	1970	1	15.0
2027	Setto	1755	1784	2029	1972	1	15.0
2028	Setto	1756	1785	2031	1974	1	15.0
2029	Setto	1757	1786	2033	1976	1	15.0
2030	Setto	1758	1787	2035	1978	1	15.0
2031	Setto	1759	1788	2037	1980	1	15.0
2032	Setto	1760	1789	2039	1982	1	15.0
2033	Setto	1761	1790	2041	1984	1	15.0
2034	Setto	1762	1791	2043	1986	1	15.0
2035	Setto	1763	1792	2045	1988	1	15.0
2036	Setto	1764	1793	2047	1990	1	15.0
2037	Setto	1765	1794	2049	1992	1	15.0
2038	Setto	1766	1795	2051	1994	1	15.0
2039	Setto	1767	1796	2053	1996	1	15.0
2040	Setto	1768	1797	2055	1998	1	15.0
2041	Setto	1769	1798	2057	2000	1	15.0
2042	Setto	1770	1799	2059	2002	1	15.0
2043	Setto	1771	1800	2061	2004	1	15.0
2044	Setto	1772	1801	2063	2006	1	15.0
2045	Setto	1773	1802	2065	2008	1	15.0
2046	Setto	1774	1803	2067	2010	1	15.0
2047	Setto	1775	1804	2068	2011	1	15.0
2048	Setto	1776	1805	2070	2013	1	15.0
2049	Setto	1777	1806	2072	2015	1	15.0
2050	Setto	1778	1807	2074	2017	1	15.0
2051	Setto	1779	1808	2076	2019	1	15.0
2052	Setto	1780	1809	2078	2021	1	15.0
2053	Setto	1781	1810	2080	2023	1	15.0
2054	Setto	1782	1811	2082	2025	1	15.0
2055	Setto	1783	1812	2084	2027	1	15.0
2056	Setto	1784	1813	2086	2029	1	15.0
2057	Setto	1785	1814	2088	2031	1	15.0
2058	Setto	1786	1815	2090	2033	1	15.0
2059	Setto	1787	1816	2092	2035	1	15.0
2060	Setto	1788	1817	2094	2037	1	15.0
2061	Setto	1789	1818	2096	2039	1	15.0
2062	Setto	1790	1819	2098	2041	1	15.0
2063	Setto	1791	1820	2100	2043	1	15.0
2064	Setto	1792	1821	2102	2045	1	15.0
2065	Setto	1793	1822	2104	2047	1	15.0
2066	Setto	1794	1823	2106	2049	1	15.0
2067	Setto	1795	1824	2108	2051	1	15.0
2068	Setto	1796	1825	2110	2053	1	15.0
2069	Setto	1797	1826	2112	2055	1	15.0

2070	Setto	1798	1827	2114	2057	1	15.0
2071	Setto	1799	1828	2116	2059	1	15.0
2072	Setto	1800	1829	2118	2061	1	15.0
2073	Setto	1801	1830	2120	2063	1	15.0
2074	Setto	1802	1831	2122	2065	1	15.0
2075	Setto	1803	1832	2124	2067	1	15.0
2076	Setto	1804	1833	2125	2068	1	15.0
2077	Setto	1805	1834	2127	2070	1	15.0
2078	Setto	1806	1835	2129	2072	1	15.0
2079	Setto	1807	1836	2131	2074	1	15.0
2080	Setto	1808	1837	2133	2076	1	15.0
2081	Setto	1809	1838	2135	2078	1	15.0
2082	Setto	1810	1839	2137	2080	1	15.0
2083	Setto	1811	1840	2139	2082	1	15.0
2084	Setto	1812	1841	2141	2084	1	15.0
2085	Setto	1813	1842	2143	2086	1	15.0
2086	Setto	1814	1843	2145	2088	1	15.0
2087	Setto	1815	1844	2147	2090	1	15.0
2088	Setto	1816	1845	2149	2092	1	15.0
2089	Setto	1817	1846	2151	2094	1	15.0
2090	Setto	1818	1847	2153	2096	1	15.0
2091	Setto	1819	1848	2155	2098	1	15.0
2092	Setto	1820	1849	2157	2100	1	15.0
2093	Setto	1821	1850	2159	2102	1	15.0
2094	Setto	1822	1851	2161	2104	1	15.0
2095	Setto	1823	1852	2163	2106	1	15.0
2096	Setto	1824	1853	2165	2108	1	15.0
2097	Setto	1825	1854	2167	2110	1	15.0
2098	Setto	1826	1855	2169	2112	1	15.0
2099	Setto	1827	1856	2171	2114	1	15.0
2100	Setto	1828	1857	2173	2116	1	15.0
2101	Setto	1829	1858	2175	2118	1	15.0
2102	Setto	1830	1859	2177	2120	1	15.0
2103	Setto	1831	1860	2179	2122	1	15.0
2104	Setto	1832	1861	2181	2124	1	15.0
2105	Setto	1833	1862	2182	2125	1	15.0
2106	Setto	1834	1863	2184	2127	1	15.0
2107	Setto	1835	1864	2186	2129	1	15.0
2108	Setto	1836	1865	2188	2131	1	15.0
2109	Setto	1837	1866	2190	2133	1	15.0
2110	Setto	1838	1867	2192	2135	1	15.0
2111	Setto	1839	1868	2194	2137	1	15.0
2112	Setto	1840	1869	2196	2139	1	15.0
2113	Setto	1841	1870	2198	2141	1	15.0
2114	Setto	1842	1871	2200	2143	1	15.0
2115	Setto	1843	1872	2202	2145	1	15.0
2116	Setto	1844	1873	2204	2147	1	15.0
2117	Setto	1845	1874	2206	2149	1	15.0
2118	Setto	1846	1875	2208	2151	1	15.0
2119	Setto	1847	1876	2210	2153	1	15.0
2120	Setto	1848	1877	2212	2155	1	15.0
2121	Setto	1849	1878	2214	2157	1	15.0
2122	Setto	1850	1879	2216	2159	1	15.0
2123	Setto	1851	1880	2218	2161	1	15.0
2124	Setto	1852	1881	2220	2163	1	15.0
2125	Setto	1853	1882	2222	2165	1	15.0
2126	Setto	1854	1883	2224	2167	1	15.0
2127	Setto	1855	1884	2226	2169	1	15.0
2128	Setto	1856	1885	2228	2171	1	15.0
2129	Setto	1857	1886	2230	2173	1	15.0
2130	Setto	1858	1887	2232	2175	1	15.0
2131	Setto	1859	1888	2234	2177	1	15.0
2132	Setto	1860	1889	2236	2179	1	15.0
2133	Setto	1861	1890	2238	2181	1	15.0
2134	Setto	1862	1891	2239	2182	1	15.0
2135	Setto	1863	1893	2241	2184	1	15.0
2136	Setto	1864	1895	2243	2186	1	15.0
2137	Setto	1865	1897	2245	2188	1	15.0
2138	Setto	1866	1899	2247	2190	1	15.0
2139	Setto	1867	1901	2249	2192	1	15.0
2140	Setto	1868	1903	2251	2194	1	15.0
2141	Setto	1869	1905	2253	2196	1	15.0
2142	Setto	1870	1907	2255	2198	1	15.0
2143	Setto	1871	1909	2257	2200	1	15.0
2144	Setto	1872	1911	2259	2202	1	15.0
2145	Setto	1873	1913	2261	2204	1	15.0
2146	Setto	1874	1915	2263	2206	1	15.0
2147	Setto	1875	1917	2265	2208	1	15.0
2148	Setto	1876	1919	2267	2210	1	15.0

2149	Setto	1877	1921	2269	2212	1	15.0
2150	Setto	1878	1923	2271	2214	1	15.0
2151	Setto	1879	1925	2273	2216	1	15.0
2152	Setto	1880	1927	2275	2218	1	15.0
2153	Setto	1881	1929	2277	2220	1	15.0
2154	Setto	1882	1931	2279	2222	1	15.0
2155	Setto	1883	1933	2281	2224	1	15.0
2156	Setto	1884	1935	2283	2226	1	15.0
2157	Setto	1885	1937	2285	2228	1	15.0
2158	Setto	1886	1939	2287	2230	1	15.0
2159	Setto	1887	1941	2289	2232	1	15.0
2160	Setto	1888	1943	2291	2234	1	15.0
2161	Setto	1889	1945	2293	2236	1	15.0
2162	Setto	1890	1947	2295	2238	1	15.0
2163	Setto	2239	2240	1892	1891	1	15.0
2164	Setto	2240	2241	1893	1892	1	15.0
2165	Setto	2241	2242	1894	1893	1	15.0
2166	Setto	2242	2243	1895	1894	1	15.0
2167	Setto	2243	2244	1896	1895	1	15.0
2168	Setto	2244	2245	1897	1896	1	15.0
2169	Setto	2245	2246	1898	1897	1	15.0
2170	Setto	2246	2247	1899	1898	1	15.0
2171	Setto	2247	2248	1900	1899	1	15.0
2172	Setto	2248	2249	1901	1900	1	15.0
2173	Setto	2249	2250	1902	1901	1	15.0
2174	Setto	2250	2251	1903	1902	1	15.0
2175	Setto	2251	2252	1904	1903	1	15.0
2176	Setto	2252	2253	1905	1904	1	15.0
2177	Setto	2253	2254	1906	1905	1	15.0
2178	Setto	2254	2255	1907	1906	1	15.0
2179	Setto	2255	2256	1908	1907	1	15.0
2180	Setto	2256	2257	1909	1908	1	15.0
2181	Setto	2257	2258	1910	1909	1	15.0
2182	Setto	2258	2259	1911	1910	1	15.0
2183	Setto	2259	2260	1912	1911	1	15.0
2184	Setto	2260	2261	1913	1912	1	15.0
2185	Setto	2261	2262	1914	1913	1	15.0
2186	Setto	2262	2263	1915	1914	1	15.0
2187	Setto	2263	2264	1916	1915	1	15.0
2188	Setto	2264	2265	1917	1916	1	15.0
2189	Setto	2265	2266	1918	1917	1	15.0
2190	Setto	2266	2267	1919	1918	1	15.0
2191	Setto	2267	2268	1920	1919	1	15.0
2192	Setto	2268	2269	1921	1920	1	15.0
2193	Setto	2269	2270	1922	1921	1	15.0
2194	Setto	2270	2271	1923	1922	1	15.0
2195	Setto	2271	2272	1924	1923	1	15.0
2196	Setto	2272	2273	1925	1924	1	15.0
2197	Setto	2273	2274	1926	1925	1	15.0
2198	Setto	2274	2275	1927	1926	1	15.0
2199	Setto	2275	2276	1928	1927	1	15.0
2200	Setto	2276	2277	1929	1928	1	15.0
2201	Setto	2277	2278	1930	1929	1	15.0
2202	Setto	2278	2279	1931	1930	1	15.0
2203	Setto	2279	2280	1932	1931	1	15.0
2204	Setto	2280	2281	1933	1932	1	15.0
2205	Setto	2281	2282	1934	1933	1	15.0
2206	Setto	2282	2283	1935	1934	1	15.0
2207	Setto	2283	2284	1936	1935	1	15.0
2208	Setto	2284	2285	1937	1936	1	15.0
2209	Setto	2285	2286	1938	1937	1	15.0
2210	Setto	2286	2287	1939	1938	1	15.0
2211	Setto	2287	2288	1940	1939	1	15.0
2212	Setto	2288	2289	1941	1940	1	15.0
2213	Setto	2289	2290	1942	1941	1	15.0
2214	Setto	2290	2291	1943	1942	1	15.0
2215	Setto	2291	2292	1944	1943	1	15.0
2216	Setto	2292	2293	1945	1944	1	15.0
2217	Setto	2293	2294	1946	1945	1	15.0
2218	Setto	2294	2295	1947	1946	1	15.0
2219	Guscio	1954	1955	2012	2011	1	15.0
2220	Guscio	1955	1956	2013	2012	1	15.0
2221	Guscio	1956	1957	2014	2013	1	15.0
2222	Guscio	1957	1958	2015	2014	1	15.0
2223	Guscio	1958	1959	2016	2015	1	15.0
2224	Guscio	1959	1960	2017	2016	1	15.0
2225	Guscio	1960	1961	2018	2017	1	15.0
2226	Guscio	1961	1962	2019	2018	1	15.0
2227	Guscio	1962	1963	2020	2019	1	15.0

2228	Guscio	1963	1964	2021	2020	1	15.0
2229	Guscio	1964	1965	2022	2021	1	15.0
2230	Guscio	1965	1966	2023	2022	1	15.0
2231	Guscio	1966	1967	2024	2023	1	15.0
2232	Guscio	1967	1968	2025	2024	1	15.0
2233	Guscio	1968	1969	2026	2025	1	15.0
2234	Guscio	1969	1970	2027	2026	1	15.0
2235	Guscio	1970	1971	2028	2027	1	15.0
2236	Guscio	1971	1972	2029	2028	1	15.0
2237	Guscio	1972	1973	2030	2029	1	15.0
2238	Guscio	1973	1974	2031	2030	1	15.0
2239	Guscio	1974	1975	2032	2031	1	15.0
2240	Guscio	1975	1976	2033	2032	1	15.0
2241	Guscio	1976	1977	2034	2033	1	15.0
2242	Guscio	1977	1978	2035	2034	1	15.0
2243	Guscio	1978	1979	2036	2035	1	15.0
2244	Guscio	1979	1980	2037	2036	1	15.0
2245	Guscio	1980	1981	2038	2037	1	15.0
2246	Guscio	1981	1982	2039	2038	1	15.0
2247	Guscio	1982	1983	2040	2039	1	15.0
2248	Guscio	1983	1984	2041	2040	1	15.0
2249	Guscio	1984	1985	2042	2041	1	15.0
2250	Guscio	1985	1986	2043	2042	1	15.0
2251	Guscio	1986	1987	2044	2043	1	15.0
2252	Guscio	1987	1988	2045	2044	1	15.0
2253	Guscio	1988	1989	2046	2045	1	15.0
2254	Guscio	1989	1990	2047	2046	1	15.0
2255	Guscio	1990	1991	2048	2047	1	15.0
2256	Guscio	1991	1992	2049	2048	1	15.0
2257	Guscio	1992	1993	2050	2049	1	15.0
2258	Guscio	1993	1994	2051	2050	1	15.0
2259	Guscio	1994	1995	2052	2051	1	15.0
2260	Guscio	1995	1996	2053	2052	1	15.0
2261	Guscio	1996	1997	2054	2053	1	15.0
2262	Guscio	1997	1998	2055	2054	1	15.0
2263	Guscio	1998	1999	2056	2055	1	15.0
2264	Guscio	1999	2000	2057	2056	1	15.0
2265	Guscio	2000	2001	2058	2057	1	15.0
2266	Guscio	2001	2002	2059	2058	1	15.0
2267	Guscio	2002	2003	2060	2059	1	15.0
2268	Guscio	2003	2004	2061	2060	1	15.0
2269	Guscio	2004	2005	2062	2061	1	15.0
2270	Guscio	2005	2006	2063	2062	1	15.0
2271	Guscio	2006	2007	2064	2063	1	15.0
2272	Guscio	2007	2008	2065	2064	1	15.0
2273	Guscio	2008	2009	2066	2065	1	15.0
2274	Guscio	2009	2010	2067	2066	1	15.0
2275	Guscio	2011	2012	2069	2068	1	15.0
2276	Guscio	2012	2013	2070	2069	1	15.0
2277	Guscio	2013	2014	2071	2070	1	15.0
2278	Guscio	2014	2015	2072	2071	1	15.0
2279	Guscio	2015	2016	2073	2072	1	15.0
2280	Guscio	2016	2017	2074	2073	1	15.0
2281	Guscio	2017	2018	2075	2074	1	15.0
2282	Guscio	2018	2019	2076	2075	1	15.0
2283	Guscio	2019	2020	2077	2076	1	15.0
2284	Guscio	2020	2021	2078	2077	1	15.0
2285	Guscio	2021	2022	2079	2078	1	15.0
2286	Guscio	2022	2023	2080	2079	1	15.0
2287	Guscio	2023	2024	2081	2080	1	15.0
2288	Guscio	2024	2025	2082	2081	1	15.0
2289	Guscio	2025	2026	2083	2082	1	15.0
2290	Guscio	2026	2027	2084	2083	1	15.0
2291	Guscio	2027	2028	2085	2084	1	15.0
2292	Guscio	2028	2029	2086	2085	1	15.0
2293	Guscio	2029	2030	2087	2086	1	15.0
2294	Guscio	2030	2031	2088	2087	1	15.0
2295	Guscio	2031	2032	2089	2088	1	15.0
2296	Guscio	2032	2033	2090	2089	1	15.0
2297	Guscio	2033	2034	2091	2090	1	15.0
2298	Guscio	2034	2035	2092	2091	1	15.0
2299	Guscio	2035	2036	2093	2092	1	15.0
2300	Guscio	2036	2037	2094	2093	1	15.0
2301	Guscio	2037	2038	2095	2094	1	15.0
2302	Guscio	2038	2039	2096	2095	1	15.0
2303	Guscio	2039	2040	2097	2096	1	15.0
2304	Guscio	2040	2041	2098	2097	1	15.0
2305	Guscio	2041	2042	2099	2098	1	15.0
2306	Guscio	2042	2043	2100	2099	1	15.0

2307	Guscio	2043	2044	2101	2100	1	15.0
2308	Guscio	2044	2045	2102	2101	1	15.0
2309	Guscio	2045	2046	2103	2102	1	15.0
2310	Guscio	2046	2047	2104	2103	1	15.0
2311	Guscio	2047	2048	2105	2104	1	15.0
2312	Guscio	2048	2049	2106	2105	1	15.0
2313	Guscio	2049	2050	2107	2106	1	15.0
2314	Guscio	2050	2051	2108	2107	1	15.0
2315	Guscio	2051	2052	2109	2108	1	15.0
2316	Guscio	2052	2053	2110	2109	1	15.0
2317	Guscio	2053	2054	2111	2110	1	15.0
2318	Guscio	2054	2055	2112	2111	1	15.0
2319	Guscio	2055	2056	2113	2112	1	15.0
2320	Guscio	2056	2057	2114	2113	1	15.0
2321	Guscio	2057	2058	2115	2114	1	15.0
2322	Guscio	2058	2059	2116	2115	1	15.0
2323	Guscio	2059	2060	2117	2116	1	15.0
2324	Guscio	2060	2061	2118	2117	1	15.0
2325	Guscio	2061	2062	2119	2118	1	15.0
2326	Guscio	2062	2063	2120	2119	1	15.0
2327	Guscio	2063	2064	2121	2120	1	15.0
2328	Guscio	2064	2065	2122	2121	1	15.0
2329	Guscio	2065	2066	2123	2122	1	15.0
2330	Guscio	2066	2067	2124	2123	1	15.0
2331	Guscio	2068	2069	2126	2125	1	15.0
2332	Guscio	2069	2070	2127	2126	1	15.0
2333	Guscio	2070	2071	2128	2127	1	15.0
2334	Guscio	2071	2072	2129	2128	1	15.0
2335	Guscio	2072	2073	2130	2129	1	15.0
2336	Guscio	2073	2074	2131	2130	1	15.0
2337	Guscio	2074	2075	2132	2131	1	15.0
2338	Guscio	2075	2076	2133	2132	1	15.0
2339	Guscio	2076	2077	2134	2133	1	15.0
2340	Guscio	2077	2078	2135	2134	1	15.0
2341	Guscio	2078	2079	2136	2135	1	15.0
2342	Guscio	2079	2080	2137	2136	1	15.0
2343	Guscio	2080	2081	2138	2137	1	15.0
2344	Guscio	2081	2082	2139	2138	1	15.0
2345	Guscio	2082	2083	2140	2139	1	15.0
2346	Guscio	2083	2084	2141	2140	1	15.0
2347	Guscio	2084	2085	2142	2141	1	15.0
2348	Guscio	2085	2086	2143	2142	1	15.0
2349	Guscio	2086	2087	2144	2143	1	15.0
2350	Guscio	2087	2088	2145	2144	1	15.0
2351	Guscio	2088	2089	2146	2145	1	15.0
2352	Guscio	2089	2090	2147	2146	1	15.0
2353	Guscio	2090	2091	2148	2147	1	15.0
2354	Guscio	2091	2092	2149	2148	1	15.0
2355	Guscio	2092	2093	2150	2149	1	15.0
2356	Guscio	2093	2094	2151	2150	1	15.0
2357	Guscio	2094	2095	2152	2151	1	15.0
2358	Guscio	2095	2096	2153	2152	1	15.0
2359	Guscio	2096	2097	2154	2153	1	15.0
2360	Guscio	2097	2098	2155	2154	1	15.0
2361	Guscio	2098	2099	2156	2155	1	15.0
2362	Guscio	2099	2100	2157	2156	1	15.0
2363	Guscio	2100	2101	2158	2157	1	15.0
2364	Guscio	2101	2102	2159	2158	1	15.0
2365	Guscio	2102	2103	2160	2159	1	15.0
2366	Guscio	2103	2104	2161	2160	1	15.0
2367	Guscio	2104	2105	2162	2161	1	15.0
2368	Guscio	2105	2106	2163	2162	1	15.0
2369	Guscio	2106	2107	2164	2163	1	15.0
2370	Guscio	2107	2108	2165	2164	1	15.0
2371	Guscio	2108	2109	2166	2165	1	15.0
2372	Guscio	2109	2110	2167	2166	1	15.0
2373	Guscio	2110	2111	2168	2167	1	15.0
2374	Guscio	2111	2112	2169	2168	1	15.0
2375	Guscio	2112	2113	2170	2169	1	15.0
2376	Guscio	2113	2114	2171	2170	1	15.0
2377	Guscio	2114	2115	2172	2171	1	15.0
2378	Guscio	2115	2116	2173	2172	1	15.0
2379	Guscio	2116	2117	2174	2173	1	15.0
2380	Guscio	2117	2118	2175	2174	1	15.0
2381	Guscio	2118	2119	2176	2175	1	15.0
2382	Guscio	2119	2120	2177	2176	1	15.0
2383	Guscio	2120	2121	2178	2177	1	15.0
2384	Guscio	2121	2122	2179	2178	1	15.0
2385	Guscio	2122	2123	2180	2179	1	15.0

2386	Guscio	2123	2124	2181	2180	1	15.0
2387	Guscio	2125	2126	2183	2182	1	15.0
2388	Guscio	2126	2127	2184	2183	1	15.0
2389	Guscio	2127	2128	2185	2184	1	15.0
2390	Guscio	2128	2129	2186	2185	1	15.0
2391	Guscio	2129	2130	2187	2186	1	15.0
2392	Guscio	2130	2131	2188	2187	1	15.0
2393	Guscio	2131	2132	2189	2188	1	15.0
2394	Guscio	2132	2133	2190	2189	1	15.0
2395	Guscio	2133	2134	2191	2190	1	15.0
2396	Guscio	2134	2135	2192	2191	1	15.0
2397	Guscio	2135	2136	2193	2192	1	15.0
2398	Guscio	2136	2137	2194	2193	1	15.0
2399	Guscio	2137	2138	2195	2194	1	15.0
2400	Guscio	2138	2139	2196	2195	1	15.0
2401	Guscio	2139	2140	2197	2196	1	15.0
2402	Guscio	2140	2141	2198	2197	1	15.0
2403	Guscio	2141	2142	2199	2198	1	15.0
2404	Guscio	2142	2143	2200	2199	1	15.0
2405	Guscio	2143	2144	2201	2200	1	15.0
2406	Guscio	2144	2145	2202	2201	1	15.0
2407	Guscio	2145	2146	2203	2202	1	15.0
2408	Guscio	2146	2147	2204	2203	1	15.0
2409	Guscio	2147	2148	2205	2204	1	15.0
2410	Guscio	2148	2149	2206	2205	1	15.0
2411	Guscio	2149	2150	2207	2206	1	15.0
2412	Guscio	2150	2151	2208	2207	1	15.0
2413	Guscio	2151	2152	2209	2208	1	15.0
2414	Guscio	2152	2153	2210	2209	1	15.0
2415	Guscio	2153	2154	2211	2210	1	15.0
2416	Guscio	2154	2155	2212	2211	1	15.0
2417	Guscio	2155	2156	2213	2212	1	15.0
2418	Guscio	2156	2157	2214	2213	1	15.0
2419	Guscio	2157	2158	2215	2214	1	15.0
2420	Guscio	2158	2159	2216	2215	1	15.0
2421	Guscio	2159	2160	2217	2216	1	15.0
2422	Guscio	2160	2161	2218	2217	1	15.0
2423	Guscio	2161	2162	2219	2218	1	15.0
2424	Guscio	2162	2163	2220	2219	1	15.0
2425	Guscio	2163	2164	2221	2220	1	15.0
2426	Guscio	2164	2165	2222	2221	1	15.0
2427	Guscio	2165	2166	2223	2222	1	15.0
2428	Guscio	2166	2167	2224	2223	1	15.0
2429	Guscio	2167	2168	2225	2224	1	15.0
2430	Guscio	2168	2169	2226	2225	1	15.0
2431	Guscio	2169	2170	2227	2226	1	15.0
2432	Guscio	2170	2171	2228	2227	1	15.0
2433	Guscio	2171	2172	2229	2228	1	15.0
2434	Guscio	2172	2173	2230	2229	1	15.0
2435	Guscio	2173	2174	2231	2230	1	15.0
2436	Guscio	2174	2175	2232	2231	1	15.0
2437	Guscio	2175	2176	2233	2232	1	15.0
2438	Guscio	2176	2177	2234	2233	1	15.0
2439	Guscio	2177	2178	2235	2234	1	15.0
2440	Guscio	2178	2179	2236	2235	1	15.0
2441	Guscio	2179	2180	2237	2236	1	15.0
2442	Guscio	2180	2181	2238	2237	1	15.0
2443	Guscio	2182	2183	2240	2239	1	15.0
2444	Guscio	2183	2184	2241	2240	1	15.0
2445	Guscio	2184	2185	2242	2241	1	15.0
2446	Guscio	2185	2186	2243	2242	1	15.0
2447	Guscio	2186	2187	2244	2243	1	15.0
2448	Guscio	2187	2188	2245	2244	1	15.0
2449	Guscio	2188	2189	2246	2245	1	15.0
2450	Guscio	2189	2190	2247	2246	1	15.0
2451	Guscio	2190	2191	2248	2247	1	15.0
2452	Guscio	2191	2192	2249	2248	1	15.0
2453	Guscio	2192	2193	2250	2249	1	15.0
2454	Guscio	2193	2194	2251	2250	1	15.0
2455	Guscio	2194	2195	2252	2251	1	15.0
2456	Guscio	2195	2196	2253	2252	1	15.0
2457	Guscio	2196	2197	2254	2253	1	15.0
2458	Guscio	2197	2198	2255	2254	1	15.0
2459	Guscio	2198	2199	2256	2255	1	15.0
2460	Guscio	2199	2200	2257	2256	1	15.0
2461	Guscio	2200	2201	2258	2257	1	15.0
2462	Guscio	2201	2202	2259	2258	1	15.0
2463	Guscio	2202	2203	2260	2259	1	15.0
2464	Guscio	2203	2204	2261	2260	1	15.0

2465	Guscio	2204	2205	2262	2261	1	15.0
2466	Guscio	2205	2206	2263	2262	1	15.0
2467	Guscio	2206	2207	2264	2263	1	15.0
2468	Guscio	2207	2208	2265	2264	1	15.0
2469	Guscio	2208	2209	2266	2265	1	15.0
2470	Guscio	2209	2210	2267	2266	1	15.0
2471	Guscio	2210	2211	2268	2267	1	15.0
2472	Guscio	2211	2212	2269	2268	1	15.0
2473	Guscio	2212	2213	2270	2269	1	15.0
2474	Guscio	2213	2214	2271	2270	1	15.0
2475	Guscio	2214	2215	2272	2271	1	15.0
2476	Guscio	2215	2216	2273	2272	1	15.0
2477	Guscio	2216	2217	2274	2273	1	15.0
2478	Guscio	2217	2218	2275	2274	1	15.0
2479	Guscio	2218	2219	2276	2275	1	15.0
2480	Guscio	2219	2220	2277	2276	1	15.0
2481	Guscio	2220	2221	2278	2277	1	15.0
2482	Guscio	2221	2222	2279	2278	1	15.0
2483	Guscio	2222	2223	2280	2279	1	15.0
2484	Guscio	2223	2224	2281	2280	1	15.0
2485	Guscio	2224	2225	2282	2281	1	15.0
2486	Guscio	2225	2226	2283	2282	1	15.0
2487	Guscio	2226	2227	2284	2283	1	15.0
2488	Guscio	2227	2228	2285	2284	1	15.0
2489	Guscio	2228	2229	2286	2285	1	15.0
2490	Guscio	2229	2230	2287	2286	1	15.0
2491	Guscio	2230	2231	2288	2287	1	15.0
2492	Guscio	2231	2232	2289	2288	1	15.0
2493	Guscio	2232	2233	2290	2289	1	15.0
2494	Guscio	2233	2234	2291	2290	1	15.0
2495	Guscio	2234	2235	2292	2291	1	15.0
2496	Guscio	2235	2236	2293	2292	1	15.0
2497	Guscio	2236	2237	2294	2293	1	15.0
2498	Guscio	2237	2238	2295	2294	1	15.0
2499	Setto	1948	1954	2302	2296	1	15.0
2500	Setto	1949	1964	2307	2297	1	15.0
2501	Setto	1950	1976	2313	2298	1	15.0
2502	Setto	1951	1988	2319	2299	1	15.0
2503	Setto	1952	2000	2325	2300	1	15.0
2504	Setto	1953	2010	2330	2301	1	15.0
2505	Setto	1954	2011	2331	2302	1	15.0
2506	Setto	1956	2013	2332	2303	1	15.0
2507	Setto	1958	2015	2333	2304	1	15.0
2508	Setto	1960	2017	2334	2305	1	15.0
2509	Setto	1962	2019	2335	2306	1	15.0
2510	Setto	1964	2021	2336	2307	1	15.0
2511	Setto	1966	2023	2337	2308	1	15.0
2512	Setto	1968	2025	2338	2309	1	15.0
2513	Setto	1970	2027	2339	2310	1	15.0
2514	Setto	1972	2029	2340	2311	1	15.0
2515	Setto	1974	2031	2341	2312	1	15.0
2516	Setto	1976	2033	2342	2313	1	15.0
2517	Setto	1978	2035	2343	2314	1	15.0
2518	Setto	1980	2037	2344	2315	1	15.0
2519	Setto	1982	2039	2345	2316	1	15.0
2520	Setto	1984	2041	2346	2317	1	15.0
2521	Setto	1986	2043	2347	2318	1	15.0
2522	Setto	1988	2045	2348	2319	1	15.0
2523	Setto	1990	2047	2349	2320	1	15.0
2524	Setto	1992	2049	2350	2321	1	15.0
2525	Setto	1994	2051	2351	2322	1	15.0
2526	Setto	1996	2053	2352	2323	1	15.0
2527	Setto	1998	2055	2353	2324	1	15.0
2528	Setto	2000	2057	2354	2325	1	15.0
2529	Setto	2002	2059	2355	2326	1	15.0
2530	Setto	2004	2061	2356	2327	1	15.0
2531	Setto	2006	2063	2357	2328	1	15.0
2532	Setto	2008	2065	2358	2329	1	15.0
2533	Setto	2010	2067	2359	2330	1	15.0
2534	Setto	2011	2068	2360	2331	1	15.0
2535	Setto	2013	2070	2361	2332	1	15.0
2536	Setto	2015	2072	2362	2333	1	15.0
2537	Setto	2017	2074	2363	2334	1	15.0
2538	Setto	2019	2076	2364	2335	1	15.0
2539	Setto	2021	2078	2365	2336	1	15.0
2540	Setto	2023	2080	2366	2337	1	15.0
2541	Setto	2025	2082	2367	2338	1	15.0
2542	Setto	2027	2084	2368	2339	1	15.0
2543	Setto	2029	2086	2369	2340	1	15.0

2544	Setto	2031	2088	2370	2341	1	15.0
2545	Setto	2033	2090	2371	2342	1	15.0
2546	Setto	2035	2092	2372	2343	1	15.0
2547	Setto	2037	2094	2373	2344	1	15.0
2548	Setto	2039	2096	2374	2345	1	15.0
2549	Setto	2041	2098	2375	2346	1	15.0
2550	Setto	2043	2100	2376	2347	1	15.0
2551	Setto	2045	2102	2377	2348	1	15.0
2552	Setto	2047	2104	2378	2349	1	15.0
2553	Setto	2049	2106	2379	2350	1	15.0
2554	Setto	2051	2108	2380	2351	1	15.0
2555	Setto	2053	2110	2381	2352	1	15.0
2556	Setto	2055	2112	2382	2353	1	15.0
2557	Setto	2057	2114	2383	2354	1	15.0
2558	Setto	2059	2116	2384	2355	1	15.0
2559	Setto	2061	2118	2385	2356	1	15.0
2560	Setto	2063	2120	2386	2357	1	15.0
2561	Setto	2065	2122	2387	2358	1	15.0
2562	Setto	2067	2124	2388	2359	1	15.0
2563	Setto	2068	2125	2389	2360	1	15.0
2564	Setto	2070	2127	2390	2361	1	15.0
2565	Setto	2072	2129	2391	2362	1	15.0
2566	Setto	2074	2131	2392	2363	1	15.0
2567	Setto	2076	2133	2393	2364	1	15.0
2568	Setto	2078	2135	2394	2365	1	15.0
2569	Setto	2080	2137	2395	2366	1	15.0
2570	Setto	2082	2139	2396	2367	1	15.0
2571	Setto	2084	2141	2397	2368	1	15.0
2572	Setto	2086	2143	2398	2369	1	15.0
2573	Setto	2088	2145	2399	2370	1	15.0
2574	Setto	2090	2147	2400	2371	1	15.0
2575	Setto	2092	2149	2401	2372	1	15.0
2576	Setto	2094	2151	2402	2373	1	15.0
2577	Setto	2096	2153	2403	2374	1	15.0
2578	Setto	2098	2155	2404	2375	1	15.0
2579	Setto	2100	2157	2405	2376	1	15.0
2580	Setto	2102	2159	2406	2377	1	15.0
2581	Setto	2104	2161	2407	2378	1	15.0
2582	Setto	2106	2163	2408	2379	1	15.0
2583	Setto	2108	2165	2409	2380	1	15.0
2584	Setto	2110	2167	2410	2381	1	15.0
2585	Setto	2112	2169	2411	2382	1	15.0
2586	Setto	2114	2171	2412	2383	1	15.0
2587	Setto	2116	2173	2413	2384	1	15.0
2588	Setto	2118	2175	2414	2385	1	15.0
2589	Setto	2120	2177	2415	2386	1	15.0
2590	Setto	2122	2179	2416	2387	1	15.0
2591	Setto	2124	2181	2417	2388	1	15.0
2592	Setto	2125	2182	2418	2389	1	15.0
2593	Setto	2127	2184	2419	2390	1	15.0
2594	Setto	2129	2186	2420	2391	1	15.0
2595	Setto	2131	2188	2421	2392	1	15.0
2596	Setto	2133	2190	2422	2393	1	15.0
2597	Setto	2135	2192	2423	2394	1	15.0
2598	Setto	2137	2194	2424	2395	1	15.0
2599	Setto	2139	2196	2425	2396	1	15.0
2600	Setto	2141	2198	2426	2397	1	15.0
2601	Setto	2143	2200	2427	2398	1	15.0
2602	Setto	2145	2202	2428	2399	1	15.0
2603	Setto	2147	2204	2429	2400	1	15.0
2604	Setto	2149	2206	2430	2401	1	15.0
2605	Setto	2151	2208	2431	2402	1	15.0
2606	Setto	2153	2210	2432	2403	1	15.0
2607	Setto	2155	2212	2433	2404	1	15.0
2608	Setto	2157	2214	2434	2405	1	15.0
2609	Setto	2159	2216	2435	2406	1	15.0
2610	Setto	2161	2218	2436	2407	1	15.0
2611	Setto	2163	2220	2437	2408	1	15.0
2612	Setto	2165	2222	2438	2409	1	15.0
2613	Setto	2167	2224	2439	2410	1	15.0
2614	Setto	2169	2226	2440	2411	1	15.0
2615	Setto	2171	2228	2441	2412	1	15.0
2616	Setto	2173	2230	2442	2413	1	15.0
2617	Setto	2175	2232	2443	2414	1	15.0
2618	Setto	2177	2234	2444	2415	1	15.0
2619	Setto	2179	2236	2445	2416	1	15.0
2620	Setto	2181	2238	2446	2417	1	15.0
2621	Setto	2182	2239	2447	2418	1	15.0
2622	Setto	2184	2241	2449	2419	1	15.0

2623	Setto	2186	2243	2451	2420	1	15.0
2624	Setto	2188	2245	2453	2421	1	15.0
2625	Setto	2190	2247	2455	2422	1	15.0
2626	Setto	2192	2249	2457	2423	1	15.0
2627	Setto	2194	2251	2459	2424	1	15.0
2628	Setto	2196	2253	2461	2425	1	15.0
2629	Setto	2198	2255	2463	2426	1	15.0
2630	Setto	2200	2257	2465	2427	1	15.0
2631	Setto	2202	2259	2467	2428	1	15.0
2632	Setto	2204	2261	2469	2429	1	15.0
2633	Setto	2206	2263	2471	2430	1	15.0
2634	Setto	2208	2265	2473	2431	1	15.0
2635	Setto	2210	2267	2475	2432	1	15.0
2636	Setto	2212	2269	2477	2433	1	15.0
2637	Setto	2214	2271	2479	2434	1	15.0
2638	Setto	2216	2273	2481	2435	1	15.0
2639	Setto	2218	2275	2483	2436	1	15.0
2640	Setto	2220	2277	2485	2437	1	15.0
2641	Setto	2222	2279	2487	2438	1	15.0
2642	Setto	2224	2281	2489	2439	1	15.0
2643	Setto	2226	2283	2491	2440	1	15.0
2644	Setto	2228	2285	2493	2441	1	15.0
2645	Setto	2230	2287	2495	2442	1	15.0
2646	Setto	2232	2289	2497	2443	1	15.0
2647	Setto	2234	2291	2499	2444	1	15.0
2648	Setto	2236	2293	2501	2445	1	15.0
2649	Setto	2238	2295	2503	2446	1	15.0
2650	Setto	2447	2448	2240	2239	1	15.0
2651	Setto	2448	2449	2241	2240	1	15.0
2652	Setto	2449	2450	2242	2241	1	15.0
2653	Setto	2450	2451	2243	2242	1	15.0
2654	Setto	2451	2452	2244	2243	1	15.0
2655	Setto	2452	2453	2245	2244	1	15.0
2656	Setto	2453	2454	2246	2245	1	15.0
2657	Setto	2454	2455	2247	2246	1	15.0
2658	Setto	2455	2456	2248	2247	1	15.0
2659	Setto	2456	2457	2249	2248	1	15.0
2660	Setto	2457	2458	2250	2249	1	15.0
2661	Setto	2458	2459	2251	2250	1	15.0
2662	Setto	2459	2460	2252	2251	1	15.0
2663	Setto	2460	2461	2253	2252	1	15.0
2664	Setto	2461	2462	2254	2253	1	15.0
2665	Setto	2462	2463	2255	2254	1	15.0
2666	Setto	2463	2464	2256	2255	1	15.0
2667	Setto	2464	2465	2257	2256	1	15.0
2668	Setto	2465	2466	2258	2257	1	15.0
2669	Setto	2466	2467	2259	2258	1	15.0
2670	Setto	2467	2468	2260	2259	1	15.0
2671	Setto	2468	2469	2261	2260	1	15.0
2672	Setto	2469	2470	2262	2261	1	15.0
2673	Setto	2470	2471	2263	2262	1	15.0
2674	Setto	2471	2472	2264	2263	1	15.0
2675	Setto	2472	2473	2265	2264	1	15.0
2676	Setto	2473	2474	2266	2265	1	15.0
2677	Setto	2474	2475	2267	2266	1	15.0
2678	Setto	2475	2476	2268	2267	1	15.0
2679	Setto	2476	2477	2269	2268	1	15.0
2680	Setto	2477	2478	2270	2269	1	15.0
2681	Setto	2478	2479	2271	2270	1	15.0
2682	Setto	2479	2480	2272	2271	1	15.0
2683	Setto	2480	2481	2273	2272	1	15.0
2684	Setto	2481	2482	2274	2273	1	15.0
2685	Setto	2482	2483	2275	2274	1	15.0
2686	Setto	2483	2484	2276	2275	1	15.0
2687	Setto	2484	2485	2277	2276	1	15.0
2688	Setto	2485	2486	2278	2277	1	15.0
2689	Setto	2486	2487	2279	2278	1	15.0
2690	Setto	2487	2488	2280	2279	1	15.0
2691	Setto	2488	2489	2281	2280	1	15.0
2692	Setto	2489	2490	2282	2281	1	15.0
2693	Setto	2490	2491	2283	2282	1	15.0
2694	Setto	2491	2492	2284	2283	1	15.0
2695	Setto	2492	2493	2285	2284	1	15.0
2696	Setto	2493	2494	2286	2285	1	15.0
2697	Setto	2494	2495	2287	2286	1	15.0
2698	Setto	2495	2496	2288	2287	1	15.0
2699	Setto	2496	2497	2289	2288	1	15.0
2700	Setto	2497	2498	2290	2289	1	15.0
2701	Setto	2498	2499	2291	2290	1	15.0

2702	Setto	2499	2500	2292	2291	1	15.0
2703	Setto	2500	2501	2293	2292	1	15.0
2704	Setto	2501	2502	2294	2293	1	15.0
2705	Setto	2502	2503	2295	2294	1	15.0
2706	Setto	2296	2302	2510	2504	1	15.0
2707	Setto	2297	2307	2515	2505	1	15.0
2708	Setto	2298	2313	2521	2506	1	15.0
2709	Setto	2299	2319	2527	2507	1	15.0
2710	Setto	2300	2325	2533	2508	1	15.0
2711	Setto	2301	2330	2538	2509	1	15.0
2712	Setto	2302	2331	2539	2510	1	15.0
2713	Setto	2303	2332	2540	2511	1	15.0
2714	Setto	2304	2333	2541	2512	1	15.0
2715	Setto	2305	2334	2542	2513	1	15.0
2716	Setto	2306	2335	2543	2514	1	15.0
2717	Setto	2307	2336	2544	2515	1	15.0
2718	Setto	2308	2337	2545	2516	1	15.0
2719	Setto	2309	2338	2546	2517	1	15.0
2720	Setto	2310	2339	2547	2518	1	15.0
2721	Setto	2311	2340	2548	2519	1	15.0
2722	Setto	2312	2341	2549	2520	1	15.0
2723	Setto	2313	2342	2550	2521	1	15.0
2724	Setto	2314	2343	2551	2522	1	15.0
2725	Setto	2315	2344	2552	2523	1	15.0
2726	Setto	2316	2345	2553	2524	1	15.0
2727	Setto	2317	2346	2554	2525	1	15.0
2728	Setto	2318	2347	2555	2526	1	15.0
2729	Setto	2319	2348	2556	2527	1	15.0
2730	Setto	2320	2349	2557	2528	1	15.0
2731	Setto	2321	2350	2558	2529	1	15.0
2732	Setto	2322	2351	2559	2530	1	15.0
2733	Setto	2323	2352	2560	2531	1	15.0
2734	Setto	2324	2353	2561	2532	1	15.0
2735	Setto	2325	2354	2562	2533	1	15.0
2736	Setto	2326	2355	2563	2534	1	15.0
2737	Setto	2327	2356	2564	2535	1	15.0
2738	Setto	2328	2357	2565	2536	1	15.0
2739	Setto	2329	2358	2566	2537	1	15.0
2740	Setto	2330	2359	2567	2538	1	15.0
2741	Setto	2331	2360	2568	2539	1	15.0
2742	Setto	2332	2361	2569	2540	1	15.0
2743	Setto	2333	2362	2570	2541	1	15.0
2744	Setto	2334	2363	2571	2542	1	15.0
2745	Setto	2335	2364	2572	2543	1	15.0
2746	Setto	2336	2365	2573	2544	1	15.0
2747	Setto	2337	2366	2574	2545	1	15.0
2748	Setto	2338	2367	2575	2546	1	15.0
2749	Setto	2339	2368	2576	2547	1	15.0
2750	Setto	2340	2369	2577	2548	1	15.0
2751	Setto	2341	2370	2578	2549	1	15.0
2752	Setto	2342	2371	2579	2550	1	15.0
2753	Setto	2343	2372	2580	2551	1	15.0
2754	Setto	2344	2373	2581	2552	1	15.0
2755	Setto	2345	2374	2582	2553	1	15.0
2756	Setto	2346	2375	2583	2554	1	15.0
2757	Setto	2347	2376	2584	2555	1	15.0
2758	Setto	2348	2377	2585	2556	1	15.0
2759	Setto	2349	2378	2586	2557	1	15.0
2760	Setto	2350	2379	2587	2558	1	15.0
2761	Setto	2351	2380	2588	2559	1	15.0
2762	Setto	2352	2381	2589	2560	1	15.0
2763	Setto	2353	2382	2590	2561	1	15.0
2764	Setto	2354	2383	2591	2562	1	15.0
2765	Setto	2355	2384	2592	2563	1	15.0
2766	Setto	2356	2385	2593	2564	1	15.0
2767	Setto	2357	2386	2594	2565	1	15.0
2768	Setto	2358	2387	2595	2566	1	15.0
2769	Setto	2359	2388	2596	2567	1	15.0
2770	Setto	2360	2389	2597	2568	1	15.0
2771	Setto	2361	2390	2598	2569	1	15.0
2772	Setto	2362	2391	2599	2570	1	15.0
2773	Setto	2363	2392	2600	2571	1	15.0
2774	Setto	2364	2393	2601	2572	1	15.0
2775	Setto	2365	2394	2602	2573	1	15.0
2776	Setto	2366	2395	2603	2574	1	15.0
2777	Setto	2367	2396	2604	2575	1	15.0
2778	Setto	2368	2397	2605	2576	1	15.0
2779	Setto	2369	2398	2606	2577	1	15.0
2780	Setto	2370	2399	2607	2578	1	15.0

2781	Setto	2371	2400	2608	2579	1	15.0
2782	Setto	2372	2401	2609	2580	1	15.0
2783	Setto	2373	2402	2610	2581	1	15.0
2784	Setto	2374	2403	2611	2582	1	15.0
2785	Setto	2375	2404	2612	2583	1	15.0
2786	Setto	2376	2405	2613	2584	1	15.0
2787	Setto	2377	2406	2614	2585	1	15.0
2788	Setto	2378	2407	2615	2586	1	15.0
2789	Setto	2379	2408	2616	2587	1	15.0
2790	Setto	2380	2409	2617	2588	1	15.0
2791	Setto	2381	2410	2618	2589	1	15.0
2792	Setto	2382	2411	2619	2590	1	15.0
2793	Setto	2383	2412	2620	2591	1	15.0
2794	Setto	2384	2413	2621	2592	1	15.0
2795	Setto	2385	2414	2622	2593	1	15.0
2796	Setto	2386	2415	2623	2594	1	15.0
2797	Setto	2387	2416	2624	2595	1	15.0
2798	Setto	2388	2417	2625	2596	1	15.0
2799	Setto	2389	2418	2626	2597	1	15.0
2800	Setto	2390	2419	2627	2598	1	15.0
2801	Setto	2391	2420	2628	2599	1	15.0
2802	Setto	2392	2421	2629	2600	1	15.0
2803	Setto	2393	2422	2630	2601	1	15.0
2804	Setto	2394	2423	2631	2602	1	15.0
2805	Setto	2395	2424	2632	2603	1	15.0
2806	Setto	2396	2425	2633	2604	1	15.0
2807	Setto	2397	2426	2634	2605	1	15.0
2808	Setto	2398	2427	2635	2606	1	15.0
2809	Setto	2399	2428	2636	2607	1	15.0
2810	Setto	2400	2429	2637	2608	1	15.0
2811	Setto	2401	2430	2638	2609	1	15.0
2812	Setto	2402	2431	2639	2610	1	15.0
2813	Setto	2403	2432	2640	2611	1	15.0
2814	Setto	2404	2433	2641	2612	1	15.0
2815	Setto	2405	2434	2642	2613	1	15.0
2816	Setto	2406	2435	2643	2614	1	15.0
2817	Setto	2407	2436	2644	2615	1	15.0
2818	Setto	2408	2437	2645	2616	1	15.0
2819	Setto	2409	2438	2646	2617	1	15.0
2820	Setto	2410	2439	2647	2618	1	15.0
2821	Setto	2411	2440	2648	2619	1	15.0
2822	Setto	2412	2441	2649	2620	1	15.0
2823	Setto	2413	2442	2650	2621	1	15.0
2824	Setto	2414	2443	2651	2622	1	15.0
2825	Setto	2415	2444	2652	2623	1	15.0
2826	Setto	2416	2445	2653	2624	1	15.0
2827	Setto	2417	2446	2654	2625	1	15.0
2828	Setto	2418	2447	2655	2626	1	15.0
2829	Setto	2419	2449	2657	2627	1	15.0
2830	Setto	2420	2451	2659	2628	1	15.0
2831	Setto	2421	2453	2661	2629	1	15.0
2832	Setto	2422	2455	2663	2630	1	15.0
2833	Setto	2423	2457	2665	2631	1	15.0
2834	Setto	2424	2459	2667	2632	1	15.0
2835	Setto	2425	2461	2669	2633	1	15.0
2836	Setto	2426	2463	2671	2634	1	15.0
2837	Setto	2427	2465	2673	2635	1	15.0
2838	Setto	2428	2467	2675	2636	1	15.0
2839	Setto	2429	2469	2677	2637	1	15.0
2840	Setto	2430	2471	2679	2638	1	15.0
2841	Setto	2431	2473	2681	2639	1	15.0
2842	Setto	2432	2475	2683	2640	1	15.0
2843	Setto	2433	2477	2685	2641	1	15.0
2844	Setto	2434	2479	2687	2642	1	15.0
2845	Setto	2435	2481	2689	2643	1	15.0
2846	Setto	2436	2483	2691	2644	1	15.0
2847	Setto	2437	2485	2693	2645	1	15.0
2848	Setto	2438	2487	2695	2646	1	15.0
2849	Setto	2439	2489	2697	2647	1	15.0
2850	Setto	2440	2491	2699	2648	1	15.0
2851	Setto	2441	2493	2701	2649	1	15.0
2852	Setto	2442	2495	2703	2650	1	15.0
2853	Setto	2443	2497	2705	2651	1	15.0
2854	Setto	2444	2499	2707	2652	1	15.0
2855	Setto	2445	2501	2709	2653	1	15.0
2856	Setto	2446	2503	2711	2654	1	15.0
2857	Setto	2655	2656	2448	2447	1	15.0
2858	Setto	2656	2657	2449	2448	1	15.0
2859	Setto	2657	2658	2450	2449	1	15.0

2860	Setto	2658	2659	2451	2450	1	15.0
2861	Setto	2659	2660	2452	2451	1	15.0
2862	Setto	2660	2661	2453	2452	1	15.0
2863	Setto	2661	2662	2454	2453	1	15.0
2864	Setto	2662	2663	2455	2454	1	15.0
2865	Setto	2663	2664	2456	2455	1	15.0
2866	Setto	2664	2665	2457	2456	1	15.0
2867	Setto	2665	2666	2458	2457	1	15.0
2868	Setto	2666	2667	2459	2458	1	15.0
2869	Setto	2667	2668	2460	2459	1	15.0
2870	Setto	2668	2669	2461	2460	1	15.0
2871	Setto	2669	2670	2462	2461	1	15.0
2872	Setto	2670	2671	2463	2462	1	15.0
2873	Setto	2671	2672	2464	2463	1	15.0
2874	Setto	2672	2673	2465	2464	1	15.0
2875	Setto	2673	2674	2466	2465	1	15.0
2876	Setto	2674	2675	2467	2466	1	15.0
2877	Setto	2675	2676	2468	2467	1	15.0
2878	Setto	2676	2677	2469	2468	1	15.0
2879	Setto	2677	2678	2470	2469	1	15.0
2880	Setto	2678	2679	2471	2470	1	15.0
2881	Setto	2679	2680	2472	2471	1	15.0
2882	Setto	2680	2681	2473	2472	1	15.0
2883	Setto	2681	2682	2474	2473	1	15.0
2884	Setto	2682	2683	2475	2474	1	15.0
2885	Setto	2683	2684	2476	2475	1	15.0
2886	Setto	2684	2685	2477	2476	1	15.0
2887	Setto	2685	2686	2478	2477	1	15.0
2888	Setto	2686	2687	2479	2478	1	15.0
2889	Setto	2687	2688	2480	2479	1	15.0
2890	Setto	2688	2689	2481	2480	1	15.0
2891	Setto	2689	2690	2482	2481	1	15.0
2892	Setto	2690	2691	2483	2482	1	15.0
2893	Setto	2691	2692	2484	2483	1	15.0
2894	Setto	2692	2693	2485	2484	1	15.0
2895	Setto	2693	2694	2486	2485	1	15.0
2896	Setto	2694	2695	2487	2486	1	15.0
2897	Setto	2695	2696	2488	2487	1	15.0
2898	Setto	2696	2697	2489	2488	1	15.0
2899	Setto	2697	2698	2490	2489	1	15.0
2900	Setto	2698	2699	2491	2490	1	15.0
2901	Setto	2699	2700	2492	2491	1	15.0
2902	Setto	2700	2701	2493	2492	1	15.0
2903	Setto	2701	2702	2494	2493	1	15.0
2904	Setto	2702	2703	2495	2494	1	15.0
2905	Setto	2703	2704	2496	2495	1	15.0
2906	Setto	2704	2705	2497	2496	1	15.0
2907	Setto	2705	2706	2498	2497	1	15.0
2908	Setto	2706	2707	2499	2498	1	15.0
2909	Setto	2707	2708	2500	2499	1	15.0
2910	Setto	2708	2709	2501	2500	1	15.0
2911	Setto	2709	2710	2502	2501	1	15.0
2912	Setto	2710	2711	2503	2502	1	15.0
2913	Setto	2504	2510	2718	2712	1	15.0
2914	Setto	2505	2515	2728	2713	1	15.0
2915	Setto	2506	2521	2740	2714	1	15.0
2916	Setto	2507	2527	2752	2715	1	15.0
2917	Setto	2508	2533	2764	2716	1	15.0
2918	Setto	2509	2538	2774	2717	1	15.0
2919	Setto	2510	2539	2775	2718	1	15.0
2920	Setto	2511	2540	2777	2720	1	15.0
2921	Setto	2512	2541	2779	2722	1	15.0
2922	Setto	2513	2542	2781	2724	1	15.0
2923	Setto	2514	2543	2783	2726	1	15.0
2924	Setto	2515	2544	2785	2728	1	15.0
2925	Setto	2516	2545	2787	2730	1	15.0
2926	Setto	2517	2546	2789	2732	1	15.0
2927	Setto	2518	2547	2791	2734	1	15.0
2928	Setto	2519	2548	2793	2736	1	15.0
2929	Setto	2520	2549	2795	2738	1	15.0
2930	Setto	2521	2550	2797	2740	1	15.0
2931	Setto	2522	2551	2799	2742	1	15.0
2932	Setto	2523	2552	2801	2744	1	15.0
2933	Setto	2524	2553	2803	2746	1	15.0
2934	Setto	2525	2554	2805	2748	1	15.0
2935	Setto	2526	2555	2807	2750	1	15.0
2936	Setto	2527	2556	2809	2752	1	15.0
2937	Setto	2528	2557	2811	2754	1	15.0
2938	Setto	2529	2558	2813	2756	1	15.0

2939	Setto	2530	2559	2815	2758	1	15.0
2940	Setto	2531	2560	2817	2760	1	15.0
2941	Setto	2532	2561	2819	2762	1	15.0
2942	Setto	2533	2562	2821	2764	1	15.0
2943	Setto	2534	2563	2823	2766	1	15.0
2944	Setto	2535	2564	2825	2768	1	15.0
2945	Setto	2536	2565	2827	2770	1	15.0
2946	Setto	2537	2566	2829	2772	1	15.0
2947	Setto	2538	2567	2831	2774	1	15.0
2948	Setto	2539	2568	2832	2775	1	15.0
2949	Setto	2540	2569	2834	2777	1	15.0
2950	Setto	2541	2570	2836	2779	1	15.0
2951	Setto	2542	2571	2838	2781	1	15.0
2952	Setto	2543	2572	2840	2783	1	15.0
2953	Setto	2544	2573	2842	2785	1	15.0
2954	Setto	2545	2574	2844	2787	1	15.0
2955	Setto	2546	2575	2846	2789	1	15.0
2956	Setto	2547	2576	2848	2791	1	15.0
2957	Setto	2548	2577	2850	2793	1	15.0
2958	Setto	2549	2578	2852	2795	1	15.0
2959	Setto	2550	2579	2854	2797	1	15.0
2960	Setto	2551	2580	2856	2799	1	15.0
2961	Setto	2552	2581	2858	2801	1	15.0
2962	Setto	2553	2582	2860	2803	1	15.0
2963	Setto	2554	2583	2862	2805	1	15.0
2964	Setto	2556	2585	2866	2809	1	15.0
2965	Setto	2557	2586	2868	2811	1	15.0
2966	Setto	2558	2587	2870	2813	1	15.0
2967	Setto	2559	2588	2872	2815	1	15.0
2968	Setto	2560	2589	2874	2817	1	15.0
2969	Setto	2561	2590	2876	2819	1	15.0
2970	Setto	2562	2591	2878	2821	1	15.0
2971	Setto	2563	2592	2880	2823	1	15.0
2972	Setto	2564	2593	2882	2825	1	15.0
2973	Setto	2565	2594	2884	2827	1	15.0
2974	Setto	2566	2595	2886	2829	1	15.0
2975	Setto	2567	2596	2888	2831	1	15.0
2976	Setto	2568	2597	2889	2832	1	15.0
2977	Setto	2569	2598	2891	2834	1	15.0
2978	Setto	2570	2599	2893	2836	1	15.0
2979	Setto	2571	2600	2895	2838	1	15.0
2980	Setto	2572	2601	2897	2840	1	15.0
2981	Setto	2573	2602	2899	2842	1	15.0
2982	Setto	2574	2603	2901	2844	1	15.0
2983	Setto	2575	2604	2903	2846	1	15.0
2984	Setto	2576	2605	2905	2848	1	15.0
2985	Setto	2577	2606	2907	2850	1	15.0
2986	Setto	2578	2607	2909	2852	1	15.0
2987	Setto	2579	2608	2911	2854	1	15.0
2988	Setto	2580	2609	2913	2856	1	15.0
2989	Setto	2581	2610	2915	2858	1	15.0
2990	Setto	2582	2611	2917	2860	1	15.0
2991	Setto	2584	2613	2921	2864	1	15.0
2992	Setto	2585	2614	2923	2866	1	15.0
2993	Setto	2586	2615	2925	2868	1	15.0
2994	Setto	2587	2616	2927	2870	1	15.0
2995	Setto	2588	2617	2929	2872	1	15.0
2996	Setto	2589	2618	2931	2874	1	15.0
2997	Setto	2590	2619	2933	2876	1	15.0
2998	Setto	2591	2620	2935	2878	1	15.0
2999	Setto	2592	2621	2937	2880	1	15.0
3000	Setto	2593	2622	2939	2882	1	15.0
3001	Setto	2594	2623	2941	2884	1	15.0
3002	Setto	2595	2624	2943	2886	1	15.0
3003	Setto	2596	2625	2945	2888	1	15.0
3004	Setto	2597	2626	2946	2889	1	15.0
3005	Setto	2598	2627	2948	2891	1	15.0
3006	Setto	2599	2628	2950	2893	1	15.0
3007	Setto	2600	2629	2952	2895	1	15.0
3008	Setto	2601	2630	2954	2897	1	15.0
3009	Setto	2602	2631	2956	2899	1	15.0
3010	Setto	2603	2632	2958	2901	1	15.0
3011	Setto	2604	2633	2960	2903	1	15.0
3012	Setto	2605	2634	2962	2905	1	15.0
3013	Setto	2606	2635	2964	2907	1	15.0
3014	Setto	2607	2636	2966	2909	1	15.0
3015	Setto	2608	2637	2968	2911	1	15.0
3016	Setto	2609	2638	2970	2913	1	15.0
3017	Setto	2610	2639	2972	2915	1	15.0

3018	Setto	2612	2641	2976	2919	1	15.0
3019	Setto	2613	2642	2978	2921	1	15.0
3020	Setto	2614	2643	2980	2923	1	15.0
3021	Setto	2615	2644	2982	2925	1	15.0
3022	Setto	2616	2645	2984	2927	1	15.0
3023	Setto	2617	2646	2986	2929	1	15.0
3024	Setto	2618	2647	2988	2931	1	15.0
3025	Setto	2619	2648	2990	2933	1	15.0
3026	Setto	2620	2649	2992	2935	1	15.0
3027	Setto	2621	2650	2994	2937	1	15.0
3028	Setto	2622	2651	2996	2939	1	15.0
3029	Setto	2623	2652	2998	2941	1	15.0
3030	Setto	2624	2653	3000	2943	1	15.0
3031	Setto	2625	2654	3002	2945	1	15.0
3032	Setto	2626	2655	3003	2946	1	15.0
3033	Setto	2627	2657	3005	2948	1	15.0
3034	Setto	2628	2659	3007	2950	1	15.0
3035	Setto	2629	2661	3009	2952	1	15.0
3036	Setto	2630	2663	3011	2954	1	15.0
3037	Setto	2631	2665	3013	2956	1	15.0
3038	Setto	2632	2667	3015	2958	1	15.0
3039	Setto	2633	2669	3017	2960	1	15.0
3040	Setto	2634	2671	3019	2962	1	15.0
3041	Setto	2635	2673	3021	2964	1	15.0
3042	Setto	2636	2675	3023	2966	1	15.0
3043	Setto	2637	2677	3025	2968	1	15.0
3044	Setto	2638	2679	3027	2970	1	15.0
3045	Setto	2640	2683	3031	2974	1	15.0
3046	Setto	2641	2685	3033	2976	1	15.0
3047	Setto	2642	2687	3035	2978	1	15.0
3048	Setto	2643	2689	3037	2980	1	15.0
3049	Setto	2644	2691	3039	2982	1	15.0
3050	Setto	2645	2693	3041	2984	1	15.0
3051	Setto	2646	2695	3043	2986	1	15.0
3052	Setto	2647	2697	3045	2988	1	15.0
3053	Setto	2648	2699	3047	2990	1	15.0
3054	Setto	2649	2701	3049	2992	1	15.0
3055	Setto	2650	2703	3051	2994	1	15.0
3056	Setto	2651	2705	3053	2996	1	15.0
3057	Setto	2652	2707	3055	2998	1	15.0
3058	Setto	2653	2709	3057	3000	1	15.0
3059	Setto	2654	2711	3059	3002	1	15.0
3060	Setto	3003	3004	2656	2655	1	15.0
3061	Setto	3004	3005	2657	2656	1	15.0
3062	Setto	3005	3006	2658	2657	1	15.0
3063	Setto	3006	3007	2659	2658	1	15.0
3064	Setto	3007	3008	2660	2659	1	15.0
3065	Setto	3008	3009	2661	2660	1	15.0
3066	Setto	3009	3010	2662	2661	1	15.0
3067	Setto	3010	3011	2663	2662	1	15.0
3068	Setto	3011	3012	2664	2663	1	15.0
3069	Setto	3012	3013	2665	2664	1	15.0
3070	Setto	3013	3014	2666	2665	1	15.0
3071	Setto	3014	3015	2667	2666	1	15.0
3072	Setto	3015	3016	2668	2667	1	15.0
3073	Setto	3016	3017	2669	2668	1	15.0
3074	Setto	3017	3018	2670	2669	1	15.0
3075	Setto	3018	3019	2671	2670	1	15.0
3076	Setto	3019	3020	2672	2671	1	15.0
3077	Setto	3020	3021	2673	2672	1	15.0
3078	Setto	3021	3022	2674	2673	1	15.0
3079	Setto	3022	3023	2675	2674	1	15.0
3080	Setto	3023	3024	2676	2675	1	15.0
3081	Setto	3024	3025	2677	2676	1	15.0
3082	Setto	3025	3026	2678	2677	1	15.0
3083	Setto	3026	3027	2679	2678	1	15.0
3084	Setto	3027	3028	2680	2679	1	15.0
3085	Setto	3028	3029	2681	2680	1	15.0
3086	Setto	3029	3030	2682	2681	1	15.0
3087	Setto	3030	3031	2683	2682	1	15.0
3088	Setto	3031	3032	2684	2683	1	15.0
3089	Setto	3032	3033	2685	2684	1	15.0
3090	Setto	3033	3034	2686	2685	1	15.0
3091	Setto	3034	3035	2687	2686	1	15.0
3092	Setto	3035	3036	2688	2687	1	15.0
3093	Setto	3036	3037	2689	2688	1	15.0
3094	Setto	3037	3038	2690	2689	1	15.0
3095	Setto	3038	3039	2691	2690	1	15.0
3096	Setto	3039	3040	2692	2691	1	15.0

3097	Setto	3040	3041	2693	2692	1	15.0
3098	Setto	3041	3042	2694	2693	1	15.0
3099	Setto	3042	3043	2695	2694	1	15.0
3100	Setto	3043	3044	2696	2695	1	15.0
3101	Setto	3044	3045	2697	2696	1	15.0
3102	Setto	3045	3046	2698	2697	1	15.0
3103	Setto	3046	3047	2699	2698	1	15.0
3104	Setto	3047	3048	2700	2699	1	15.0
3105	Setto	3048	3049	2701	2700	1	15.0
3106	Setto	3049	3050	2702	2701	1	15.0
3107	Setto	3050	3051	2703	2702	1	15.0
3108	Setto	3051	3052	2704	2703	1	15.0
3109	Setto	3052	3053	2705	2704	1	15.0
3110	Setto	3053	3054	2706	2705	1	15.0
3111	Setto	3054	3055	2707	2706	1	15.0
3112	Setto	3055	3056	2708	2707	1	15.0
3113	Setto	3056	3057	2709	2708	1	15.0
3114	Setto	3057	3058	2710	2709	1	15.0
3115	Setto	3058	3059	2711	2710	1	15.0
3116	Guscio	2718	2719	2776	2775	1	15.0
3117	Guscio	2719	2720	2777	2776	1	15.0
3118	Guscio	2720	2721	2778	2777	1	15.0
3119	Guscio	2721	2722	2779	2778	1	15.0
3120	Guscio	2722	2723	2780	2779	1	15.0
3121	Guscio	2723	2724	2781	2780	1	15.0
3122	Guscio	2724	2725	2782	2781	1	15.0
3123	Guscio	2725	2726	2783	2782	1	15.0
3124	Guscio	2726	2727	2784	2783	1	15.0
3125	Guscio	2727	2728	2785	2784	1	15.0
3126	Guscio	2728	2729	2786	2785	1	15.0
3127	Guscio	2729	2730	2787	2786	1	15.0
3128	Guscio	2730	2731	2788	2787	1	15.0
3129	Guscio	2731	2732	2789	2788	1	15.0
3130	Guscio	2732	2733	2790	2789	1	15.0
3131	Guscio	2733	2734	2791	2790	1	15.0
3132	Guscio	2734	2735	2792	2791	1	15.0
3133	Guscio	2735	2736	2793	2792	1	15.0
3134	Guscio	2736	2737	2794	2793	1	15.0
3135	Guscio	2737	2738	2795	2794	1	15.0
3136	Guscio	2738	2739	2796	2795	1	15.0
3137	Guscio	2739	2740	2797	2796	1	15.0
3138	Guscio	2740	2741	2798	2797	1	15.0
3139	Guscio	2741	2742	2799	2798	1	15.0
3140	Guscio	2742	2743	2800	2799	1	15.0
3141	Guscio	2743	2744	2801	2800	1	15.0
3142	Guscio	2744	2745	2802	2801	1	15.0
3143	Guscio	2745	2746	2803	2802	1	15.0
3144	Guscio	2746	2747	2804	2803	1	15.0
3145	Guscio	2747	2748	2805	2804	1	15.0
3146	Guscio	2748	2749	2806	2805	1	15.0
3147	Guscio	2749	2750	2807	2806	1	15.0
3148	Guscio	2750	2751	2808	2807	1	15.0
3149	Guscio	2751	2752	2809	2808	1	15.0
3150	Guscio	2752	2753	2810	2809	1	15.0
3151	Guscio	2753	2754	2811	2810	1	15.0
3152	Guscio	2754	2755	2812	2811	1	15.0
3153	Guscio	2755	2756	2813	2812	1	15.0
3154	Guscio	2756	2757	2814	2813	1	15.0
3155	Guscio	2757	2758	2815	2814	1	15.0
3156	Guscio	2758	2759	2816	2815	1	15.0
3157	Guscio	2759	2760	2817	2816	1	15.0
3158	Guscio	2760	2761	2818	2817	1	15.0
3159	Guscio	2761	2762	2819	2818	1	15.0
3160	Guscio	2762	2763	2820	2819	1	15.0
3161	Guscio	2763	2764	2821	2820	1	15.0
3162	Guscio	2764	2765	2822	2821	1	15.0
3163	Guscio	2765	2766	2823	2822	1	15.0
3164	Guscio	2766	2767	2824	2823	1	15.0
3165	Guscio	2767	2768	2825	2824	1	15.0
3166	Guscio	2768	2769	2826	2825	1	15.0
3167	Guscio	2769	2770	2827	2826	1	15.0
3168	Guscio	2770	2771	2828	2827	1	15.0
3169	Guscio	2771	2772	2829	2828	1	15.0
3170	Guscio	2772	2773	2830	2829	1	15.0
3171	Guscio	2773	2774	2831	2830	1	15.0
3172	Guscio	2775	2776	2833	2832	1	15.0
3173	Guscio	2776	2777	2834	2833	1	15.0
3174	Guscio	2777	2778	2835	2834	1	15.0
3175	Guscio	2778	2779	2836	2835	1	15.0

3176	Guscio	2779	2780	2837	2836	1	15.0
3177	Guscio	2780	2781	2838	2837	1	15.0
3178	Guscio	2781	2782	2839	2838	1	15.0
3179	Guscio	2782	2783	2840	2839	1	15.0
3180	Guscio	2783	2784	2841	2840	1	15.0
3181	Guscio	2784	2785	2842	2841	1	15.0
3182	Guscio	2785	2786	2843	2842	1	15.0
3183	Guscio	2786	2787	2844	2843	1	15.0
3184	Guscio	2787	2788	2845	2844	1	15.0
3185	Guscio	2788	2789	2846	2845	1	15.0
3186	Guscio	2789	2790	2847	2846	1	15.0
3187	Guscio	2790	2791	2848	2847	1	15.0
3188	Guscio	2791	2792	2849	2848	1	15.0
3189	Guscio	2792	2793	2850	2849	1	15.0
3190	Guscio	2793	2794	2851	2850	1	15.0
3191	Guscio	2794	2795	2852	2851	1	15.0
3192	Guscio	2795	2796	2853	2852	1	15.0
3193	Guscio	2796	2797	2854	2853	1	15.0
3194	Guscio	2797	2798	2855	2854	1	15.0
3195	Guscio	2798	2799	2856	2855	1	15.0
3196	Guscio	2799	2800	2857	2856	1	15.0
3197	Guscio	2800	2801	2858	2857	1	15.0
3198	Guscio	2801	2802	2859	2858	1	15.0
3199	Guscio	2802	2803	2860	2859	1	15.0
3200	Guscio	2803	2804	2861	2860	1	15.0
3201	Guscio	2804	2805	2862	2861	1	15.0
3202	Guscio	2805	2806	2863	2862	1	15.0
3203	Guscio	2806	2807	2864	2863	1	15.0
3204	Guscio	2807	2808	2865	2864	1	15.0
3205	Guscio	2808	2809	2866	2865	1	15.0
3206	Guscio	2809	2810	2867	2866	1	15.0
3207	Guscio	2810	2811	2868	2867	1	15.0
3208	Guscio	2811	2812	2869	2868	1	15.0
3209	Guscio	2812	2813	2870	2869	1	15.0
3210	Guscio	2813	2814	2871	2870	1	15.0
3211	Guscio	2814	2815	2872	2871	1	15.0
3212	Guscio	2815	2816	2873	2872	1	15.0
3213	Guscio	2816	2817	2874	2873	1	15.0
3214	Guscio	2817	2818	2875	2874	1	15.0
3215	Guscio	2818	2819	2876	2875	1	15.0
3216	Guscio	2819	2820	2877	2876	1	15.0
3217	Guscio	2820	2821	2878	2877	1	15.0
3218	Guscio	2821	2822	2879	2878	1	15.0
3219	Guscio	2822	2823	2880	2879	1	15.0
3220	Guscio	2823	2824	2881	2880	1	15.0
3221	Guscio	2824	2825	2882	2881	1	15.0
3222	Guscio	2825	2826	2883	2882	1	15.0
3223	Guscio	2826	2827	2884	2883	1	15.0
3224	Guscio	2827	2828	2885	2884	1	15.0
3225	Guscio	2828	2829	2886	2885	1	15.0
3226	Guscio	2829	2830	2887	2886	1	15.0
3227	Guscio	2830	2831	2888	2887	1	15.0
3228	Guscio	2832	2833	2890	2889	1	15.0
3229	Guscio	2833	2834	2891	2890	1	15.0
3230	Guscio	2834	2835	2892	2891	1	15.0
3231	Guscio	2835	2836	2893	2892	1	15.0
3232	Guscio	2836	2837	2894	2893	1	15.0
3233	Guscio	2837	2838	2895	2894	1	15.0
3234	Guscio	2838	2839	2896	2895	1	15.0
3235	Guscio	2839	2840	2897	2896	1	15.0
3236	Guscio	2840	2841	2898	2897	1	15.0
3237	Guscio	2841	2842	2899	2898	1	15.0
3238	Guscio	2842	2843	2900	2899	1	15.0
3239	Guscio	2843	2844	2901	2900	1	15.0
3240	Guscio	2844	2845	2902	2901	1	15.0
3241	Guscio	2845	2846	2903	2902	1	15.0
3242	Guscio	2846	2847	2904	2903	1	15.0
3243	Guscio	2847	2848	2905	2904	1	15.0
3244	Guscio	2848	2849	2906	2905	1	15.0
3245	Guscio	2849	2850	2907	2906	1	15.0
3246	Guscio	2850	2851	2908	2907	1	15.0
3247	Guscio	2851	2852	2909	2908	1	15.0
3248	Guscio	2852	2853	2910	2909	1	15.0
3249	Guscio	2853	2854	2911	2910	1	15.0
3250	Guscio	2854	2855	2912	2911	1	15.0
3251	Guscio	2855	2856	2913	2912	1	15.0
3252	Guscio	2856	2857	2914	2913	1	15.0
3253	Guscio	2857	2858	2915	2914	1	15.0
3254	Guscio	2858	2859	2916	2915	1	15.0

3255	Guscio	2859	2860	2917	2916	1	15.0
3256	Guscio	2860	2861	2918	2917	1	15.0
3257	Guscio	2861	2862	2919	2918	1	15.0
3258	Guscio	2862	2863	2920	2919	1	15.0
3259	Guscio	2863	2864	2921	2920	1	15.0
3260	Guscio	2864	2865	2922	2921	1	15.0
3261	Guscio	2865	2866	2923	2922	1	15.0
3262	Guscio	2866	2867	2924	2923	1	15.0
3263	Guscio	2867	2868	2925	2924	1	15.0
3264	Guscio	2868	2869	2926	2925	1	15.0
3265	Guscio	2869	2870	2927	2926	1	15.0
3266	Guscio	2870	2871	2928	2927	1	15.0
3267	Guscio	2871	2872	2929	2928	1	15.0
3268	Guscio	2872	2873	2930	2929	1	15.0
3269	Guscio	2873	2874	2931	2930	1	15.0
3270	Guscio	2874	2875	2932	2931	1	15.0
3271	Guscio	2875	2876	2933	2932	1	15.0
3272	Guscio	2876	2877	2934	2933	1	15.0
3273	Guscio	2877	2878	2935	2934	1	15.0
3274	Guscio	2878	2879	2936	2935	1	15.0
3275	Guscio	2879	2880	2937	2936	1	15.0
3276	Guscio	2880	2881	2938	2937	1	15.0
3277	Guscio	2881	2882	2939	2938	1	15.0
3278	Guscio	2882	2883	2940	2939	1	15.0
3279	Guscio	2883	2884	2941	2940	1	15.0
3280	Guscio	2884	2885	2942	2941	1	15.0
3281	Guscio	2885	2886	2943	2942	1	15.0
3282	Guscio	2886	2887	2944	2943	1	15.0
3283	Guscio	2887	2888	2945	2944	1	15.0
3284	Guscio	2889	2890	2947	2946	1	15.0
3285	Guscio	2890	2891	2948	2947	1	15.0
3286	Guscio	2891	2892	2949	2948	1	15.0
3287	Guscio	2892	2893	2950	2949	1	15.0
3288	Guscio	2893	2894	2951	2950	1	15.0
3289	Guscio	2894	2895	2952	2951	1	15.0
3290	Guscio	2895	2896	2953	2952	1	15.0
3291	Guscio	2896	2897	2954	2953	1	15.0
3292	Guscio	2897	2898	2955	2954	1	15.0
3293	Guscio	2898	2899	2956	2955	1	15.0
3294	Guscio	2899	2900	2957	2956	1	15.0
3295	Guscio	2900	2901	2958	2957	1	15.0
3296	Guscio	2901	2902	2959	2958	1	15.0
3297	Guscio	2902	2903	2960	2959	1	15.0
3298	Guscio	2903	2904	2961	2960	1	15.0
3299	Guscio	2904	2905	2962	2961	1	15.0
3300	Guscio	2905	2906	2963	2962	1	15.0
3301	Guscio	2906	2907	2964	2963	1	15.0
3302	Guscio	2907	2908	2965	2964	1	15.0
3303	Guscio	2908	2909	2966	2965	1	15.0
3304	Guscio	2909	2910	2967	2966	1	15.0
3305	Guscio	2910	2911	2968	2967	1	15.0
3306	Guscio	2911	2912	2969	2968	1	15.0
3307	Guscio	2912	2913	2970	2969	1	15.0
3308	Guscio	2913	2914	2971	2970	1	15.0
3309	Guscio	2914	2915	2972	2971	1	15.0
3310	Guscio	2915	2916	2973	2972	1	15.0
3311	Guscio	2916	2917	2974	2973	1	15.0
3312	Guscio	2917	2918	2975	2974	1	15.0
3313	Guscio	2918	2919	2976	2975	1	15.0
3314	Guscio	2919	2920	2977	2976	1	15.0
3315	Guscio	2920	2921	2978	2977	1	15.0
3316	Guscio	2921	2922	2979	2978	1	15.0
3317	Guscio	2922	2923	2980	2979	1	15.0
3318	Guscio	2923	2924	2981	2980	1	15.0
3319	Guscio	2924	2925	2982	2981	1	15.0
3320	Guscio	2925	2926	2983	2982	1	15.0
3321	Guscio	2926	2927	2984	2983	1	15.0
3322	Guscio	2927	2928	2985	2984	1	15.0
3323	Guscio	2928	2929	2986	2985	1	15.0
3324	Guscio	2929	2930	2987	2986	1	15.0
3325	Guscio	2930	2931	2988	2987	1	15.0
3326	Guscio	2931	2932	2989	2988	1	15.0
3327	Guscio	2932	2933	2990	2989	1	15.0
3328	Guscio	2933	2934	2991	2990	1	15.0
3329	Guscio	2934	2935	2992	2991	1	15.0
3330	Guscio	2935	2936	2993	2992	1	15.0
3331	Guscio	2936	2937	2994	2993	1	15.0
3332	Guscio	2937	2938	2995	2994	1	15.0
3333	Guscio	2938	2939	2996	2995	1	15.0

3334	Guscio	2939	2940	2997	2996	1	15.0
3335	Guscio	2940	2941	2998	2997	1	15.0
3336	Guscio	2941	2942	2999	2998	1	15.0
3337	Guscio	2942	2943	3000	2999	1	15.0
3338	Guscio	2943	2944	3001	3000	1	15.0
3339	Guscio	2944	2945	3002	3001	1	15.0
3340	Guscio	2946	2947	3004	3003	1	15.0
3341	Guscio	2947	2948	3005	3004	1	15.0
3342	Guscio	2948	2949	3006	3005	1	15.0
3343	Guscio	2949	2950	3007	3006	1	15.0
3344	Guscio	2950	2951	3008	3007	1	15.0
3345	Guscio	2951	2952	3009	3008	1	15.0
3346	Guscio	2952	2953	3010	3009	1	15.0
3347	Guscio	2953	2954	3011	3010	1	15.0
3348	Guscio	2954	2955	3012	3011	1	15.0
3349	Guscio	2955	2956	3013	3012	1	15.0
3350	Guscio	2956	2957	3014	3013	1	15.0
3351	Guscio	2957	2958	3015	3014	1	15.0
3352	Guscio	2958	2959	3016	3015	1	15.0
3353	Guscio	2959	2960	3017	3016	1	15.0
3354	Guscio	2960	2961	3018	3017	1	15.0
3355	Guscio	2961	2962	3019	3018	1	15.0
3356	Guscio	2962	2963	3020	3019	1	15.0
3357	Guscio	2963	2964	3021	3020	1	15.0
3358	Guscio	2964	2965	3022	3021	1	15.0
3359	Guscio	2965	2966	3023	3022	1	15.0
3360	Guscio	2966	2967	3024	3023	1	15.0
3361	Guscio	2967	2968	3025	3024	1	15.0
3362	Guscio	2968	2969	3026	3025	1	15.0
3363	Guscio	2969	2970	3027	3026	1	15.0
3364	Guscio	2970	2971	3028	3027	1	15.0
3365	Guscio	2971	2972	3029	3028	1	15.0
3366	Guscio	2972	2973	3030	3029	1	15.0
3367	Guscio	2973	2974	3031	3030	1	15.0
3368	Guscio	2974	2975	3032	3031	1	15.0
3369	Guscio	2975	2976	3033	3032	1	15.0
3370	Guscio	2976	2977	3034	3033	1	15.0
3371	Guscio	2977	2978	3035	3034	1	15.0
3372	Guscio	2978	2979	3036	3035	1	15.0
3373	Guscio	2979	2980	3037	3036	1	15.0
3374	Guscio	2980	2981	3038	3037	1	15.0
3375	Guscio	2981	2982	3039	3038	1	15.0
3376	Guscio	2982	2983	3040	3039	1	15.0
3377	Guscio	2983	2984	3041	3040	1	15.0
3378	Guscio	2984	2985	3042	3041	1	15.0
3379	Guscio	2985	2986	3043	3042	1	15.0
3380	Guscio	2986	2987	3044	3043	1	15.0
3381	Guscio	2987	2988	3045	3044	1	15.0
3382	Guscio	2988	2989	3046	3045	1	15.0
3383	Guscio	2989	2990	3047	3046	1	15.0
3384	Guscio	2990	2991	3048	3047	1	15.0
3385	Guscio	2991	2992	3049	3048	1	15.0
3386	Guscio	2992	2993	3050	3049	1	15.0
3387	Guscio	2993	2994	3051	3050	1	15.0
3388	Guscio	2994	2995	3052	3051	1	15.0
3389	Guscio	2995	2996	3053	3052	1	15.0
3390	Guscio	2996	2997	3054	3053	1	15.0
3391	Guscio	2997	2998	3055	3054	1	15.0
3392	Guscio	2998	2999	3056	3055	1	15.0
3393	Guscio	2999	3000	3057	3056	1	15.0
3394	Guscio	3000	3001	3058	3057	1	15.0
3395	Guscio	3001	3002	3059	3058	1	15.0
3396	Setto	2712	2718	3066	3060	1	15.0
3397	Setto	2713	2728	3071	3061	1	15.0
3398	Setto	2714	2740	3077	3062	1	15.0
3399	Setto	2715	2752	3083	3063	1	15.0
3400	Setto	2716	2764	3089	3064	1	15.0
3401	Setto	2717	2774	3094	3065	1	15.0
3402	Setto	2718	2775	3095	3066	1	15.0
3403	Setto	2720	2777	3096	3067	1	15.0
3404	Setto	2722	2779	3097	3068	1	15.0
3405	Setto	2724	2781	3098	3069	1	15.0
3406	Setto	2726	2783	3099	3070	1	15.0
3407	Setto	2728	2785	3100	3071	1	15.0
3408	Setto	2730	2787	3101	3072	1	15.0
3409	Setto	2732	2789	3102	3073	1	15.0
3410	Setto	2734	2791	3103	3074	1	15.0
3411	Setto	2736	2793	3104	3075	1	15.0
3412	Setto	2738	2795	3105	3076	1	15.0

3413	Setto	2740	2797	3106	3077	1	15.0
3414	Setto	2742	2799	3107	3078	1	15.0
3415	Setto	2744	2801	3108	3079	1	15.0
3416	Setto	2746	2803	3109	3080	1	15.0
3417	Setto	2748	2805	3110	3081	1	15.0
3418	Setto	2750	2807	3111	3082	1	15.0
3419	Setto	2752	2809	3112	3083	1	15.0
3420	Setto	2754	2811	3113	3084	1	15.0
3421	Setto	2756	2813	3114	3085	1	15.0
3422	Setto	2758	2815	3115	3086	1	15.0
3423	Setto	2760	2817	3116	3087	1	15.0
3424	Setto	2762	2819	3117	3088	1	15.0
3425	Setto	2764	2821	3118	3089	1	15.0
3426	Setto	2766	2823	3119	3090	1	15.0
3427	Setto	2768	2825	3120	3091	1	15.0
3428	Setto	2770	2827	3121	3092	1	15.0
3429	Setto	2772	2829	3122	3093	1	15.0
3430	Setto	2774	2831	3123	3094	1	15.0
3431	Setto	2775	2832	3124	3095	1	15.0
3432	Setto	2777	2834	3125	3096	1	15.0
3433	Setto	2779	2836	3126	3097	1	15.0
3434	Setto	2781	2838	3127	3098	1	15.0
3435	Setto	2783	2840	3128	3099	1	15.0
3436	Setto	2785	2842	3129	3100	1	15.0
3437	Setto	2787	2844	3130	3101	1	15.0
3438	Setto	2789	2846	3131	3102	1	15.0
3439	Setto	2791	2848	3132	3103	1	15.0
3440	Setto	2793	2850	3133	3104	1	15.0
3441	Setto	2795	2852	3134	3105	1	15.0
3442	Setto	2797	2854	3135	3106	1	15.0
3443	Setto	2799	2856	3136	3107	1	15.0
3444	Setto	2801	2858	3137	3108	1	15.0
3445	Setto	2803	2860	3138	3109	1	15.0
3446	Setto	2805	2862	3139	3110	1	15.0
3447	Setto	2807	2864	3140	3111	1	15.0
3448	Setto	2809	2866	3141	3112	1	15.0
3449	Setto	2811	2868	3142	3113	1	15.0
3450	Setto	2813	2870	3143	3114	1	15.0
3451	Setto	2815	2872	3144	3115	1	15.0
3452	Setto	2817	2874	3145	3116	1	15.0
3453	Setto	2819	2876	3146	3117	1	15.0
3454	Setto	2821	2878	3147	3118	1	15.0
3455	Setto	2823	2880	3148	3119	1	15.0
3456	Setto	2825	2882	3149	3120	1	15.0
3457	Setto	2827	2884	3150	3121	1	15.0
3458	Setto	2829	2886	3151	3122	1	15.0
3459	Setto	2831	2888	3152	3123	1	15.0
3460	Setto	2832	2889	3153	3124	1	15.0
3461	Setto	2834	2891	3154	3125	1	15.0
3462	Setto	2836	2893	3155	3126	1	15.0
3463	Setto	2838	2895	3156	3127	1	15.0
3464	Setto	2840	2897	3157	3128	1	15.0
3465	Setto	2842	2899	3158	3129	1	15.0
3466	Setto	2844	2901	3159	3130	1	15.0
3467	Setto	2846	2903	3160	3131	1	15.0
3468	Setto	2848	2905	3161	3132	1	15.0
3469	Setto	2850	2907	3162	3133	1	15.0
3470	Setto	2852	2909	3163	3134	1	15.0
3471	Setto	2854	2911	3164	3135	1	15.0
3472	Setto	2856	2913	3165	3136	1	15.0
3473	Setto	2858	2915	3166	3137	1	15.0
3474	Setto	2860	2917	3167	3138	1	15.0
3475	Setto	2862	2919	3168	3139	1	15.0
3476	Setto	2864	2921	3169	3140	1	15.0
3477	Setto	2866	2923	3170	3141	1	15.0
3478	Setto	2868	2925	3171	3142	1	15.0
3479	Setto	2870	2927	3172	3143	1	15.0
3480	Setto	2872	2929	3173	3144	1	15.0
3481	Setto	2874	2931	3174	3145	1	15.0
3482	Setto	2876	2933	3175	3146	1	15.0
3483	Setto	2878	2935	3176	3147	1	15.0
3484	Setto	2880	2937	3177	3148	1	15.0
3485	Setto	2882	2939	3178	3149	1	15.0
3486	Setto	2884	2941	3179	3150	1	15.0
3487	Setto	2886	2943	3180	3151	1	15.0
3488	Setto	2888	2945	3181	3152	1	15.0
3489	Setto	2889	2946	3182	3153	1	15.0
3490	Setto	2891	2948	3183	3154	1	15.0
3491	Setto	2893	2950	3184	3155	1	15.0

3492	Setto	2895	2952	3185	3156	1	15.0
3493	Setto	2897	2954	3186	3157	1	15.0
3494	Setto	2899	2956	3187	3158	1	15.0
3495	Setto	2901	2958	3188	3159	1	15.0
3496	Setto	2903	2960	3189	3160	1	15.0
3497	Setto	2905	2962	3190	3161	1	15.0
3498	Setto	2907	2964	3191	3162	1	15.0
3499	Setto	2909	2966	3192	3163	1	15.0
3500	Setto	2911	2968	3193	3164	1	15.0
3501	Setto	2913	2970	3194	3165	1	15.0
3502	Setto	2915	2972	3195	3166	1	15.0
3503	Setto	2917	2974	3196	3167	1	15.0
3504	Setto	2919	2976	3197	3168	1	15.0
3505	Setto	2921	2978	3198	3169	1	15.0
3506	Setto	2923	2980	3199	3170	1	15.0
3507	Setto	2935	2992	3205	3176	1	15.0
3508	Setto	2945	3002	3210	3181	1	15.0
3509	Setto	2946	3003	3211	3182	1	15.0
3510	Setto	2948	3005	3213	3183	1	15.0
3511	Setto	2950	3007	3215	3184	1	15.0
3512	Setto	2952	3009	3217	3185	1	15.0
3513	Setto	2954	3011	3219	3186	1	15.0
3514	Setto	2956	3013	3221	3187	1	15.0
3515	Setto	2958	3015	3223	3188	1	15.0
3516	Setto	2960	3017	3225	3189	1	15.0
3517	Setto	2962	3019	3227	3190	1	15.0
3518	Setto	2964	3021	3229	3191	1	15.0
3519	Setto	2966	3023	3231	3192	1	15.0
3520	Setto	2968	3025	3233	3193	1	15.0
3521	Setto	2970	3027	3235	3194	1	15.0
3522	Setto	2972	3029	3237	3195	1	15.0
3523	Setto	2974	3031	3239	3196	1	15.0
3524	Setto	2976	3033	3241	3197	1	15.0
3525	Setto	2978	3035	3243	3198	1	15.0
3526	Setto	2980	3037	3245	3199	1	15.0
3527	Setto	2982	3039	3247	3200	1	15.0
3528	Setto	2984	3041	3249	3201	1	15.0
3529	Setto	2986	3043	3251	3202	1	15.0
3530	Setto	2988	3045	3253	3203	1	15.0
3531	Setto	2990	3047	3255	3204	1	15.0
3532	Setto	2992	3049	3257	3205	1	15.0
3533	Setto	2994	3051	3259	3206	1	15.0
3534	Setto	2996	3053	3261	3207	1	15.0
3535	Setto	2998	3055	3263	3208	1	15.0
3536	Setto	3000	3057	3265	3209	1	15.0
3537	Setto	3002	3059	3267	3210	1	15.0
3538	Setto	3211	3212	3004	3003	1	15.0
3539	Setto	3212	3213	3005	3004	1	15.0
3540	Setto	3213	3214	3006	3005	1	15.0
3541	Setto	3214	3215	3007	3006	1	15.0
3542	Setto	3215	3216	3008	3007	1	15.0
3543	Setto	3216	3217	3009	3008	1	15.0
3544	Setto	3217	3218	3010	3009	1	15.0
3545	Setto	3218	3219	3011	3010	1	15.0
3546	Setto	3219	3220	3012	3011	1	15.0
3547	Setto	3220	3221	3013	3012	1	15.0
3548	Setto	3221	3222	3014	3013	1	15.0
3549	Setto	3222	3223	3015	3014	1	15.0
3550	Setto	3223	3224	3016	3015	1	15.0
3551	Setto	3224	3225	3017	3016	1	15.0
3552	Setto	3225	3226	3018	3017	1	15.0
3553	Setto	3226	3227	3019	3018	1	15.0
3554	Setto	3227	3228	3020	3019	1	15.0
3555	Setto	3228	3229	3021	3020	1	15.0
3556	Setto	3229	3230	3022	3021	1	15.0
3557	Setto	3230	3231	3023	3022	1	15.0
3558	Setto	3231	3232	3024	3023	1	15.0
3559	Setto	3232	3233	3025	3024	1	15.0
3560	Setto	3233	3234	3026	3025	1	15.0
3561	Setto	3234	3235	3027	3026	1	15.0
3562	Setto	3235	3236	3028	3027	1	15.0
3563	Setto	3236	3237	3029	3028	1	15.0
3564	Setto	3237	3238	3030	3029	1	15.0
3565	Setto	3238	3239	3031	3030	1	15.0
3566	Setto	3239	3240	3032	3031	1	15.0
3567	Setto	3240	3241	3033	3032	1	15.0
3568	Setto	3241	3242	3034	3033	1	15.0
3569	Setto	3242	3243	3035	3034	1	15.0
3570	Setto	3243	3244	3036	3035	1	15.0

3571	Setto	3244	3245	3037	3036	1	15.0
3572	Setto	3245	3246	3038	3037	1	15.0
3573	Setto	3246	3247	3039	3038	1	15.0
3574	Setto	3247	3248	3040	3039	1	15.0
3575	Setto	3248	3249	3041	3040	1	15.0
3576	Setto	3249	3250	3042	3041	1	15.0
3577	Setto	3250	3251	3043	3042	1	15.0
3578	Setto	3251	3252	3044	3043	1	15.0
3579	Setto	3252	3253	3045	3044	1	15.0
3580	Setto	3253	3254	3046	3045	1	15.0
3581	Setto	3254	3255	3047	3046	1	15.0
3582	Setto	3255	3256	3048	3047	1	15.0
3583	Setto	3256	3257	3049	3048	1	15.0
3584	Setto	3257	3258	3050	3049	1	15.0
3585	Setto	3258	3259	3051	3050	1	15.0
3586	Setto	3259	3260	3052	3051	1	15.0
3587	Setto	3260	3261	3053	3052	1	15.0
3588	Setto	3261	3262	3054	3053	1	15.0
3589	Setto	3262	3263	3055	3054	1	15.0
3590	Setto	3263	3264	3056	3055	1	15.0
3591	Setto	3264	3265	3057	3056	1	15.0
3592	Setto	3265	3266	3058	3057	1	15.0
3593	Setto	3266	3267	3059	3058	1	15.0
3594	Setto	3060	3066	3274	3268	1	15.0
3595	Setto	3061	3071	3279	3269	1	15.0
3596	Setto	3062	3077	3285	3270	1	15.0
3597	Setto	3063	3083	3291	3271	1	15.0
3598	Setto	3064	3089	3297	3272	1	15.0
3599	Setto	3065	3094	3302	3273	1	15.0
3600	Setto	3066	3095	3303	3274	1	15.0
3601	Setto	3067	3096	3304	3275	1	15.0
3602	Setto	3068	3097	3305	3276	1	15.0
3603	Setto	3069	3098	3306	3277	1	15.0
3604	Setto	3070	3099	3307	3278	1	15.0
3605	Setto	3071	3100	3308	3279	1	15.0
3606	Setto	3072	3101	3309	3280	1	15.0
3607	Setto	3073	3102	3310	3281	1	15.0
3608	Setto	3074	3103	3311	3282	1	15.0
3609	Setto	3075	3104	3312	3283	1	15.0
3610	Setto	3076	3105	3313	3284	1	15.0
3611	Setto	3077	3106	3314	3285	1	15.0
3612	Setto	3078	3107	3315	3286	1	15.0
3613	Setto	3079	3108	3316	3287	1	15.0
3614	Setto	3080	3109	3317	3288	1	15.0
3615	Setto	3081	3110	3318	3289	1	15.0
3616	Setto	3082	3111	3319	3290	1	15.0
3617	Setto	3083	3112	3320	3291	1	15.0
3618	Setto	3084	3113	3321	3292	1	15.0
3619	Setto	3085	3114	3322	3293	1	15.0
3620	Setto	3086	3115	3323	3294	1	15.0
3621	Setto	3087	3116	3324	3295	1	15.0
3622	Setto	3088	3117	3325	3296	1	15.0
3623	Setto	3089	3118	3326	3297	1	15.0
3624	Setto	3090	3119	3327	3298	1	15.0
3625	Setto	3091	3120	3328	3299	1	15.0
3626	Setto	3092	3121	3329	3300	1	15.0
3627	Setto	3093	3122	3330	3301	1	15.0
3628	Setto	3094	3123	3331	3302	1	15.0
3629	Setto	3095	3124	3332	3303	1	15.0
3630	Setto	3096	3125	3333	3304	1	15.0
3631	Setto	3097	3126	3334	3305	1	15.0
3632	Setto	3098	3127	3335	3306	1	15.0
3633	Setto	3099	3128	3336	3307	1	15.0
3634	Setto	3100	3129	3337	3308	1	15.0
3635	Setto	3101	3130	3338	3309	1	15.0
3636	Setto	3102	3131	3339	3310	1	15.0
3637	Setto	3103	3132	3340	3311	1	15.0
3638	Setto	3104	3133	3341	3312	1	15.0
3639	Setto	3105	3134	3342	3313	1	15.0
3640	Setto	3106	3135	3343	3314	1	15.0
3641	Setto	3107	3136	3344	3315	1	15.0
3642	Setto	3108	3137	3345	3316	1	15.0
3643	Setto	3109	3138	3346	3317	1	15.0
3644	Setto	3110	3139	3347	3318	1	15.0
3645	Setto	3111	3140	3348	3319	1	15.0
3646	Setto	3112	3141	3349	3320	1	15.0
3647	Setto	3113	3142	3350	3321	1	15.0
3648	Setto	3114	3143	3351	3322	1	15.0
3649	Setto	3115	3144	3352	3323	1	15.0

3650	Setto	3116	3145	3353	3324	1	15.0
3651	Setto	3117	3146	3354	3325	1	15.0
3652	Setto	3118	3147	3355	3326	1	15.0
3653	Setto	3119	3148	3356	3327	1	15.0
3654	Setto	3120	3149	3357	3328	1	15.0
3655	Setto	3121	3150	3358	3329	1	15.0
3656	Setto	3122	3151	3359	3330	1	15.0
3657	Setto	3123	3152	3360	3331	1	15.0
3658	Setto	3124	3153	3361	3332	1	15.0
3659	Setto	3125	3154	3362	3333	1	15.0
3660	Setto	3126	3155	3363	3334	1	15.0
3661	Setto	3127	3156	3364	3335	1	15.0
3662	Setto	3128	3157	3365	3336	1	15.0
3663	Setto	3129	3158	3366	3337	1	15.0
3664	Setto	3130	3159	3367	3338	1	15.0
3665	Setto	3131	3160	3368	3339	1	15.0
3666	Setto	3132	3161	3369	3340	1	15.0
3667	Setto	3133	3162	3370	3341	1	15.0
3668	Setto	3134	3163	3371	3342	1	15.0
3669	Setto	3135	3164	3372	3343	1	15.0
3670	Setto	3136	3165	3373	3344	1	15.0
3671	Setto	3137	3166	3374	3345	1	15.0
3672	Setto	3138	3167	3375	3346	1	15.0
3673	Setto	3139	3168	3376	3347	1	15.0
3674	Setto	3140	3169	3377	3348	1	15.0
3675	Setto	3141	3170	3378	3349	1	15.0
3676	Setto	3142	3171	3379	3350	1	15.0
3677	Setto	3143	3172	3380	3351	1	15.0
3678	Setto	3144	3173	3381	3352	1	15.0
3679	Setto	3145	3174	3382	3353	1	15.0
3680	Setto	3146	3175	3383	3354	1	15.0
3681	Setto	3147	3176	3384	3355	1	15.0
3682	Setto	3148	3177	3385	3356	1	15.0
3683	Setto	3149	3178	3386	3357	1	15.0
3684	Setto	3150	3179	3387	3358	1	15.0
3685	Setto	3151	3180	3388	3359	1	15.0
3686	Setto	3152	3181	3389	3360	1	15.0
3687	Setto	3153	3182	3390	3361	1	15.0
3688	Setto	3154	3183	3391	3362	1	15.0
3689	Setto	3155	3184	3392	3363	1	15.0
3690	Setto	3156	3185	3393	3364	1	15.0
3691	Setto	3157	3186	3394	3365	1	15.0
3692	Setto	3158	3187	3395	3366	1	15.0
3693	Setto	3159	3188	3396	3367	1	15.0
3694	Setto	3160	3189	3397	3368	1	15.0
3695	Setto	3161	3190	3398	3369	1	15.0
3696	Setto	3162	3191	3399	3370	1	15.0
3697	Setto	3163	3192	3400	3371	1	15.0
3698	Setto	3164	3193	3401	3372	1	15.0
3699	Setto	3165	3194	3402	3373	1	15.0
3700	Setto	3166	3195	3403	3374	1	15.0
3701	Setto	3167	3196	3404	3375	1	15.0
3702	Setto	3168	3197	3405	3376	1	15.0
3703	Setto	3169	3198	3406	3377	1	15.0
3704	Setto	3170	3199	3407	3378	1	15.0
3705	Setto	3171	3200	3408	3379	1	15.0
3706	Setto	3172	3201	3409	3380	1	15.0
3707	Setto	3173	3202	3410	3381	1	15.0
3708	Setto	3174	3203	3411	3382	1	15.0
3709	Setto	3175	3204	3412	3383	1	15.0
3710	Setto	3176	3205	3413	3384	1	15.0
3711	Setto	3177	3206	3414	3385	1	15.0
3712	Setto	3178	3207	3415	3386	1	15.0
3713	Setto	3179	3208	3416	3387	1	15.0
3714	Setto	3180	3209	3417	3388	1	15.0
3715	Setto	3181	3210	3418	3389	1	15.0
3716	Setto	3182	3211	3419	3390	1	15.0
3717	Setto	3183	3213	3421	3391	1	15.0
3718	Setto	3184	3215	3423	3392	1	15.0
3719	Setto	3185	3217	3425	3393	1	15.0
3720	Setto	3186	3219	3427	3394	1	15.0
3721	Setto	3187	3221	3429	3395	1	15.0
3722	Setto	3188	3223	3431	3396	1	15.0
3723	Setto	3189	3225	3433	3397	1	15.0
3724	Setto	3190	3227	3435	3398	1	15.0
3725	Setto	3191	3229	3437	3399	1	15.0
3726	Setto	3192	3231	3439	3400	1	15.0
3727	Setto	3193	3233	3441	3401	1	15.0
3728	Setto	3194	3235	3443	3402	1	15.0

3729	Setto	3195	3237	3445	3403	1	15.0
3730	Setto	3196	3239	3447	3404	1	15.0
3731	Setto	3197	3241	3449	3405	1	15.0
3732	Setto	3198	3243	3451	3406	1	15.0
3733	Setto	3199	3245	3453	3407	1	15.0
3734	Setto	3200	3247	3455	3408	1	15.0
3735	Setto	3201	3249	3457	3409	1	15.0
3736	Setto	3202	3251	3459	3410	1	15.0
3737	Setto	3203	3253	3461	3411	1	15.0
3738	Setto	3204	3255	3463	3412	1	15.0
3739	Setto	3205	3257	3465	3413	1	15.0
3740	Setto	3206	3259	3467	3414	1	15.0
3741	Setto	3207	3261	3469	3415	1	15.0
3742	Setto	3208	3263	3471	3416	1	15.0
3743	Setto	3209	3265	3473	3417	1	15.0
3744	Setto	3210	3267	3475	3418	1	15.0
3745	Setto	3419	3420	3212	3211	1	15.0
3746	Setto	3420	3421	3213	3212	1	15.0
3747	Setto	3421	3422	3214	3213	1	15.0
3748	Setto	3422	3423	3215	3214	1	15.0
3749	Setto	3423	3424	3216	3215	1	15.0
3750	Setto	3424	3425	3217	3216	1	15.0
3751	Setto	3425	3426	3218	3217	1	15.0
3752	Setto	3426	3427	3219	3218	1	15.0
3753	Setto	3427	3428	3220	3219	1	15.0
3754	Setto	3428	3429	3221	3220	1	15.0
3755	Setto	3429	3430	3222	3221	1	15.0
3756	Setto	3430	3431	3223	3222	1	15.0
3757	Setto	3431	3432	3224	3223	1	15.0
3758	Setto	3432	3433	3225	3224	1	15.0
3759	Setto	3433	3434	3226	3225	1	15.0
3760	Setto	3434	3435	3227	3226	1	15.0
3761	Setto	3435	3436	3228	3227	1	15.0
3762	Setto	3436	3437	3229	3228	1	15.0
3763	Setto	3437	3438	3230	3229	1	15.0
3764	Setto	3438	3439	3231	3230	1	15.0
3765	Setto	3439	3440	3232	3231	1	15.0
3766	Setto	3440	3441	3233	3232	1	15.0
3767	Setto	3441	3442	3234	3233	1	15.0
3768	Setto	3442	3443	3235	3234	1	15.0
3769	Setto	3443	3444	3236	3235	1	15.0
3770	Setto	3444	3445	3237	3236	1	15.0
3771	Setto	3445	3446	3238	3237	1	15.0
3772	Setto	3446	3447	3239	3238	1	15.0
3773	Setto	3447	3448	3240	3239	1	15.0
3774	Setto	3448	3449	3241	3240	1	15.0
3775	Setto	3449	3450	3242	3241	1	15.0
3776	Setto	3450	3451	3243	3242	1	15.0
3777	Setto	3451	3452	3244	3243	1	15.0
3778	Setto	3452	3453	3245	3244	1	15.0
3779	Setto	3453	3454	3246	3245	1	15.0
3780	Setto	3454	3455	3247	3246	1	15.0
3781	Setto	3455	3456	3248	3247	1	15.0
3782	Setto	3456	3457	3249	3248	1	15.0
3783	Setto	3457	3458	3250	3249	1	15.0
3784	Setto	3458	3459	3251	3250	1	15.0
3785	Setto	3459	3460	3252	3251	1	15.0
3786	Setto	3460	3461	3253	3252	1	15.0
3787	Setto	3461	3462	3254	3253	1	15.0
3788	Setto	3462	3463	3255	3254	1	15.0
3789	Setto	3463	3464	3256	3255	1	15.0
3790	Setto	3464	3465	3257	3256	1	15.0
3791	Setto	3465	3466	3258	3257	1	15.0
3792	Setto	3466	3467	3259	3258	1	15.0
3793	Setto	3467	3468	3260	3259	1	15.0
3794	Setto	3468	3469	3261	3260	1	15.0
3795	Setto	3469	3470	3262	3261	1	15.0
3796	Setto	3470	3471	3263	3262	1	15.0
3797	Setto	3471	3472	3264	3263	1	15.0
3798	Setto	3472	3473	3265	3264	1	15.0
3799	Setto	3473	3474	3266	3265	1	15.0
3800	Setto	3474	3475	3267	3266	1	15.0
3801	Setto	3268	3274	3488	3482	1	15.0
3802	Setto	3269	3279	3498	3483	1	15.0
3803	Setto	3270	3285	3510	3484	1	15.0
3804	Setto	3271	3291	3522	3485	1	15.0
3805	Setto	3272	3297	3534	3486	1	15.0
3806	Setto	3273	3302	3544	3487	1	15.0
3807	Setto	3274	3303	3545	3488	1	15.0

3808	Setto	3275	3304	3547	3490	1	15.0
3809	Setto	3276	3305	3549	3492	1	15.0
3810	Setto	3277	3306	3551	3494	1	15.0
3811	Setto	3278	3307	3553	3496	1	15.0
3812	Setto	3279	3308	3555	3498	1	15.0
3813	Setto	3280	3309	3557	3500	1	15.0
3814	Setto	3281	3310	3559	3502	1	15.0
3815	Setto	3282	3311	3561	3504	1	15.0
3816	Setto	3283	3312	3563	3506	1	15.0
3817	Setto	3284	3313	3565	3508	1	15.0
3818	Setto	3285	3314	3567	3510	1	15.0
3819	Setto	3286	3315	3569	3512	1	15.0
3820	Setto	3287	3316	3571	3514	1	15.0
3821	Setto	3288	3317	3573	3516	1	15.0
3822	Setto	3289	3318	3575	3518	1	15.0
3823	Setto	3290	3319	3577	3520	1	15.0
3824	Setto	3291	3320	3579	3522	1	15.0
3825	Setto	3292	3321	3581	3524	1	15.0
3826	Setto	3293	3322	3583	3526	1	15.0
3827	Setto	3294	3323	3585	3528	1	15.0
3828	Setto	3295	3324	3587	3530	1	15.0
3829	Setto	3296	3325	3589	3532	1	15.0
3830	Setto	3297	3326	3591	3534	1	15.0
3831	Setto	3298	3327	3593	3536	1	15.0
3832	Setto	3299	3328	3595	3538	1	15.0
3833	Setto	3300	3329	3597	3540	1	15.0
3834	Setto	3301	3330	3599	3542	1	15.0
3835	Setto	3302	3331	3601	3544	1	15.0
3836	Setto	3303	3332	3602	3545	1	15.0
3837	Setto	3304	3333	3604	3547	1	15.0
3838	Setto	3305	3334	3606	3549	1	15.0
3839	Setto	3306	3335	3608	3551	1	15.0
3840	Setto	3307	3336	3610	3553	1	15.0
3841	Setto	3308	3337	3612	3555	1	15.0
3842	Setto	3309	3338	3614	3557	1	15.0
3843	Setto	3310	3339	3616	3559	1	15.0
3844	Setto	3311	3340	3618	3561	1	15.0
3845	Setto	3312	3341	3620	3563	1	15.0
3846	Setto	3313	3342	3622	3565	1	15.0
3847	Setto	3314	3343	3624	3567	1	15.0
3848	Setto	3315	3344	3626	3569	1	15.0
3849	Setto	3316	3345	3628	3571	1	15.0
3850	Setto	3317	3346	3630	3573	1	15.0
3851	Setto	3318	3347	3632	3575	1	15.0
3852	Setto	3319	3348	3634	3577	1	15.0
3853	Setto	3320	3349	3636	3579	1	15.0
3854	Setto	3321	3350	3638	3581	1	15.0
3855	Setto	3322	3351	3640	3583	1	15.0
3856	Setto	3323	3352	3642	3585	1	15.0
3857	Setto	3324	3353	3644	3587	1	15.0
3858	Setto	3325	3354	3646	3589	1	15.0
3859	Setto	3326	3355	3648	3591	1	15.0
3860	Setto	3327	3356	3650	3593	1	15.0
3861	Setto	3328	3357	3652	3595	1	15.0
3862	Setto	3329	3358	3654	3597	1	15.0
3863	Setto	3330	3359	3656	3599	1	15.0
3864	Setto	3331	3360	3658	3601	1	15.0
3865	Setto	3332	3361	3659	3602	1	15.0
3866	Setto	3333	3362	3661	3604	1	15.0
3867	Setto	3334	3363	3663	3606	1	15.0
3868	Setto	3335	3364	3665	3608	1	15.0
3869	Setto	3336	3365	3667	3610	1	15.0
3870	Setto	3337	3366	3669	3612	1	15.0
3871	Setto	3338	3367	3671	3614	1	15.0
3872	Setto	3339	3368	3673	3616	1	15.0
3873	Setto	3340	3369	3675	3618	1	15.0
3874	Setto	3341	3370	3677	3620	1	15.0
3875	Setto	3342	3371	3679	3622	1	15.0
3876	Setto	3343	3372	3681	3624	1	15.0
3877	Setto	3344	3373	3683	3626	1	15.0
3878	Setto	3345	3374	3685	3628	1	15.0
3879	Setto	3346	3375	3687	3630	1	15.0
3880	Setto	3347	3376	3689	3632	1	15.0
3881	Setto	3348	3377	3691	3634	1	15.0
3882	Setto	3349	3378	3693	3636	1	15.0
3883	Setto	3350	3379	3695	3638	1	15.0
3884	Setto	3351	3380	3697	3640	1	15.0
3885	Setto	3352	3381	3699	3642	1	15.0
3886	Setto	3353	3382	3701	3644	1	15.0

3887	Setto	3354	3383	3703	3646	1	15.0
3888	Setto	3355	3384	3705	3648	1	15.0
3889	Setto	3356	3385	3707	3650	1	15.0
3890	Setto	3357	3386	3709	3652	1	15.0
3891	Setto	3358	3387	3711	3654	1	15.0
3892	Setto	3359	3388	3713	3656	1	15.0
3893	Setto	3360	3389	3715	3658	1	15.0
3894	Setto	3361	3390	3716	3659	1	15.0
3895	Setto	3362	3391	3718	3661	1	15.0
3896	Setto	3363	3392	3720	3663	1	15.0
3897	Setto	3364	3393	3722	3665	1	15.0
3898	Setto	3365	3394	3724	3667	1	15.0
3899	Setto	3366	3395	3726	3669	1	15.0
3900	Setto	3367	3396	3728	3671	1	15.0
3901	Setto	3368	3397	3730	3673	1	15.0
3902	Setto	3369	3398	3732	3675	1	15.0
3903	Setto	3370	3399	3734	3677	1	15.0
3904	Setto	3371	3400	3736	3679	1	15.0
3905	Setto	3372	3401	3738	3681	1	15.0
3906	Setto	3373	3402	3740	3683	1	15.0
3907	Setto	3374	3403	3742	3685	1	15.0
3908	Setto	3375	3404	3744	3687	1	15.0
3909	Setto	3376	3405	3746	3689	1	15.0
3910	Setto	3377	3406	3748	3691	1	15.0
3911	Setto	3378	3407	3750	3693	1	15.0
3912	Setto	3379	3408	3752	3695	1	15.0
3913	Setto	3380	3409	3754	3697	1	15.0
3914	Setto	3381	3410	3756	3699	1	15.0
3915	Setto	3382	3411	3758	3701	1	15.0
3916	Setto	3383	3412	3760	3703	1	15.0
3917	Setto	3384	3413	3762	3705	1	15.0
3918	Setto	3385	3414	3764	3707	1	15.0
3919	Setto	3386	3415	3766	3709	1	15.0
3920	Setto	3387	3416	3768	3711	1	15.0
3921	Setto	3388	3417	3770	3713	1	15.0
3922	Setto	3389	3418	3772	3715	1	15.0
3923	Setto	3390	3419	3773	3716	1	15.0
3924	Setto	3391	3421	3775	3718	1	15.0
3925	Setto	3392	3423	3777	3720	1	15.0
3926	Setto	3393	3425	3779	3722	1	15.0
3927	Setto	3394	3427	3781	3724	1	15.0
3928	Setto	3395	3429	3783	3726	1	15.0
3929	Setto	3396	3431	3785	3728	1	15.0
3930	Setto	3397	3433	3787	3730	1	15.0
3931	Setto	3398	3435	3789	3732	1	15.0
3932	Setto	3399	3437	3791	3734	1	15.0
3933	Setto	3400	3439	3793	3736	1	15.0
3934	Setto	3401	3441	3795	3738	1	15.0
3935	Setto	3402	3443	3797	3740	1	15.0
3936	Setto	3403	3445	3799	3742	1	15.0
3937	Setto	3404	3447	3801	3744	1	15.0
3938	Setto	3405	3449	3803	3746	1	15.0
3939	Setto	3406	3451	3805	3748	1	15.0
3940	Setto	3407	3453	3807	3750	1	15.0
3941	Setto	3408	3455	3809	3752	1	15.0
3942	Setto	3409	3457	3811	3754	1	15.0
3943	Setto	3410	3459	3813	3756	1	15.0
3944	Setto	3411	3461	3815	3758	1	15.0
3945	Setto	3412	3463	3817	3760	1	15.0
3946	Setto	3413	3465	3819	3762	1	15.0
3947	Setto	3414	3467	3821	3764	1	15.0
3948	Setto	3415	3469	3823	3766	1	15.0
3949	Setto	3416	3471	3825	3768	1	15.0
3950	Setto	3417	3473	3827	3770	1	15.0
3951	Setto	3418	3475	3829	3772	1	15.0
3952	Setto	3773	3774	3420	3419	1	15.0
3953	Setto	3774	3775	3421	3420	1	15.0
3954	Setto	3775	3776	3422	3421	1	15.0
3955	Setto	3776	3777	3423	3422	1	15.0
3956	Setto	3777	3778	3424	3423	1	15.0
3957	Setto	3778	3779	3425	3424	1	15.0
3958	Setto	3779	3780	3426	3425	1	15.0
3959	Setto	3780	3781	3427	3426	1	15.0
3960	Setto	3781	3782	3428	3427	1	15.0
3961	Setto	3782	3783	3429	3428	1	15.0
3962	Setto	3783	3784	3430	3429	1	15.0
3963	Setto	3784	3785	3431	3430	1	15.0
3964	Setto	3785	3786	3432	3431	1	15.0
3965	Setto	3786	3787	3433	3432	1	15.0

3966	Setto	3787	3788	3434	3433	1	15.0
3967	Setto	3788	3789	3435	3434	1	15.0
3968	Setto	3789	3790	3436	3435	1	15.0
3969	Setto	3790	3791	3437	3436	1	15.0
3970	Setto	3791	3792	3438	3437	1	15.0
3971	Setto	3792	3793	3439	3438	1	15.0
3972	Setto	3793	3794	3440	3439	1	15.0
3973	Setto	3794	3795	3441	3440	1	15.0
3974	Setto	3795	3796	3442	3441	1	15.0
3975	Setto	3796	3797	3443	3442	1	15.0
3976	Setto	3797	3798	3444	3443	1	15.0
3977	Setto	3798	3799	3445	3444	1	15.0
3978	Setto	3799	3800	3446	3445	1	15.0
3979	Setto	3800	3801	3447	3446	1	15.0
3980	Setto	3801	3802	3448	3447	1	15.0
3981	Setto	3802	3803	3449	3448	1	15.0
3982	Setto	3803	3804	3450	3449	1	15.0
3983	Setto	3804	3805	3451	3450	1	15.0
3984	Setto	3805	3806	3452	3451	1	15.0
3985	Setto	3806	3807	3453	3452	1	15.0
3986	Setto	3807	3808	3454	3453	1	15.0
3987	Setto	3808	3809	3455	3454	1	15.0
3988	Setto	3809	3810	3456	3455	1	15.0
3989	Setto	3810	3811	3457	3456	1	15.0
3990	Setto	3811	3812	3458	3457	1	15.0
3991	Setto	3812	3813	3459	3458	1	15.0
3992	Setto	3813	3814	3460	3459	1	15.0
3993	Setto	3814	3815	3461	3460	1	15.0
3994	Setto	3815	3816	3462	3461	1	15.0
3995	Setto	3816	3817	3463	3462	1	15.0
3996	Setto	3817	3818	3464	3463	1	15.0
3997	Setto	3818	3819	3465	3464	1	15.0
3998	Setto	3819	3820	3466	3465	1	15.0
3999	Setto	3820	3821	3467	3466	1	15.0
4000	Setto	3821	3822	3468	3467	1	15.0
4001	Setto	3822	3823	3469	3468	1	15.0
4002	Setto	3823	3824	3470	3469	1	15.0
4003	Setto	3824	3825	3471	3470	1	15.0
4004	Setto	3825	3826	3472	3471	1	15.0
4005	Setto	3826	3827	3473	3472	1	15.0
4006	Setto	3827	3828	3474	3473	1	15.0
4007	Setto	3828	3829	3475	3474	1	15.0
4008	Guscio	3488	3489	3546	3545	1	15.0
4009	Guscio	3489	3490	3547	3546	1	15.0
4010	Guscio	3490	3491	3548	3547	1	15.0
4011	Guscio	3491	3492	3549	3548	1	15.0
4012	Guscio	3492	3493	3550	3549	1	15.0
4013	Guscio	3493	3494	3551	3550	1	15.0
4014	Guscio	3494	3495	3552	3551	1	15.0
4015	Guscio	3495	3496	3553	3552	1	15.0
4016	Guscio	3496	3497	3554	3553	1	15.0
4017	Guscio	3497	3498	3555	3554	1	15.0
4018	Guscio	3498	3499	3556	3555	1	15.0
4019	Guscio	3499	3500	3557	3556	1	15.0
4020	Guscio	3500	3501	3558	3557	1	15.0
4021	Guscio	3501	3502	3559	3558	1	15.0
4022	Guscio	3502	3503	3560	3559	1	15.0
4023	Guscio	3503	3504	3561	3560	1	15.0
4024	Guscio	3504	3505	3562	3561	1	15.0
4025	Guscio	3505	3506	3563	3562	1	15.0
4026	Guscio	3506	3507	3564	3563	1	15.0
4027	Guscio	3507	3508	3565	3564	1	15.0
4028	Guscio	3508	3509	3566	3565	1	15.0
4029	Guscio	3509	3510	3567	3566	1	15.0
4030	Guscio	3510	3511	3568	3567	1	15.0
4031	Guscio	3511	3512	3569	3568	1	15.0
4032	Guscio	3512	3513	3570	3569	1	15.0
4033	Guscio	3513	3514	3571	3570	1	15.0
4034	Guscio	3514	3515	3572	3571	1	15.0
4035	Guscio	3515	3516	3573	3572	1	15.0
4036	Guscio	3516	3517	3574	3573	1	15.0
4037	Guscio	3517	3518	3575	3574	1	15.0
4038	Guscio	3518	3519	3576	3575	1	15.0
4039	Guscio	3519	3520	3577	3576	1	15.0
4040	Guscio	3520	3521	3578	3577	1	15.0
4041	Guscio	3521	3522	3579	3578	1	15.0
4042	Guscio	3522	3523	3580	3579	1	15.0
4043	Guscio	3523	3524	3581	3580	1	15.0
4044	Guscio	3524	3525	3582	3581	1	15.0

4045	Guscio	3525	3526	3583	3582	1	15.0
4046	Guscio	3526	3527	3584	3583	1	15.0
4047	Guscio	3527	3528	3585	3584	1	15.0
4048	Guscio	3528	3529	3586	3585	1	15.0
4049	Guscio	3529	3530	3587	3586	1	15.0
4050	Guscio	3530	3531	3588	3587	1	15.0
4051	Guscio	3531	3532	3589	3588	1	15.0
4052	Guscio	3532	3533	3590	3589	1	15.0
4053	Guscio	3533	3534	3591	3590	1	15.0
4054	Guscio	3534	3535	3592	3591	1	15.0
4055	Guscio	3535	3536	3593	3592	1	15.0
4056	Guscio	3536	3537	3594	3593	1	15.0
4057	Guscio	3537	3538	3595	3594	1	15.0
4058	Guscio	3538	3539	3596	3595	1	15.0
4059	Guscio	3539	3540	3597	3596	1	15.0
4060	Guscio	3540	3541	3598	3597	1	15.0
4061	Guscio	3541	3542	3599	3598	1	15.0
4062	Guscio	3542	3543	3600	3599	1	15.0
4063	Guscio	3543	3544	3601	3600	1	15.0
4064	Guscio	3545	3546	3603	3602	1	15.0
4065	Guscio	3546	3547	3604	3603	1	15.0
4066	Guscio	3547	3548	3605	3604	1	15.0
4067	Guscio	3548	3549	3606	3605	1	15.0
4068	Guscio	3549	3550	3607	3606	1	15.0
4069	Guscio	3550	3551	3608	3607	1	15.0
4070	Guscio	3551	3552	3609	3608	1	15.0
4071	Guscio	3552	3553	3610	3609	1	15.0
4072	Guscio	3553	3554	3611	3610	1	15.0
4073	Guscio	3554	3555	3612	3611	1	15.0
4074	Guscio	3555	3556	3613	3612	1	15.0
4075	Guscio	3556	3557	3614	3613	1	15.0
4076	Guscio	3557	3558	3615	3614	1	15.0
4077	Guscio	3558	3559	3616	3615	1	15.0
4078	Guscio	3559	3560	3617	3616	1	15.0
4079	Guscio	3560	3561	3618	3617	1	15.0
4080	Guscio	3561	3562	3619	3618	1	15.0
4081	Guscio	3562	3563	3620	3619	1	15.0
4082	Guscio	3563	3564	3621	3620	1	15.0
4083	Guscio	3564	3565	3622	3621	1	15.0
4084	Guscio	3565	3566	3623	3622	1	15.0
4085	Guscio	3566	3567	3624	3623	1	15.0
4086	Guscio	3567	3568	3625	3624	1	15.0
4087	Guscio	3568	3569	3626	3625	1	15.0
4088	Guscio	3569	3570	3627	3626	1	15.0
4089	Guscio	3570	3571	3628	3627	1	15.0
4090	Guscio	3571	3572	3629	3628	1	15.0
4091	Guscio	3572	3573	3630	3629	1	15.0
4092	Guscio	3573	3574	3631	3630	1	15.0
4093	Guscio	3574	3575	3632	3631	1	15.0
4094	Guscio	3575	3576	3633	3632	1	15.0
4095	Guscio	3576	3577	3634	3633	1	15.0
4096	Guscio	3577	3578	3635	3634	1	15.0
4097	Guscio	3578	3579	3636	3635	1	15.0
4098	Guscio	3579	3580	3637	3636	1	15.0
4099	Guscio	3580	3581	3638	3637	1	15.0
4100	Guscio	3581	3582	3639	3638	1	15.0
4101	Guscio	3582	3583	3640	3639	1	15.0
4102	Guscio	3583	3584	3641	3640	1	15.0
4103	Guscio	3584	3585	3642	3641	1	15.0
4104	Guscio	3585	3586	3643	3642	1	15.0
4105	Guscio	3586	3587	3644	3643	1	15.0
4106	Guscio	3587	3588	3645	3644	1	15.0
4107	Guscio	3588	3589	3646	3645	1	15.0
4108	Guscio	3589	3590	3647	3646	1	15.0
4109	Guscio	3590	3591	3648	3647	1	15.0
4110	Guscio	3591	3592	3649	3648	1	15.0
4111	Guscio	3592	3593	3650	3649	1	15.0
4112	Guscio	3593	3594	3651	3650	1	15.0
4113	Guscio	3594	3595	3652	3651	1	15.0
4114	Guscio	3595	3596	3653	3652	1	15.0
4115	Guscio	3596	3597	3654	3653	1	15.0
4116	Guscio	3597	3598	3655	3654	1	15.0
4117	Guscio	3598	3599	3656	3655	1	15.0
4118	Guscio	3599	3600	3657	3656	1	15.0
4119	Guscio	3600	3601	3658	3657	1	15.0
4120	Guscio	3602	3603	3660	3659	1	15.0
4121	Guscio	3603	3604	3661	3660	1	15.0
4122	Guscio	3604	3605	3662	3661	1	15.0
4123	Guscio	3605	3606	3663	3662	1	15.0

4124	Guscio	3606	3607	3664	3663	1	15.0
4125	Guscio	3607	3608	3665	3664	1	15.0
4126	Guscio	3608	3609	3666	3665	1	15.0
4127	Guscio	3609	3610	3667	3666	1	15.0
4128	Guscio	3610	3611	3668	3667	1	15.0
4129	Guscio	3611	3612	3669	3668	1	15.0
4130	Guscio	3612	3613	3670	3669	1	15.0
4131	Guscio	3613	3614	3671	3670	1	15.0
4132	Guscio	3614	3615	3672	3671	1	15.0
4133	Guscio	3615	3616	3673	3672	1	15.0
4134	Guscio	3616	3617	3674	3673	1	15.0
4135	Guscio	3617	3618	3675	3674	1	15.0
4136	Guscio	3618	3619	3676	3675	1	15.0
4137	Guscio	3619	3620	3677	3676	1	15.0
4138	Guscio	3620	3621	3678	3677	1	15.0
4139	Guscio	3621	3622	3679	3678	1	15.0
4140	Guscio	3622	3623	3680	3679	1	15.0
4141	Guscio	3623	3624	3681	3680	1	15.0
4142	Guscio	3624	3625	3682	3681	1	15.0
4143	Guscio	3625	3626	3683	3682	1	15.0
4144	Guscio	3626	3627	3684	3683	1	15.0
4145	Guscio	3627	3628	3685	3684	1	15.0
4146	Guscio	3628	3629	3686	3685	1	15.0
4147	Guscio	3629	3630	3687	3686	1	15.0
4148	Guscio	3630	3631	3688	3687	1	15.0
4149	Guscio	3631	3632	3689	3688	1	15.0
4150	Guscio	3632	3633	3690	3689	1	15.0
4151	Guscio	3633	3634	3691	3690	1	15.0
4152	Guscio	3634	3635	3692	3691	1	15.0
4153	Guscio	3635	3636	3693	3692	1	15.0
4154	Guscio	3636	3637	3694	3693	1	15.0
4155	Guscio	3637	3638	3695	3694	1	15.0
4156	Guscio	3638	3639	3696	3695	1	15.0
4157	Guscio	3639	3640	3697	3696	1	15.0
4158	Guscio	3640	3641	3698	3697	1	15.0
4159	Guscio	3641	3642	3699	3698	1	15.0
4160	Guscio	3642	3643	3700	3699	1	15.0
4161	Guscio	3643	3644	3701	3700	1	15.0
4162	Guscio	3644	3645	3702	3701	1	15.0
4163	Guscio	3645	3646	3703	3702	1	15.0
4164	Guscio	3646	3647	3704	3703	1	15.0
4165	Guscio	3647	3648	3705	3704	1	15.0
4166	Guscio	3648	3649	3706	3705	1	15.0
4167	Guscio	3649	3650	3707	3706	1	15.0
4168	Guscio	3650	3651	3708	3707	1	15.0
4169	Guscio	3651	3652	3709	3708	1	15.0
4170	Guscio	3652	3653	3710	3709	1	15.0
4171	Guscio	3653	3654	3711	3710	1	15.0
4172	Guscio	3654	3655	3712	3711	1	15.0
4173	Guscio	3655	3656	3713	3712	1	15.0
4174	Guscio	3656	3657	3714	3713	1	15.0
4175	Guscio	3657	3658	3715	3714	1	15.0
4176	Guscio	3659	3660	3717	3716	1	15.0
4177	Guscio	3660	3661	3718	3717	1	15.0
4178	Guscio	3661	3662	3719	3718	1	15.0
4179	Guscio	3662	3663	3720	3719	1	15.0
4180	Guscio	3663	3664	3721	3720	1	15.0
4181	Guscio	3664	3665	3722	3721	1	15.0
4182	Guscio	3665	3666	3723	3722	1	15.0
4183	Guscio	3666	3667	3724	3723	1	15.0
4184	Guscio	3667	3668	3725	3724	1	15.0
4185	Guscio	3668	3669	3726	3725	1	15.0
4186	Guscio	3669	3670	3727	3726	1	15.0
4187	Guscio	3670	3671	3728	3727	1	15.0
4188	Guscio	3671	3672	3729	3728	1	15.0
4189	Guscio	3672	3673	3730	3729	1	15.0
4190	Guscio	3673	3674	3731	3730	1	15.0
4191	Guscio	3674	3675	3732	3731	1	15.0
4192	Guscio	3675	3676	3733	3732	1	15.0
4193	Guscio	3676	3677	3734	3733	1	15.0
4194	Guscio	3677	3678	3735	3734	1	15.0
4195	Guscio	3678	3679	3736	3735	1	15.0
4196	Guscio	3679	3680	3737	3736	1	15.0
4197	Guscio	3680	3681	3738	3737	1	15.0
4198	Guscio	3681	3682	3739	3738	1	15.0
4199	Guscio	3682	3683	3740	3739	1	15.0
4200	Guscio	3683	3684	3741	3740	1	15.0
4201	Guscio	3684	3685	3742	3741	1	15.0
4202	Guscio	3685	3686	3743	3742	1	15.0

4203	Guscio	3686	3687	3744	3743	1	15.0
4204	Guscio	3687	3688	3745	3744	1	15.0
4205	Guscio	3688	3689	3746	3745	1	15.0
4206	Guscio	3689	3690	3747	3746	1	15.0
4207	Guscio	3690	3691	3748	3747	1	15.0
4208	Guscio	3691	3692	3749	3748	1	15.0
4209	Guscio	3692	3693	3750	3749	1	15.0
4210	Guscio	3693	3694	3751	3750	1	15.0
4211	Guscio	3694	3695	3752	3751	1	15.0
4212	Guscio	3695	3696	3753	3752	1	15.0
4213	Guscio	3696	3697	3754	3753	1	15.0
4214	Guscio	3697	3698	3755	3754	1	15.0
4215	Guscio	3698	3699	3756	3755	1	15.0
4216	Guscio	3699	3700	3757	3756	1	15.0
4217	Guscio	3700	3701	3758	3757	1	15.0
4218	Guscio	3701	3702	3759	3758	1	15.0
4219	Guscio	3702	3703	3760	3759	1	15.0
4220	Guscio	3703	3704	3761	3760	1	15.0
4221	Guscio	3704	3705	3762	3761	1	15.0
4222	Guscio	3705	3706	3763	3762	1	15.0
4223	Guscio	3706	3707	3764	3763	1	15.0
4224	Guscio	3707	3708	3765	3764	1	15.0
4225	Guscio	3708	3709	3766	3765	1	15.0
4226	Guscio	3709	3710	3767	3766	1	15.0
4227	Guscio	3710	3711	3768	3767	1	15.0
4228	Guscio	3711	3712	3769	3768	1	15.0
4229	Guscio	3712	3713	3770	3769	1	15.0
4230	Guscio	3713	3714	3771	3770	1	15.0
4231	Guscio	3714	3715	3772	3771	1	15.0
4232	Guscio	3716	3717	3774	3773	1	15.0
4233	Guscio	3717	3718	3775	3774	1	15.0
4234	Guscio	3718	3719	3776	3775	1	15.0
4235	Guscio	3719	3720	3777	3776	1	15.0
4236	Guscio	3720	3721	3778	3777	1	15.0
4237	Guscio	3721	3722	3779	3778	1	15.0
4238	Guscio	3722	3723	3780	3779	1	15.0
4239	Guscio	3723	3724	3781	3780	1	15.0
4240	Guscio	3724	3725	3782	3781	1	15.0
4241	Guscio	3725	3726	3783	3782	1	15.0
4242	Guscio	3726	3727	3784	3783	1	15.0
4243	Guscio	3727	3728	3785	3784	1	15.0
4244	Guscio	3728	3729	3786	3785	1	15.0
4245	Guscio	3729	3730	3787	3786	1	15.0
4246	Guscio	3730	3731	3788	3787	1	15.0
4247	Guscio	3731	3732	3789	3788	1	15.0
4248	Guscio	3732	3733	3790	3789	1	15.0
4249	Guscio	3733	3734	3791	3790	1	15.0
4250	Guscio	3734	3735	3792	3791	1	15.0
4251	Guscio	3735	3736	3793	3792	1	15.0
4252	Guscio	3736	3737	3794	3793	1	15.0
4253	Guscio	3737	3738	3795	3794	1	15.0
4254	Guscio	3738	3739	3796	3795	1	15.0
4255	Guscio	3739	3740	3797	3796	1	15.0
4256	Guscio	3740	3741	3798	3797	1	15.0
4257	Guscio	3741	3742	3799	3798	1	15.0
4258	Guscio	3742	3743	3800	3799	1	15.0
4259	Guscio	3743	3744	3801	3800	1	15.0
4260	Guscio	3744	3745	3802	3801	1	15.0
4261	Guscio	3745	3746	3803	3802	1	15.0
4262	Guscio	3746	3747	3804	3803	1	15.0
4263	Guscio	3747	3748	3805	3804	1	15.0
4264	Guscio	3748	3749	3806	3805	1	15.0
4265	Guscio	3749	3750	3807	3806	1	15.0
4266	Guscio	3750	3751	3808	3807	1	15.0
4267	Guscio	3751	3752	3809	3808	1	15.0
4268	Guscio	3752	3753	3810	3809	1	15.0
4269	Guscio	3753	3754	3811	3810	1	15.0
4270	Guscio	3754	3755	3812	3811	1	15.0
4271	Guscio	3755	3756	3813	3812	1	15.0
4272	Guscio	3756	3757	3814	3813	1	15.0
4273	Guscio	3757	3758	3815	3814	1	15.0
4274	Guscio	3758	3759	3816	3815	1	15.0
4275	Guscio	3759	3760	3817	3816	1	15.0
4276	Guscio	3760	3761	3818	3817	1	15.0
4277	Guscio	3761	3762	3819	3818	1	15.0
4278	Guscio	3762	3763	3820	3819	1	15.0
4279	Guscio	3763	3764	3821	3820	1	15.0
4280	Guscio	3764	3765	3822	3821	1	15.0
4281	Guscio	3765	3766	3823	3822	1	15.0

4282	Guscio	3766	3767	3824	3823	1	15.0
4283	Guscio	3767	3768	3825	3824	1	15.0
4284	Guscio	3768	3769	3826	3825	1	15.0
4285	Guscio	3769	3770	3827	3826	1	15.0
4286	Guscio	3770	3771	3828	3827	1	15.0
4287	Guscio	3771	3772	3829	3828	1	15.0
4288	Setto	3482	3488	3866	3860	1	15.0
4289	Setto	3483	3498	3871	3861	1	15.0
4290	Setto	3484	3510	3877	3862	1	15.0
4291	Setto	3485	3522	3883	3863	1	15.0
4292	Setto	3486	3534	3889	3864	1	15.0
4293	Setto	3487	3544	3894	3865	1	15.0
4294	Setto	3488	3545	3895	3866	1	15.0
4295	Setto	3490	3547	3896	3867	1	15.0
4296	Setto	3492	3549	3897	3868	1	15.0
4297	Setto	3494	3551	3898	3869	1	15.0
4298	Setto	3496	3553	3899	3870	1	15.0
4299	Setto	3498	3555	3900	3871	1	15.0
4300	Setto	3500	3557	3901	3872	1	15.0
4301	Setto	3502	3559	3902	3873	1	15.0
4302	Setto	3504	3561	3903	3874	1	15.0
4303	Setto	3506	3563	3904	3875	1	15.0
4304	Setto	3508	3565	3905	3876	1	15.0
4305	Setto	3510	3567	3906	3877	1	15.0
4306	Setto	3512	3569	3907	3878	1	15.0
4307	Setto	3514	3571	3908	3879	1	15.0
4308	Setto	3516	3573	3909	3880	1	15.0
4309	Setto	3518	3575	3910	3881	1	15.0
4310	Setto	3520	3577	3911	3882	1	15.0
4311	Setto	3522	3579	3912	3883	1	15.0
4312	Setto	3524	3581	3913	3884	1	15.0
4313	Setto	3526	3583	3914	3885	1	15.0
4314	Setto	3528	3585	3915	3886	1	15.0
4315	Setto	3530	3587	3916	3887	1	15.0
4316	Setto	3532	3589	3917	3888	1	15.0
4317	Setto	3534	3591	3918	3889	1	15.0
4318	Setto	3536	3593	3919	3890	1	15.0
4319	Setto	3538	3595	3920	3891	1	15.0
4320	Setto	3540	3597	3921	3892	1	15.0
4321	Setto	3542	3599	3922	3893	1	15.0
4322	Setto	3544	3601	3923	3894	1	15.0
4323	Setto	3545	3602	3924	3895	1	15.0
4324	Setto	3547	3604	3925	3896	1	15.0
4325	Setto	3549	3606	3926	3897	1	15.0
4326	Setto	3551	3608	3927	3898	1	15.0
4327	Setto	3553	3610	3928	3899	1	15.0
4328	Setto	3555	3612	3929	3900	1	15.0
4329	Setto	3557	3614	3930	3901	1	15.0
4330	Setto	3559	3616	3931	3902	1	15.0
4331	Setto	3561	3618	3932	3903	1	15.0
4332	Setto	3563	3620	3933	3904	1	15.0
4333	Setto	3565	3622	3934	3905	1	15.0
4334	Setto	3567	3624	3935	3906	1	15.0
4335	Setto	3569	3626	3936	3907	1	15.0
4336	Setto	3571	3628	3937	3908	1	15.0
4337	Setto	3573	3630	3938	3909	1	15.0
4338	Setto	3575	3632	3939	3910	1	15.0
4339	Setto	3577	3634	3940	3911	1	15.0
4340	Setto	3579	3636	3941	3912	1	15.0
4341	Setto	3581	3638	3942	3913	1	15.0
4342	Setto	3583	3640	3943	3914	1	15.0
4343	Setto	3585	3642	3944	3915	1	15.0
4344	Setto	3587	3644	3945	3916	1	15.0
4345	Setto	3589	3646	3946	3917	1	15.0
4346	Setto	3591	3648	3947	3918	1	15.0
4347	Setto	3593	3650	3948	3919	1	15.0
4348	Setto	3595	3652	3949	3920	1	15.0
4349	Setto	3597	3654	3950	3921	1	15.0
4350	Setto	3599	3656	3951	3922	1	15.0
4351	Setto	3601	3658	3952	3923	1	15.0
4352	Setto	3602	3659	3953	3924	1	15.0
4353	Setto	3604	3661	3954	3925	1	15.0
4354	Setto	3606	3663	3955	3926	1	15.0
4355	Setto	3608	3665	3956	3927	1	15.0
4356	Setto	3610	3667	3957	3928	1	15.0
4357	Setto	3612	3669	3958	3929	1	15.0
4358	Setto	3614	3671	3959	3930	1	15.0
4359	Setto	3616	3673	3960	3931	1	15.0
4360	Setto	3618	3675	3961	3932	1	15.0

4361	Setto	3620	3677	3962	3933	1	15.0
4362	Setto	3622	3679	3963	3934	1	15.0
4363	Setto	3624	3681	3964	3935	1	15.0
4364	Setto	3626	3683	3965	3936	1	15.0
4365	Setto	3628	3685	3966	3937	1	15.0
4366	Setto	3630	3687	3967	3938	1	15.0
4367	Setto	3632	3689	3968	3939	1	15.0
4368	Setto	3634	3691	3969	3940	1	15.0
4369	Setto	3636	3693	3970	3941	1	15.0
4370	Setto	3638	3695	3971	3942	1	15.0
4371	Setto	3640	3697	3972	3943	1	15.0
4372	Setto	3642	3699	3973	3944	1	15.0
4373	Setto	3644	3701	3974	3945	1	15.0
4374	Setto	3646	3703	3975	3946	1	15.0
4375	Setto	3648	3705	3976	3947	1	15.0
4376	Setto	3650	3707	3977	3948	1	15.0
4377	Setto	3652	3709	3978	3949	1	15.0
4378	Setto	3654	3711	3979	3950	1	15.0
4379	Setto	3656	3713	3980	3951	1	15.0
4380	Setto	3658	3715	3981	3952	1	15.0
4381	Setto	3659	3716	3982	3953	1	15.0
4382	Setto	3661	3718	3983	3954	1	15.0
4383	Setto	3663	3720	3984	3955	1	15.0
4384	Setto	3665	3722	3985	3956	1	15.0
4385	Setto	3667	3724	3986	3957	1	15.0
4386	Setto	3669	3726	3987	3958	1	15.0
4387	Setto	3671	3728	3988	3959	1	15.0
4388	Setto	3673	3730	3989	3960	1	15.0
4389	Setto	3675	3732	3990	3961	1	15.0
4390	Setto	3677	3734	3991	3962	1	15.0
4391	Setto	3679	3736	3992	3963	1	15.0
4392	Setto	3681	3738	3993	3964	1	15.0
4393	Setto	3683	3740	3994	3965	1	15.0
4394	Setto	3685	3742	3995	3966	1	15.0
4395	Setto	3687	3744	3996	3967	1	15.0
4396	Setto	3689	3746	3997	3968	1	15.0
4397	Setto	3691	3748	3998	3969	1	15.0
4398	Setto	3693	3750	3999	3970	1	15.0
4399	Setto	3695	3752	4000	3971	1	15.0
4400	Setto	3697	3754	4001	3972	1	15.0
4401	Setto	3699	3756	4002	3973	1	15.0
4402	Setto	3701	3758	4003	3974	1	15.0
4403	Setto	3703	3760	4004	3975	1	15.0
4404	Setto	3705	3762	4005	3976	1	15.0
4405	Setto	3707	3764	4006	3977	1	15.0
4406	Setto	3709	3766	4007	3978	1	15.0
4407	Setto	3711	3768	4008	3979	1	15.0
4408	Setto	3713	3770	4009	3980	1	15.0
4409	Setto	3715	3772	4010	3981	1	15.0
4410	Setto	3716	3773	4011	3982	1	15.0
4411	Setto	3718	3775	4013	3983	1	15.0
4412	Setto	3720	3777	4015	3984	1	15.0
4413	Setto	3722	3779	4017	3985	1	15.0
4414	Setto	3724	3781	4019	3986	1	15.0
4415	Setto	3726	3783	4021	3987	1	15.0
4416	Setto	3728	3785	4023	3988	1	15.0
4417	Setto	3730	3787	4025	3989	1	15.0
4418	Setto	3732	3789	4027	3990	1	15.0
4419	Setto	3734	3791	4029	3991	1	15.0
4420	Setto	3736	3793	4031	3992	1	15.0
4421	Setto	3738	3795	4033	3993	1	15.0
4422	Setto	3740	3797	4035	3994	1	15.0
4423	Setto	3742	3799	4037	3995	1	15.0
4424	Setto	3744	3801	4039	3996	1	15.0
4425	Setto	3746	3803	4041	3997	1	15.0
4426	Setto	3748	3805	4043	3998	1	15.0
4427	Setto	3750	3807	4045	3999	1	15.0
4428	Setto	3762	3819	4057	4005	1	15.0
4429	Setto	3766	3823	4061	4007	1	15.0
4430	Setto	3768	3825	4063	4008	1	15.0
4431	Setto	3770	3827	4065	4009	1	15.0
4432	Setto	3772	3829	4067	4010	1	15.0
4433	Setto	4011	4012	3774	3773	1	15.0
4434	Setto	4012	4013	3775	3774	1	15.0
4435	Setto	4013	4014	3776	3775	1	15.0
4436	Setto	4014	4015	3777	3776	1	15.0
4437	Setto	4015	4016	3778	3777	1	15.0
4438	Setto	4016	4017	3779	3778	1	15.0
4439	Setto	4017	4018	3780	3779	1	15.0

4440	Setto	4018	4019	3781	3780	1	15.0
4441	Setto	4019	4020	3782	3781	1	15.0
4442	Setto	4020	4021	3783	3782	1	15.0
4443	Setto	4021	4022	3784	3783	1	15.0
4444	Setto	4022	4023	3785	3784	1	15.0
4445	Setto	4023	4024	3786	3785	1	15.0
4446	Setto	4024	4025	3787	3786	1	15.0
4447	Setto	4025	4026	3788	3787	1	15.0
4448	Setto	4026	4027	3789	3788	1	15.0
4449	Setto	4027	4028	3790	3789	1	15.0
4450	Setto	4028	4029	3791	3790	1	15.0
4451	Setto	4029	4030	3792	3791	1	15.0
4452	Setto	4030	4031	3793	3792	1	15.0
4453	Setto	4031	4032	3794	3793	1	15.0
4454	Setto	4032	4033	3795	3794	1	15.0
4455	Setto	4033	4034	3796	3795	1	15.0
4456	Setto	4034	4035	3797	3796	1	15.0
4457	Setto	4035	4036	3798	3797	1	15.0
4458	Setto	4036	4037	3799	3798	1	15.0
4459	Setto	4037	4038	3800	3799	1	15.0
4460	Setto	4038	4039	3801	3800	1	15.0
4461	Setto	4039	4040	3802	3801	1	15.0
4462	Setto	4040	4041	3803	3802	1	15.0
4463	Setto	4041	4042	3804	3803	1	15.0
4464	Setto	4042	4043	3805	3804	1	15.0
4465	Setto	4043	4044	3806	3805	1	15.0
4466	Setto	4044	4045	3807	3806	1	15.0
4467	Setto	4045	4046	3808	3807	1	15.0
4468	Setto	4046	4047	3809	3808	1	15.0
4469	Setto	4047	4048	3810	3809	1	15.0
4470	Setto	4048	4049	3811	3810	1	15.0
4471	Setto	4049	4050	3812	3811	1	15.0
4472	Setto	4050	4051	3813	3812	1	15.0
4473	Setto	4051	4052	3814	3813	1	15.0
4474	Setto	4052	4053	3815	3814	1	15.0
4475	Setto	4053	4054	3816	3815	1	15.0
4476	Setto	4054	4055	3817	3816	1	15.0
4477	Setto	4055	4056	3818	3817	1	15.0
4478	Setto	4056	4057	3819	3818	1	15.0
4479	Setto	4057	4058	3820	3819	1	15.0
4480	Setto	4058	4059	3821	3820	1	15.0
4481	Setto	4059	4060	3822	3821	1	15.0
4482	Setto	4060	4061	3823	3822	1	15.0
4483	Setto	4061	4062	3824	3823	1	15.0
4484	Setto	4062	4063	3825	3824	1	15.0
4485	Setto	4063	4064	3826	3825	1	15.0
4486	Setto	4064	4065	3827	3826	1	15.0
4487	Setto	4065	4066	3828	3827	1	15.0
4488	Setto	4066	4067	3829	3828	1	15.0
4489	Guscio	4076	4077	4136	4135	1	20.0
4490	Guscio	4077	4078	4137	4136	1	20.0
4491	Guscio	4078	4079	4138	4137	1	20.0
4492	Guscio	4079	4080	4139	4138	1	20.0
4493	Guscio	4080	4081	4140	4139	1	20.0
4494	Guscio	4081	4082	4141	4140	1	20.0
4495	Guscio	4082	4083	4142	4141	1	20.0
4496	Guscio	4083	4084	4143	4142	1	20.0
4497	Guscio	4084	4085	4144	4143	1	20.0
4498	Guscio	4085	4086	4145	4144	1	20.0
4499	Guscio	4086	4087	4146	4145	1	20.0
4500	Guscio	4087	4088	4147	4146	1	20.0
4501	Guscio	4088	4089	4148	4147	1	20.0
4502	Guscio	4089	4090	4149	4148	1	20.0
4503	Guscio	4090	4091	4150	4149	1	20.0
4504	Guscio	4091	4092	4151	4150	1	20.0
4505	Guscio	4092	4093	4152	4151	1	20.0
4506	Guscio	4093	4094	4153	4152	1	20.0
4507	Guscio	4094	4095	4154	4153	1	20.0
4508	Guscio	4095	4096	4155	4154	1	20.0
4509	Guscio	4096	4097	4156	4155	1	20.0
4510	Guscio	4097	4098	4157	4156	1	20.0
4511	Guscio	4098	4099	4158	4157	1	20.0
4512	Guscio	4099	4100	4159	4158	1	20.0
4513	Guscio	4100	4101	4160	4159	1	20.0
4514	Guscio	4101	4102	4161	4160	1	20.0
4515	Guscio	4102	4103	4162	4161	1	20.0
4516	Guscio	4103	4104	4163	4162	1	20.0
4517	Guscio	4104	4105	4164	4163	1	20.0
4518	Guscio	4105	4106	4165	4164	1	20.0

4519	Guscio	4106	4107	4166	4165	1	20.0
4520	Guscio	4107	4108	4167	4166	1	20.0
4521	Guscio	4108	4109	4168	4167	1	20.0
4522	Guscio	4109	4110	4169	4168	1	20.0
4523	Guscio	4110	4111	4170	4169	1	20.0
4524	Guscio	4111	4112	4171	4170	1	20.0
4525	Guscio	4112	4113	4172	4171	1	20.0
4526	Guscio	4113	4114	4173	4172	1	20.0
4527	Guscio	4114	4115	4174	4173	1	20.0
4528	Guscio	4115	4116	4175	4174	1	20.0
4529	Guscio	4116	4117	4176	4175	1	20.0
4530	Guscio	4117	4118	4177	4176	1	20.0
4531	Guscio	4118	4119	4178	4177	1	20.0
4532	Guscio	4119	4120	4179	4178	1	20.0
4533	Guscio	4120	4121	4180	4179	1	20.0
4534	Guscio	4121	4122	4181	4180	1	20.0
4535	Guscio	4122	4123	4182	4181	1	20.0
4536	Guscio	4123	4124	4183	4182	1	20.0
4537	Guscio	4124	4125	4184	4183	1	20.0
4538	Guscio	4125	4126	4185	4184	1	20.0
4539	Guscio	4126	4127	4186	4185	1	20.0
4540	Guscio	4127	4128	4187	4186	1	20.0
4541	Guscio	4128	4129	4188	4187	1	20.0
4542	Guscio	4129	4130	4189	4188	1	20.0
4543	Guscio	4130	4131	4190	4189	1	20.0
4544	Guscio	4131	4132	4191	4190	1	20.0
4545	Guscio	4132	4133	4192	4191	1	20.0
4546	Guscio	4133	4134	4193	4192	1	20.0
4547	Guscio	4135	4136	4195	4194	1	20.0
4548	Guscio	4136	4137	4196	4195	1	20.0
4549	Guscio	4137	4138	4197	4196	1	20.0
4550	Guscio	4138	4139	4198	4197	1	20.0
4551	Guscio	4139	4140	4199	4198	1	20.0
4552	Guscio	4140	4141	4200	4199	1	20.0
4553	Guscio	4141	4142	4201	4200	1	20.0
4554	Guscio	4142	4143	4202	4201	1	20.0
4555	Guscio	4143	4144	4203	4202	1	20.0
4556	Guscio	4144	4145	4204	4203	1	20.0
4557	Guscio	4145	4146	4205	4204	1	20.0
4558	Guscio	4146	4147	4206	4205	1	20.0
4559	Guscio	4147	4148	4207	4206	1	20.0
4560	Guscio	4148	4149	4208	4207	1	20.0
4561	Guscio	4149	4150	4209	4208	1	20.0
4562	Guscio	4150	4151	4210	4209	1	20.0
4563	Guscio	4151	4152	4211	4210	1	20.0
4564	Guscio	4152	4153	4212	4211	1	20.0
4565	Guscio	4153	4154	4213	4212	1	20.0
4566	Guscio	4154	4155	4214	4213	1	20.0
4567	Guscio	4155	4156	4215	4214	1	20.0
4568	Guscio	4156	4157	4216	4215	1	20.0
4569	Guscio	4157	4158	4217	4216	1	20.0
4570	Guscio	4158	4159	4218	4217	1	20.0
4571	Guscio	4159	4160	4219	4218	1	20.0
4572	Guscio	4160	4161	4220	4219	1	20.0
4573	Guscio	4161	4162	4221	4220	1	20.0
4574	Guscio	4162	4163	4222	4221	1	20.0
4575	Guscio	4163	4164	4223	4222	1	20.0
4576	Guscio	4164	4165	4224	4223	1	20.0
4577	Guscio	4165	4166	4225	4224	1	20.0
4578	Guscio	4166	4167	4226	4225	1	20.0
4579	Guscio	4167	4168	4227	4226	1	20.0
4580	Guscio	4168	4169	4228	4227	1	20.0
4581	Guscio	4169	4170	4229	4228	1	20.0
4582	Guscio	4170	4171	4230	4229	1	20.0
4583	Guscio	4171	4172	4231	4230	1	20.0
4584	Guscio	4172	4173	4232	4231	1	20.0
4585	Guscio	4173	4174	4233	4232	1	20.0
4586	Guscio	4174	4175	4234	4233	1	20.0
4587	Guscio	4175	4176	4235	4234	1	20.0
4588	Guscio	4176	4177	4236	4235	1	20.0
4589	Guscio	4177	4178	4237	4236	1	20.0
4590	Guscio	4178	4179	4238	4237	1	20.0
4591	Guscio	4179	4180	4239	4238	1	20.0
4592	Guscio	4180	4181	4240	4239	1	20.0
4593	Guscio	4181	4182	4241	4240	1	20.0
4594	Guscio	4182	4183	4242	4241	1	20.0
4595	Guscio	4183	4184	4243	4242	1	20.0
4596	Guscio	4184	4185	4244	4243	1	20.0
4597	Guscio	4185	4186	4245	4244	1	20.0

4598	Guscio	4186	4187	4246	4245	1	20.0
4599	Guscio	4187	4188	4247	4246	1	20.0
4600	Guscio	4188	4189	4248	4247	1	20.0
4601	Guscio	4189	4190	4249	4248	1	20.0
4602	Guscio	4190	4191	4250	4249	1	20.0
4603	Guscio	4191	4192	4251	4250	1	20.0
4604	Guscio	4192	4193	4252	4251	1	20.0
4605	Setto	3860	3866	4377	4371	1	15.0
4606	Setto	3861	3871	4382	4372	1	15.0
4607	Setto	3862	3877	4388	4373	1	15.0
4608	Setto	3863	3883	4394	4374	1	15.0
4609	Setto	3864	3889	4400	4375	1	15.0
4610	Setto	3865	3894	4405	4376	1	15.0
4611	Setto	3866	3895	4406	4377	1	15.0
4612	Setto	3867	3896	4407	4378	1	15.0
4613	Setto	3868	3897	4408	4379	1	15.0
4614	Setto	3869	3898	4409	4380	1	15.0
4615	Setto	3870	3899	4410	4381	1	15.0
4616	Setto	3871	3900	4411	4382	1	15.0
4617	Setto	3872	3901	4412	4383	1	15.0
4618	Setto	3873	3902	4413	4384	1	15.0
4619	Setto	3874	3903	4414	4385	1	15.0
4620	Setto	3875	3904	4415	4386	1	15.0
4621	Setto	3876	3905	4416	4387	1	15.0
4622	Setto	3877	3906	4417	4388	1	15.0
4623	Setto	3878	3907	4418	4389	1	15.0
4624	Setto	3879	3908	4419	4390	1	15.0
4625	Setto	3880	3909	4420	4391	1	15.0
4626	Setto	3881	3910	4421	4392	1	15.0
4627	Setto	3882	3911	4422	4393	1	15.0
4628	Setto	3883	3912	4423	4394	1	15.0
4629	Setto	3884	3913	4424	4395	1	15.0
4630	Setto	3885	3914	4425	4396	1	15.0
4631	Setto	3886	3915	4426	4397	1	15.0
4632	Setto	3887	3916	4427	4398	1	15.0
4633	Setto	3888	3917	4428	4399	1	15.0
4634	Setto	3889	3918	4429	4400	1	15.0
4635	Setto	3890	3919	4430	4401	1	15.0
4636	Setto	3891	3920	4431	4402	1	15.0
4637	Setto	3892	3921	4432	4403	1	15.0
4638	Setto	3893	3922	4433	4404	1	15.0
4639	Setto	3894	3923	4434	4405	1	15.0
4640	Setto	3895	3924	4435	4406	1	15.0
4641	Setto	3896	3925	4436	4407	1	15.0
4642	Setto	3897	3926	4437	4408	1	15.0
4643	Setto	3898	3927	4438	4409	1	15.0
4644	Setto	3899	3928	4439	4410	1	15.0
4645	Setto	3900	3929	4440	4411	1	15.0
4646	Setto	3901	3930	4441	4412	1	15.0
4647	Setto	3902	3931	4442	4413	1	15.0
4648	Setto	3903	3932	4443	4414	1	15.0
4649	Setto	3904	3933	4444	4415	1	15.0
4650	Setto	3905	3934	4445	4416	1	15.0
4651	Setto	3906	3935	4446	4417	1	15.0
4652	Setto	3907	3936	4447	4418	1	15.0
4653	Setto	3908	3937	4448	4419	1	15.0
4654	Setto	3909	3938	4449	4420	1	15.0
4655	Setto	3910	3939	4450	4421	1	15.0
4656	Setto	3911	3940	4451	4422	1	15.0
4657	Setto	3912	3941	4452	4423	1	15.0
4658	Setto	3913	3942	4453	4424	1	15.0
4659	Setto	3914	3943	4454	4425	1	15.0
4660	Setto	3915	3944	4455	4426	1	15.0
4661	Setto	3916	3945	4456	4427	1	15.0
4662	Setto	3917	3946	4457	4428	1	15.0
4663	Setto	3918	3947	4458	4429	1	15.0
4664	Setto	3919	3948	4459	4430	1	15.0
4665	Setto	3920	3949	4460	4431	1	15.0
4666	Setto	3921	3950	4461	4432	1	15.0
4667	Setto	3922	3951	4462	4433	1	15.0
4668	Setto	3923	3952	4463	4434	1	15.0
4669	Setto	3924	3953	4464	4435	1	15.0
4670	Setto	3925	3954	4465	4436	1	15.0
4671	Setto	3926	3955	4466	4437	1	15.0
4672	Setto	3927	3956	4467	4438	1	15.0
4673	Setto	3928	3957	4468	4439	1	15.0
4674	Setto	3929	3958	4469	4440	1	15.0
4675	Setto	3930	3959	4470	4441	1	15.0
4676	Setto	3931	3960	4471	4442	1	15.0

4677	Setto	3932	3961	4472	4443	1	15.0
4678	Setto	3933	3962	4473	4444	1	15.0
4679	Setto	3934	3963	4474	4445	1	15.0
4680	Setto	3935	3964	4475	4446	1	15.0
4681	Setto	3936	3965	4476	4447	1	15.0
4682	Setto	3937	3966	4477	4448	1	15.0
4683	Setto	3938	3967	4478	4449	1	15.0
4684	Setto	3939	3968	4479	4450	1	15.0
4685	Setto	3940	3969	4480	4451	1	15.0
4686	Setto	3941	3970	4481	4452	1	15.0
4687	Setto	3942	3971	4482	4453	1	15.0
4688	Setto	3943	3972	4483	4454	1	15.0
4689	Setto	3944	3973	4484	4455	1	15.0
4690	Setto	3945	3974	4485	4456	1	15.0
4691	Setto	3946	3975	4486	4457	1	15.0
4692	Setto	3947	3976	4487	4458	1	15.0
4693	Setto	3948	3977	4488	4459	1	15.0
4694	Setto	3949	3978	4489	4460	1	15.0
4695	Setto	3950	3979	4490	4461	1	15.0
4696	Setto	3951	3980	4491	4462	1	15.0
4697	Setto	3952	3981	4492	4463	1	15.0
4698	Setto	3953	3982	4493	4464	1	15.0
4699	Setto	3954	3983	4494	4465	1	15.0
4700	Setto	3955	3984	4495	4466	1	15.0
4701	Setto	3956	3985	4496	4467	1	15.0
4702	Setto	3957	3986	4497	4468	1	15.0
4703	Setto	3958	3987	4498	4469	1	15.0
4704	Setto	3959	3988	4499	4470	1	15.0
4705	Setto	3960	3989	4500	4471	1	15.0
4706	Setto	3961	3990	4501	4472	1	15.0
4707	Setto	3962	3991	4502	4473	1	15.0
4708	Setto	3963	3992	4503	4474	1	15.0
4709	Setto	3964	3993	4504	4475	1	15.0
4710	Setto	3965	3994	4505	4476	1	15.0
4711	Setto	3966	3995	4506	4477	1	15.0
4712	Setto	3967	3996	4507	4478	1	15.0
4713	Setto	3968	3997	4508	4479	1	15.0
4714	Setto	3969	3998	4509	4480	1	15.0
4715	Setto	3970	3999	4510	4481	1	15.0
4716	Setto	3971	4000	4511	4482	1	15.0
4717	Setto	3972	4001	4512	4483	1	15.0
4718	Setto	3973	4002	4513	4484	1	15.0
4719	Setto	3974	4003	4514	4485	1	15.0
4720	Setto	3975	4004	4515	4486	1	15.0
4721	Setto	3976	4005	4516	4487	1	15.0
4722	Setto	3977	4006	4517	4488	1	15.0
4723	Setto	3978	4007	4518	4489	1	15.0
4724	Setto	3979	4008	4519	4490	1	15.0
4725	Setto	3980	4009	4520	4491	1	15.0
4726	Setto	3981	4010	4521	4492	1	15.0
4727	Setto	3982	4011	4522	4493	1	15.0
4728	Setto	3983	4013	4524	4494	1	15.0
4729	Setto	3984	4015	4526	4495	1	15.0
4730	Setto	3985	4017	4528	4496	1	15.0
4731	Setto	3986	4019	4530	4497	1	15.0
4732	Setto	3987	4021	4532	4498	1	15.0
4733	Setto	3988	4023	4534	4499	1	15.0
4734	Setto	3989	4025	4536	4500	1	15.0
4735	Setto	3990	4027	4538	4501	1	15.0
4736	Setto	3991	4029	4540	4502	1	15.0
4737	Setto	3992	4031	4542	4503	1	15.0
4738	Setto	3993	4033	4544	4504	1	15.0
4739	Setto	3994	4035	4546	4505	1	15.0
4740	Setto	3995	4037	4548	4506	1	15.0
4741	Setto	3996	4039	4550	4507	1	15.0
4742	Setto	3997	4041	4552	4508	1	15.0
4743	Setto	3998	4043	4554	4509	1	15.0
4744	Setto	3999	4045	4556	4510	1	15.0
4745	Setto	4000	4047	4558	4511	1	15.0
4746	Setto	4001	4049	4560	4512	1	15.0
4747	Setto	4002	4051	4562	4513	1	15.0
4748	Setto	4003	4053	4564	4514	1	15.0
4749	Setto	4004	4055	4566	4515	1	15.0
4750	Setto	4005	4057	4568	4516	1	15.0
4751	Setto	4006	4059	4570	4517	1	15.0
4752	Setto	4007	4061	4572	4518	1	15.0
4753	Setto	4008	4063	4574	4519	1	15.0
4754	Setto	4009	4065	4576	4520	1	15.0
4755	Setto	4010	4067	4578	4521	1	15.0

4756	Setto	4522	4523	4012	4011	1	15.0
4757	Setto	4523	4524	4013	4012	1	15.0
4758	Setto	4524	4525	4014	4013	1	15.0
4759	Setto	4525	4526	4015	4014	1	15.0
4760	Setto	4526	4527	4016	4015	1	15.0
4761	Setto	4527	4528	4017	4016	1	15.0
4762	Setto	4528	4529	4018	4017	1	15.0
4763	Setto	4529	4530	4019	4018	1	15.0
4764	Setto	4530	4531	4020	4019	1	15.0
4765	Setto	4531	4532	4021	4020	1	15.0
4766	Setto	4532	4533	4022	4021	1	15.0
4767	Setto	4533	4534	4023	4022	1	15.0
4768	Setto	4534	4535	4024	4023	1	15.0
4769	Setto	4535	4536	4025	4024	1	15.0
4770	Setto	4536	4537	4026	4025	1	15.0
4771	Setto	4537	4538	4027	4026	1	15.0
4772	Setto	4538	4539	4028	4027	1	15.0
4773	Setto	4539	4540	4029	4028	1	15.0
4774	Setto	4540	4541	4030	4029	1	15.0
4775	Setto	4541	4542	4031	4030	1	15.0
4776	Setto	4542	4543	4032	4031	1	15.0
4777	Setto	4543	4544	4033	4032	1	15.0
4778	Setto	4544	4545	4034	4033	1	15.0
4779	Setto	4545	4546	4035	4034	1	15.0
4780	Setto	4546	4547	4036	4035	1	15.0
4781	Setto	4547	4548	4037	4036	1	15.0
4782	Setto	4548	4549	4038	4037	1	15.0
4783	Setto	4549	4550	4039	4038	1	15.0
4784	Setto	4550	4551	4040	4039	1	15.0
4785	Setto	4551	4552	4041	4040	1	15.0
4786	Setto	4552	4553	4042	4041	1	15.0
4787	Setto	4553	4554	4043	4042	1	15.0
4788	Setto	4554	4555	4044	4043	1	15.0
4789	Setto	4555	4556	4045	4044	1	15.0
4790	Setto	4556	4557	4046	4045	1	15.0
4791	Setto	4557	4558	4047	4046	1	15.0
4792	Setto	4558	4559	4048	4047	1	15.0
4793	Setto	4559	4560	4049	4048	1	15.0
4794	Setto	4560	4561	4050	4049	1	15.0
4795	Setto	4561	4562	4051	4050	1	15.0
4796	Setto	4562	4563	4052	4051	1	15.0
4797	Setto	4563	4564	4053	4052	1	15.0
4798	Setto	4564	4565	4054	4053	1	15.0
4799	Setto	4565	4566	4055	4054	1	15.0
4800	Setto	4566	4567	4056	4055	1	15.0
4801	Setto	4567	4568	4057	4056	1	15.0
4802	Setto	4568	4569	4058	4057	1	15.0
4803	Setto	4569	4570	4059	4058	1	15.0
4804	Setto	4570	4571	4060	4059	1	15.0
4805	Setto	4571	4572	4061	4060	1	15.0
4806	Setto	4572	4573	4062	4061	1	15.0
4807	Setto	4573	4574	4063	4062	1	15.0
4808	Setto	4574	4575	4064	4063	1	15.0
4809	Setto	4575	4576	4065	4064	1	15.0
4810	Setto	4576	4577	4066	4065	1	15.0
4811	Setto	4577	4578	4067	4066	1	15.0
4812	Guscio	4194	4195	4254	4253	1	20.0
4813	Guscio	4195	4196	4255	4254	1	20.0
4814	Guscio	4196	4197	4256	4255	1	20.0
4815	Guscio	4197	4198	4257	4256	1	20.0
4816	Guscio	4198	4199	4258	4257	1	20.0
4817	Guscio	4199	4200	4259	4258	1	20.0
4818	Guscio	4200	4201	4260	4259	1	20.0
4819	Guscio	4201	4202	4261	4260	1	20.0
4820	Guscio	4202	4203	4262	4261	1	20.0
4821	Guscio	4203	4204	4263	4262	1	20.0
4822	Guscio	4204	4205	4264	4263	1	20.0
4823	Guscio	4205	4206	4265	4264	1	20.0
4824	Guscio	4206	4207	4266	4265	1	20.0
4825	Guscio	4207	4208	4267	4266	1	20.0
4826	Guscio	4208	4209	4268	4267	1	20.0
4827	Guscio	4209	4210	4269	4268	1	20.0
4828	Guscio	4210	4211	4270	4269	1	20.0
4829	Guscio	4211	4212	4271	4270	1	20.0
4830	Guscio	4212	4213	4272	4271	1	20.0
4831	Guscio	4213	4214	4273	4272	1	20.0
4832	Guscio	4214	4215	4274	4273	1	20.0
4833	Guscio	4215	4216	4275	4274	1	20.0
4834	Guscio	4216	4217	4276	4275	1	20.0

4835	Guscio	4217	4218	4277	4276	1	20.0
4836	Guscio	4218	4219	4278	4277	1	20.0
4837	Guscio	4219	4220	4279	4278	1	20.0
4838	Guscio	4220	4221	4280	4279	1	20.0
4839	Guscio	4221	4222	4281	4280	1	20.0
4840	Guscio	4222	4223	4282	4281	1	20.0
4841	Guscio	4223	4224	4283	4282	1	20.0
4842	Guscio	4224	4225	4284	4283	1	20.0
4843	Guscio	4225	4226	4285	4284	1	20.0
4844	Guscio	4226	4227	4286	4285	1	20.0
4845	Guscio	4227	4228	4287	4286	1	20.0
4846	Guscio	4228	4229	4288	4287	1	20.0
4847	Guscio	4229	4230	4289	4288	1	20.0
4848	Guscio	4230	4231	4290	4289	1	20.0
4849	Guscio	4231	4232	4291	4290	1	20.0
4850	Guscio	4232	4233	4292	4291	1	20.0
4851	Guscio	4233	4234	4293	4292	1	20.0
4852	Guscio	4234	4235	4294	4293	1	20.0
4853	Guscio	4235	4236	4295	4294	1	20.0
4854	Guscio	4236	4237	4296	4295	1	20.0
4855	Guscio	4237	4238	4297	4296	1	20.0
4856	Guscio	4238	4239	4298	4297	1	20.0
4857	Guscio	4239	4240	4299	4298	1	20.0
4858	Guscio	4240	4241	4300	4299	1	20.0
4859	Guscio	4241	4242	4301	4300	1	20.0
4860	Guscio	4242	4243	4302	4301	1	20.0
4861	Guscio	4243	4244	4303	4302	1	20.0
4862	Guscio	4244	4245	4304	4303	1	20.0
4863	Guscio	4245	4246	4305	4304	1	20.0
4864	Guscio	4246	4247	4306	4305	1	20.0
4865	Guscio	4247	4248	4307	4306	1	20.0
4866	Guscio	4248	4249	4308	4307	1	20.0
4867	Guscio	4249	4250	4309	4308	1	20.0
4868	Guscio	4250	4251	4310	4309	1	20.0
4869	Guscio	4251	4252	4311	4310	1	20.0
4870	Guscio	4253	4254	4313	4312	1	20.0
4871	Guscio	4254	4255	4314	4313	1	20.0
4872	Guscio	4255	4256	4315	4314	1	20.0
4873	Guscio	4256	4257	4316	4315	1	20.0
4874	Guscio	4257	4258	4317	4316	1	20.0
4875	Guscio	4258	4259	4318	4317	1	20.0
4876	Guscio	4259	4260	4319	4318	1	20.0
4877	Guscio	4260	4261	4320	4319	1	20.0
4878	Guscio	4261	4262	4321	4320	1	20.0
4879	Guscio	4262	4263	4322	4321	1	20.0
4880	Guscio	4263	4264	4323	4322	1	20.0
4881	Guscio	4264	4265	4324	4323	1	20.0
4882	Guscio	4265	4266	4325	4324	1	20.0
4883	Guscio	4266	4267	4326	4325	1	20.0
4884	Guscio	4267	4268	4327	4326	1	20.0
4885	Guscio	4268	4269	4328	4327	1	20.0
4886	Guscio	4269	4270	4329	4328	1	20.0
4887	Guscio	4270	4271	4330	4329	1	20.0
4888	Guscio	4271	4272	4331	4330	1	20.0
4889	Guscio	4272	4273	4332	4331	1	20.0
4890	Guscio	4273	4274	4333	4332	1	20.0
4891	Guscio	4274	4275	4334	4333	1	20.0
4892	Guscio	4275	4276	4335	4334	1	20.0
4893	Guscio	4276	4277	4336	4335	1	20.0
4894	Guscio	4277	4278	4337	4336	1	20.0
4895	Guscio	4278	4279	4338	4337	1	20.0
4896	Guscio	4279	4280	4339	4338	1	20.0
4897	Guscio	4280	4281	4340	4339	1	20.0
4898	Guscio	4281	4282	4341	4340	1	20.0
4899	Guscio	4282	4283	4342	4341	1	20.0
4900	Guscio	4283	4284	4343	4342	1	20.0
4901	Guscio	4284	4285	4344	4343	1	20.0
4902	Guscio	4285	4286	4345	4344	1	20.0
4903	Guscio	4286	4287	4346	4345	1	20.0
4904	Guscio	4287	4288	4347	4346	1	20.0
4905	Guscio	4288	4289	4348	4347	1	20.0
4906	Guscio	4289	4290	4349	4348	1	20.0
4907	Guscio	4290	4291	4350	4349	1	20.0
4908	Guscio	4291	4292	4351	4350	1	20.0
4909	Guscio	4292	4293	4352	4351	1	20.0
4910	Guscio	4293	4294	4353	4352	1	20.0
4911	Guscio	4294	4295	4354	4353	1	20.0
4912	Guscio	4295	4296	4355	4354	1	20.0
4913	Guscio	4296	4297	4356	4355	1	20.0

4914	Guscio	4297	4298	4357	4356	1	20.0
4915	Guscio	4298	4299	4358	4357	1	20.0
4916	Guscio	4299	4300	4359	4358	1	20.0
4917	Guscio	4300	4301	4360	4359	1	20.0
4918	Guscio	4301	4302	4361	4360	1	20.0
4919	Guscio	4302	4303	4362	4361	1	20.0
4920	Guscio	4303	4304	4363	4362	1	20.0
4921	Guscio	4304	4305	4364	4363	1	20.0
4922	Guscio	4305	4306	4365	4364	1	20.0
4923	Guscio	4306	4307	4366	4365	1	20.0
4924	Guscio	4307	4308	4367	4366	1	20.0
4925	Guscio	4308	4309	4368	4367	1	20.0
4926	Guscio	4309	4310	4369	4368	1	20.0
4927	Guscio	4310	4311	4370	4369	1	20.0
4928	Guscio	4312	4313	4580	4579	1	20.0
4929	Guscio	4313	4314	4581	4580	1	20.0
4930	Guscio	4314	4315	4582	4581	1	20.0
4931	Guscio	4315	4316	4583	4582	1	20.0
4932	Guscio	4316	4317	4584	4583	1	20.0
4933	Guscio	4317	4318	4585	4584	1	20.0
4934	Guscio	4318	4319	4586	4585	1	20.0
4935	Guscio	4319	4320	4587	4586	1	20.0
4936	Guscio	4320	4321	4588	4587	1	20.0
4937	Guscio	4321	4322	4589	4588	1	20.0
4938	Guscio	4322	4323	4590	4589	1	20.0
4939	Guscio	4323	4324	4591	4590	1	20.0
4940	Guscio	4324	4325	4592	4591	1	20.0
4941	Guscio	4325	4326	4593	4592	1	20.0
4942	Guscio	4326	4327	4594	4593	1	20.0
4943	Guscio	4327	4328	4595	4594	1	20.0
4944	Guscio	4328	4329	4596	4595	1	20.0
4945	Guscio	4329	4330	4597	4596	1	20.0
4946	Guscio	4330	4331	4598	4597	1	20.0
4947	Guscio	4331	4332	4599	4598	1	20.0
4948	Guscio	4332	4333	4600	4599	1	20.0
4949	Guscio	4333	4334	4601	4600	1	20.0
4950	Guscio	4334	4335	4602	4601	1	20.0
4951	Guscio	4335	4336	4603	4602	1	20.0
4952	Guscio	4336	4337	4604	4603	1	20.0
4953	Guscio	4337	4338	4605	4604	1	20.0
4954	Guscio	4338	4339	4606	4605	1	20.0
4955	Guscio	4339	4340	4607	4606	1	20.0
4956	Guscio	4340	4341	4608	4607	1	20.0
4957	Guscio	4341	4342	4609	4608	1	20.0
4958	Guscio	4342	4343	4610	4609	1	20.0
4959	Guscio	4343	4344	4611	4610	1	20.0
4960	Guscio	4344	4345	4612	4611	1	20.0
4961	Guscio	4345	4346	4613	4612	1	20.0
4962	Guscio	4346	4347	4614	4613	1	20.0
4963	Guscio	4347	4348	4615	4614	1	20.0
4964	Guscio	4348	4349	4616	4615	1	20.0
4965	Guscio	4349	4350	4617	4616	1	20.0
4966	Guscio	4350	4351	4618	4617	1	20.0
4967	Guscio	4351	4352	4619	4618	1	20.0
4968	Guscio	4352	4353	4620	4619	1	20.0
4969	Guscio	4353	4354	4621	4620	1	20.0
4970	Guscio	4354	4355	4622	4621	1	20.0
4971	Guscio	4355	4356	4623	4622	1	20.0
4972	Guscio	4356	4357	4624	4623	1	20.0
4973	Guscio	4357	4358	4625	4624	1	20.0
4974	Guscio	4358	4359	4626	4625	1	20.0
4975	Guscio	4359	4360	4627	4626	1	20.0
4976	Guscio	4360	4361	4628	4627	1	20.0
4977	Guscio	4361	4362	4629	4628	1	20.0
4978	Guscio	4362	4363	4630	4629	1	20.0
4979	Guscio	4363	4364	4631	4630	1	20.0
4980	Guscio	4364	4365	4632	4631	1	20.0
4981	Guscio	4365	4366	4633	4632	1	20.0
4982	Guscio	4366	4367	4634	4633	1	20.0
4983	Guscio	4367	4368	4635	4634	1	20.0
4984	Guscio	4368	4369	4636	4635	1	20.0
4985	Guscio	4369	4370	4637	4636	1	20.0
4986	Setto	4371	4377	4639	4580	1	15.0
4987	Setto	4372	4382	4649	4590	1	15.0
4988	Setto	4373	4388	4661	4602	1	15.0
4989	Setto	4374	4394	4673	4614	1	15.0
4990	Setto	4375	4400	4685	4626	1	15.0
4991	Setto	4376	4405	4695	4636	1	15.0
4992	Guscio	4579	4580	4639	4638	1	20.0

4993	Guscio	4580	4581	4640	4639	1	20.0
4994	Guscio	4581	4582	4641	4640	1	20.0
4995	Guscio	4582	4583	4642	4641	1	20.0
4996	Guscio	4583	4584	4643	4642	1	20.0
4997	Guscio	4584	4585	4644	4643	1	20.0
4998	Guscio	4585	4586	4645	4644	1	20.0
4999	Guscio	4586	4587	4646	4645	1	20.0
5000	Guscio	4587	4588	4647	4646	1	20.0
5001	Guscio	4588	4589	4648	4647	1	20.0
5002	Guscio	4589	4590	4649	4648	1	20.0
5003	Guscio	4590	4591	4650	4649	1	20.0
5004	Guscio	4591	4592	4651	4650	1	20.0
5005	Guscio	4592	4593	4652	4651	1	20.0
5006	Guscio	4593	4594	4653	4652	1	20.0
5007	Guscio	4594	4595	4654	4653	1	20.0
5008	Guscio	4595	4596	4655	4654	1	20.0
5009	Guscio	4596	4597	4656	4655	1	20.0
5010	Guscio	4597	4598	4657	4656	1	20.0
5011	Guscio	4598	4599	4658	4657	1	20.0
5012	Guscio	4599	4600	4659	4658	1	20.0
5013	Guscio	4600	4601	4660	4659	1	20.0
5014	Guscio	4601	4602	4661	4660	1	20.0
5015	Guscio	4602	4603	4662	4661	1	20.0
5016	Guscio	4603	4604	4663	4662	1	20.0
5017	Guscio	4604	4605	4664	4663	1	20.0
5018	Guscio	4605	4606	4665	4664	1	20.0
5019	Guscio	4606	4607	4666	4665	1	20.0
5020	Guscio	4607	4608	4667	4666	1	20.0
5021	Guscio	4608	4609	4668	4667	1	20.0
5022	Guscio	4609	4610	4669	4668	1	20.0
5023	Guscio	4610	4611	4670	4669	1	20.0
5024	Guscio	4611	4612	4671	4670	1	20.0
5025	Guscio	4612	4613	4672	4671	1	20.0
5026	Guscio	4613	4614	4673	4672	1	20.0
5027	Guscio	4614	4615	4674	4673	1	20.0
5028	Guscio	4615	4616	4675	4674	1	20.0
5029	Guscio	4616	4617	4676	4675	1	20.0
5030	Guscio	4617	4618	4677	4676	1	20.0
5031	Guscio	4618	4619	4678	4677	1	20.0
5032	Guscio	4619	4620	4679	4678	1	20.0
5033	Guscio	4620	4621	4680	4679	1	20.0
5034	Guscio	4621	4622	4681	4680	1	20.0
5035	Guscio	4622	4623	4682	4681	1	20.0
5036	Guscio	4623	4624	4683	4682	1	20.0
5037	Guscio	4624	4625	4684	4683	1	20.0
5038	Guscio	4625	4626	4685	4684	1	20.0
5039	Guscio	4626	4627	4686	4685	1	20.0
5040	Guscio	4627	4628	4687	4686	1	20.0
5041	Guscio	4628	4629	4688	4687	1	20.0
5042	Guscio	4629	4630	4689	4688	1	20.0
5043	Guscio	4630	4631	4690	4689	1	20.0
5044	Guscio	4631	4632	4691	4690	1	20.0
5045	Guscio	4632	4633	4692	4691	1	20.0
5046	Guscio	4633	4634	4693	4692	1	20.0
5047	Guscio	4634	4635	4694	4693	1	20.0
5048	Guscio	4635	4636	4695	4694	1	20.0
5049	Guscio	4636	4637	4696	4695	1	20.0
5050	Guscio	4638	4639	4698	4697	1	20.0
5051	Guscio	4639	4640	4699	4698	1	20.0
5052	Guscio	4640	4641	4700	4699	1	20.0
5053	Guscio	4641	4642	4701	4700	1	20.0
5054	Guscio	4642	4643	4702	4701	1	20.0
5055	Guscio	4643	4644	4703	4702	1	20.0
5056	Guscio	4644	4645	4704	4703	1	20.0
5057	Guscio	4645	4646	4705	4704	1	20.0
5058	Guscio	4646	4647	4706	4705	1	20.0
5059	Guscio	4647	4648	4707	4706	1	20.0
5060	Guscio	4648	4649	4708	4707	1	20.0
5061	Guscio	4649	4650	4709	4708	1	20.0
5062	Guscio	4650	4651	4710	4709	1	20.0
5063	Guscio	4651	4652	4711	4710	1	20.0
5064	Guscio	4652	4653	4712	4711	1	20.0
5065	Guscio	4653	4654	4713	4712	1	20.0
5066	Guscio	4654	4655	4714	4713	1	20.0
5067	Guscio	4655	4656	4715	4714	1	20.0
5068	Guscio	4656	4657	4716	4715	1	20.0
5069	Guscio	4657	4658	4717	4716	1	20.0
5070	Guscio	4658	4659	4718	4717	1	20.0
5071	Guscio	4659	4660	4719	4718	1	20.0

5072	Guscio	4660	4661	4720	4719	1	20.0
5073	Guscio	4661	4662	4721	4720	1	20.0
5074	Guscio	4662	4663	4722	4721	1	20.0
5075	Guscio	4663	4664	4723	4722	1	20.0
5076	Guscio	4664	4665	4724	4723	1	20.0
5077	Guscio	4665	4666	4725	4724	1	20.0
5078	Guscio	4666	4667	4726	4725	1	20.0
5079	Guscio	4667	4668	4727	4726	1	20.0
5080	Guscio	4668	4669	4728	4727	1	20.0
5081	Guscio	4669	4670	4729	4728	1	20.0
5082	Guscio	4670	4671	4730	4729	1	20.0
5083	Guscio	4671	4672	4731	4730	1	20.0
5084	Guscio	4672	4673	4732	4731	1	20.0
5085	Guscio	4673	4674	4733	4732	1	20.0
5086	Guscio	4674	4675	4734	4733	1	20.0
5087	Guscio	4675	4676	4735	4734	1	20.0
5088	Guscio	4676	4677	4736	4735	1	20.0
5089	Guscio	4677	4678	4737	4736	1	20.0
5090	Guscio	4678	4679	4738	4737	1	20.0
5091	Guscio	4679	4680	4739	4738	1	20.0
5092	Guscio	4680	4681	4740	4739	1	20.0
5093	Guscio	4681	4682	4741	4740	1	20.0
5094	Guscio	4682	4683	4742	4741	1	20.0
5095	Guscio	4683	4684	4743	4742	1	20.0
5096	Guscio	4684	4685	4744	4743	1	20.0
5097	Guscio	4685	4686	4745	4744	1	20.0
5098	Guscio	4686	4687	4746	4745	1	20.0
5099	Guscio	4687	4688	4747	4746	1	20.0
5100	Guscio	4688	4689	4748	4747	1	20.0
5101	Guscio	4689	4690	4749	4748	1	20.0
5102	Guscio	4690	4691	4750	4749	1	20.0
5103	Guscio	4691	4692	4751	4750	1	20.0
5104	Guscio	4692	4693	4752	4751	1	20.0
5105	Guscio	4693	4694	4753	4752	1	20.0
5106	Guscio	4694	4695	4754	4753	1	20.0
5107	Guscio	4695	4696	4755	4754	1	20.0
5108	Setto	4406	4435	4757	4698	1	15.0
5109	Setto	4407	4436	4759	4700	1	15.0
5110	Setto	4408	4437	4761	4702	1	15.0
5111	Setto	4409	4438	4763	4704	1	15.0
5112	Setto	4410	4439	4765	4706	1	15.0
5113	Setto	4411	4440	4767	4708	1	15.0
5114	Setto	4412	4441	4769	4710	1	15.0
5115	Setto	4413	4442	4771	4712	1	15.0
5116	Setto	4414	4443	4773	4714	1	15.0
5117	Setto	4415	4444	4775	4716	1	15.0
5118	Setto	4416	4445	4777	4718	1	15.0
5119	Setto	4417	4446	4779	4720	1	15.0
5120	Setto	4418	4447	4781	4722	1	15.0
5121	Setto	4419	4448	4783	4724	1	15.0
5122	Setto	4420	4449	4785	4726	1	15.0
5123	Setto	4421	4450	4787	4728	1	15.0
5124	Setto	4422	4451	4789	4730	1	15.0
5125	Setto	4423	4452	4791	4732	1	15.0
5126	Setto	4424	4453	4793	4734	1	15.0
5127	Setto	4425	4454	4795	4736	1	15.0
5128	Setto	4426	4455	4797	4738	1	15.0
5129	Setto	4427	4456	4799	4740	1	15.0
5130	Setto	4428	4457	4801	4742	1	15.0
5131	Setto	4429	4458	4803	4744	1	15.0
5132	Setto	4430	4459	4805	4746	1	15.0
5133	Setto	4431	4460	4807	4748	1	15.0
5134	Setto	4432	4461	4809	4750	1	15.0
5135	Setto	4433	4462	4811	4752	1	15.0
5136	Setto	4434	4463	4813	4754	1	15.0
5137	Setto	4435	4464	4816	4757	1	15.0
5138	Setto	4436	4465	4818	4759	1	15.0
5139	Setto	4437	4466	4820	4761	1	15.0
5140	Setto	4438	4467	4822	4763	1	15.0
5141	Setto	4439	4468	4824	4765	1	15.0
5142	Setto	4440	4469	4826	4767	1	15.0
5143	Setto	4441	4470	4828	4769	1	15.0
5144	Setto	4442	4471	4830	4771	1	15.0
5145	Setto	4443	4472	4832	4773	1	15.0
5146	Setto	4444	4473	4834	4775	1	15.0
5147	Setto	4445	4474	4836	4777	1	15.0
5148	Setto	4446	4475	4838	4779	1	15.0
5149	Setto	4447	4476	4840	4781	1	15.0
5150	Setto	4448	4477	4842	4783	1	15.0

5151	Setto	4449	4478	4844	4785	1	15.0
5152	Setto	4450	4479	4846	4787	1	15.0
5153	Setto	4451	4480	4848	4789	1	15.0
5154	Setto	4452	4481	4850	4791	1	15.0
5155	Setto	4453	4482	4852	4793	1	15.0
5156	Setto	4454	4483	4854	4795	1	15.0
5157	Setto	4455	4484	4856	4797	1	15.0
5158	Setto	4456	4485	4858	4799	1	15.0
5159	Setto	4457	4486	4860	4801	1	15.0
5160	Setto	4458	4487	4862	4803	1	15.0
5161	Setto	4459	4488	4864	4805	1	15.0
5162	Setto	4460	4489	4866	4807	1	15.0
5163	Setto	4461	4490	4868	4809	1	15.0
5164	Setto	4462	4491	4870	4811	1	15.0
5165	Setto	4463	4492	4872	4813	1	15.0
5166	Guscio	4697	4698	4757	4756	1	20.0
5167	Guscio	4698	4699	4758	4757	1	20.0
5168	Guscio	4699	4700	4759	4758	1	20.0
5169	Guscio	4700	4701	4760	4759	1	20.0
5170	Guscio	4701	4702	4761	4760	1	20.0
5171	Guscio	4702	4703	4762	4761	1	20.0
5172	Guscio	4703	4704	4763	4762	1	20.0
5173	Guscio	4704	4705	4764	4763	1	20.0
5174	Guscio	4705	4706	4765	4764	1	20.0
5175	Guscio	4706	4707	4766	4765	1	20.0
5176	Guscio	4707	4708	4767	4766	1	20.0
5177	Guscio	4708	4709	4768	4767	1	20.0
5178	Guscio	4709	4710	4769	4768	1	20.0
5179	Guscio	4710	4711	4770	4769	1	20.0
5180	Guscio	4711	4712	4771	4770	1	20.0
5181	Guscio	4712	4713	4772	4771	1	20.0
5182	Guscio	4713	4714	4773	4772	1	20.0
5183	Guscio	4714	4715	4774	4773	1	20.0
5184	Guscio	4715	4716	4775	4774	1	20.0
5185	Guscio	4716	4717	4776	4775	1	20.0
5186	Guscio	4717	4718	4777	4776	1	20.0
5187	Guscio	4718	4719	4778	4777	1	20.0
5188	Guscio	4719	4720	4779	4778	1	20.0
5189	Guscio	4720	4721	4780	4779	1	20.0
5190	Guscio	4721	4722	4781	4780	1	20.0
5191	Guscio	4722	4723	4782	4781	1	20.0
5192	Guscio	4723	4724	4783	4782	1	20.0
5193	Guscio	4724	4725	4784	4783	1	20.0
5194	Guscio	4725	4726	4785	4784	1	20.0
5195	Guscio	4726	4727	4786	4785	1	20.0
5196	Guscio	4727	4728	4787	4786	1	20.0
5197	Guscio	4728	4729	4788	4787	1	20.0
5198	Guscio	4729	4730	4789	4788	1	20.0
5199	Guscio	4730	4731	4790	4789	1	20.0
5200	Guscio	4731	4732	4791	4790	1	20.0
5201	Guscio	4732	4733	4792	4791	1	20.0
5202	Guscio	4733	4734	4793	4792	1	20.0
5203	Guscio	4734	4735	4794	4793	1	20.0
5204	Guscio	4735	4736	4795	4794	1	20.0
5205	Guscio	4736	4737	4796	4795	1	20.0
5206	Guscio	4737	4738	4797	4796	1	20.0
5207	Guscio	4738	4739	4798	4797	1	20.0
5208	Guscio	4739	4740	4799	4798	1	20.0
5209	Guscio	4740	4741	4800	4799	1	20.0
5210	Guscio	4741	4742	4801	4800	1	20.0
5211	Guscio	4742	4743	4802	4801	1	20.0
5212	Guscio	4743	4744	4803	4802	1	20.0
5213	Guscio	4744	4745	4804	4803	1	20.0
5214	Guscio	4745	4746	4805	4804	1	20.0
5215	Guscio	4746	4747	4806	4805	1	20.0
5216	Guscio	4747	4748	4807	4806	1	20.0
5217	Guscio	4748	4749	4808	4807	1	20.0
5218	Guscio	4749	4750	4809	4808	1	20.0
5219	Guscio	4750	4751	4810	4809	1	20.0
5220	Guscio	4751	4752	4811	4810	1	20.0
5221	Guscio	4752	4753	4812	4811	1	20.0
5222	Guscio	4753	4754	4813	4812	1	20.0
5223	Guscio	4754	4755	4814	4813	1	20.0
5224	Setto	4464	4493	4875	4816	1	15.0
5225	Setto	4465	4494	4877	4818	1	15.0
5226	Setto	4466	4495	4879	4820	1	15.0
5227	Setto	4467	4496	4881	4822	1	15.0
5228	Setto	4468	4497	4883	4824	1	15.0
5229	Setto	4469	4498	4885	4826	1	15.0

5230	Setto	4470	4499	4887	4828	1	15.0
5231	Setto	4471	4500	4889	4830	1	15.0
5232	Setto	4472	4501	4891	4832	1	15.0
5233	Setto	4473	4502	4893	4834	1	15.0
5234	Setto	4474	4503	4895	4836	1	15.0
5235	Setto	4475	4504	4897	4838	1	15.0
5236	Setto	4476	4505	4899	4840	1	15.0
5237	Setto	4477	4506	4901	4842	1	15.0
5238	Setto	4478	4507	4903	4844	1	15.0
5239	Setto	4479	4508	4905	4846	1	15.0
5240	Setto	4480	4509	4907	4848	1	15.0
5241	Setto	4481	4510	4909	4850	1	15.0
5242	Setto	4482	4511	4911	4852	1	15.0
5243	Setto	4483	4512	4913	4854	1	15.0
5244	Setto	4484	4513	4915	4856	1	15.0
5245	Setto	4485	4514	4917	4858	1	15.0
5246	Setto	4486	4515	4919	4860	1	15.0
5247	Setto	4487	4516	4921	4862	1	15.0
5248	Setto	4488	4517	4923	4864	1	15.0
5249	Setto	4489	4518	4925	4866	1	15.0
5250	Setto	4490	4519	4927	4868	1	15.0
5251	Setto	4491	4520	4929	4870	1	15.0
5252	Setto	4492	4521	4931	4872	1	15.0
5253	Setto	4493	4522	4934	4875	1	15.0
5254	Setto	4494	4524	4936	4877	1	15.0
5255	Setto	4495	4526	4938	4879	1	15.0
5256	Setto	4496	4528	4940	4881	1	15.0
5257	Setto	4497	4530	4942	4883	1	15.0
5258	Setto	4498	4532	4944	4885	1	15.0
5259	Setto	4499	4534	4946	4887	1	15.0
5260	Setto	4500	4536	4948	4889	1	15.0
5261	Setto	4501	4538	4950	4891	1	15.0
5262	Setto	4502	4540	4952	4893	1	15.0
5263	Setto	4503	4542	4954	4895	1	15.0
5264	Setto	4504	4544	4956	4897	1	15.0
5265	Setto	4505	4546	4958	4899	1	15.0
5266	Setto	4506	4548	4960	4901	1	15.0
5267	Setto	4507	4550	4962	4903	1	15.0
5268	Setto	4508	4552	4964	4905	1	15.0
5269	Setto	4509	4554	4966	4907	1	15.0
5270	Setto	4510	4556	4968	4909	1	15.0
5271	Setto	4511	4558	4970	4911	1	15.0
5272	Setto	4512	4560	4972	4913	1	15.0
5273	Setto	4513	4562	4974	4915	1	15.0
5274	Setto	4514	4564	4976	4917	1	15.0
5275	Setto	4515	4566	4978	4919	1	15.0
5276	Setto	4516	4568	4980	4921	1	15.0
5277	Setto	4517	4570	4982	4923	1	15.0
5278	Setto	4518	4572	4984	4925	1	15.0
5279	Setto	4519	4574	4986	4927	1	15.0
5280	Setto	4520	4576	4988	4929	1	15.0
5281	Setto	4521	4578	4990	4931	1	15.0
5282	Setto	4934	4935	4523	4522	1	15.0
5283	Setto	4935	4936	4524	4523	1	15.0
5284	Setto	4936	4937	4525	4524	1	15.0
5285	Setto	4937	4938	4526	4525	1	15.0
5286	Setto	4938	4939	4527	4526	1	15.0
5287	Setto	4939	4940	4528	4527	1	15.0
5288	Setto	4940	4941	4529	4528	1	15.0
5289	Setto	4941	4942	4530	4529	1	15.0
5290	Setto	4942	4943	4531	4530	1	15.0
5291	Setto	4943	4944	4532	4531	1	15.0
5292	Setto	4944	4945	4533	4532	1	15.0
5293	Setto	4945	4946	4534	4533	1	15.0
5294	Setto	4946	4947	4535	4534	1	15.0
5295	Setto	4947	4948	4536	4535	1	15.0
5296	Setto	4948	4949	4537	4536	1	15.0
5297	Setto	4949	4950	4538	4537	1	15.0
5298	Setto	4950	4951	4539	4538	1	15.0
5299	Setto	4951	4952	4540	4539	1	15.0
5300	Setto	4952	4953	4541	4540	1	15.0
5301	Setto	4953	4954	4542	4541	1	15.0
5302	Setto	4954	4955	4543	4542	1	15.0
5303	Setto	4955	4956	4544	4543	1	15.0
5304	Setto	4956	4957	4545	4544	1	15.0
5305	Setto	4957	4958	4546	4545	1	15.0
5306	Setto	4958	4959	4547	4546	1	15.0
5307	Setto	4959	4960	4548	4547	1	15.0
5308	Setto	4960	4961	4549	4548	1	15.0

5309	Setto	4961	4962	4550	4549	1	15.0
5310	Setto	4962	4963	4551	4550	1	15.0
5311	Setto	4963	4964	4552	4551	1	15.0
5312	Setto	4964	4965	4553	4552	1	15.0
5313	Setto	4965	4966	4554	4553	1	15.0
5314	Setto	4966	4967	4555	4554	1	15.0
5315	Setto	4967	4968	4556	4555	1	15.0
5316	Setto	4968	4969	4557	4556	1	15.0
5317	Setto	4969	4970	4558	4557	1	15.0
5318	Setto	4970	4971	4559	4558	1	15.0
5319	Setto	4971	4972	4560	4559	1	15.0
5320	Setto	4972	4973	4561	4560	1	15.0
5321	Setto	4973	4974	4562	4561	1	15.0
5322	Setto	4974	4975	4563	4562	1	15.0
5323	Setto	4975	4976	4564	4563	1	15.0
5324	Setto	4976	4977	4565	4564	1	15.0
5325	Setto	4977	4978	4566	4565	1	15.0
5326	Setto	4978	4979	4567	4566	1	15.0
5327	Setto	4979	4980	4568	4567	1	15.0
5328	Setto	4980	4981	4569	4568	1	15.0
5329	Setto	4981	4982	4570	4569	1	15.0
5330	Setto	4982	4983	4571	4570	1	15.0
5331	Setto	4983	4984	4572	4571	1	15.0
5332	Setto	4984	4985	4573	4572	1	15.0
5333	Setto	4985	4986	4574	4573	1	15.0
5334	Setto	4986	4987	4575	4574	1	15.0
5335	Setto	4987	4988	4576	4575	1	15.0
5336	Setto	4988	4989	4577	4576	1	15.0
5337	Setto	4989	4990	4578	4577	1	15.0
5338	Guscio	4756	4757	4816	4815	1	20.0
5339	Guscio	4757	4758	4817	4816	1	20.0
5340	Guscio	4758	4759	4818	4817	1	20.0
5341	Guscio	4759	4760	4819	4818	1	20.0
5342	Guscio	4760	4761	4820	4819	1	20.0
5343	Guscio	4761	4762	4821	4820	1	20.0
5344	Guscio	4762	4763	4822	4821	1	20.0
5345	Guscio	4763	4764	4823	4822	1	20.0
5346	Guscio	4764	4765	4824	4823	1	20.0
5347	Guscio	4765	4766	4825	4824	1	20.0
5348	Guscio	4766	4767	4826	4825	1	20.0
5349	Guscio	4767	4768	4827	4826	1	20.0
5350	Guscio	4768	4769	4828	4827	1	20.0
5351	Guscio	4769	4770	4829	4828	1	20.0
5352	Guscio	4770	4771	4830	4829	1	20.0
5353	Guscio	4771	4772	4831	4830	1	20.0
5354	Guscio	4772	4773	4832	4831	1	20.0
5355	Guscio	4773	4774	4833	4832	1	20.0
5356	Guscio	4774	4775	4834	4833	1	20.0
5357	Guscio	4775	4776	4835	4834	1	20.0
5358	Guscio	4776	4777	4836	4835	1	20.0
5359	Guscio	4777	4778	4837	4836	1	20.0
5360	Guscio	4778	4779	4838	4837	1	20.0
5361	Guscio	4779	4780	4839	4838	1	20.0
5362	Guscio	4780	4781	4840	4839	1	20.0
5363	Guscio	4781	4782	4841	4840	1	20.0
5364	Guscio	4782	4783	4842	4841	1	20.0
5365	Guscio	4783	4784	4843	4842	1	20.0
5366	Guscio	4784	4785	4844	4843	1	20.0
5367	Guscio	4785	4786	4845	4844	1	20.0
5368	Guscio	4786	4787	4846	4845	1	20.0
5369	Guscio	4787	4788	4847	4846	1	20.0
5370	Guscio	4788	4789	4848	4847	1	20.0
5371	Guscio	4789	4790	4849	4848	1	20.0
5372	Guscio	4790	4791	4850	4849	1	20.0
5373	Guscio	4791	4792	4851	4850	1	20.0
5374	Guscio	4792	4793	4852	4851	1	20.0
5375	Guscio	4793	4794	4853	4852	1	20.0
5376	Guscio	4794	4795	4854	4853	1	20.0
5377	Guscio	4795	4796	4855	4854	1	20.0
5378	Guscio	4796	4797	4856	4855	1	20.0
5379	Guscio	4797	4798	4857	4856	1	20.0
5380	Guscio	4798	4799	4858	4857	1	20.0
5381	Guscio	4799	4800	4859	4858	1	20.0
5382	Guscio	4800	4801	4860	4859	1	20.0
5383	Guscio	4801	4802	4861	4860	1	20.0
5384	Guscio	4802	4803	4862	4861	1	20.0
5385	Guscio	4803	4804	4863	4862	1	20.0
5386	Guscio	4804	4805	4864	4863	1	20.0
5387	Guscio	4805	4806	4865	4864	1	20.0

5388	Guscio	4806	4807	4866	4865	1	20.0
5389	Guscio	4807	4808	4867	4866	1	20.0
5390	Guscio	4808	4809	4868	4867	1	20.0
5391	Guscio	4809	4810	4869	4868	1	20.0
5392	Guscio	4810	4811	4870	4869	1	20.0
5393	Guscio	4811	4812	4871	4870	1	20.0
5394	Guscio	4812	4813	4872	4871	1	20.0
5395	Guscio	4813	4814	4873	4872	1	20.0
5396	Guscio	4815	4816	4875	4874	1	20.0
5397	Guscio	4816	4817	4876	4875	1	20.0
5398	Guscio	4817	4818	4877	4876	1	20.0
5399	Guscio	4818	4819	4878	4877	1	20.0
5400	Guscio	4819	4820	4879	4878	1	20.0
5401	Guscio	4820	4821	4880	4879	1	20.0
5402	Guscio	4821	4822	4881	4880	1	20.0
5403	Guscio	4822	4823	4882	4881	1	20.0
5404	Guscio	4823	4824	4883	4882	1	20.0
5405	Guscio	4824	4825	4884	4883	1	20.0
5406	Guscio	4825	4826	4885	4884	1	20.0
5407	Guscio	4826	4827	4886	4885	1	20.0
5408	Guscio	4827	4828	4887	4886	1	20.0
5409	Guscio	4828	4829	4888	4887	1	20.0
5410	Guscio	4829	4830	4889	4888	1	20.0
5411	Guscio	4830	4831	4890	4889	1	20.0
5412	Guscio	4831	4832	4891	4890	1	20.0
5413	Guscio	4832	4833	4892	4891	1	20.0
5414	Guscio	4833	4834	4893	4892	1	20.0
5415	Guscio	4834	4835	4894	4893	1	20.0
5416	Guscio	4835	4836	4895	4894	1	20.0
5417	Guscio	4836	4837	4896	4895	1	20.0
5418	Guscio	4837	4838	4897	4896	1	20.0
5419	Guscio	4838	4839	4898	4897	1	20.0
5420	Guscio	4839	4840	4899	4898	1	20.0
5421	Guscio	4840	4841	4900	4899	1	20.0
5422	Guscio	4841	4842	4901	4900	1	20.0
5423	Guscio	4842	4843	4902	4901	1	20.0
5424	Guscio	4843	4844	4903	4902	1	20.0
5425	Guscio	4844	4845	4904	4903	1	20.0
5426	Guscio	4845	4846	4905	4904	1	20.0
5427	Guscio	4846	4847	4906	4905	1	20.0
5428	Guscio	4847	4848	4907	4906	1	20.0
5429	Guscio	4848	4849	4908	4907	1	20.0
5430	Guscio	4849	4850	4909	4908	1	20.0
5431	Guscio	4850	4851	4910	4909	1	20.0
5432	Guscio	4851	4852	4911	4910	1	20.0
5433	Guscio	4852	4853	4912	4911	1	20.0
5434	Guscio	4853	4854	4913	4912	1	20.0
5435	Guscio	4854	4855	4914	4913	1	20.0
5436	Guscio	4855	4856	4915	4914	1	20.0
5437	Guscio	4856	4857	4916	4915	1	20.0
5438	Guscio	4857	4858	4917	4916	1	20.0
5439	Guscio	4858	4859	4918	4917	1	20.0
5440	Guscio	4859	4860	4919	4918	1	20.0
5441	Guscio	4860	4861	4920	4919	1	20.0
5442	Guscio	4861	4862	4921	4920	1	20.0
5443	Guscio	4862	4863	4922	4921	1	20.0
5444	Guscio	4863	4864	4923	4922	1	20.0
5445	Guscio	4864	4865	4924	4923	1	20.0
5446	Guscio	4865	4866	4925	4924	1	20.0
5447	Guscio	4866	4867	4926	4925	1	20.0
5448	Guscio	4867	4868	4927	4926	1	20.0
5449	Guscio	4868	4869	4928	4927	1	20.0
5450	Guscio	4869	4870	4929	4928	1	20.0
5451	Guscio	4870	4871	4930	4929	1	20.0
5452	Guscio	4871	4872	4931	4930	1	20.0
5453	Guscio	4872	4873	4932	4931	1	20.0
5454	Guscio	4874	4875	4934	4933	1	20.0
5455	Guscio	4875	4876	4935	4934	1	20.0
5456	Guscio	4876	4877	4936	4935	1	20.0
5457	Guscio	4877	4878	4937	4936	1	20.0
5458	Guscio	4878	4879	4938	4937	1	20.0
5459	Guscio	4879	4880	4939	4938	1	20.0
5460	Guscio	4880	4881	4940	4939	1	20.0
5461	Guscio	4881	4882	4941	4940	1	20.0
5462	Guscio	4882	4883	4942	4941	1	20.0
5463	Guscio	4883	4884	4943	4942	1	20.0
5464	Guscio	4884	4885	4944	4943	1	20.0
5465	Guscio	4885	4886	4945	4944	1	20.0
5466	Guscio	4886	4887	4946	4945	1	20.0

5467	Guscio	4887	4888	4947	4946	1	20.0
5468	Guscio	4888	4889	4948	4947	1	20.0
5469	Guscio	4889	4890	4949	4948	1	20.0
5470	Guscio	4890	4891	4950	4949	1	20.0
5471	Guscio	4891	4892	4951	4950	1	20.0
5472	Guscio	4892	4893	4952	4951	1	20.0
5473	Guscio	4893	4894	4953	4952	1	20.0
5474	Guscio	4894	4895	4954	4953	1	20.0
5475	Guscio	4895	4896	4955	4954	1	20.0
5476	Guscio	4896	4897	4956	4955	1	20.0
5477	Guscio	4897	4898	4957	4956	1	20.0
5478	Guscio	4898	4899	4958	4957	1	20.0
5479	Guscio	4899	4900	4959	4958	1	20.0
5480	Guscio	4900	4901	4960	4959	1	20.0
5481	Guscio	4901	4902	4961	4960	1	20.0
5482	Guscio	4902	4903	4962	4961	1	20.0
5483	Guscio	4903	4904	4963	4962	1	20.0
5484	Guscio	4904	4905	4964	4963	1	20.0
5485	Guscio	4905	4906	4965	4964	1	20.0
5486	Guscio	4906	4907	4966	4965	1	20.0
5487	Guscio	4907	4908	4967	4966	1	20.0
5488	Guscio	4908	4909	4968	4967	1	20.0
5489	Guscio	4909	4910	4969	4968	1	20.0
5490	Guscio	4910	4911	4970	4969	1	20.0
5491	Guscio	4911	4912	4971	4970	1	20.0
5492	Guscio	4912	4913	4972	4971	1	20.0
5493	Guscio	4913	4914	4973	4972	1	20.0
5494	Guscio	4914	4915	4974	4973	1	20.0
5495	Guscio	4915	4916	4975	4974	1	20.0
5496	Guscio	4916	4917	4976	4975	1	20.0
5497	Guscio	4917	4918	4977	4976	1	20.0
5498	Guscio	4918	4919	4978	4977	1	20.0
5499	Guscio	4919	4920	4979	4978	1	20.0
5500	Guscio	4920	4921	4980	4979	1	20.0
5501	Guscio	4921	4922	4981	4980	1	20.0
5502	Guscio	4922	4923	4982	4981	1	20.0
5503	Guscio	4923	4924	4983	4982	1	20.0
5504	Guscio	4924	4925	4984	4983	1	20.0
5505	Guscio	4925	4926	4985	4984	1	20.0
5506	Guscio	4926	4927	4986	4985	1	20.0
5507	Guscio	4927	4928	4987	4986	1	20.0
5508	Guscio	4928	4929	4988	4987	1	20.0
5509	Guscio	4929	4930	4989	4988	1	20.0
5510	Guscio	4930	4931	4990	4989	1	20.0
5511	Guscio	4931	4932	4991	4990	1	20.0
5512	Guscio	4933	4934	4993	4992	1	20.0
5513	Guscio	4934	4935	4994	4993	1	20.0
5514	Guscio	4935	4936	4995	4994	1	20.0
5515	Guscio	4936	4937	4996	4995	1	20.0
5516	Guscio	4937	4938	4997	4996	1	20.0
5517	Guscio	4938	4939	4998	4997	1	20.0
5518	Guscio	4939	4940	4999	4998	1	20.0
5519	Guscio	4940	4941	5000	4999	1	20.0
5520	Guscio	4941	4942	5001	5000	1	20.0
5521	Guscio	4942	4943	5002	5001	1	20.0
5522	Guscio	4943	4944	5003	5002	1	20.0
5523	Guscio	4944	4945	5004	5003	1	20.0
5524	Guscio	4945	4946	5005	5004	1	20.0
5525	Guscio	4946	4947	5006	5005	1	20.0
5526	Guscio	4947	4948	5007	5006	1	20.0
5527	Guscio	4948	4949	5008	5007	1	20.0
5528	Guscio	4949	4950	5009	5008	1	20.0
5529	Guscio	4950	4951	5010	5009	1	20.0
5530	Guscio	4951	4952	5011	5010	1	20.0
5531	Guscio	4952	4953	5012	5011	1	20.0
5532	Guscio	4953	4954	5013	5012	1	20.0
5533	Guscio	4954	4955	5014	5013	1	20.0
5534	Guscio	4955	4956	5015	5014	1	20.0
5535	Guscio	4956	4957	5016	5015	1	20.0
5536	Guscio	4957	4958	5017	5016	1	20.0
5537	Guscio	4958	4959	5018	5017	1	20.0
5538	Guscio	4959	4960	5019	5018	1	20.0
5539	Guscio	4960	4961	5020	5019	1	20.0
5540	Guscio	4961	4962	5021	5020	1	20.0
5541	Guscio	4962	4963	5022	5021	1	20.0
5542	Guscio	4963	4964	5023	5022	1	20.0
5543	Guscio	4964	4965	5024	5023	1	20.0
5544	Guscio	4965	4966	5025	5024	1	20.0
5545	Guscio	4966	4967	5026	5025	1	20.0

5546	Guscio	4967	4968	5027	5026	1	20.0
5547	Guscio	4968	4969	5028	5027	1	20.0
5548	Guscio	4969	4970	5029	5028	1	20.0
5549	Guscio	4970	4971	5030	5029	1	20.0
5550	Guscio	4971	4972	5031	5030	1	20.0
5551	Guscio	4972	4973	5032	5031	1	20.0
5552	Guscio	4973	4974	5033	5032	1	20.0
5553	Guscio	4974	4975	5034	5033	1	20.0
5554	Guscio	4975	4976	5035	5034	1	20.0
5555	Guscio	4976	4977	5036	5035	1	20.0
5556	Guscio	4977	4978	5037	5036	1	20.0
5557	Guscio	4978	4979	5038	5037	1	20.0
5558	Guscio	4979	4980	5039	5038	1	20.0
5559	Guscio	4980	4981	5040	5039	1	20.0
5560	Guscio	4981	4982	5041	5040	1	20.0
5561	Guscio	4982	4983	5042	5041	1	20.0
5562	Guscio	4983	4984	5043	5042	1	20.0
5563	Guscio	4984	4985	5044	5043	1	20.0
5564	Guscio	4985	4986	5045	5044	1	20.0
5565	Guscio	4986	4987	5046	5045	1	20.0
5566	Guscio	4987	4988	5047	5046	1	20.0
5567	Guscio	4988	4989	5048	5047	1	20.0
5568	Guscio	4989	4990	5049	5048	1	20.0
5569	Guscio	4990	4991	5050	5049	1	20.0

OUTPUT

AZIONE SISMICA

L'azione sismica sulle costruzioni è valutata a partire dalla "pericolosità sismica di base", in condizioni ideali di sito di riferimento rigido con superficie topografica orizzontale.
Allo stato attuale, la pericolosità sismica su reticolo di riferimento nell'intervallo di riferimento è fornita dai dati pubblicati sul sito http://esse1.mi.ingv.it/. Per punti non coincidenti con il reticolo di riferimento e periodi di ritorno non contemplati direttamente si opera come indicato nell' allegato alle NTC (rispettivamente media pesata e interpolazione).

L' azione sismica viene definita in relazione ad un periodo di riferimento Vr che si ricava, per ciascun tipo di costruzione, moltiplicandone la vita nominale per il coefficiente d'uso (vedi tabella Parametri della struttura). Fissato il periodo di riferimento Vr e la probabilità di superamento Pver associata a ciascuno degli stati limite considerati, si ottiene il periodo di ritorno Tr e i relativi parametri di pericolosità sismica (vedi tabella successiva):
ag: accelerazione orizzontale massima del terreno;
Fo: valore massimo del fattore di amplificazione dello spettro in accelerazione orizzontale;
T*c: periodo di inizio del tratto a velocità costante dello spettro in accelerazione orizzontale;

Parametri della struttura					
Classe d'uso	Vita Vn [anni]	Coeff. Uso	Periodo Vr [anni]	Tipo di suolo	Categoria topografica
III	50.0	1.5	75.0	C	T1

Individuati su reticolo di riferimento i parametri di pericolosità sismica si valutano i parametri spettrali riportati in tabella:
S è il coefficiente che tiene conto della categoria di sottosuolo e delle condizioni topografiche mediante la relazione seguente S = Ss*St (3.2.3)
Fo è il fattore che quantifica l'amplificazione spettrale massima, su sito di riferimento rigido orizzontale
Fv è il fattore che quantifica l'amplificazione spettrale massima verticale, in termini di accelerazione orizzontale massima del terreno ag su sito di riferimento rigido orizzontale
Tb è il periodo corrispondente all'inizio del tratto dello spettro ad accelerazione costante.
Tc è il periodo corrispondente all'inizio del tratto dello spettro a velocità costante.
Td è il periodo corrispondente all'inizio del tratto dello spettro a spostamento costante.

Id nodo	Longitudine	Latitudine	Distanza
			Km
Loc.	12.168	42.108	
27619	12.143	42.077	4.027
27620	12.210	42.078	4.841
27398	12.209	42.128	4.032
27397	12.142	42.127	2.954

SL	Pver	Tr	ag	Fo	T*c
		Anni	g		sec
SLO	81.0	45.0	0.036	2.660	0.250
SLD	63.0	75.0	0.041	2.670	0.270
SLV	10.0	712.0	0.073	2.910	0.340
SLC	5.0	1462.0	0.085	2.970	0.370

SL	ag	S	Fo	Fv	Tb	Tc	Td
	g				sec	sec	sec
SLO	0.036	1.500	2.660	0.679	0.138	0.415	1.743
SLD	0.042	1.500	2.670	0.734	0.146	0.437	1.766
SLV	0.073	1.500	2.910	1.064	0.170	0.510	1.893
SLC	0.086	1.500	2.970	1.172	0.180	0.539	1.942

RISULTATI ANALISI SISMICHE

Il programma consente l'analisi di diverse configurazioni sismiche.

Sono previsti, infatti, i seguenti casi di carico:

9. Esk caso di carico sismico con analisi statica equivalente
10. Edk caso di carico sismico con analisi dinamica

Ciascun caso di carico è caratterizzato da un angolo di ingresso e da una configurazione di masse determinante la forza sismica complessiva (si rimanda al capitolo relativo ai casi di carico per chiarimenti inerenti questo aspetto).

Nella colonna Note, in funzione della norma in uso sono riportati i parametri fondamentali che caratterizzano l' azione sismica: in particolare possono essere presenti i seguenti valori:

Angolo di ingresso	Angolo di ingresso dell'azione sismica orizzontale
Fattore di importanza	Fattore di importanza dell'edificio, in base alla categoria di appartenenza
Zona sismica	Zona sismica
Accelerazione ag	Accelerazione orizzontale massima sul suolo
Categoria suolo	Categoria di profilo stratigrafico del suolo di fondazione
Fattore q	Fattore di struttura/di comportamento. Dipendente dalla tipologia strutturale
Fattore di sito S	Fattore dipendente dalla stratigrafia e dal profilo topografico
Classe di duttilità CD	Classe di duttilità della struttura – "A" duttilità alta, "B" duttilità bassa
Fattore riduz. SLD	Fattore di riduzione dello spettro elastico per lo stato limite di danno
Periodo proprio T1	Periodo proprio di vibrazione della struttura
Coefficiente Lambda	Coefficiente dipendente dal periodo proprio T1 e dal numero di piani della struttura
Ordinata spettro Sd(T1)	Valore delle ordinate dello spettro di progetto per lo stato limite ultimo, componente orizzontale (verticale Svd)
Ordinata spettro Se(T1)	Valore delle ordinate dello spettro elastico ridotta del fattore SLD per lo stato limite di danno, componente orizzontale (verticale Sve)
Ordinata spettro S (Tb-Tc)	Valore dell' ordinata dello spettro in uso nel tratto costante
numero di modi considerati	Numero di modi di vibrare della struttura considerati nell'analisi dinamica

Per ciascun caso di carico sismico viene riportato l'insieme di dati sotto riportati (le masse sono espresse in unità di forza):

a) **analisi sismica statica equivalente**:
- quota, posizione del centro di applicazione e azione orizzontale risultante, posizione del baricentro delle rigidezze, rapporto r/Ls (per strutture a nucleo), indici di regolarità e/r secondo EC8 4.2.3.2
- azione sismica complessiva

b) **analisi sismica dinamica con spettro di risposta**:
- quota, posizione del centro di massa e massa risultante, posizione del baricentro delle rigidezze, rapporto r/Ls (per strutture a nucleo) **,** indici di regolarità e/r secondo EC8 4.2.3.2
- frequenza, periodo, accelerazione spettrale, massa eccitata nelle tre direzioni globali per tutti i modi
- massa complessiva ed aliquota di massa complessiva eccitata.

Per ciascuna combinazione sismica definita SLD o SLO viene riportato il livello di deformazione etaT (dr) degli elementi strutturali verticali. Per semplicità di consultazione il livello è espresso anche in unità 1000*etaT/h da confrontare direttamente con i valori forniti nella norma (es. 5 per edifici con tamponamenti collegati rigidamente alla struttura, 10.0 per edifici con tamponamenti collegati elasticamente, 3 per edifici in muratura ordinaria, 4 per edifici in muratura armata).

CDC	Tipo	Sigla Id	Note
9	Edk	CDC=Ed (dinamico SLO) alfa=0.0 (ecc. +)	
			categoria suolo: C
			fattore di sito S = 1.500
			ordinata spettro (tratto Tb-Tc) = 0.143 g
			angolo di ingresso:0.0
			eccentricità aggiuntiva: positiva
			periodo proprio T1: 0.053 sec.
			numero di modi considerati: 9
			combinaz. modale: CQC

Quota	M Sismica x g	Pos. GX	Pos. GY	E agg. X-X	E agg. Y-Y	Pos. KX	Pos. KY	(r/Ls)^2	rapp. ex/rx	rapp. ey/ry
cm	kN	cm	cm	cm	cm	cm	cm			
463.01	24.91	1323.70	550.00	0.0	-1.06e-05	0.0	0.0	0.0	0.0	0.0
460.00	83.99	1322.44	520.00	0.0	-3.63e-06	0.0	0.0	0.0	0.0	0.0
454.89	90.86	1322.50	469.00	0.0	-3.63e-06	0.0	0.0	0.0	0.0	0.0
449.79	89.45	1322.50	418.00	0.0	-3.63e-06	0.0	0.0	0.0	0.0	0.0
444.68	88.03	1322.50	367.00	0.0	-3.63e-06	0.0	0.0	0.0	0.0	0.0
439.58	85.81	1322.50	316.00	0.0	-3.63e-06	0.0	0.0	0.0	0.0	0.0
434.47	46.48	1322.50	265.00	0.0	-3.63e-06	0.0	0.0	0.0	0.0	0.0
433.97	46.48	1322.50	260.00	0.0	-3.63e-06	0.0	0.0	0.0	0.0	0.0
432.50	83.72	1322.50	442.80	0.0	-13.00	1322.50	519.99	0.031	0.0	0.590

Quota	M Sismica x g	Pos. GX	Pos. GY	E agg. X-X	E agg. Y-Y	Pos. KX	Pos. KY	(r/Ls)^2	rapp. ex/rx	rapp. ey/ry
429.00	84.64	1322.50	208.99	0.0	-2.27e-05	0.0	0.0	0.0	0.0	0.0
424.03	84.64	1322.50	157.98	0.0	-2.27e-05	0.0	0.0	0.0	0.0	0.0
419.06	85.44	1322.50	106.97	0.0	-2.28e-05	0.0	0.0	0.0	0.0	0.0
414.00	75.20	1322.50	55.00	0.0	0.0	1322.50	55.00	1.392	0.0	0.0
410.59	29.04	1322.50	20.00	0.0	-1.50e-05	0.0	0.0	0.0	0.0	0.0
409.00	6.29	1322.50	55.00	0.0	0.0	0.0	0.0	0.0	0.0	0.0
405.00	101.24	1313.06	423.57	0.0	-13.00	1255.48	519.99	0.029	0.075	0.766
399.00	10.39	1322.50	55.00	0.0	0.0	0.0	0.0	0.0	0.0	0.0
389.00	16.89	1322.50	55.00	0.0	0.0	0.0	0.0	0.0	0.0	0.0
379.00	19.49	1322.50	55.00	0.0	0.0	0.0	0.0	0.0	0.0	0.0
377.50	511.52	1320.63	398.94	0.0	-13.00	1322.50	519.99	0.031	0.002	0.925
369.00	37.69	1322.50	55.00	0.0	0.0	1322.50	55.00	1.459	0.0	0.0
347.50	112.16	1322.50	424.66	0.0	-13.00	1322.50	519.99	0.031	0.0	0.728
317.50	109.58	1304.42	424.21	0.0	-13.00	1291.20	519.99	0.030	0.017	0.749
287.50	514.04	1318.55	399.20	0.0	-13.00	1279.89	519.99	0.025	0.051	1.026
257.50	111.01	1322.03	424.72	0.0	-13.00	1280.36	519.99	0.025	0.056	0.809
227.50	112.16	1322.50	424.66	0.0	-13.00	1280.36	519.99	0.025	0.057	0.810
197.50	517.77	1322.50	399.47	0.0	-13.00	1280.36	519.99	0.025	0.057	1.024
167.50	112.16	1322.50	424.66	0.0	-13.00	1280.36	519.99	0.025	0.057	0.810
137.50	112.16	1322.50	424.66	0.0	-13.00	1280.36	519.99	0.025	0.057	0.810
107.50	528.68	1322.50	399.99	0.0	-13.00	1280.36	519.99	0.025	0.057	1.019
71.67	133.97	1322.50	424.66	0.0	-13.00	1322.50	519.99	0.022	0.0	0.867
35.83	133.97	1322.50	424.66	0.0	-13.00	1322.50	519.99	0.022	0.0	0.867
1.00e-03	6.85	1577.00	392.50	0.0	-7.65	0.0	0.0	0.0	0.0	0.0
Risulta	4206.73									

Modo	Frequenza	Periodo	Acc. Spettrale	M efficace X x g	%	M efficace Y x g	%	M efficace Z x g	%	Energia	Energia x v
	Hz	sec	g	kN		kN		kN			
1	3.038	0.329	0.143	1.14e-03	2.70e-05	2805.29	66.7	362.80	8.6	0.0	0.0
2	4.735	0.211	0.143	811.01	19.3	7.53e-03	1.79e-04	9.05e-04	2.15e-05	0.0	0.0
3	6.699	0.149	0.143	3.54e-03	8.41e-05	198.24	4.7	2976.76	70.8	0.0	0.0
4	6.957	0.144	0.143	71.61	1.7	4.22	0.1	40.08	1.0	0.0	0.0
5	6.965	0.144	0.143	4.17	9.90e-02	82.53	2.0	823.50	19.6	0.0	0.0
6	13.239	0.076	0.102	6.55e-04	1.56e-05	0.57	1.34e-02	1.26	3.00e-02	0.0	0.0
7	18.744	0.053	0.088	3208.20	76.2	7.25e-04	1.72e-05	3.30e-05	0.0	0.0	0.0
8	22.561	0.044	0.082	2.54e-03	6.03e-05	295.14	7.0	1.00	2.37e-02	0.0	0.0
9	40.578	0.025	0.070	6.18e-05	1.47e-06	771.44	18.3	0.47	1.12e-02	0.0	0.0
Risulta				4094.99		4157.43		4205.87			
In percentuale				97.24		98.83		99.98			

CDC	Tipo	Sigla Id	Note
10	Edk	CDC=Ed (dinamico SLO) alfa=0.0 (ecc. -)	
			categoria suolo: C
			fattore di sito S = 1.500
			ordinata spettro (tratto Tb-Tc) = 0.143 g
			angolo di ingresso:0.0
			eccentricità aggiuntiva: negativa
			periodo proprio T1: 0.054 sec.
			numero di modi considerati: 9
			combinaz. modale: CQC

Quota	M Sismica x g	Pos. GX	Pos. GY	E agg. X-X	E agg. Y-Y	Pos. KX	Pos. KY	(r/Ls)^2	rapp. ex/rx	rapp. ey/ry
cm	kN	cm	cm	cm	cm	cm	cm			
463.01	24.91	1323.70	550.00	0.0	1.06e-05	0.0	0.0	0.0	0.0	0.0
460.00	83.99	1322.44	520.00	0.0	3.63e-06	0.0	0.0	0.0	0.0	0.0
454.89	90.86	1322.50	469.00	0.0	3.63e-06	0.0	0.0	0.0	0.0	0.0
449.79	89.45	1322.50	418.00	0.0	3.63e-06	0.0	0.0	0.0	0.0	0.0
444.68	88.03	1322.50	367.00	0.0	3.63e-06	0.0	0.0	0.0	0.0	0.0
439.58	85.81	1322.50	316.00	0.0	3.63e-06	0.0	0.0	0.0	0.0	0.0
434.47	46.48	1322.50	265.00	0.0	3.63e-06	0.0	0.0	0.0	0.0	0.0
433.97	46.48	1322.50	260.00	0.0	3.63e-06	0.0	0.0	0.0	0.0	0.0
432.50	83.72	1322.50	442.80	0.0	13.00	1322.50	519.99	0.031	0.0	0.590
429.00	84.64	1322.50	208.99	0.0	2.27e-05	0.0	0.0	0.0	0.0	0.0
424.03	84.64	1322.50	157.98	0.0	2.27e-05	0.0	0.0	0.0	0.0	0.0
419.06	85.44	1322.50	106.97	0.0	2.28e-05	0.0	0.0	0.0	0.0	0.0
414.00	75.20	1322.50	55.00	0.0	0.0	1322.50	55.00	1.392	0.0	0.0
410.59	29.04	1322.50	20.00	0.0	1.50e-05	0.0	0.0	0.0	0.0	0.0
409.00	6.29	1322.50	55.00	0.0	0.0	0.0	0.0	0.0	0.0	0.0
405.00	101.24	1313.06	423.57	0.0	13.00	1255.48	519.99	0.029	0.075	0.766
399.00	10.39	1322.50	55.00	0.0	0.0	0.0	0.0	0.0	0.0	0.0
389.00	16.89	1322.50	55.00	0.0	0.0	0.0	0.0	0.0	0.0	0.0
379.00	19.49	1322.50	55.00	0.0	0.0	0.0	0.0	0.0	0.0	0.0

Quota	M Sismica x g	Pos. GX	Pos. GY	E agg. X-X	E agg. Y-Y	Pos. KX	Pos. KY	(r/Ls)^2	rapp. ex/rx	rapp. ey/ry
377.50	511.52	1320.63	398.94	0.0	13.00	1322.50	519.99	0.031	0.002	0.925
369.00	37.69	1322.50	55.00	0.0	0.0	1322.50	55.00	1.459	0.0	0.0
347.50	112.16	1322.50	424.66	0.0	13.00	1322.50	519.99	0.031	0.0	0.728
317.50	109.58	1304.42	424.21	0.0	13.00	1291.20	519.99	0.030	0.017	0.749
287.50	514.04	1318.55	399.20	0.0	13.00	1279.89	519.99	0.025	0.051	1.026
257.50	111.01	1322.03	424.72	0.0	13.00	1280.36	519.99	0.025	0.056	0.809
227.50	112.16	1322.50	424.66	0.0	13.00	1280.36	519.99	0.025	0.057	0.810
197.50	517.77	1322.50	399.47	0.0	13.00	1280.36	519.99	0.025	0.057	1.024
167.50	112.16	1322.50	424.66	0.0	13.00	1280.36	519.99	0.025	0.057	0.810
137.50	112.16	1322.50	424.66	0.0	13.00	1280.36	519.99	0.025	0.057	0.810
107.50	528.68	1322.50	399.99	0.0	13.00	1280.36	519.99	0.025	0.057	1.019
71.67	133.97	1322.50	424.66	0.0	13.00	1322.50	519.99	0.022	0.0	0.867
35.83	133.97	1322.50	424.66	0.0	13.00	1322.50	519.99	0.022	0.0	0.867
1.00e-03	6.85	1577.00	392.50	0.0	7.65	0.0	0.0	0.0	0.0	0.0
Risulta	4206.73									

Modo	Frequenza	Periodo	Acc. Spettrale	M efficace X x g	%	M efficace Y x g	%	M efficace Z x g	%	Energia	Energia x v
	Hz	sec	g	kN		kN		kN			
1	3.038	0.329	0.143	1.04e-03	2.46e-05	2805.29	66.7	362.80	8.6	0.0	0.0
2	4.761	0.210	0.143	768.68	18.3	7.45e-03	1.77e-04	9.97e-04	2.37e-05	0.0	0.0
3	6.699	0.149	0.143	4.90e-03	1.17e-04	198.23	4.7	2976.65	70.8	0.0	0.0
4	6.948	0.144	0.143	86.74	2.1	0.85	2.03e-02	7.61	0.2	0.0	0.0
5	6.965	0.144	0.143	1.14	2.72e-02	85.90	2.0	856.08	20.4	0.0	0.0
6	13.237	0.076	0.102	9.72e-04	2.31e-05	0.56	1.34e-02	1.27	3.01e-02	0.0	0.0
7	18.642	0.054	0.088	3232.06	76.8	6.35e-04	1.51e-05	3.17e-05	0.0	0.0	0.0
8	22.590	0.044	0.082	1.21e-03	2.87e-05	298.13	7.1	1.00	2.38e-02	0.0	0.0
9	40.787	0.025	0.070	3.68e-04	8.76e-06	772.17	18.4	0.47	1.11e-02	0.0	0.0
Risulta				4088.64		4161.15		4205.87			
In percentuale				97.19		98.92		99.98			

CDC	Tipo	Sigla Id	Note
11	Edk	CDC=Ed (dinamico SLO) alfa=90.00 (ecc. +)	
			categoria suolo: C
			fattore di sito S = 1.500
			ordinata spettro (tratto Tb-Tc) = 0.143 g
			angolo di ingresso:90.00
			eccentricità aggiuntiva: positiva
			periodo proprio T1: 0.331 sec.
			numero di modi considerati: 9
			combinaz. modale: CQC

Quota	M Sismica x g	Pos. GX	Pos. GY	E agg. X-X	E agg. Y-Y	Pos. KX	Pos. KY	(r/Ls)^2	rapp. ex/rx	rapp. ey/ry
cm	kN	cm	cm	cm	cm	cm	cm			
463.01	24.91	1323.70	550.00	130.35	0.0	0.0	0.0	0.0	0.0	0.0
460.00	83.99	1322.44	520.00	130.25	0.0	0.0	0.0	0.0	0.0	0.0
454.89	90.86	1322.50	469.00	130.25	0.0	0.0	0.0	0.0	0.0	0.0
449.79	89.45	1322.50	418.00	130.25	0.0	0.0	0.0	0.0	0.0	0.0
444.68	88.03	1322.50	367.00	130.25	0.0	0.0	0.0	0.0	0.0	0.0
439.58	85.81	1322.50	316.00	130.25	0.0	0.0	0.0	0.0	0.0	0.0
434.47	46.48	1322.50	265.00	130.25	0.0	0.0	0.0	0.0	0.0	0.0
433.97	46.48	1322.50	260.00	130.25	0.0	0.0	0.0	0.0	0.0	0.0
432.50	83.72	1322.50	442.80	127.25	0.0	1322.50	519.99	0.031	0.0	0.590
429.00	84.64	1322.50	208.99	130.25	0.0	0.0	0.0	0.0	0.0	0.0
424.03	84.64	1322.50	157.98	130.25	0.0	0.0	0.0	0.0	0.0	0.0
419.06	85.44	1322.50	106.97	130.25	0.0	0.0	0.0	0.0	0.0	0.0
414.00	75.20	1322.50	55.00	130.25	0.0	1322.50	55.00	1.392	0.0	0.0
410.59	29.04	1322.50	20.00	130.25	0.0	0.0	0.0	0.0	0.0	0.0
409.00	6.29	1322.50	55.00	104.50	0.0	0.0	0.0	0.0	0.0	0.0
405.00	101.24	1313.06	423.57	127.25	0.0	1255.48	519.99	0.029	0.075	0.766
399.00	10.39	1322.50	55.00	110.19	0.0	0.0	0.0	0.0	0.0	0.0
389.00	16.89	1322.50	55.00	115.88	0.0	0.0	0.0	0.0	0.0	0.0
379.00	19.49	1322.50	55.00	121.56	0.0	0.0	0.0	0.0	0.0	0.0
377.50	511.52	1320.63	398.94	127.25	0.0	1322.50	519.99	0.031	0.002	0.925
369.00	37.69	1322.50	55.00	127.25	0.0	1322.50	55.00	1.459	0.0	0.0
347.50	112.16	1322.50	424.66	127.25	0.0	1322.50	519.99	0.031	0.0	0.728
317.50	109.58	1304.42	424.21	127.25	0.0	1291.20	519.99	0.030	0.017	0.749
287.50	514.04	1318.55	399.20	127.25	0.0	1279.89	519.99	0.025	0.051	1.026
257.50	111.01	1322.03	424.72	127.25	0.0	1280.36	519.99	0.025	0.056	0.809
227.50	112.16	1322.50	424.66	127.25	0.0	1280.36	519.99	0.025	0.057	0.810
197.50	517.77	1322.50	399.47	127.25	0.0	1280.36	519.99	0.025	0.057	1.024
167.50	112.16	1322.50	424.66	127.25	0.0	1280.36	519.99	0.025	0.057	0.810
137.50	112.16	1322.50	424.66	127.25	0.0	1280.36	519.99	0.025	0.057	0.810

Quota	M Sismica x g	Pos. GX	Pos. GY	E agg. X-X	E agg. Y-Y	Pos. KX	Pos. KY	(r/Ls)^2	rapp. ex/rx	rapp. ey/ry
107.50	528.68	1322.50	399.99	127.25	0.0	1280.36	519.99	0.025	0.057	1.019
71.67	133.97	1322.50	424.66	127.25	0.0	1322.50	519.99	0.022	0.0	0.867
35.83	133.97	1322.50	424.66	127.25	0.0	1322.50	519.99	0.022	0.0	0.867
1.00e-03	6.85	1577.00	392.50	104.50	0.0	0.0	0.0	0.0	0.0	0.0
Risulta	4206.73									

Modo	Frequenza	Periodo	Acc. Spettrale	M efficace X x g	%	M efficace Y x g	%	M efficace Z x g	%	Energia	Energia x v
	Hz	sec	g	kN		kN		kN			
1	3.025	0.331	0.143	2.63	6.24e-02	2805.40	66.7	353.26	8.4	0.0	0.0
2	4.783	0.209	0.143	796.63	18.9	2.59	6.16e-02	26.06	0.6	0.0	0.0
3	6.617	0.151	0.143	19.56	0.5	99.29	2.4	1683.65	40.0	0.0	0.0
4	6.871	0.146	0.143	0.06	1.32e-03	181.66	4.3	2092.94	49.8	0.0	0.0
5	7.058	0.142	0.143	56.76	1.3	2.19	5.20e-02	42.48	1.0	0.0	0.0
6	9.248	0.108	0.124	0.16	3.71e-03	0.22	5.22e-03	5.26	0.1	0.0	0.0
7	11.580	0.086	0.109	2.12	5.03e-02	1.58	3.75e-02	0.74	1.77e-02	0.0	0.0
8	18.718	0.053	0.088	3208.65	76.3	2.00	4.76e-02	0.02	4.22e-04	0.0	0.0
9	27.686	0.036	0.077	6.13	0.1	799.23	19.0	1.33	3.17e-02	0.0	0.0
Risulta				4092.67		3894.15		4205.74			
In percentuale				97.29		92.57		99.98			

CDC	Tipo	Sigla Id	Note
12	Edk	CDC=Ed (dinamico SLO) alfa=90.00 (ecc. -)	
			categoria suolo: C
			fattore di sito S = 1.500
			ordinata spettro (tratto Tb-Tc) = 0.143 g
			angolo di ingresso:90.00
			eccentricità aggiuntiva: negativa
			periodo proprio T1: 0.331 sec.
			numero di modi considerati: 9
			combinaz. modale: CQC

Quota	M Sismica x g	Pos. GX	Pos. GY	E agg. X-X	E agg. Y-Y	Pos. KX	Pos. KY	(r/Ls)^2	rapp. ex/rx	rapp. ey/ry
cm	kN	cm	cm	cm	cm	cm	cm			
463.01	24.91	1323.70	550.00	-130.35	0.0	0.0	0.0	0.0	0.0	0.0
460.00	83.99	1322.44	520.00	-130.25	0.0	0.0	0.0	0.0	0.0	0.0
454.89	90.86	1322.50	469.00	-130.25	0.0	0.0	0.0	0.0	0.0	0.0
449.79	89.45	1322.50	418.00	-130.25	0.0	0.0	0.0	0.0	0.0	0.0
444.68	88.03	1322.50	367.00	-130.25	0.0	0.0	0.0	0.0	0.0	0.0
439.58	85.81	1322.50	316.00	-130.25	0.0	0.0	0.0	0.0	0.0	0.0
434.47	46.48	1322.50	265.00	-130.25	0.0	0.0	0.0	0.0	0.0	0.0
433.97	46.48	1322.50	260.00	-130.25	0.0	0.0	0.0	0.0	0.0	0.0
432.50	83.72	1322.50	442.80	-127.25	0.0	1322.50	519.99	0.031	0.0	0.590
429.00	84.64	1322.50	208.99	-130.25	0.0	0.0	0.0	0.0	0.0	0.0
424.03	84.64	1322.50	157.98	-130.25	0.0	0.0	0.0	0.0	0.0	0.0
419.06	85.44	1322.50	106.97	-130.25	0.0	0.0	0.0	0.0	0.0	0.0
414.00	75.20	1322.50	55.00	-130.25	0.0	1322.50	55.00	1.392	0.0	0.0
410.59	29.04	1322.50	20.00	-130.25	0.0	0.0	0.0	0.0	0.0	0.0
409.00	6.29	1322.50	55.00	-104.50	0.0	0.0	0.0	0.0	0.0	0.0
405.00	101.24	1313.06	423.57	-127.25	0.0	1255.48	519.99	0.029	0.075	0.766
399.00	10.39	1322.50	55.00	-110.19	0.0	0.0	0.0	0.0	0.0	0.0
389.00	16.89	1322.50	55.00	-115.88	0.0	0.0	0.0	0.0	0.0	0.0
379.00	19.49	1322.50	55.00	-121.56	0.0	0.0	0.0	0.0	0.0	0.0
377.50	511.52	1320.63	398.94	-127.25	0.0	1322.50	519.99	0.031	0.002	0.925
369.00	37.69	1322.50	55.00	-127.25	0.0	1322.50	55.00	1.459	0.0	0.0
347.50	112.16	1322.50	424.66	-127.25	0.0	1322.50	519.99	0.031	0.0	0.728
317.50	109.58	1304.42	424.21	-127.25	0.0	1291.20	519.99	0.030	0.017	0.749
287.50	514.04	1318.55	399.20	-127.25	0.0	1279.89	519.99	0.025	0.051	1.026
257.50	111.01	1322.03	424.72	-127.25	0.0	1280.36	519.99	0.025	0.056	0.809
227.50	112.16	1322.50	424.66	-127.25	0.0	1280.36	519.99	0.025	0.057	0.810
197.50	517.77	1322.50	399.47	-127.25	0.0	1280.36	519.99	0.025	0.057	1.024
167.50	112.16	1322.50	424.66	-127.25	0.0	1280.36	519.99	0.025	0.057	0.810
137.50	112.16	1322.50	424.66	-127.25	0.0	1280.36	519.99	0.025	0.057	0.810
107.50	528.68	1322.50	399.99	-127.25	0.0	1280.36	519.99	0.025	0.057	1.019
71.67	133.97	1322.50	424.66	-127.25	0.0	1322.50	519.99	0.022	0.0	0.867
35.83	133.97	1322.50	424.66	-127.25	0.0	1322.50	519.99	0.022	0.0	0.867
1.00e-03	6.85	1577.00	392.50	-104.50	0.0	0.0	0.0	0.0	0.0	0.0
Risulta	4206.73									

Modo	Frequenza	Periodo	Acc. Spettrale	M efficace X x g	%	M efficace Y x g	%	M efficace Z x g	%	Energia	Energia x v
	Hz	sec	g	kN		kN		kN			
1	3.024	0.331	0.143	2.83	6.72e-02	2804.90	66.7	352.96	8.4	0.0	0.0

Modo	Frequenza	Periodo	Acc. Spettrale	M efficace X x g	%	M efficace Y x g	%	M efficace Z x g	%	Energia	Energia x v
2	4.786	0.209	0.143	797.46	19.0	3.14	7.46e-02	25.38	0.6	0.0	0.0
3	6.616	0.151	0.143	19.53	0.5	102.17	2.4	1720.64	40.9	0.0	0.0
4	6.873	0.145	0.143	0.02	4.41e-04	177.55	4.2	2036.21	48.4	0.0	0.0
5	7.061	0.142	0.143	56.15	1.3	3.39	8.07e-02	62.52	1.5	0.0	0.0
6	9.082	0.110	0.125	0.08	1.99e-03	0.25	5.95e-03	5.79	0.1	0.0	0.0
7	11.489	0.087	0.110	2.14	5.08e-02	1.42	3.37e-02	0.90	2.14e-02	0.0	0.0
8	18.719	0.053	0.088	3208.51	76.3	1.86	4.43e-02	0.01	3.49e-04	0.0	0.0
9	27.654	0.036	0.077	5.76	0.1	797.94	19.0	1.33	3.17e-02	0.0	0.0
Risulta				4092.49		3892.62		4205.74			
In percentuale				97.28		92.53		99.98			

CDC	Tipo	Sigla Id	Note
13	Edk	CDC=Ed (dinamico SLD) alfa=0.0 (ecc. +)	
			categoria suolo: C
			fattore di sito S = 1.500
			ordinata spettro (tratto Tb-Tc) = 0.166 g
			angolo di ingresso:0.0
			eccentricità aggiuntiva: positiva
			periodo proprio T1: 0.053 sec.
			numero di modi considerati: 9
			combinaz. modale: CQC

Quota	M Sismica x g	Pos. GX	Pos. GY	E agg. X-X	E agg. Y-Y	Pos. KX	Pos. KY	(r/Ls)^2	rapp. ex/rx	rapp. ey/ry
cm	kN	cm	cm	cm	cm	cm	cm			
463.01	24.91	1323.70	550.00	0.0	-1.06e-05	0.0	0.0	0.0	0.0	0.0
460.00	83.99	1322.44	520.00	0.0	-3.63e-06	0.0	0.0	0.0	0.0	0.0
454.89	90.86	1322.50	469.00	0.0	-3.63e-06	0.0	0.0	0.0	0.0	0.0
449.79	89.45	1322.50	418.00	0.0	-3.63e-06	0.0	0.0	0.0	0.0	0.0
444.68	88.03	1322.50	367.00	0.0	-3.63e-06	0.0	0.0	0.0	0.0	0.0
439.58	85.81	1322.50	316.00	0.0	-3.63e-06	0.0	0.0	0.0	0.0	0.0
434.47	46.48	1322.50	265.00	0.0	-3.63e-06	0.0	0.0	0.0	0.0	0.0
433.97	46.48	1322.50	260.00	0.0	-3.63e-06	0.0	0.0	0.0	0.0	0.0
432.50	83.72	1322.50	442.80	0.0	-13.00	1322.50	519.99	0.031	0.0	0.590
429.00	84.64	1322.50	208.99	0.0	-2.27e-05	0.0	0.0	0.0	0.0	0.0
424.03	84.64	1322.50	157.98	0.0	-2.27e-05	0.0	0.0	0.0	0.0	0.0
419.06	85.44	1322.50	106.97	0.0	-2.28e-05	0.0	0.0	0.0	0.0	0.0
414.00	75.20	1322.50	55.00	0.0	0.0	1322.50	55.00	1.392	0.0	0.0
410.59	29.04	1322.50	20.00	0.0	-1.50e-05	0.0	0.0	0.0	0.0	0.0
409.00	6.29	1322.50	55.00	0.0	0.0	0.0	0.0	0.0	0.0	0.0
405.00	101.24	1313.06	423.57	0.0	-13.00	1255.48	519.99	0.029	0.075	0.766
399.00	10.39	1322.50	55.00	0.0	0.0	0.0	0.0	0.0	0.0	0.0
389.00	16.89	1322.50	55.00	0.0	0.0	0.0	0.0	0.0	0.0	0.0
379.00	19.49	1322.50	55.00	0.0	0.0	0.0	0.0	0.0	0.0	0.0
377.50	511.52	1320.63	398.94	0.0	-13.00	1322.50	519.99	0.031	0.002	0.925
369.00	37.69	1322.50	55.00	0.0	0.0	1322.50	55.00	1.459	0.0	0.0
347.50	112.16	1322.50	424.66	0.0	-13.00	1322.50	519.99	0.031	0.0	0.728
317.50	109.58	1304.42	424.21	0.0	-13.00	1291.20	519.99	0.030	0.017	0.749
287.50	514.04	1318.55	399.20	0.0	-13.00	1279.89	519.99	0.025	0.051	1.026
257.50	111.01	1322.03	424.72	0.0	-13.00	1280.36	519.99	0.025	0.056	0.809
227.50	112.16	1322.50	424.66	0.0	-13.00	1280.36	519.99	0.025	0.057	0.810
197.50	517.77	1322.50	399.47	0.0	-13.00	1280.36	519.99	0.025	0.057	1.024
167.50	112.16	1322.50	424.66	0.0	-13.00	1280.36	519.99	0.025	0.057	0.810
137.50	112.16	1322.50	424.66	0.0	-13.00	1280.36	519.99	0.025	0.057	0.810
107.50	528.68	1322.50	399.99	0.0	-13.00	1280.36	519.99	0.025	0.057	1.019
71.67	133.97	1322.50	424.66	0.0	-13.00	1322.50	519.99	0.022	0.0	0.867
35.83	133.97	1322.50	424.66	0.0	-13.00	1322.50	519.99	0.022	0.0	0.867
1.00e-03	6.85	1577.00	392.50	0.0	-7.65	0.0	0.0	0.0	0.0	0.0
Risulta	4206.73									

Modo	Frequenza	Periodo	Acc. Spettrale	M efficace X x g	%	M efficace Y x g	%	M efficace Z x g	%	Energia	Energia x v
	Hz	sec	g	kN		kN		kN			
1	3.038	0.329	0.166	1.14e-03	2.70e-05	2805.29	66.7	362.80	8.6	0.0	0.0
2	4.735	0.211	0.166	811.01	19.3	7.53e-03	1.79e-04	9.05e-04	2.15e-05	0.0	0.0
3	6.699	0.149	0.166	3.54e-03	8.41e-05	198.24	4.7	2976.76	70.8	0.0	0.0
4	6.957	0.144	0.165	71.61	1.7	4.22	0.1	40.08	1.0	0.0	0.0
5	6.965	0.144	0.164	4.17	9.90e-02	82.53	2.0	823.50	19.6	0.0	0.0
6	13.239	0.076	0.116	6.55e-04	1.56e-05	0.57	1.34e-02	1.26	3.00e-02	0.0	0.0
7	18.744	0.053	0.100	3208.20	76.2	7.25e-04	1.72e-05	3.30e-05	0.0	0.0	0.0
8	22.561	0.044	0.094	2.54e-03	6.03e-05	295.14	7.0	1.00	2.37e-02	0.0	0.0
9	40.578	0.025	0.080	6.18e-05	1.47e-06	771.44	18.3	0.47	1.12e-02	0.0	0.0
Risulta				4094.99		4157.43		4205.87			

Modo	Frequenza	Periodo	Acc. Spettrale	M efficace X x g	%	M efficace Y x g	%	M efficace Z x g	%	Energia	Energia x v
In percentuale				97.24		98.83		99.98			

CDC	Tipo	Sigla Id	Note
14	Edk	CDC=Ed (dinamico SLD) alfa=0.0 (ecc. -)	
			categoria suolo: C
			fattore di sito S = 1.500
			ordinata spettro (tratto Tb-Tc) = 0.166 g
			angolo di ingresso:0.0
			eccentricità aggiuntiva: negativa
			periodo proprio T1: 0.054 sec.
			numero di modi considerati: 9
			combinaz. modale: CQC

Quota	M Sismica x g	Pos. GX	Pos. GY	E agg. X-X	E agg. Y-Y	Pos. KX	Pos. KY	(r/Ls)^2	rapp. ex/rx	rapp. ey/ry
cm	kN	cm	cm	cm	cm	cm	cm			
463.01	24.91	1323.70	550.00	0.0	1.06e-05	0.0	0.0	0.0	0.0	0.0
460.00	83.99	1322.44	520.00	0.0	3.63e-06	0.0	0.0	0.0	0.0	0.0
454.89	90.86	1322.50	469.00	0.0	3.63e-06	0.0	0.0	0.0	0.0	0.0
449.79	89.45	1322.50	418.00	0.0	3.63e-06	0.0	0.0	0.0	0.0	0.0
444.68	88.03	1322.50	367.00	0.0	3.63e-06	0.0	0.0	0.0	0.0	0.0
439.58	85.81	1322.50	316.00	0.0	3.63e-06	0.0	0.0	0.0	0.0	0.0
434.47	46.48	1322.50	265.00	0.0	3.63e-06	0.0	0.0	0.0	0.0	0.0
433.97	46.48	1322.50	260.00	0.0	3.63e-06	0.0	0.0	0.0	0.0	0.0
432.50	83.72	1322.50	442.80	0.0	13.00	1322.50	519.99	0.031	0.0	0.590
429.00	84.64	1322.50	208.99	0.0	2.27e-05	0.0	0.0	0.0	0.0	0.0
424.03	84.64	1322.50	157.98	0.0	2.27e-05	0.0	0.0	0.0	0.0	0.0
419.06	85.44	1322.50	106.97	0.0	2.28e-05	0.0	0.0	0.0	0.0	0.0
414.00	75.20	1322.50	55.00	0.0	0.0	1322.50	55.00	1.392	0.0	0.0
410.59	29.04	1322.50	20.00	0.0	1.50e-05	0.0	0.0	0.0	0.0	0.0
409.00	6.29	1322.50	55.00	0.0	0.0	0.0	0.0	0.0	0.0	0.0
405.00	101.24	1313.06	423.57	0.0	13.00	1255.48	519.99	0.029	0.075	0.766
399.00	10.39	1322.50	55.00	0.0	0.0	0.0	0.0	0.0	0.0	0.0
389.00	16.89	1322.50	55.00	0.0	0.0	0.0	0.0	0.0	0.0	0.0
379.00	19.49	1322.50	55.00	0.0	0.0	0.0	0.0	0.0	0.0	0.0
377.50	511.52	1320.63	398.94	0.0	13.00	1322.50	519.99	0.031	0.002	0.925
369.00	37.69	1322.50	55.00	0.0	0.0	1322.50	55.00	1.459	0.0	0.0
347.50	112.16	1322.50	424.66	0.0	13.00	1322.50	519.99	0.031	0.0	0.728
317.50	109.58	1304.42	424.21	0.0	13.00	1291.20	519.99	0.030	0.017	0.749
287.50	514.04	1318.55	399.20	0.0	13.00	1279.89	519.99	0.025	0.051	1.026
257.50	111.01	1322.03	424.72	0.0	13.00	1280.36	519.99	0.025	0.056	0.809
227.50	112.16	1322.50	424.66	0.0	13.00	1280.36	519.99	0.025	0.057	0.810
197.50	517.77	1322.50	399.47	0.0	13.00	1280.36	519.99	0.025	0.057	1.024
167.50	112.16	1322.50	424.66	0.0	13.00	1280.36	519.99	0.025	0.057	0.810
137.50	112.16	1322.50	424.66	0.0	13.00	1280.36	519.99	0.025	0.057	0.810
107.50	528.68	1322.50	399.99	0.0	13.00	1280.36	519.99	0.025	0.057	1.019
71.67	133.97	1322.50	424.66	0.0	13.00	1322.50	519.99	0.022	0.0	0.867
35.83	133.97	1322.50	424.66	0.0	13.00	1322.50	519.99	0.022	0.0	0.867
1.00e-03	6.85	1577.00	392.50	0.0	7.65	0.0	0.0	0.0	0.0	0.0
Risulta	4206.73									

Modo	Frequenza	Periodo	Acc. Spettrale	M efficace X x g	%	M efficace Y x g	%	M efficace Z x g	%	Energia	Energia x v
	Hz	sec	g	kN		kN		kN			
1	3.038	0.329	0.166	1.04e-03	2.46e-05	2805.29	66.7	362.80	8.6	0.0	0.0
2	4.761	0.210	0.166	768.68	18.3	7.45e-03	1.77e-04	9.97e-04	2.37e-05	0.0	0.0
3	6.699	0.149	0.166	4.90e-03	1.17e-04	198.23	4.7	2976.65	70.8	0.0	0.0
4	6.948	0.144	0.165	86.74	2.1	0.85	2.03e-02	7.61	0.2	0.0	0.0
5	6.965	0.144	0.164	1.14	2.72e-02	85.90	2.0	856.08	20.4	0.0	0.0
6	13.237	0.076	0.116	9.72e-04	2.31e-05	0.56	1.34e-02	1.27	3.01e-02	0.0	0.0
7	18.642	0.054	0.100	3232.06	76.8	6.35e-04	1.51e-05	3.17e-05	0.0	0.0	0.0
8	22.590	0.044	0.094	1.21e-03	2.87e-05	298.13	7.1	1.00	2.38e-02	0.0	0.0
9	40.787	0.025	0.080	3.68e-04	8.76e-06	772.17	18.4	0.47	1.11e-02	0.0	0.0
Risulta				4088.64		4161.15		4205.87			
In percentuale				97.19		98.92		99.98			

CDC	Tipo	Sigla Id	Note
15	Edk	CDC=Ed (dinamico SLD) alfa=90.00 (ecc. +)	
			categoria suolo: C
			fattore di sito S = 1.500
			ordinata spettro (tratto Tb-Tc) = 0.166 g
			angolo di ingresso:90.00

CDC	Tipo	Sigla Id	Note
			eccentricità aggiuntiva: positiva
			periodo proprio T1: 0.331 sec.
			numero di modi considerati: 9
			combinaz. modale: CQC

Quota	M Sismica x g	Pos. GX	Pos. GY	E agg. X-X	E agg. Y-Y	Pos. KX	Pos. KY	(r/Ls)^2	rapp. ex/rx	rapp. ey/ry
cm	kN	cm	cm	cm	cm	cm	cm			
463.01	24.91	1323.70	550.00	130.35	0.0	0.0	0.0	0.0	0.0	0.0
460.00	83.99	1322.44	520.00	130.25	0.0	0.0	0.0	0.0	0.0	0.0
454.89	90.86	1322.50	469.00	130.25	0.0	0.0	0.0	0.0	0.0	0.0
449.79	89.45	1322.50	418.00	130.25	0.0	0.0	0.0	0.0	0.0	0.0
444.68	88.03	1322.50	367.00	130.25	0.0	0.0	0.0	0.0	0.0	0.0
439.58	85.81	1322.50	316.00	130.25	0.0	0.0	0.0	0.0	0.0	0.0
434.47	46.48	1322.50	265.00	130.25	0.0	0.0	0.0	0.0	0.0	0.0
433.97	46.48	1322.50	260.00	130.25	0.0	0.0	0.0	0.0	0.0	0.0
432.50	83.72	1322.50	442.80	127.25	0.0	1322.50	519.99	0.031	0.0	0.590
429.00	84.64	1322.50	208.99	130.25	0.0	0.0	0.0	0.0	0.0	0.0
424.03	84.64	1322.50	157.98	130.25	0.0	0.0	0.0	0.0	0.0	0.0
419.06	85.44	1322.50	106.97	130.25	0.0	0.0	0.0	0.0	0.0	0.0
414.00	75.20	1322.50	55.00	130.25	0.0	1322.50	55.00	1.392	0.0	0.0
410.59	29.04	1322.50	20.00	130.25	0.0	0.0	0.0	0.0	0.0	0.0
409.00	6.29	1322.50	55.00	104.50	0.0	0.0	0.0	0.0	0.0	0.0
405.00	101.24	1313.06	423.57	127.25	0.0	1255.48	519.99	0.029	0.075	0.766
399.00	10.39	1322.50	55.00	110.19	0.0	0.0	0.0	0.0	0.0	0.0
389.00	16.89	1322.50	55.00	115.88	0.0	0.0	0.0	0.0	0.0	0.0
379.00	19.49	1322.50	55.00	121.56	0.0	0.0	0.0	0.0	0.0	0.0
377.50	511.52	1320.63	398.94	127.25	0.0	1322.50	519.99	0.031	0.002	0.925
369.00	37.69	1322.50	55.00	127.25	0.0	1322.50	55.00	1.459	0.0	0.0
347.50	112.16	1322.50	424.66	127.25	0.0	1322.50	519.99	0.031	0.0	0.728
317.50	109.58	1304.42	424.21	127.25	0.0	1291.20	519.99	0.030	0.017	0.749
287.50	514.04	1318.55	399.20	127.25	0.0	1279.89	519.99	0.025	0.051	1.026
257.50	111.01	1322.03	424.72	127.25	0.0	1280.36	519.99	0.025	0.056	0.809
227.50	112.16	1322.50	424.66	127.25	0.0	1280.36	519.99	0.025	0.057	0.810
197.50	517.77	1322.50	399.47	127.25	0.0	1280.36	519.99	0.025	0.057	1.024
167.50	112.16	1322.50	424.66	127.25	0.0	1280.36	519.99	0.025	0.057	0.810
137.50	112.16	1322.50	424.66	127.25	0.0	1280.36	519.99	0.025	0.057	0.810
107.50	528.68	1322.50	399.99	127.25	0.0	1280.36	519.99	0.025	0.057	1.019
71.67	133.97	1322.50	424.66	127.25	0.0	1322.50	519.99	0.022	0.0	0.867
35.83	133.97	1322.50	424.66	127.25	0.0	1322.50	519.99	0.022	0.0	0.867
1.00e-03	6.85	1577.00	392.50	104.50	0.0	0.0	0.0	0.0	0.0	0.0
Risulta	4206.73									

Modo	Frequenza	Periodo	Acc. Spettrale	M efficace X x g	%	M efficace Y x g	%	M efficace Z x g	%	Energia	Energia x v
	Hz	sec	g	kN		kN		kN			
1	3.025	0.331	0.166	2.63	6.24e-02	2805.40	66.7	353.26	8.4	0.0	0.0
2	4.783	0.209	0.166	796.63	18.9	2.59	6.16e-02	26.06	0.6	0.0	0.0
3	6.617	0.151	0.166	19.56	0.5	99.29	2.4	1683.65	40.0	0.0	0.0
4	6.871	0.146	0.166	0.06	1.32e-03	181.66	4.3	2092.94	49.8	0.0	0.0
5	7.058	0.142	0.163	56.76	1.3	2.19	5.20e-02	42.48	1.0	0.0	0.0
6	9.248	0.108	0.139	0.16	3.71e-03	0.22	5.22e-03	5.26	0.1	0.0	0.0
7	11.580	0.086	0.124	2.12	5.03e-02	1.58	3.75e-02	0.74	1.77e-02	0.0	0.0
8	18.718	0.053	0.100	3208.65	76.3	2.00	4.76e-02	0.02	4.22e-04	0.0	0.0
9	27.686	0.036	0.088	6.13	0.1	799.23	19.0	1.33	3.17e-02	0.0	0.0
Risulta				4092.67		3894.15		4205.74			
In percentuale				97.29		92.57		99.98			

CDC	Tipo	Sigla Id	Note
16	Edk	CDC=Ed (dinamico SLD) alfa=90.00 (ecc. -)	
			categoria suolo: C
			fattore di sito S = 1.500
			ordinata spettro (tratto Tb-Tc) = 0.166 g
			angolo di ingresso:90.00
			eccentricità aggiuntiva: negativa
			periodo proprio T1: 0.331 sec.
			numero di modi considerati: 9
			combinaz. modale: CQC

Quota	M Sismica x g	Pos. GX	Pos. GY	E agg. X-X	E agg. Y-Y	Pos. KX	Pos. KY	(r/Ls)^2	rapp. ex/rx	rapp. ey/ry
cm	kN	cm	cm	cm	cm	cm	cm			
463.01	24.91	1323.70	550.00	-130.35	0.0	0.0	0.0	0.0	0.0	0.0
460.00	83.99	1322.44	520.00	-130.25	0.0	0.0	0.0	0.0	0.0	0.0

Quota	M Sismica x g	Pos. GX	Pos. GY	E agg. X-X	E agg. Y-Y	Pos. KX	Pos. KY	(r/Ls)^2	rapp. ex/rx	rapp. ey/ry
454.89	90.86	1322.50	469.00	-130.25	0.0	0.0	0.0	0.0	0.0	0.0
449.79	89.45	1322.50	418.00	-130.25	0.0	0.0	0.0	0.0	0.0	0.0
444.68	88.03	1322.50	367.00	-130.25	0.0	0.0	0.0	0.0	0.0	0.0
439.58	85.81	1322.50	316.00	-130.25	0.0	0.0	0.0	0.0	0.0	0.0
434.47	46.48	1322.50	265.00	-130.25	0.0	0.0	0.0	0.0	0.0	0.0
433.97	46.48	1322.50	260.00	-130.25	0.0	0.0	0.0	0.0	0.0	0.0
432.50	83.72	1322.50	442.80	-127.25	0.0	1322.50	519.99	0.031	0.0	0.590
429.00	84.64	1322.50	208.99	-130.25	0.0	0.0	0.0	0.0	0.0	0.0
424.03	84.64	1322.50	157.98	-130.25	0.0	0.0	0.0	0.0	0.0	0.0
419.06	85.44	1322.50	106.97	-130.25	0.0	0.0	0.0	0.0	0.0	0.0
414.00	75.20	1322.50	55.00	-130.25	0.0	1322.50	55.00	1.392	0.0	0.0
410.59	29.04	1322.50	20.00	-130.25	0.0	0.0	0.0	0.0	0.0	0.0
409.00	6.29	1322.50	55.00	-104.50	0.0	0.0	0.0	0.0	0.0	0.0
405.00	101.24	1313.06	423.57	-127.25	0.0	1255.48	519.99	0.029	0.075	0.766
399.00	10.39	1322.50	55.00	-110.19	0.0	0.0	0.0	0.0	0.0	0.0
389.00	16.89	1322.50	55.00	-115.88	0.0	0.0	0.0	0.0	0.0	0.0
379.00	19.49	1322.50	55.00	-121.56	0.0	0.0	0.0	0.0	0.0	0.0
377.50	511.52	1320.63	398.94	-127.25	0.0	1322.50	519.99	0.031	0.002	0.925
369.00	37.69	1322.50	55.00	-127.25	0.0	1322.50	55.00	1.459	0.0	0.0
347.50	112.16	1322.50	424.66	-127.25	0.0	1322.50	519.99	0.031	0.0	0.728
317.50	109.58	1304.42	424.21	-127.25	0.0	1291.20	519.99	0.030	0.017	0.749
287.50	514.04	1318.55	399.20	-127.25	0.0	1279.89	519.99	0.025	0.051	1.026
257.50	111.01	1322.03	424.72	-127.25	0.0	1280.36	519.99	0.025	0.056	0.809
227.50	112.16	1322.50	424.66	-127.25	0.0	1280.36	519.99	0.025	0.057	0.810
197.50	517.77	1322.50	399.47	-127.25	0.0	1280.36	519.99	0.025	0.057	1.024
167.50	112.16	1322.50	424.66	-127.25	0.0	1280.36	519.99	0.025	0.057	0.810
137.50	112.16	1322.50	424.66	-127.25	0.0	1280.36	519.99	0.025	0.057	0.810
107.50	528.68	1322.50	399.99	-127.25	0.0	1280.36	519.99	0.025	0.057	1.019
71.67	133.97	1322.50	424.66	-127.25	0.0	1322.50	519.99	0.022	0.0	0.867
35.83	133.97	1322.50	424.66	-127.25	0.0	1322.50	519.99	0.022	0.0	0.867
1.00e-03	6.85	1577.00	392.50	-104.50	0.0	0.0	0.0	0.0	0.0	0.0
Risulta	4206.73									

Modo	Frequenza	Periodo	Acc. Spettrale	M efficace X x g	%	M efficace Y x g	%	M efficace Z x g	%	Energia	Energia x v
	Hz	sec	g	kN		kN		kN			
1	3.024	0.331	0.166	2.83	6.72e-02	2804.90	66.7	352.96	8.4	0.0	0.0
2	4.786	0.209	0.166	797.46	19.0	3.14	7.46e-02	25.38	0.6	0.0	0.0
3	6.616	0.151	0.166	19.53	0.5	102.17	2.4	1720.64	40.9	0.0	0.0
4	6.873	0.145	0.166	0.02	4.41e-04	177.55	4.2	2036.21	48.4	0.0	0.0
5	7.061	0.142	0.163	56.15	1.3	3.39	8.07e-02	62.52	1.5	0.0	0.0
6	9.082	0.110	0.141	0.08	1.99e-03	0.25	5.95e-03	5.79	0.1	0.0	0.0
7	11.489	0.087	0.124	2.14	5.08e-02	1.42	3.37e-02	0.90	2.14e-02	0.0	0.0
8	18.719	0.053	0.100	3208.51	76.3	1.86	4.43e-02	0.01	3.49e-04	0.0	0.0
9	27.654	0.036	0.088	5.76	0.1	797.94	19.0	1.33	3.17e-02	0.0	0.0
Risulta				4092.49		3892.62		4205.74			
In percentuale				97.28		92.53		99.98			

CDC	Tipo	Sigla Id	Note
17	Edk	CDC=Ed (dinamico SLU) alfa=0.0 (ecc. +)	
			categoria suolo: C
			fattore di sito S = 1.500
			ordinata spettro (tratto Tb-Tc) = 0.213 g
			angolo di ingresso:0.0
			eccentricità aggiuntiva: positiva
			periodo proprio T1: 0.053 sec.
			fattore q: 1.500
			fattore per spost. mu d: 3.500
			classe di duttilità CD: B
			numero di modi considerati: 9
			combinaz. modale: CQC

Quota	M Sismica x g	Pos. GX	Pos. GY	E agg. X-X	E agg. Y-Y	Pos. KX	Pos. KY	(r/Ls)^2	rapp. ex/rx	rapp. ey/ry
cm	kN	cm	cm	cm	cm	cm	cm			
463.01	24.91	1323.70	550.00	0.0	-1.06e-05	0.0	0.0	0.0	0.0	0.0
460.00	83.99	1322.44	520.00	0.0	-3.63e-06	0.0	0.0	0.0	0.0	0.0
454.89	90.86	1322.50	469.00	0.0	-3.63e-06	0.0	0.0	0.0	0.0	0.0
449.79	89.45	1322.50	418.00	0.0	-3.63e-06	0.0	0.0	0.0	0.0	0.0
444.68	88.03	1322.50	367.00	0.0	-3.63e-06	0.0	0.0	0.0	0.0	0.0
439.58	85.81	1322.50	316.00	0.0	-3.63e-06	0.0	0.0	0.0	0.0	0.0
434.47	46.48	1322.50	265.00	0.0	-3.63e-06	0.0	0.0	0.0	0.0	0.0
433.97	46.48	1322.50	260.00	0.0	-3.63e-06	0.0	0.0	0.0	0.0	0.0
432.50	83.72	1322.50	442.80	0.0	-13.00	1322.50	519.99	0.031	0.0	0.590

Quota	M Sismica x g	Pos. GX	Pos. GY	E agg. X-X	E agg. Y-Y	Pos. KX	Pos. KY	(r/Ls)^2	rapp. ex/rx	rapp. ey/ry
429.00	84.64	1322.50	208.99	0.0	-2.27e-05	0.0	0.0	0.0	0.0	0.0
424.03	84.64	1322.50	157.98	0.0	-2.27e-05	0.0	0.0	0.0	0.0	0.0
419.06	85.44	1322.50	106.97	0.0	-2.28e-05	0.0	0.0	0.0	0.0	0.0
414.00	75.20	1322.50	55.00	0.0	0.0	1322.50	55.00	1.392	0.0	0.0
410.59	29.04	1322.50	20.00	0.0	-1.50e-05	0.0	0.0	0.0	0.0	0.0
409.00	6.29	1322.50	55.00	0.0	0.0	0.0	0.0	0.0	0.0	0.0
405.00	101.24	1313.06	423.57	0.0	-13.00	1255.48	519.99	0.029	0.075	0.766
399.00	10.39	1322.50	55.00	0.0	0.0	0.0	0.0	0.0	0.0	0.0
389.00	16.89	1322.50	55.00	0.0	0.0	0.0	0.0	0.0	0.0	0.0
379.00	19.49	1322.50	55.00	0.0	0.0	0.0	0.0	0.0	0.0	0.0
377.50	511.52	1320.63	398.94	0.0	-13.00	1322.50	519.99	0.031	0.002	0.925
369.00	37.69	1322.50	55.00	0.0	0.0	1322.50	55.00	1.459	0.0	0.0
347.50	112.16	1322.50	424.66	0.0	-13.00	1322.50	519.99	0.031	0.0	0.728
317.50	109.58	1304.42	424.21	0.0	-13.00	1291.20	519.99	0.030	0.017	0.749
287.50	514.04	1318.55	399.20	0.0	-13.00	1279.89	519.99	0.025	0.051	1.026
257.50	111.01	1322.03	424.72	0.0	-13.00	1280.36	519.99	0.025	0.056	0.809
227.50	112.16	1322.50	424.66	0.0	-13.00	1280.36	519.99	0.025	0.057	0.810
197.50	517.77	1322.50	399.47	0.0	-13.00	1280.36	519.99	0.025	0.057	1.024
167.50	112.16	1322.50	424.66	0.0	-13.00	1280.36	519.99	0.025	0.057	0.810
137.50	112.16	1322.50	424.66	0.0	-13.00	1280.36	519.99	0.025	0.057	0.810
107.50	528.68	1322.50	399.99	0.0	-13.00	1280.36	519.99	0.025	0.057	1.019
71.67	133.97	1322.50	424.66	0.0	-13.00	1322.50	519.99	0.022	0.0	0.867
35.83	133.97	1322.50	424.66	0.0	-13.00	1322.50	519.99	0.022	0.0	0.867
1.00e-03	6.85	1577.00	392.50	0.0	-7.65	0.0	0.0	0.0	0.0	0.0
Risulta	4206.73									

Modo	Frequenza	Periodo	Acc. Spettrale	M efficace X x g	%	M efficace Y x g	%	M efficace Z x g	%	Energia	Energia x v
	Hz	sec	g	kN		kN		kN			
1	3.038	0.329	0.213	1.14e-03	2.70e-05	2805.29	66.7	362.80	8.6	0.0	0.0
2	4.735	0.211	0.213	811.01	19.3	7.53e-03	1.79e-04	9.05e-04	2.15e-05	0.0	0.0
3	6.699	0.149	0.201	3.54e-03	8.41e-05	198.24	4.7	2976.76	70.8	0.0	0.0
4	6.957	0.144	0.197	71.61	1.7	4.22	0.1	40.08	1.0	0.0	0.0
5	6.965	0.144	0.197	4.17	9.90e-02	82.53	2.0	823.50	19.6	0.0	0.0
6	13.239	0.076	0.156	6.55e-04	1.56e-05	0.57	1.34e-02	1.26	3.00e-02	0.0	0.0
7	18.744	0.053	0.142	3208.20	76.2	7.25e-04	1.72e-05	3.30e-05	0.0	0.0	0.0
8	22.561	0.044	0.137	2.54e-03	6.03e-05	295.14	7.0	1.00	2.37e-02	0.0	0.0
9	40.578	0.025	0.125	6.18e-05	1.47e-06	771.44	18.3	0.47	1.12e-02	0.0	0.0
Risulta				4094.99		4157.43		4205.87			
In percentuale				97.24		98.83		99.98			

CDC	Tipo	Sigla Id	Note
18	Edk	CDC=Ed (dinamico SLU) alfa=0.0 (ecc. -)	
			categoria suolo: C
			fattore di sito S = 1.500
			ordinata spettro (tratto Tb-Tc) = 0.213 g
			angolo di ingresso:0.0
			eccentricità aggiuntiva: negativa
			periodo proprio T1: 0.054 sec.
			fattore q: 1.500
			fattore per spost. mu d: 3.500
			classe di duttilità CD: B
			numero di modi considerati: 9
			combinaz. modale: CQC

Quota	M Sismica x g	Pos. GX	Pos. GY	E agg. X-X	E agg. Y-Y	Pos. KX	Pos. KY	(r/Ls)^2	rapp. ex/rx	rapp. ey/ry
cm	kN	cm	cm	cm	cm	cm	cm			
463.01	24.91	1323.70	550.00	0.0	1.06e-05	0.0	0.0	0.0	0.0	0.0
460.00	83.99	1322.44	520.00	0.0	3.63e-06	0.0	0.0	0.0	0.0	0.0
454.89	90.86	1322.50	469.00	0.0	3.63e-06	0.0	0.0	0.0	0.0	0.0
449.79	89.45	1322.50	418.00	0.0	3.63e-06	0.0	0.0	0.0	0.0	0.0
444.68	88.03	1322.50	367.00	0.0	3.63e-06	0.0	0.0	0.0	0.0	0.0
439.58	85.81	1322.50	316.00	0.0	3.63e-06	0.0	0.0	0.0	0.0	0.0
434.47	46.48	1322.50	265.00	0.0	3.63e-06	0.0	0.0	0.0	0.0	0.0
433.97	46.48	1322.50	260.00	0.0	3.63e-06	0.0	0.0	0.0	0.0	0.0
432.50	83.72	1322.50	442.80	0.0	13.00	1322.50	519.99	0.031	0.0	0.590
429.00	84.64	1322.50	208.99	0.0	2.27e-05	0.0	0.0	0.0	0.0	0.0
424.03	84.64	1322.50	157.98	0.0	2.27e-05	0.0	0.0	0.0	0.0	0.0
419.06	85.44	1322.50	106.97	0.0	2.28e-05	0.0	0.0	0.0	0.0	0.0
414.00	75.20	1322.50	55.00	0.0	0.0	1322.50	55.00	1.392	0.0	0.0
410.59	29.04	1322.50	20.00	0.0	1.50e-05	0.0	0.0	0.0	0.0	0.0
409.00	6.29	1322.50	55.00	0.0	0.0	0.0	0.0	0.0	0.0	0.0
405.00	101.24	1313.06	423.57	0.0	13.00	1255.48	519.99	0.029	0.075	0.766

Quota	M Sismica x g	Pos. GX	Pos. GY	E agg. X-X	E agg. Y-Y	Pos. KX	Pos. KY	(r/Ls)^2	rapp. ex/rx	rapp. ey/ry
399.00	10.39	1322.50	55.00	0.0	0.0	0.0	0.0	0.0	0.0	0.0
389.00	16.89	1322.50	55.00	0.0	0.0	0.0	0.0	0.0	0.0	0.0
379.00	19.49	1322.50	55.00	0.0	0.0	0.0	0.0	0.0	0.0	0.0
377.50	511.52	1320.63	398.94	0.0	13.00	1322.50	519.99	0.031	0.002	0.925
369.00	37.69	1322.50	55.00	0.0	0.0	1322.50	55.00	1.459	0.0	0.0
347.50	112.16	1322.50	424.66	0.0	13.00	1322.50	519.99	0.031	0.0	0.728
317.50	109.58	1304.42	424.21	0.0	13.00	1291.20	519.99	0.030	0.017	0.749
287.50	514.04	1318.55	399.20	0.0	13.00	1279.89	519.99	0.025	0.051	1.026
257.50	111.01	1322.03	424.72	0.0	13.00	1280.36	519.99	0.025	0.056	0.809
227.50	112.16	1322.50	424.66	0.0	13.00	1280.36	519.99	0.025	0.057	0.810
197.50	517.77	1322.50	399.47	0.0	13.00	1280.36	519.99	0.025	0.057	1.024
167.50	112.16	1322.50	424.66	0.0	13.00	1280.36	519.99	0.025	0.057	0.810
137.50	112.16	1322.50	424.66	0.0	13.00	1280.36	519.99	0.025	0.057	0.810
107.50	528.68	1322.50	399.99	0.0	13.00	1280.36	519.99	0.025	0.057	1.019
71.67	133.97	1322.50	424.66	0.0	13.00	1322.50	519.99	0.022	0.0	0.867
35.83	133.97	1322.50	424.66	0.0	13.00	1322.50	519.99	0.022	0.0	0.867
1.00e-03	6.85	1577.00	392.50	0.0	7.65	0.0	0.0	0.0	0.0	0.0
Risulta	4206.73									

Modo	Frequenza	Periodo	Acc. Spettrale	M efficace X x g	%	M efficace Y x g	%	M efficace Z x g	%	Energia	Energia x v
	Hz	sec	g	kN		kN		kN			
1	3.038	0.329	0.213	1.04e-03	2.46e-05	2805.29	66.7	362.80	8.6	0.0	0.0
2	4.761	0.210	0.213	768.68	18.3	7.45e-03	1.77e-04	9.97e-04	2.37e-05	0.0	0.0
3	6.699	0.149	0.201	4.90e-03	1.17e-04	198.23	4.7	2976.65	70.8	0.0	0.0
4	6.948	0.144	0.197	86.74	2.1	0.85	2.03e-02	7.61	0.2	0.0	0.0
5	6.965	0.144	0.197	1.14	2.72e-02	85.90	2.0	856.08	20.4	0.0	0.0
6	13.237	0.076	0.156	9.72e-04	2.31e-05	0.56	1.34e-02	1.27	3.01e-02	0.0	0.0
7	18.642	0.054	0.143	3232.06	76.8	6.35e-04	1.51e-05	3.17e-05	0.0	0.0	0.0
8	22.590	0.044	0.137	1.21e-03	2.87e-05	298.13	7.1	1.00	2.38e-02	0.0	0.0
9	40.787	0.025	0.125	3.68e-04	8.76e-06	772.17	18.4	0.47	1.11e-02	0.0	0.0
Risulta				4088.64		4161.15		4205.87			
In percentuale				97.19		98.92		99.98			

CDC	Tipo	Sigla Id	Note
19	Edk	CDC=Ed (dinamico SLU) alfa=90.00 (ecc. +)	
			categoria suolo: C
			fattore di sito S = 1.500
			ordinata spettro (tratto Tb-Tc) = 0.213 g
			angolo di ingresso:90.00
			eccentricità aggiuntiva: positiva
			periodo proprio T1: 0.331 sec.
			fattore q: 1.500
			fattore per spost. mu d: 1.771
			classe di duttilità CD: B
			numero di modi considerati: 9
			combinaz. modale: CQC

Quota	M Sismica x g	Pos. GX	Pos. GY	E agg. X-X	E agg. Y-Y	Pos. KX	Pos. KY	(r/Ls)^2	rapp. ex/rx	rapp. ey/ry
cm	kN	cm	cm	cm	cm	cm	cm			
463.01	24.91	1323.70	550.00	130.35	0.0	0.0	0.0	0.0	0.0	0.0
460.00	83.99	1322.44	520.00	130.25	0.0	0.0	0.0	0.0	0.0	0.0
454.89	90.86	1322.50	469.00	130.25	0.0	0.0	0.0	0.0	0.0	0.0
449.79	89.45	1322.50	418.00	130.25	0.0	0.0	0.0	0.0	0.0	0.0
444.68	88.03	1322.50	367.00	130.25	0.0	0.0	0.0	0.0	0.0	0.0
439.58	85.81	1322.50	316.00	130.25	0.0	0.0	0.0	0.0	0.0	0.0
434.47	46.48	1322.50	265.00	130.25	0.0	0.0	0.0	0.0	0.0	0.0
433.97	46.48	1322.50	260.00	130.25	0.0	0.0	0.0	0.0	0.0	0.0
432.50	83.72	1322.50	442.80	127.25	0.0	1322.50	519.99	0.031	0.0	0.590
429.00	84.64	1322.50	208.99	130.25	0.0	0.0	0.0	0.0	0.0	0.0
424.03	84.64	1322.50	157.98	130.25	0.0	0.0	0.0	0.0	0.0	0.0
419.06	85.44	1322.50	106.97	130.25	0.0	0.0	0.0	0.0	0.0	0.0
414.00	75.20	1322.50	55.00	130.25	0.0	1322.50	55.00	1.392	0.0	0.0
410.59	29.04	1322.50	20.00	130.25	0.0	0.0	0.0	0.0	0.0	0.0
409.00	6.29	1322.50	55.00	104.50	0.0	0.0	0.0	0.0	0.0	0.0
405.00	101.24	1313.06	423.57	127.25	0.0	1255.48	519.99	0.029	0.075	0.766
399.00	10.39	1322.50	55.00	110.19	0.0	0.0	0.0	0.0	0.0	0.0
389.00	16.89	1322.50	55.00	115.88	0.0	0.0	0.0	0.0	0.0	0.0
379.00	19.49	1322.50	55.00	121.56	0.0	0.0	0.0	0.0	0.0	0.0
377.50	511.52	1320.63	398.94	127.25	0.0	1322.50	519.99	0.031	0.002	0.925
369.00	37.69	1322.50	55.00	127.25	0.0	1322.50	55.00	1.459	0.0	0.0
347.50	112.16	1322.50	424.66	127.25	0.0	1322.50	519.99	0.031	0.0	0.728
317.50	109.58	1304.42	424.21	127.25	0.0	1291.20	519.99	0.030	0.017	0.749

Quota	M Sismica x g	Pos. GX	Pos. GY	E agg. X-X	E agg. Y-Y	Pos. KX	Pos. KY	(r/Ls)^2	rapp. ex/rx	rapp. ey/ry
287.50	514.04	1318.55	399.20	127.25	0.0	1279.89	519.99	0.025	0.051	1.026
257.50	111.01	1322.03	424.72	127.25	0.0	1280.36	519.99	0.025	0.056	0.809
227.50	112.16	1322.50	424.66	127.25	0.0	1280.36	519.99	0.025	0.057	0.810
197.50	517.77	1322.50	399.47	127.25	0.0	1280.36	519.99	0.025	0.057	1.024
167.50	112.16	1322.50	424.66	127.25	0.0	1280.36	519.99	0.025	0.057	0.810
137.50	112.16	1322.50	424.66	127.25	0.0	1280.36	519.99	0.025	0.057	0.810
107.50	528.68	1322.50	399.99	127.25	0.0	1280.36	519.99	0.025	0.057	1.019
71.67	133.97	1322.50	424.66	127.25	0.0	1322.50	519.99	0.022	0.0	0.867
35.83	133.97	1322.50	424.66	127.25	0.0	1322.50	519.99	0.022	0.0	0.867
1.00e-03	6.85	1577.00	392.50	104.50	0.0	0.0	0.0	0.0	0.0	0.0
Risulta	4206.73									

Modo	Frequenza	Periodo	Acc. Spettrale	M efficace X x g	%	M efficace Y x g	%	M efficace Z x g	%	Energia	Energia x v
	Hz	sec	g	kN		kN		kN			
1	3.025	0.331	0.213	2.63	6.24e-02	2805.40	66.7	353.26	8.4	0.0	0.0
2	4.783	0.209	0.213	796.63	18.9	2.59	6.16e-02	26.06	0.6	0.0	0.0
3	6.617	0.151	0.202	19.56	0.5	99.29	2.4	1683.65	40.0	0.0	0.0
4	6.871	0.146	0.198	0.06	1.32e-03	181.66	4.3	2092.94	49.8	0.0	0.0
5	7.058	0.142	0.196	56.76	1.3	2.19	5.20e-02	42.48	1.0	0.0	0.0
6	9.248	0.108	0.176	0.16	3.71e-03	0.22	5.22e-03	5.26	0.1	0.0	0.0
7	11.580	0.086	0.162	2.12	5.03e-02	1.58	3.75e-02	0.74	1.77e-02	0.0	0.0
8	18.718	0.053	0.142	3208.65	76.3	2.00	4.76e-02	0.02	4.22e-04	0.0	0.0
9	27.686	0.036	0.132	6.13	0.1	799.23	19.0	1.33	3.17e-02	0.0	0.0
Risulta				4092.67		3894.15		4205.74			
In percentuale				97.29		92.57		99.98			

CDC	Tipo	Sigla Id	Note
20	Edk	CDC=Ed (dinamico SLU) alfa=90.00 (ecc. -)	
			categoria suolo: C
			fattore di sito S = 1.500
			ordinata spettro (tratto Tb-Tc) = 0.213 g
			angolo di ingresso:90.00
			eccentricità aggiuntiva: negativa
			periodo proprio T1: 0.331 sec.
			fattore q: 1.500
			fattore per spost. mu d: 1.771
			classe di duttilità CD: B
			numero di modi considerati: 9
			combinaz. modale: CQC

Quota	M Sismica x g	Pos. GX	Pos. GY	E agg. X-X	E agg. Y-Y	Pos. KX	Pos. KY	(r/Ls)^2	rapp. ex/rx	rapp. ey/ry
cm	kN	cm	cm	cm	cm	cm	cm			
463.01	24.91	1323.70	550.00	-130.35	0.0	0.0	0.0	0.0	0.0	0.0
460.00	83.99	1322.44	520.00	-130.25	0.0	0.0	0.0	0.0	0.0	0.0
454.89	90.86	1322.50	469.00	-130.25	0.0	0.0	0.0	0.0	0.0	0.0
449.79	89.45	1322.50	418.00	-130.25	0.0	0.0	0.0	0.0	0.0	0.0
444.68	88.03	1322.50	367.00	-130.25	0.0	0.0	0.0	0.0	0.0	0.0
439.58	85.81	1322.50	316.00	-130.25	0.0	0.0	0.0	0.0	0.0	0.0
434.47	46.48	1322.50	265.00	-130.25	0.0	0.0	0.0	0.0	0.0	0.0
433.97	46.48	1322.50	260.00	-130.25	0.0	0.0	0.0	0.0	0.0	0.0
432.50	83.72	1322.50	442.80	-127.25	0.0	1322.50	519.99	0.031	0.0	0.590
429.00	84.64	1322.50	208.99	-130.25	0.0	0.0	0.0	0.0	0.0	0.0
424.03	84.64	1322.50	157.98	-130.25	0.0	0.0	0.0	0.0	0.0	0.0
419.06	85.44	1322.50	106.97	-130.25	0.0	0.0	0.0	0.0	0.0	0.0
414.00	75.20	1322.50	55.00	-130.25	0.0	1322.50	55.00	1.392	0.0	0.0
410.59	29.04	1322.50	20.00	-130.25	0.0	0.0	0.0	0.0	0.0	0.0
409.00	6.29	1322.50	55.00	-104.50	0.0	0.0	0.0	0.0	0.0	0.0
405.00	101.24	1313.06	423.57	-127.25	0.0	1255.48	519.99	0.029	0.075	0.766
399.00	10.39	1322.50	55.00	-110.19	0.0	0.0	0.0	0.0	0.0	0.0
389.00	16.89	1322.50	55.00	-115.88	0.0	0.0	0.0	0.0	0.0	0.0
379.00	19.49	1322.50	55.00	-121.56	0.0	0.0	0.0	0.0	0.0	0.0
377.50	511.52	1320.63	398.94	-127.25	0.0	1322.50	519.99	0.031	0.002	0.925
369.00	37.69	1322.50	55.00	-127.25	0.0	1322.50	55.00	1.459	0.0	0.0
347.50	112.16	1322.50	424.66	-127.25	0.0	1322.50	519.99	0.031	0.0	0.728
317.50	109.58	1304.42	424.21	-127.25	0.0	1291.20	519.99	0.030	0.017	0.749
287.50	514.04	1318.55	399.20	-127.25	0.0	1279.89	519.99	0.025	0.051	1.026
257.50	111.01	1322.03	424.72	-127.25	0.0	1280.36	519.99	0.025	0.056	0.809
227.50	112.16	1322.50	424.66	-127.25	0.0	1280.36	519.99	0.025	0.057	0.810
197.50	517.77	1322.50	399.47	-127.25	0.0	1280.36	519.99	0.025	0.057	1.024
167.50	112.16	1322.50	424.66	-127.25	0.0	1280.36	519.99	0.025	0.057	0.810
137.50	112.16	1322.50	424.66	-127.25	0.0	1280.36	519.99	0.025	0.057	0.810
107.50	528.68	1322.50	399.99	-127.25	0.0	1280.36	519.99	0.025	0.057	1.019

Quota	M Sismica x g	Pos. GX	Pos. GY	E agg. X-X	E agg. Y-Y	Pos. KX	Pos. KY	(r/Ls)^2	rapp. ex/rx	rapp. ey/ry
71.67	133.97	1322.50	424.66	-127.25	0.0	1322.50	519.99	0.022	0.0	0.867
35.83	133.97	1322.50	424.66	-127.25	0.0	1322.50	519.99	0.022	0.0	0.867
1.00e-03	6.85	1577.00	392.50	-104.50	0.0	0.0	0.0	0.0	0.0	0.0
Risulta	4206.73									

Modo	Frequenza	Periodo	Acc. Spettrale	M efficace X x g	%	M efficace Y x g	%	M efficace Z x g	%	Energia	Energia x v
	Hz	sec	g	kN		kN		kN			
1	3.024	0.331	0.213	2.83	6.72e-02	2804.90	66.7	352.96	8.4	0.0	0.0
2	4.786	0.209	0.213	797.46	19.0	3.14	7.46e-02	25.38	0.6	0.0	0.0
3	6.616	0.151	0.202	19.53	0.5	102.17	2.4	1720.64	40.9	0.0	0.0
4	6.873	0.145	0.198	0.02	4.41e-04	177.55	4.2	2036.21	48.4	0.0	0.0
5	7.061	0.142	0.196	56.15	1.3	3.39	8.07e-02	62.52	1.5	0.0	0.0
6	9.082	0.110	0.177	0.08	1.99e-03	0.25	5.95e-03	5.79	0.1	0.0	0.0
7	11.489	0.087	0.163	2.14	5.08e-02	1.42	3.37e-02	0.90	2.14e-02	0.0	0.0
8	18.719	0.053	0.142	3208.51	76.3	1.86	4.43e-02	0.01	3.49e-04	0.0	0.0
9	27.654	0.036	0.132	5.76	0.1	797.94	19.0	1.33	3.17e-02	0.0	0.0
Risulta				4092.49		3892.62		4205.74			
In percentuale				97.28		92.53		99.98			

Cmb	Pilas.	1000 etaT/h	etaT	inter. h	Pilas.	1000 etaT/h	etaT	inter. h	Pilas.	1000 etaT/h	etaT	inter. h
			cm	cm			cm	cm			cm	cm
57	1	1.70	0.63	369.0	2	1.79	0.66	369.0	3	1.91	0.70	369.0
	4	2.03	0.75	369.0	5	2.15	0.79	369.0	6	2.25	0.83	369.0
	27	1.78	0.08	45.0	28	1.84	0.08	45.0	29	1.93	0.09	45.0
	30	2.04	0.09	45.0	31	2.15	0.10	45.0	32	2.22	0.10	45.0
58	1	1.22	0.45	369.0	2	1.29	0.47	369.0	3	1.37	0.51	369.0
	4	1.46	0.54	369.0	5	1.56	0.57	369.0	6	1.64	0.60	369.0
	27	1.34	0.06	45.0	28	1.38	0.06	45.0	29	1.45	0.07	45.0
	30	1.54	0.07	45.0	31	1.63	0.07	45.0	32	1.68	0.08	45.0
59	1	2.19	0.81	369.0	2	2.12	0.78	369.0	3	2.02	0.74	369.0
	4	1.91	0.71	369.0	5	1.82	0.67	369.0	6	1.75	0.64	369.0
	27	2.18	0.10	45.0	28	2.12	0.10	45.0	29	2.03	0.09	45.0
	30	1.94	0.09	45.0	31	1.86	0.08	45.0	32	1.82	0.08	45.0
60	1	1.71	0.63	369.0	2	1.60	0.59	369.0	3	1.48	0.55	369.0
	4	1.36	0.50	369.0	5	1.25	0.46	369.0	6	1.16	0.43	369.0
	27	1.73	0.08	45.0	28	1.66	0.07	45.0	29	1.55	0.07	45.0
	30	1.44	0.06	45.0	31	1.35	0.06	45.0	32	1.29	0.06	45.0
61	1	1.75	0.65	369.0	2	1.83	0.67	369.0	3	1.92	0.71	369.0
	4	2.01	0.74	369.0	5	2.11	0.78	369.0	6	2.19	0.81	369.0
	27	1.82	0.08	45.0	28	1.87	0.08	45.0	29	1.94	0.09	45.0
	30	2.03	0.09	45.0	31	2.11	0.10	45.0	32	2.17	0.10	45.0
62	1	1.16	0.43	369.0	2	1.25	0.46	369.0	3	1.37	0.50	369.0
	4	1.48	0.55	369.0	5	1.60	0.59	369.0	6	1.70	0.63	369.0
	27	1.30	0.06	45.0	28	1.36	0.06	45.0	29	1.44	0.07	45.0
	30	1.55	0.07	45.0	31	1.66	0.07	45.0	32	1.72	0.08	45.0
63	1	2.26	0.83	369.0	2	2.16	0.80	369.0	3	2.03	0.75	369.0
	4	1.90	0.70	369.0	5	1.79	0.66	369.0	6	1.69	0.62	369.0
	27	2.23	0.10	45.0	28	2.15	0.10	45.0	29	2.04	0.09	45.0
	30	1.93	0.09	45.0	31	1.83	0.08	45.0	32	1.77	0.08	45.0
64	1	1.64	0.61	369.0	2	1.56	0.58	369.0	3	1.47	0.54	369.0
	4	1.37	0.51	369.0	5	1.28	0.47	369.0	6	1.21	0.45	369.0
	27	1.68	0.08	45.0	28	1.63	0.07	45.0	29	1.54	0.07	45.0
	30	1.45	0.07	45.0	31	1.38	0.06	45.0	32	1.33	0.06	45.0
65	1	1.71	0.63	369.0	2	1.80	0.66	369.0	3	1.91	0.70	369.0
	4	2.03	0.75	369.0	5	2.15	0.79	369.0	6	2.24	0.83	369.0
	27	1.79	0.08	45.0	28	1.85	0.08	45.0	29	1.93	0.09	45.0
	30	2.04	0.09	45.0	31	2.14	0.10	45.0	32	2.21	0.10	45.0
66	1	1.22	0.45	369.0	2	1.29	0.48	369.0	3	1.38	0.51	369.0
	4	1.46	0.54	369.0	5	1.55	0.57	369.0	6	1.63	0.60	369.0
	27	1.34	0.06	45.0	28	1.39	0.06	45.0	29	1.46	0.07	45.0
	30	1.54	0.07	45.0	31	1.62	0.07	45.0	32	1.67	0.08	45.0
67	1	2.19	0.81	369.0	2	2.11	0.78	369.0	3	2.01	0.74	369.0
	4	1.92	0.71	369.0	5	1.82	0.67	369.0	6	1.75	0.65	369.0
	27	2.17	0.10	45.0	28	2.11	0.10	45.0	29	2.02	0.09	45.0
	30	1.94	0.09	45.0	31	1.87	0.08	45.0	32	1.82	0.08	45.0
68	1	1.70	0.63	369.0	2	1.60	0.59	369.0	3	1.48	0.55	369.0
	4	1.36	0.50	369.0	5	1.25	0.46	369.0	6	1.17	0.43	369.0
	27	1.72	0.08	45.0	28	1.66	0.07	45.0	29	1.55	0.07	45.0
	30	1.44	0.07	45.0	31	1.36	0.06	45.0	32	1.30	0.06	45.0
69	1	1.76	0.65	369.0	2	1.83	0.68	369.0	3	1.92	0.71	369.0
	4	2.01	0.74	369.0	5	2.11	0.78	369.0	6	2.18	0.80	369.0

	27	1.83	0.08	45.0	28	1.87	0.08	45.0	29	1.94	0.09	45.0
	30	2.02	0.09	45.0	31	2.11	0.09	45.0	32	2.17	0.10	45.0
70	1	1.17	0.43	369.0	2	1.26	0.46	369.0	3	1.37	0.50	369.0
	4	1.48	0.55	369.0	5	1.59	0.59	369.0	6	1.69	0.62	369.0
	27	1.30	0.06	45.0	28	1.36	0.06	45.0	29	1.45	0.07	45.0
	30	1.55	0.07	45.0	31	1.65	0.07	45.0	32	1.72	0.08	45.0
71	1	2.25	0.83	369.0	2	2.15	0.79	369.0	3	2.03	0.75	369.0
	4	1.91	0.70	369.0	5	1.79	0.66	369.0	6	1.70	0.63	369.0
	27	2.22	0.10	45.0	28	2.15	0.10	45.0	29	2.04	0.09	45.0
	30	1.93	0.09	45.0	31	1.84	0.08	45.0	32	1.78	0.08	45.0
72	1	1.63	0.60	369.0	2	1.55	0.57	369.0	3	1.46	0.54	369.0
	4	1.37	0.51	369.0	5	1.29	0.47	369.0	6	1.22	0.45	369.0
	27	1.67	0.08	45.0	28	1.62	0.07	45.0	29	1.54	0.07	45.0
	30	1.45	0.07	45.0	31	1.38	0.06	45.0	32	1.34	0.06	45.0
73	1	2.44	0.90	369.0	2	2.49	0.92	369.0	3	2.56	0.94	369.0
	4	2.63	0.97	369.0	5	2.71	1.00	369.0	6	2.77	1.02	369.0
	27	2.44	0.11	45.0	28	2.47	0.11	45.0	29	2.52	0.11	45.0
	30	2.58	0.12	45.0	31	2.65	0.12	45.0	32	2.71	0.12	45.0
74	1	0.81	0.30	369.0	2	0.79	0.29	369.0	3	0.77	0.28	369.0
	4	0.75	0.28	369.0	5	0.74	0.27	369.0	6	0.74	0.27	369.0
	27	0.95	0.04	45.0	28	0.94	0.04	45.0	29	0.93	0.04	45.0
	30	0.92	0.04	45.0	31	0.92	0.04	45.0	32	0.92	0.04	45.0
75	1	2.59	0.96	369.0	2	2.59	0.95	369.0	3	2.59	0.95	369.0
	4	2.59	0.96	369.0	5	2.60	0.96	369.0	6	2.62	0.97	369.0
	27	2.56	0.12	45.0	28	2.55	0.11	45.0	29	2.55	0.11	45.0
	30	2.55	0.11	45.0	31	2.56	0.12	45.0	32	2.58	0.12	45.0
76	1	0.96	0.35	369.0	2	0.89	0.33	369.0	3	0.81	0.30	369.0
	4	0.73	0.27	369.0	5	0.66	0.24	369.0	6	0.60	0.22	369.0
	27	1.06	0.05	45.0	28	1.03	0.05	45.0	29	0.96	0.04	45.0
	30	0.89	0.04	45.0	31	0.85	0.04	45.0	32	0.82	0.04	45.0
77	1	2.44	0.90	369.0	2	2.49	0.92	369.0	3	2.56	0.94	369.0
	4	2.63	0.97	369.0	5	2.70	1.00	369.0	6	2.77	1.02	369.0
	27	2.44	0.11	45.0	28	2.47	0.11	45.0	29	2.52	0.11	45.0
	30	2.58	0.12	45.0	31	2.65	0.12	45.0	32	2.71	0.12	45.0
78	1	0.81	0.30	369.0	2	0.79	0.29	369.0	3	0.77	0.28	369.0
	4	0.75	0.28	369.0	5	0.74	0.27	369.0	6	0.74	0.27	369.0
	27	0.95	0.04	45.0	28	0.95	0.04	45.0	29	0.93	0.04	45.0
	30	0.92	0.04	45.0	31	0.92	0.04	45.0	32	0.91	0.04	45.0
79	1	2.59	0.96	369.0	2	2.59	0.95	369.0	3	2.59	0.95	369.0
	4	2.59	0.96	369.0	5	2.61	0.96	369.0	6	2.62	0.97	369.0
	27	2.56	0.12	45.0	28	2.55	0.11	45.0	29	2.55	0.11	45.0
	30	2.55	0.11	45.0	31	2.57	0.12	45.0	32	2.59	0.12	45.0
80	1	0.96	0.35	369.0	2	0.88	0.33	369.0	3	0.80	0.30	369.0
	4	0.73	0.27	369.0	5	0.66	0.24	369.0	6	0.61	0.22	369.0
	27	1.06	0.05	45.0	28	1.03	0.05	45.0	29	0.96	0.04	45.0
	30	0.90	0.04	45.0	31	0.85	0.04	45.0	32	0.82	0.04	45.0
81	1	2.63	0.97	369.0	2	2.61	0.96	369.0	3	2.60	0.96	369.0
	4	2.59	0.95	369.0	5	2.58	0.95	369.0	6	2.59	0.95	369.0
	27	2.59	0.12	45.0	28	2.57	0.12	45.0	29	2.55	0.11	45.0
	30	2.55	0.11	45.0	31	2.55	0.11	45.0	32	2.55	0.11	45.0
82	1	0.61	0.22	369.0	2	0.66	0.24	369.0	3	0.73	0.27	369.0
	4	0.80	0.30	369.0	5	0.88	0.33	369.0	6	0.96	0.35	369.0
	27	0.82	0.04	45.0	28	0.85	0.04	45.0	29	0.90	0.04	45.0
	30	0.96	0.04	45.0	31	1.02	0.05	45.0	32	1.06	0.05	45.0
83	1	2.78	1.03	369.0	2	2.71	1.00	369.0	3	2.63	0.97	369.0
	4	2.55	0.94	369.0	5	2.48	0.92	369.0	6	2.43	0.90	369.0
	27	2.72	0.12	45.0	28	2.66	0.12	45.0	29	2.58	0.12	45.0
	30	2.52	0.11	45.0	31	2.46	0.11	45.0	32	2.43	0.11	45.0
84	1	0.75	0.27	369.0	2	0.74	0.27	369.0	3	0.75	0.28	369.0
	4	0.77	0.28	369.0	5	0.78	0.29	369.0	6	0.81	0.30	369.0
	27	0.92	0.04	45.0	28	0.93	0.04	45.0	29	0.92	0.04	45.0
	30	0.93	0.04	45.0	31	0.94	0.04	45.0	32	0.95	0.04	45.0
85	1	2.63	0.97	369.0	2	2.61	0.96	369.0	3	2.60	0.96	369.0
	4	2.58	0.95	369.0	5	2.58	0.95	369.0	6	2.58	0.95	369.0
	27	2.59	0.12	45.0	28	2.57	0.12	45.0	29	2.55	0.11	45.0
	30	2.55	0.11	45.0	31	2.54	0.11	45.0	32	2.55	0.11	45.0
86	1	0.61	0.22	369.0	2	0.66	0.24	369.0	3	0.73	0.27	369.0
	4	0.80	0.30	369.0	5	0.88	0.33	369.0	6	0.96	0.35	369.0
	27	0.82	0.04	45.0	28	0.85	0.04	45.0	29	0.90	0.04	45.0
	30	0.96	0.04	45.0	31	1.02	0.05	45.0	32	1.06	0.05	45.0
87	1	2.78	1.03	369.0	2	2.71	1.00	369.0	3	2.63	0.97	369.0
	4	2.55	0.94	369.0	5	2.49	0.92	369.0	6	2.43	0.90	369.0
	27	2.72	0.12	45.0	28	2.65	0.12	45.0	29	2.58	0.12	45.0
	30	2.52	0.11	45.0	31	2.46	0.11	45.0	32	2.43	0.11	45.0
88	1	0.74	0.27	369.0	2	0.74	0.27	369.0	3	0.75	0.28	369.0
	4	0.77	0.28	369.0	5	0.79	0.29	369.0	6	0.81	0.30	369.0
	27	0.92	0.04	45.0	28	0.93	0.04	45.0	29	0.92	0.04	45.0
	30	0.93	0.04	45.0	31	0.94	0.04	45.0	32	0.95	0.04	45.0
89	1	1.70	0.63	369.0	2	1.81	0.67	369.0	3	1.94	0.72	369.0

	4	2.09	0.77	369.0	5	2.23	0.82	369.0	6	2.34	0.87	369.0
	27	1.79	0.08	45.0	28	1.86	0.08	45.0	29	1.96	0.09	45.0
	30	2.09	0.09	45.0	31	2.21	0.10	45.0	32	2.30	0.10	45.0
90	1	1.14	0.42	369.0	2	1.22	0.45	369.0	3	1.32	0.49	369.0
	4	1.43	0.53	369.0	5	1.54	0.57	369.0	6	1.63	0.60	369.0
	27	1.27	0.06	45.0	28	1.33	0.06	45.0	29	1.41	0.06	45.0
	30	1.51	0.07	45.0	31	1.61	0.07	45.0	32	1.67	0.07	45.0
91	1	2.28	0.84	369.0	2	2.18	0.81	369.0	3	2.07	0.76	369.0
	4	1.95	0.72	369.0	5	1.84	0.68	369.0	6	1.75	0.65	369.0
	27	2.25	0.10	45.0	28	2.18	0.10	45.0	29	2.07	0.09	45.0
	30	1.97	0.09	45.0	31	1.88	0.08	45.0	32	1.83	0.08	45.0
92	1	1.71	0.63	369.0	2	1.59	0.59	369.0	3	1.45	0.54	369.0
	4	1.31	0.48	369.0	5	1.18	0.44	369.0	6	1.07	0.40	369.0
	27	1.72	0.08	45.0	28	1.65	0.07	45.0	29	1.52	0.07	45.0
	30	1.40	0.06	45.0	31	1.29	0.06	45.0	32	1.22	0.06	45.0
93	1	1.76	0.65	369.0	2	1.85	0.68	369.0	3	1.95	0.72	369.0
	4	2.07	0.76	369.0	5	2.18	0.80	369.0	6	2.27	0.84	369.0
	27	1.84	0.08	45.0	28	1.89	0.09	45.0	29	1.97	0.09	45.0
	30	2.07	0.09	45.0	31	2.18	0.10	45.0	32	2.25	0.10	45.0
94	1	1.08	0.40	369.0	2	1.19	0.44	369.0	3	1.32	0.49	369.0
	4	1.45	0.54	369.0	5	1.59	0.59	369.0	6	1.70	0.63	369.0
	27	1.23	0.06	45.0	28	1.29	0.06	45.0	29	1.40	0.06	45.0
	30	1.52	0.07	45.0	31	1.64	0.07	45.0	32	1.72	0.08	45.0
95	1	2.35	0.87	369.0	2	2.24	0.82	369.0	3	2.09	0.77	369.0
	4	1.94	0.72	369.0	5	1.80	0.67	369.0	6	1.69	0.62	369.0
	27	2.31	0.10	45.0	28	2.22	0.10	45.0	29	2.09	0.09	45.0
	30	1.96	0.09	45.0	31	1.85	0.08	45.0	32	1.78	0.08	45.0
96	1	1.63	0.60	369.0	2	1.54	0.57	369.0	3	1.43	0.53	369.0
	4	1.32	0.49	369.0	5	1.22	0.45	369.0	6	1.13	0.42	369.0
	27	1.67	0.08	45.0	28	1.61	0.07	45.0	29	1.51	0.07	45.0
	30	1.41	0.06	45.0	31	1.32	0.06	45.0	32	1.27	0.06	45.0
97	1	1.71	0.63	369.0	2	1.81	0.67	369.0	3	1.95	0.72	369.0
	4	2.08	0.77	369.0	5	2.22	0.82	369.0	6	2.33	0.86	369.0
	27	1.79	0.08	45.0	28	1.86	0.08	45.0	29	1.97	0.09	45.0
	30	2.08	0.09	45.0	31	2.21	0.10	45.0	32	2.29	0.10	45.0
98	1	1.15	0.42	369.0	2	1.23	0.45	369.0	3	1.33	0.49	369.0
	4	1.43	0.53	369.0	5	1.53	0.56	369.0	6	1.62	0.60	369.0
	27	1.28	0.06	45.0	28	1.33	0.06	45.0	29	1.41	0.06	45.0
	30	1.51	0.07	45.0	31	1.60	0.07	45.0	32	1.66	0.07	45.0
99	1	2.27	0.84	369.0	2	2.18	0.80	369.0	3	2.07	0.76	369.0
	4	1.95	0.72	369.0	5	1.85	0.68	369.0	6	1.76	0.65	369.0
	27	2.24	0.10	45.0	28	2.17	0.10	45.0	29	2.07	0.09	45.0
	30	1.97	0.09	45.0	31	1.89	0.09	45.0	32	1.84	0.08	45.0
100	1	1.70	0.63	369.0	2	1.58	0.58	369.0	3	1.45	0.53	369.0
	4	1.31	0.49	369.0	5	1.19	0.44	369.0	6	1.08	0.40	369.0
	27	1.72	0.08	45.0	28	1.64	0.07	45.0	29	1.52	0.07	45.0
	30	1.40	0.06	45.0	31	1.29	0.06	45.0	32	1.23	0.06	45.0
101	1	1.77	0.65	369.0	2	1.85	0.68	369.0	3	1.96	0.72	369.0
	4	2.07	0.76	369.0	5	2.17	0.80	369.0	6	2.26	0.83	369.0
	27	1.84	0.08	45.0	28	1.90	0.09	45.0	29	1.98	0.09	45.0
	30	2.07	0.09	45.0	31	2.17	0.10	45.0	32	2.24	0.10	45.0
102	1	1.09	0.40	369.0	2	1.19	0.44	369.0	3	1.32	0.49	369.0
	4	1.45	0.53	369.0	5	1.58	0.58	369.0	6	1.69	0.62	369.0
	27	1.23	0.06	45.0	28	1.30	0.06	45.0	29	1.40	0.06	45.0
	30	1.52	0.07	45.0	31	1.64	0.07	45.0	32	1.71	0.08	45.0
103	1	2.34	0.86	369.0	2	2.23	0.82	369.0	3	2.08	0.77	369.0
	4	1.94	0.72	369.0	5	1.81	0.67	369.0	6	1.70	0.63	369.0
	27	2.30	0.10	45.0	28	2.21	0.10	45.0	29	2.09	0.09	45.0
	30	1.96	0.09	45.0	31	1.86	0.08	45.0	32	1.79	0.08	45.0
104	1	1.62	0.60	369.0	2	1.53	0.57	369.0	3	1.43	0.53	369.0
	4	1.32	0.49	369.0	5	1.22	0.45	369.0	6	1.14	0.42	369.0
	27	1.66	0.07	45.0	28	1.61	0.07	45.0	29	1.51	0.07	45.0
	30	1.41	0.06	45.0	31	1.33	0.06	45.0	32	1.27	0.06	45.0
105	1	2.56	0.94	369.0	2	2.62	0.97	369.0	3	2.70	1.00	369.0
	4	2.78	1.03	369.0	5	2.87	1.06	369.0	6	2.95	1.09	369.0
	27	2.55	0.11	45.0	28	2.59	0.12	45.0	29	2.65	0.12	45.0
	30	2.72	0.12	45.0	31	2.80	0.13	45.0	32	2.87	0.13	45.0
106	1	0.67	0.25	369.0	2	0.64	0.24	369.0	3	0.62	0.23	369.0
	4	0.60	0.22	369.0	5	0.59	0.22	369.0	6	0.59	0.22	369.0
	27	0.82	0.04	45.0	28	0.81	0.04	45.0	29	0.80	0.04	45.0
	30	0.79	0.04	45.0	31	0.79	0.04	45.0	32	0.79	0.04	45.0
107	1	2.74	1.01	369.0	2	2.73	1.01	369.0	3	2.73	1.01	369.0
	4	2.74	1.01	369.0	5	2.75	1.02	369.0	6	2.76	1.02	369.0
	27	2.70	0.12	45.0	28	2.68	0.12	45.0	29	2.68	0.12	45.0
	30	2.68	0.12	45.0	31	2.70	0.12	45.0	32	2.72	0.12	45.0
108	1	0.84	0.31	369.0	2	0.76	0.28	369.0	3	0.66	0.25	369.0
	4	0.58	0.21	369.0	5	0.49	0.18	369.0	6	0.43	0.16	369.0
	27	0.95	0.04	45.0	28	0.91	0.04	45.0	29	0.83	0.04	45.0
	30	0.76	0.03	45.0	31	0.70	0.03	45.0	32	0.68	0.03	45.0

109	1	2.56	0.95	369.0	2	2.62	0.97	369.0	3	2.70	1.00	369.0
	4	2.78	1.03	369.0	5	2.87	1.06	369.0	6	2.95	1.09	369.0
	27	2.56	0.12	45.0	28	2.59	0.12	45.0	29	2.65	0.12	45.0
	30	2.72	0.12	45.0	31	2.80	0.13	45.0	32	2.86	0.13	45.0
110	1	0.67	0.25	369.0	2	0.64	0.24	369.0	3	0.62	0.23	369.0
	4	0.60	0.22	369.0	5	0.59	0.22	369.0	6	0.58	0.21	369.0
	27	0.82	0.04	45.0	28	0.82	0.04	45.0	29	0.80	0.04	45.0
	30	0.79	0.04	45.0	31	0.78	0.04	45.0	32	0.77	0.03	45.0
111	1	2.74	1.01	369.0	2	2.73	1.01	369.0	3	2.73	1.01	369.0
	4	2.74	1.01	369.0	5	2.75	1.02	369.0	6	2.77	1.02	369.0
	27	2.69	0.12	45.0	28	2.68	0.12	45.0	29	2.68	0.12	45.0
	30	2.69	0.12	45.0	31	2.70	0.12	45.0	32	2.72	0.12	45.0
112	1	0.84	0.31	369.0	2	0.76	0.28	369.0	3	0.66	0.24	369.0
	4	0.58	0.21	369.0	5	0.49	0.18	369.0	6	0.43	0.16	369.0
	27	0.95	0.04	45.0	28	0.91	0.04	45.0	29	0.83	0.04	45.0
	30	0.76	0.03	45.0	31	0.70	0.03	45.0	32	0.69	0.03	45.0
113	1	2.77	1.02	369.0	2	2.76	1.02	369.0	3	2.74	1.01	369.0
	4	2.73	1.01	369.0	5	2.73	1.01	369.0	6	2.73	1.01	369.0
	27	2.73	0.12	45.0	28	2.71	0.12	45.0	29	2.69	0.12	45.0
	30	2.68	0.12	45.0	31	2.68	0.12	45.0	32	2.68	0.12	45.0
114	1	0.43	0.16	369.0	2	0.49	0.18	369.0	3	0.58	0.21	369.0
	4	0.66	0.24	369.0	5	0.76	0.28	369.0	6	0.84	0.31	369.0
	27	0.69	0.03	45.0	28	0.71	0.03	45.0	29	0.76	0.03	45.0
	30	0.83	0.04	45.0	31	0.91	0.04	45.0	32	0.94	0.04	45.0
115	1	2.96	1.09	369.0	2	2.88	1.06	369.0	3	2.79	1.03	369.0
	4	2.70	0.99	369.0	5	2.61	0.96	369.0	6	2.55	0.94	369.0
	27	2.88	0.13	45.0	28	2.80	0.13	45.0	29	2.72	0.12	45.0
	30	2.64	0.12	45.0	31	2.58	0.12	45.0	32	2.54	0.11	45.0
116	1	0.59	0.22	369.0	2	0.59	0.22	369.0	3	0.60	0.22	369.0
	4	0.61	0.23	369.0	5	0.64	0.23	369.0	6	0.66	0.24	369.0
	27	0.79	0.04	45.0	28	0.79	0.04	45.0	29	0.79	0.04	45.0
	30	0.80	0.04	45.0	31	0.81	0.04	45.0	32	0.82	0.04	45.0
117	1	2.78	1.02	369.0	2	2.76	1.02	369.0	3	2.74	1.01	369.0
	4	2.73	1.01	369.0	5	2.73	1.01	369.0	6	2.73	1.01	369.0
	27	2.73	0.12	45.0	28	2.71	0.12	45.0	29	2.69	0.12	45.0
	30	2.68	0.12	45.0	31	2.68	0.12	45.0	32	2.68	0.12	45.0
118	1	0.43	0.16	369.0	2	0.49	0.18	369.0	3	0.58	0.21	369.0
	4	0.66	0.24	369.0	5	0.75	0.28	369.0	6	0.84	0.31	369.0
	27	0.69	0.03	45.0	28	0.71	0.03	45.0	29	0.76	0.03	45.0
	30	0.83	0.04	45.0	31	0.91	0.04	45.0	32	0.94	0.04	45.0
119	1	2.96	1.09	369.0	2	2.88	1.06	369.0	3	2.78	1.03	369.0
	4	2.70	0.99	369.0	5	2.62	0.97	369.0	6	2.55	0.94	369.0
	27	2.87	0.13	45.0	28	2.80	0.13	45.0	29	2.72	0.12	45.0
	30	2.65	0.12	45.0	31	2.58	0.12	45.0	32	2.55	0.11	45.0
120	1	0.59	0.22	369.0	2	0.59	0.22	369.0	3	0.60	0.22	369.0
	4	0.62	0.23	369.0	5	0.64	0.24	369.0	6	0.67	0.25	369.0
	27	0.79	0.04	45.0	28	0.79	0.04	45.0	29	0.79	0.04	45.0
	30	0.80	0.04	45.0	31	0.81	0.04	45.0	32	0.82	0.04	45.0

Cmb	**1000 etaT/h**
	2.96

RISULTATI ELEMENTI TIPO TRAVE

LEGENDA RISULTATI ELEMENTI TIPO TRAVE

Il controllo dei risultati delle analisi condotte, per quanto concerne gli elementi tipo trave, è possibile in relazione alle tabelle sotto riportate.

Gli elementi vengono suddivisi in relazione alle proprietà in elementi:

- tipo **pilastro**
- tipo **trave in elevazione**
- tipo **trave in fondazione**

Per ogni elemento e per ogni combinazione (o caso di carico) vengono riportati i risultati più significativi.

Per gli elementi tipo *pilastro* sono riportati in tabella i seguenti valori:

Pilas.	numero dell'elemento pilastro
Cmb	combinazione in cui si verificano i valori riportati
M3 mx/mn	momento flettente in campata M3 max (prima riga) / min (seconda riga)
M2 mx/mn	momento flettente in campata M2 max (prima riga) / min (seconda riga)
D2/D3	freccia massima in direzione 2 (prima riga) / direzione 3 (seconda riga)
Q2/Q3	carico totale in direzione 2 (prima riga) / direzione 3 (seconda riga)
Pos.	ascissa del punto iniziale e finale dell'elemento
N, V2, ecc..	sei componenti di sollecitazione al piede ed in sommità dell'elemento

Per gli elementi tipo *trave in elevazione* sono riportati, oltre al numero dell'elemento, i medesimi risultati visti per i pilastri.

Per gli elementi tipo *trave in fondazione* (trave f.) sono riportati, oltre al numero dell'elemento, i medesimi risultati visti per i pilastri e la massima pressione sul terreno.

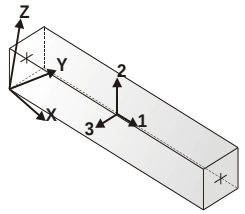

orientamento elementi 2D non verticali

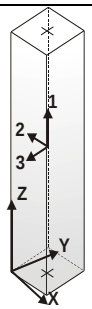

orientamento elementi 2D verticali

Pilas.	CDC	M3 mx/mn	M2 mx/mn	D 2 / D 3	Q 2 / Q 3	Pos.	N	V 2	V 3	T	M 2	M 3
		kN m	kN m	m	kN	cm	kN	kN	kN	kN m	kN m	kN m
1	1	1.99	-0.11	2.01e-04	0.0	0.0	-29.08	-1.75	0.06	0.04	-0.32	1.99
		-4.47	-0.32	-5.56e-03	0.0	369.0	-20.77	-1.75	0.06	0.04	-0.11	-4.47
1	5	2.23e-03	9.69e-03	0.0	0.0	0.0	0.03	1.65e-03	2.95e-04	-1.72e-05	8.60e-03	-3.84e-03
		-3.84e-03	8.60e-03	7.58e-04	0.0	369.0	0.03	1.65e-03	2.95e-04	-1.72e-05	9.69e-03	2.23e-03
1	17	4.80	1.28	8.94e-04	0.0	0.0	-1.72	-2.12	0.86	-0.44	-1.91	4.80
		-3.04	-1.91	-1.42e-03	0.0	369.0	-1.72	-2.12	0.86	-0.44	1.28	-3.04
1	20	0.72	7.29	-2.82e-04	0.0	0.0	-9.33	0.70	-3.25	0.19	7.29	-1.96
		-1.96	-4.71	5.46e-03	0.0	369.0	-9.33	0.70	-3.25	0.19	-4.71	0.72
2	1	1.17	0.21	7.93e-05	0.0	0.0	-55.84	-0.82	-0.22	-5.36e-03	0.21	1.17
		-1.84	-0.61	-5.52e-03	0.0	369.0	-47.53	-0.82	-0.22	-5.36e-03	-0.61	-1.84
2	5	3.63e-04	9.46e-03	0.0	0.0	0.0	0.04	8.78e-05	1.63e-04	-1.94e-06	8.86e-03	3.91e-05
		3.91e-05	8.86e-03	7.58e-04	0.0	369.0	0.04	8.78e-05	1.63e-04	-1.94e-06	9.46e-03	3.63e-04
2	17	6.18	0.54	9.11e-04	0.0	0.0	-1.71	-2.78	0.33	-0.43	-0.69	6.18
		-4.10	-0.69	-9.11e-04	0.0	369.0	-1.71	-2.78	0.33	-0.43	0.54	-4.10
2	20	1.34	7.37	-3.04e-04	0.0	0.0	-16.63	0.97	-3.38	0.18	7.37	-2.26
		-2.26	-5.09	5.30e-03	0.0	369.0	-16.63	0.97	-3.38	0.18	-5.09	1.34
3	1	0.24	0.25	1.89e-05	0.0	0.0	-58.44	-0.13	-0.24	-0.01	0.25	0.24
		-0.23	-0.62	-5.50e-03	0.0	369.0	-50.14	-0.13	-0.24	-0.01	-0.62	-0.23
3	5	2.27e-05	9.66e-03	0.0	0.0	0.0	0.04	1.19e-05	3.14e-04	1.63e-06	8.50e-03	-2.12e-05
		-2.12e-05	8.50e-03	7.58e-04	0.0	369.0	0.04	1.19e-05	3.14e-04	1.63e-06	9.66e-03	2.27e-05
3	17	6.62	-0.18	9.25e-04	0.0	0.0	-0.47	-2.99	0.11	-0.45	-0.23	6.62
		-4.40	-0.23	-3.04e-04	0.0	369.0	-0.47	-2.99	0.11	-0.45	-0.18	-4.40
3	20	1.62	7.07	-3.16e-04	0.0	0.0	-16.52	1.12	-3.23	0.18	7.07	-2.50
		-2.50	-4.87	5.08e-03	0.0	369.0	-16.52	1.12	-3.23	0.18	-4.87	1.62
4	1	0.17	0.24	5.50e-06	0.0	0.0	-58.42	0.08	-0.23	1.70e-03	0.24	-0.12
		-0.12	-0.62	-5.49e-03	0.0	369.0	-50.12	0.08	-0.23	1.70e-03	-0.62	0.17
4	17	6.63	0.24	9.25e-04	0.0	0.0	0.51	-2.99	-0.12	-0.45	0.24	6.63
		-4.40	0.19	3.11e-04	0.0	369.0	0.51	-2.99	-0.12	-0.45	0.19	-4.40
4	18	6.41	0.19	8.93e-04	0.0	0.0	0.57	-2.89	0.12	-0.44	-0.24	6.41
		-4.25	-0.24	3.02e-04	0.0	369.0	0.57	-2.89	0.12	-0.44	0.19	-4.25
4	19	2.42	7.07	3.05e-04	0.0	0.0	-16.52	-1.08	-3.23	-0.18	7.07	2.42
		-1.57	-4.87	5.08e-03	0.0	369.0	-16.52	-1.08	-3.23	-0.18	-4.87	-1.57
5	1	1.77	0.17	-6.14e-05	0.0	0.0	-55.77	0.77	-0.21	-3.46e-03	0.17	-1.05

		-1.05	-0.59	-5.51e-03	0.0	369.0	-47.47	0.77	-0.21	-3.46e-03	-0.59	1.77
5	17	6.18	0.70	9.12e-04	0.0	0.0	1.74	-2.79	-0.34	-0.43	0.70	6.18
		-4.10	-0.55	9.18e-04	0.0	369.0	1.74	-2.79	-0.34	-0.43	-0.55	-4.10
5	18	5.98	0.55	8.81e-04	0.0	0.0	1.92	-2.69	0.34	-0.42	-0.71	5.98
		-3.97	-0.71	8.89e-04	0.0	369.0	1.92	-2.69	0.34	-0.42	0.55	-3.97
5	19	2.19	7.37	2.93e-04	0.0	0.0	-16.62	-0.94	-3.37	-0.17	7.37	2.19
		-1.29	-5.08	5.29e-03	0.0	369.0	-16.62	-0.94	-3.37	-0.17	-5.08	-1.29
6	1	4.41	-0.10	-1.83e-04	0.0	0.0	-29.01	1.71	0.06	-0.05	-0.34	-1.89
		-1.89	-0.34	-5.54e-03	0.0	369.0	-20.71	1.71	0.06	-0.05	-0.10	4.41
6	17	4.80	1.92	8.94e-04	0.0	0.0	1.72	-2.12	-0.87	-0.44	1.92	4.80
		-3.04	-1.29	1.43e-03	0.0	369.0	1.72	-2.12	-0.87	-0.44	-1.29	-3.04
6	18	4.64	1.87	8.63e-04	0.0	0.0	1.86	-2.06	-0.85	-0.43	1.87	4.64
		-2.94	-1.26	1.38e-03	0.0	369.0	1.86	-2.06	-0.85	-0.43	-1.26	-2.94
6	19	1.90	7.26	2.72e-04	0.0	0.0	-9.33	-0.67	-3.24	-0.18	7.26	1.90
		-0.70	-4.70	5.45e-03	0.0	369.0	-9.33	-0.67	-3.24	-0.18	-4.70	-0.70
27	1	-1.05	-0.08	-9.55e-05	0.0	0.0	-15.58	7.60	0.06	0.04	-0.11	-4.47
		-4.47	-0.11	-6.86e-04	0.0	45.0	-14.56	7.60	0.06	0.04	-0.08	-1.05
27	5	3.13e-03	9.82e-03	0.0	0.0	0.0	0.03	2.01e-03	2.95e-04	-1.66e-05	9.69e-03	2.23e-03
		2.23e-03	9.69e-03	9.29e-05	0.0	45.0	0.03	2.01e-03	2.95e-04	-1.66e-05	9.82e-03	3.13e-03
27	17	-3.04	1.31	7.94e-05	0.0	0.0	-1.40	0.96	0.69	-0.44	1.31	-3.04
		-3.30	1.06	-1.45e-04	0.0	45.0	-1.40	0.96	0.69	-0.44	1.06	-3.30
27	20	0.92	-4.88	-4.22e-05	0.0	0.0	-8.08	-1.12	-0.62	0.16	-4.88	0.72
		0.72	-5.14	6.14e-04	0.0	45.0	-8.08	-1.12	-0.62	0.16	-5.14	0.92
28	1	1.18	-0.63	-3.31e-05	0.0	0.0	-35.33	6.72	-0.22	-5.00e-03	-0.63	-1.84
		-1.84	-0.73	-6.90e-04	0.0	45.0	-34.32	6.72	-0.22	-5.00e-03	-0.73	1.18
28	5	4.24e-04	9.53e-03	0.0	0.0	0.0	0.04	1.36e-04	1.62e-04	-1.20e-06	9.46e-03	3.63e-04
		3.63e-04	9.46e-03	9.29e-05	0.0	45.0	0.04	1.36e-04	1.62e-04	-1.20e-06	9.53e-03	4.24e-04
28	17	-4.10	-0.21	6.69e-05	0.0	0.0	-1.43	2.10	1.69	-0.47	-0.85	-4.10
		-4.87	-0.85	-9.64e-05	0.0	45.0	-1.43	2.10	1.69	-0.47	-0.21	-4.87
28	20	2.17	-5.24	-2.46e-05	0.0	0.0	-14.51	2.01	1.58	0.17	-5.73	1.34
		1.34	-5.73	5.82e-04	0.0	45.0	-14.51	2.01	1.58	0.17	-5.24	2.17
29	1	0.10	-0.62	-1.67e-06	0.0	0.0	-36.13	0.74	-0.24	-0.01	-0.62	-0.23
		-0.23	-0.72	-6.87e-04	0.0	45.0	-35.12	0.74	-0.24	-0.01	-0.72	0.10
29	5	2.27e-05	9.80e-03	0.0	0.0	0.0	0.04	-3.02e-04	3.14e-04	1.71e-06	9.66e-03	2.27e-05
		-1.13e-04	9.66e-03	9.29e-05	0.0	45.0	0.04	-3.02e-04	3.14e-04	1.71e-06	9.80e-03	-1.13e-04
29	17	-4.40	-0.06	6.55e-05	0.0	0.0	-0.40	2.15	0.83	-0.53	-0.37	-4.40
		-5.12	-0.37	-3.24e-05	0.0	45.0	-0.40	2.15	0.83	-0.53	-0.06	-5.12
29	20	2.11	-5.04	-2.06e-05	0.0	0.0	-14.25	1.11	1.99	0.22	-5.58	1.62
		1.62	-5.58	5.58e-04	0.0	45.0	-14.25	1.11	1.99	0.22	-5.04	2.11
30	1	0.17	-0.61	4.05e-06	0.0	0.0	-36.11	-0.79	-0.23	1.94e-03	-0.61	0.17
		-0.19	-0.71	-6.86e-04	0.0	45.0	-35.10	-0.79	-0.23	1.94e-03	-0.71	-0.19
30	17	-4.40	0.38	6.55e-05	0.0	0.0	0.42	2.15	-0.85	-0.53	0.38	-4.40
		-5.12	0.05	3.31e-05	0.0	45.0	0.42	2.15	-0.85	-0.53	0.05	-5.12
30	18	-4.25	0.38	6.34e-05	0.0	0.0	0.47	2.12	0.83	-0.51	0.38	-4.25
		-4.95	0.06	3.20e-05	0.0	45.0	0.47	2.12	0.83	-0.51	0.06	-4.95
30	19	-1.57	-5.04	1.98e-05	0.0	0.0	-14.26	-1.08	1.98	-0.21	-5.58	-1.57
		-2.04	-5.58	5.58e-04	0.0	45.0	-14.26	-1.08	1.98	-0.21	-5.04	-2.04
30	20	2.05	-4.88	-2.03e-05	0.0	0.0	-13.87	0.92	1.06	0.21	-5.17	1.65
		1.65	-5.17	5.34e-04	0.0	45.0	-13.87	0.92	1.06	0.21	-4.88	2.05
31	1	1.77	-0.61	3.54e-05	0.0	0.0	-35.27	-6.78	-0.21	-4.79e-03	-0.61	1.77
		-1.28	-0.70	-6.88e-04	0.0	45.0	-34.25	-6.78	-0.21	-4.79e-03	-0.70	-1.28
31	17	-4.10	0.86	6.69e-05	0.0	0.0	1.45	2.10	-1.70	-0.47	0.86	-4.10
		-4.88	0.21	9.72e-05	0.0	45.0	1.45	2.10	-1.70	-0.47	0.21	-4.88
31	18	-3.97	0.86	6.47e-05	0.0	0.0	1.60	2.06	1.67	-0.46	0.86	-3.97
		-4.71	0.23	9.39e-05	0.0	45.0	1.60	2.06	1.67	-0.46	0.23	-4.71
31	19	-1.29	-5.24	2.38e-05	0.0	0.0	-14.50	-1.98	1.56	-0.16	-5.72	-1.29
		-2.11	-5.72	5.81e-04	0.0	45.0	-14.50	-1.98	1.56	-0.16	-5.24	-2.11
31	20	1.81	-4.68	-1.69e-05	0.0	0.0	-13.22	0.75	-0.28	0.21	-4.68	1.73
		1.73	-4.74	5.11e-04	0.0	45.0	-13.22	0.75	-0.28	0.21	-4.74	1.81
32	1	4.41	-0.06	9.80e-05	0.0	0.0	-15.51	-7.63	0.06	-0.05	-0.09	4.41
		0.98	-0.09	-6.83e-04	0.0	45.0	-14.50	-7.63	0.06	-0.05	-0.06	0.98
32	5	-2.23e-03	9.82e-03	0.0	0.0	0.0	0.03	-2.01e-03	2.92e-04	1.63e-05	9.69e-03	-2.23e-03
		-3.14e-03	9.69e-03	9.29e-05	0.0	45.0	0.03	-2.01e-03	2.92e-04	1.63e-05	9.82e-03	-3.14e-03
32	17	-3.04	-1.06	7.95e-05	0.0	0.0	1.40	0.96	-0.69	-0.44	-1.31	-3.04
		-3.30	-1.31	1.45e-04	0.0	45.0	1.40	0.96	-0.69	-0.44	-1.06	-3.30
32	18	-2.94	-1.04	7.68e-05	0.0	0.0	1.50	0.96	-0.68	-0.42	-1.29	-2.94
		-3.19	-1.29	1.40e-04	0.0	45.0	1.50	0.96	-0.68	-0.42	-1.04	-3.19
32	19	-0.70	-4.87	4.13e-05	0.0	0.0	-8.08	1.11	-0.62	-0.15	-4.87	-0.70
		-0.88	-5.13	6.12e-04	0.0	45.0	-8.08	1.11	-0.62	-0.15	-5.13	-0.88

Pilas.		**M3 mx/mn**	**M2 mx/mn**	**D 2 / D 3**	**Q 2 / Q 3**		**N**	**V 2**	**V 3**	**T**
		-5.12	-5.73	-5.56e-03	0.0		-58.44	-7.63	-3.38	-0.53
		6.63	7.37	5.46e-03	0.0		1.92	7.60	1.99	0.22

Trave	**CDC**	**M3 mx/mn**	**M2 mx/mn**	**D 2 / D 3**	**Q 2 / Q 3**	**Pos.**	**N**	**V 2**	**V 3**	**T**	**M 2**	**M 3**
		kN m	kN m	m	kN	cm	kN	kN	kN	kN m	kN m	kN m
7	1	1.47	0.0	-9.77e-05	-1.92	0.0	-10.11	3.50	-6.17e-04	-8.10e-03	0.0	0.0
		0.0	-3.56e-04	-1.48e-04	0.0	57.7	-9.77	1.58	-6.17e-04	-8.10e-03	-3.56e-04	1.47

7	17	0.0	0.43	0.0	0.0	0.0	-1.13	-0.23	0.75	0.08	0.0	0.0
		-0.13	0.0	-1.66e-04	0.0	57.7	-1.13	-0.23	0.75	0.08	0.43	-0.13
7	18	0.0	0.43	1.10e-06	0.0	0.0	-1.11	-0.23	0.74	0.08	0.0	0.0
		-0.13	0.0	-1.64e-04	0.0	57.7	-1.11	-0.23	0.74	0.08	0.43	-0.13
7	19	0.20	0.0	-9.72e-06	0.0	0.0	1.32	0.34	-0.61	0.14	0.0	0.0
		0.0	-0.35	3.27e-04	0.0	57.7	1.32	0.34	-0.61	0.14	-0.35	0.20
7	20	0.28	0.0	-1.50e-05	0.0	0.0	1.08	0.48	-1.28	0.18	0.0	0.0
		0.0	-0.74	4.99e-04	0.0	57.7	1.08	0.48	-1.28	0.18	-0.74	0.28
8	1	1.47	3.56e-04	8.33e-05	-1.92	0.0	-9.77	-1.58	-6.17e-04	-8.10e-03	3.56e-04	1.47
		0.0	0.0	1.56e-04	0.0	57.7	-10.11	-3.50	-6.17e-04	-8.10e-03	0.0	0.0
8	17	0.0	0.0	-1.51e-05	0.0	0.0	0.48	0.14	0.67	0.25	-0.39	-0.08
		-0.08	-0.39	2.82e-04	0.0	57.7	0.48	0.14	0.67	0.25	0.0	0.0
8	19	0.20	0.0	6.77e-06	0.0	0.0	1.29	-0.34	0.65	-0.10	-0.37	0.20
		0.0	-0.37	-2.77e-04	0.0	57.7	1.29	-0.34	0.65	-0.10	0.0	0.0
8	20	0.27	0.0	2.94e-05	0.0	0.0	1.15	-0.46	1.22	-0.31	-0.71	0.27
		0.0	-0.71	-5.39e-04	0.0	57.7	1.15	-0.46	1.22	-0.31	0.0	0.0
9	1	1.74	2.21e-04	-7.09e-05	-1.92	0.0	-17.84	3.97	3.82e-04	6.01e-03	0.0	0.0
		0.0	0.0	-1.50e-04	0.0	57.7	-17.50	2.05	3.82e-04	6.01e-03	2.21e-04	1.74
9	17	0.0	0.49	-5.27e-06	0.0	0.0	-0.94	-0.17	0.84	0.14	0.0	0.0
		-0.10	0.0	-2.17e-04	0.0	57.7	-0.94	-0.17	0.84	0.14	0.49	-0.10
9	19	0.23	0.0	-1.47e-05	0.0	0.0	2.50	0.39	-1.15	0.32	0.0	0.0
		0.0	-0.66	5.86e-04	0.0	57.7	2.50	0.39	-1.15	0.32	-0.66	0.23
9	20	0.28	0.0	-1.63e-06	0.0	0.0	2.36	0.48	-2.05	0.44	0.0	0.0
		0.0	-1.18	7.99e-04	0.0	57.7	2.36	0.48	-2.05	0.44	-1.18	0.28
10	1	1.74	0.0	6.30e-05	-1.92	0.0	-17.50	-2.05	3.82e-04	6.01e-03	-2.21e-04	1.74
		0.0	-2.21e-04	1.54e-04	0.0	57.7	-17.84	-3.97	3.82e-04	6.01e-03	0.0	0.0
10	5	0.0	0.0	0.0	0.0	0.0	-4.07e-04	7.16e-05	0.0	0.0	0.0	-4.14e-05
		-4.14e-05	0.0	-2.06e-05	0.0	57.7	-4.07e-04	7.16e-05	0.0	0.0	0.0	0.0
10	20	0.27	0.0	2.30e-05	0.0	0.0	2.45	-0.46	1.95	-0.53	-1.13	0.27
		0.0	-1.13	-8.40e-04	0.0	57.7	2.45	-0.46	1.95	-0.53	0.0	0.0
11	1	1.65	5.32e-05	-4.80e-05	-1.92	0.0	-18.69	3.82	9.21e-05	1.45e-03	0.0	0.0
		0.0	0.0	-1.51e-04	0.0	57.7	-18.36	1.90	9.21e-05	1.45e-03	5.32e-05	1.65
11	17	0.0	0.04	-1.51e-05	0.0	0.0	-0.73	-0.07	0.07	0.15	0.0	0.0
		-0.04	0.0	5.89e-05	0.0	57.7	-0.73	-0.07	0.07	0.15	0.04	-0.04
11	18	0.0	0.04	-1.54e-05	0.0	0.0	-0.72	-0.07	0.07	0.15	0.0	0.0
		-0.04	0.0	5.70e-05	0.0	57.7	-0.72	-0.07	0.07	0.15	0.04	-0.04
11	19	0.23	0.0	-1.74e-05	0.0	0.0	2.63	0.41	-1.49	0.41	0.0	0.0
		0.0	-0.86	7.03e-04	0.0	57.7	2.63	0.41	-1.49	0.41	-0.86	0.23
11	20	0.25	0.0	6.17e-06	0.0	0.0	2.55	0.42	-1.58	0.31	0.0	0.0
		0.0	-0.91	6.59e-04	0.0	57.7	2.55	0.42	-1.58	0.31	-0.91	0.25
12	1	1.65	0.0	4.89e-05	-1.92	0.0	-18.36	-1.90	9.21e-05	1.45e-03	-5.32e-05	1.65
		0.0	-5.32e-05	1.52e-04	0.0	57.7	-18.69	-3.82	9.21e-05	1.45e-03	0.0	0.0
12	3	7.01e-03	0.0	1.50e-06	0.0	0.0	0.07	-0.01	0.0	-1.56e-05	0.0	7.01e-03
		0.0	0.0	3.30e-05	0.0	57.7	0.07	-0.01	0.0	-1.56e-05	0.0	0.0
12	5	0.0	0.0	0.0	0.0	0.0	-9.80e-05	1.72e-05	0.0	0.0	0.0	-9.95e-06
		-9.95e-06	0.0	-2.06e-05	0.0	57.7	-9.80e-05	1.72e-05	0.0	0.0	0.0	0.0
12	19	0.25	0.0	-5.89e-06	0.0	0.0	2.55	-0.42	1.58	-0.31	-0.91	0.25
		0.0	-0.91	-6.60e-04	0.0	57.7	2.55	-0.42	1.58	-0.31	0.0	0.0
12	20	0.23	0.0	1.77e-05	0.0	0.0	2.63	-0.41	1.49	-0.41	-0.86	0.23
		0.0	-0.86	-7.03e-04	0.0	57.7	2.63	-0.41	1.49	-0.41	0.0	0.0
13	1	1.74	0.0	-6.23e-05	-1.92	0.0	-17.84	3.97	-1.81e-04	-2.86e-03	0.0	0.0
		0.0	-1.05e-04	-1.53e-04	0.0	57.7	-17.50	2.05	-1.81e-04	-2.86e-03	-1.05e-04	1.74
13	17	0.0	0.43	-2.09e-05	0.0	0.0	-0.63	-0.07	0.74	0.32	0.0	0.0
		-0.04	0.0	3.49e-04	0.0	57.7	-0.63	-0.07	0.74	0.32	0.43	-0.04
13	19	0.27	0.0	-2.27e-05	0.0	0.0	2.45	0.46	-1.95	0.53	0.0	0.0
		0.0	-1.12	8.39e-04	0.0	57.7	2.45	0.46	-1.95	0.53	-1.12	0.27
14	1	1.74	1.05e-04	7.15e-05	-1.92	0.0	-17.50	-2.05	-1.81e-04	-2.86e-03	1.05e-04	1.74
		0.0	0.0	1.51e-04	0.0	57.7	-17.84	-3.97	-1.81e-04	-2.86e-03	0.0	0.0
14	5	0.0	0.0	0.0	0.0	0.0	-4.05e-04	7.13e-05	0.0	0.0	0.0	-4.12e-05
		-4.12e-05	0.0	-2.06e-05	0.0	57.7	-4.05e-04	7.13e-05	0.0	0.0	0.0	0.0
14	19	0.28	0.0	1.68e-06	0.0	0.0	2.36	-0.48	2.04	-0.44	-1.18	0.28
		0.0	-1.18	-7.98e-04	0.0	57.7	2.36	-0.48	2.04	-0.44	0.0	0.0
14	20	0.23	0.0	1.47e-05	0.0	0.0	2.50	-0.39	1.15	-0.33	-0.66	0.23
		0.0	-0.66	-5.85e-04	0.0	57.7	2.50	-0.39	1.15	-0.33	0.0	0.0
15	1	1.47	4.64e-04	-8.26e-05	-1.92	0.0	-10.10	3.50	8.04e-04	0.01	0.0	0.0
		0.0	0.0	-1.55e-04	0.0	57.7	-9.76	1.58	8.04e-04	0.01	4.64e-04	1.47
15	5	0.0	0.0	0.0	0.0	0.0	-3.59e-04	-6.31e-05	0.0	4.15e-06	0.0	0.0
		-3.65e-05	0.0	2.06e-05	0.0	57.7	-3.59e-04	-6.31e-05	0.0	4.15e-06	0.0	-3.65e-05
15	17	0.08	0.39	-1.51e-05	0.0	0.0	-0.48	0.15	0.67	0.25	0.0	0.0
		0.0	0.0	2.83e-04	0.0	57.7	-0.48	0.15	0.67	0.25	0.39	0.08
15	19	0.27	0.0	-2.92e-05	0.0	0.0	1.14	0.46	-1.22	0.31	0.0	0.0
		0.0	-0.71	5.37e-04	0.0	57.7	1.14	0.46	-1.22	0.31	-0.71	0.27
15	20	0.20	0.0	-6.52e-06	0.0	0.0	1.29	0.34	-0.65	0.10	0.0	0.0
		0.0	-0.37	2.75e-04	0.0	57.7	1.29	0.34	-0.65	0.10	-0.37	0.20
16	1	1.47	0.0	9.88e-05	-1.92	0.0	-9.76	-1.58	8.04e-04	0.01	-4.64e-04	1.47
		0.0	-4.64e-04	1.49e-04	0.0	57.7	-10.10	-3.50	8.04e-04	0.01	0.0	0.0
16	3	4.44e-03	4.77e-05	3.14e-06	0.0	0.0	0.04	-7.70e-03	-8.25e-05	-1.08e-03	4.77e-05	4.44e-03
		0.0	0.0	3.22e-05	0.0	57.7	0.04	-7.70e-03	-8.25e-05	-1.08e-03	0.0	0.0
16	5	0.0	0.0	0.0	0.0	0.0	-3.59e-04	6.31e-05	0.0	4.15e-06	0.0	-3.65e-05

		-3.65e-05	0.0	-2.06e-05	0.0	57.7	-3.59e-04	6.31e-05	0.0	4.15e-06	0.0	0.0
16	19	0.28	0.0	1.48e-05	0.0	0.0	1.08	-0.48	1.27	-0.18	-0.74	0.28
		0.0	-0.74	-4.99e-04	0.0	57.7	1.08	-0.48	1.27	-0.18	0.0	0.0
16	20	0.20	0.0	9.46e-06	0.0	0.0	1.33	-0.34	0.61	-0.14	-0.35	0.20
		0.0	-0.35	-3.26e-04	0.0	57.7	1.33	-0.34	0.61	-0.14	0.0	0.0
17	1	1.84	-3.56e-04	-9.54e-05	-1.92	0.0	-9.77	1.58	-6.17e-04	-8.10e-03	-3.56e-04	1.47
		1.47	-7.12e-04	-1.48e-04	0.0	57.7	-9.43	-0.34	-6.17e-04	-8.10e-03	-7.12e-04	1.82
17	17	-0.13	0.69	-3.18e-06	0.0	0.0	-0.93	-0.15	0.44	0.08	0.43	-0.13
		-0.22	0.43	-1.58e-04	0.0	57.7	-0.93	-0.15	0.44	0.08	0.69	-0.22
17	19	0.25	-0.35	-9.55e-06	0.0	0.0	1.27	0.09	-0.34	0.14	-0.35	0.20
		0.20	-0.55	3.13e-04	0.0	57.7	1.27	0.09	-0.34	0.14	-0.55	0.25
17	20	0.39	-0.74	-1.47e-05	0.0	0.0	1.05	0.19	-0.73	0.18	-0.74	0.28
		0.28	-1.16	4.71e-04	0.0	57.7	1.05	0.19	-0.73	0.18	-1.16	0.39
18	1	1.84	7.12e-04	8.10e-05	-1.92	0.0	-9.43	0.34	-6.17e-04	-8.10e-03	7.12e-04	1.82
		1.47	3.56e-04	1.56e-04	0.0	57.7	-9.77	-1.58	-6.17e-04	-8.10e-03	3.56e-04	1.47
18	17	-0.08	-0.39	-1.51e-05	0.0	0.0	-0.54	0.14	0.43	0.25	-0.63	-0.16
		-0.16	-0.63	2.75e-04	0.0	57.7	-0.54	0.14	0.43	0.25	-0.39	-0.08
18	19	0.25	-0.37	6.59e-06	0.0	0.0	1.25	-0.09	0.34	-0.10	-0.57	0.25
		0.20	-0.57	-2.63e-04	0.0	57.7	1.25	-0.09	0.34	-0.10	-0.37	0.20
18	20	0.38	-0.71	2.92e-05	0.0	0.0	1.08	-0.19	0.72	-0.31	-1.12	0.38
		0.27	-1.12	-5.12e-04	0.0	57.7	1.08	-0.19	0.72	-0.31	-0.71	0.27
19	1	2.37	4.41e-04	-6.82e-05	-1.92	0.0	-17.50	2.05	3.82e-04	6.01e-03	2.21e-04	1.74
		1.74	2.21e-04	-1.50e-04	0.0	57.7	-17.16	0.13	3.82e-04	6.01e-03	4.41e-04	2.37
19	17	-0.10	0.85	-5.06e-06	0.0	0.0	-0.72	-0.11	0.64	0.14	0.49	-0.10
		-0.16	0.49	-2.29e-04	0.0	57.7	-0.72	-0.11	0.64	0.14	0.85	-0.16
19	19	0.30	-0.66	-1.45e-05	0.0	0.0	2.44	0.13	-0.83	0.32	-0.66	0.23
		0.23	-1.15	5.62e-04	0.0	57.7	2.44	0.13	-0.83	0.32	-1.15	0.30
19	20	0.39	-1.18	-1.34e-06	0.0	0.0	2.33	0.19	-1.54	0.44	-1.18	0.28
		0.28	-2.07	7.80e-04	0.0	57.7	2.33	0.19	-1.54	0.44	-2.07	0.39
20	1	2.37	-2.21e-04	6.03e-05	-1.92	0.0	-17.16	-0.13	3.82e-04	6.01e-03	-4.41e-04	2.37
		1.74	-4.41e-04	1.54e-04	0.0	57.7	-17.50	-2.05	3.82e-04	6.01e-03	-2.21e-04	1.74
20	5	-4.14e-05	0.0	0.0	0.0	0.0	-4.07e-04	7.16e-05	0.0	0.0	0.0	-8.27e-05
		-8.27e-05	0.0	-2.06e-05	0.0	57.7	-4.07e-04	7.16e-05	0.0	0.0	0.0	-4.14e-05
20	19	0.31	-0.71	-6.30e-06	0.0	0.0	2.39	-0.14	0.86	-0.22	-1.21	0.31
		0.23	-1.21	-5.17e-04	0.0	57.7	2.39	-0.14	0.86	-0.22	-0.71	0.23
20	20	0.37	-1.13	2.28e-05	0.0	0.0	2.39	-0.19	1.50	-0.53	-1.99	0.37
		0.27	-1.99	-8.24e-04	0.0	57.7	2.39	-0.19	1.50	-0.53	-1.13	0.27
21	1	2.20	1.06e-04	-4.54e-05	-1.92	0.0	-18.36	1.90	9.21e-05	1.45e-03	5.32e-05	1.65
		1.65	5.32e-05	-1.51e-04	0.0	57.7	-18.02	-0.02	9.21e-05	1.45e-03	1.06e-04	2.20
21	17	-0.04	0.05	-1.51e-05	0.0	0.0	-0.50	-0.03	0.02	0.15	0.04	-0.04
		-0.06	0.04	6.03e-05	0.0	57.7	-0.50	-0.03	0.02	0.15	0.05	-0.06
21	18	-0.04	0.05	-1.54e-05	0.0	0.0	-0.49	-0.03	0.02	0.15	0.04	-0.04
		-0.06	0.04	5.83e-05	0.0	57.7	-0.49	-0.03	0.02	0.15	0.05	-0.06
21	19	0.31	-0.86	-1.72e-05	0.0	0.0	2.57	0.14	-1.11	0.41	-0.86	0.23
		0.23	-1.50	6.79e-04	0.0	57.7	2.57	0.14	-1.11	0.41	-1.50	0.31
21	20	0.33	-0.91	6.41e-06	0.0	0.0	2.51	0.14	-1.15	0.31	-0.91	0.25
		0.25	-1.57	6.33e-04	0.0	57.7	2.51	0.14	-1.15	0.31	-1.57	0.33
22	1	2.20	-5.32e-05	4.63e-05	-1.92	0.0	-18.02	0.02	9.21e-05	1.45e-03	-1.06e-04	2.20
		1.65	-1.06e-04	1.52e-04	0.0	57.7	-18.36	-1.90	9.21e-05	1.45e-03	-5.32e-05	1.65
22	3	0.01	1.15e-06	1.49e-06	0.0	0.0	0.07	-0.01	0.0	-1.56e-05	1.15e-06	0.01
		7.01e-03	0.0	3.30e-05	0.0	57.7	0.07	-0.01	0.0	-1.56e-05	0.0	7.01e-03
22	5	-9.95e-06	0.0	0.0	0.0	0.0	-9.80e-05	1.72e-05	0.0	0.0	0.0	-1.99e-05
		-1.99e-05	0.0	-2.06e-05	0.0	57.7	-9.80e-05	1.72e-05	0.0	0.0	0.0	-9.95e-06
22	19	0.33	-0.91	-6.14e-06	0.0	0.0	2.51	-0.14	1.15	-0.31	-1.57	0.33
		0.25	-1.57	-6.34e-04	0.0	57.7	2.51	-0.14	1.15	-0.31	-0.91	0.25
22	20	0.31	-0.86	1.75e-05	0.0	0.0	2.57	-0.14	1.11	-0.41	-1.50	0.31
		0.23	-1.50	-6.80e-04	0.0	57.7	2.57	-0.14	1.11	-0.41	-0.86	0.23
23	1	2.37	-1.05e-04	-5.96e-05	-1.92	0.0	-17.50	2.05	-1.81e-04	-2.86e-03	-1.05e-04	1.74
		1.74	-2.10e-04	-1.53e-04	0.0	57.7	-17.17	0.13	-1.81e-04	-2.86e-03	-2.10e-04	2.37
23	17	-0.04	0.77	-2.09e-05	0.0	0.0	-0.43	0.07	0.60	0.32	0.43	-0.04
		-0.08	0.43	3.57e-04	0.0	57.7	-0.43	0.07	0.60	0.32	0.77	-0.08
23	19	0.37	-1.12	-2.24e-05	0.0	0.0	2.38	0.19	-1.49	0.53	-1.12	0.27
		0.27	-1.98	8.22e-04	0.0	57.7	2.38	0.19	-1.49	0.53	-1.98	0.37
23	20	0.31	-0.71	6.68e-06	0.0	0.0	2.39	0.14	-0.86	0.22	-0.71	0.23
		0.23	-1.20	5.15e-04	0.0	57.7	2.39	0.14	-0.86	0.22	-1.20	0.31
24	1	2.37	2.10e-04	6.89e-05	-1.92	0.0	-17.17	-0.13	-1.81e-04	-2.86e-03	2.10e-04	2.37
		1.74	1.05e-04	1.51e-04	0.0	57.7	-17.50	-2.05	-1.81e-04	-2.86e-03	1.05e-04	1.74
24	5	-4.12e-05	0.0	0.0	0.0	0.0	-4.05e-04	7.13e-05	0.0	0.0	0.0	-8.23e-05
		-8.23e-05	0.0	-2.06e-05	0.0	57.7	-4.05e-04	7.13e-05	0.0	0.0	0.0	-4.12e-05
24	19	0.39	-1.18	1.40e-06	0.0	0.0	2.32	-0.19	1.53	-0.44	-2.06	0.39
		0.28	-2.06	-7.79e-04	0.0	57.7	2.32	-0.19	1.53	-0.44	-1.18	0.28
24	20	0.30	-0.66	1.45e-05	0.0	0.0	2.44	-0.13	0.83	-0.33	-1.14	0.30
		0.23	-1.14	-5.62e-04	0.0	57.7	2.44	-0.13	0.83	-0.33	-0.66	0.23
25	1	1.84	9.28e-04	-8.02e-05	-1.92	0.0	-9.76	1.58	8.04e-04	0.01	4.64e-04	1.47
		1.47	4.64e-04	-1.55e-04	0.0	57.7	-9.43	-0.34	8.04e-04	0.01	9.28e-04	1.83
25	5	-3.65e-05	0.0	0.0	0.0	0.0	-3.59e-04	-6.31e-05	0.0	4.15e-06	0.0	-3.65e-05
		-7.29e-05	0.0	2.06e-05	0.0	57.7	-3.59e-04	-6.31e-05	0.0	4.15e-06	0.0	-7.29e-05
25	17	0.17	0.63	-1.51e-05	0.0	0.0	0.54	0.14	0.43	0.25	0.39	0.08
		0.08	0.39	2.76e-04	0.0	57.7	0.54	0.14	0.43	0.25	0.63	0.17

25	19	0.37	-0.71	-2.90e-05	0.0	0.0	1.08	0.19	-0.72	0.31	-0.71	0.27
		0.27	-1.12	5.11e-04	0.0	57.7	1.08	0.19	-0.72	0.31	-1.12	0.37
25	20	0.25	-0.37	-6.35e-06	0.0	0.0	1.26	0.09	-0.34	0.10	-0.37	0.20
		0.20	-0.57	2.62e-04	0.0	57.7	1.26	0.09	-0.34	0.10	-0.57	0.25
26	1	1.84	-4.64e-04	9.64e-05	-1.92	0.0	-9.43	0.34	8.04e-04	0.01	-9.28e-04	1.83
		1.47	-9.28e-04	1.49e-04	0.0	57.7	-9.76	-1.58	8.04e-04	0.01	-4.64e-04	1.47
26	3	8.89e-03	9.53e-05	3.14e-06	0.0	0.0	0.04	-7.70e-03	-8.25e-05	-1.08e-03	9.53e-05	8.89e-03
		4.44e-03	4.77e-05	3.22e-05	0.0	57.7	0.04	-7.70e-03	-8.25e-05	-1.08e-03	4.77e-05	4.44e-03
26	5	-3.65e-05	0.0	0.0	0.0	0.0	-3.59e-04	6.31e-05	0.0	4.15e-06	0.0	-7.29e-05
		-7.29e-05	0.0	-2.06e-05	0.0	57.7	-3.59e-04	6.31e-05	0.0	4.15e-06	0.0	-3.65e-05
26	19	0.38	-0.74	1.45e-05	0.0	0.0	1.05	-0.19	0.73	-0.18	-1.16	0.38
		0.28	-1.16	-4.71e-04	0.0	57.7	1.05	-0.19	0.73	-0.18	-0.74	0.28
26	20	0.24	-0.35	9.30e-06	0.0	0.0	1.27	-0.09	0.34	-0.14	-0.55	0.24
		0.20	-0.55	-3.13e-04	0.0	57.7	1.27	-0.09	0.34	-0.14	-0.35	0.20
33	1	1.82	-7.12e-04	-6.61e-05	-0.64	0.0	-9.43	-0.34	-6.17e-04	-8.10e-03	-7.12e-04	1.82
		1.44	-1.07e-03	-1.48e-04	0.0	57.7	-9.32	-0.98	-6.17e-04	-8.10e-03	-1.07e-03	1.44
33	17	-0.22	0.80	-3.09e-06	0.0	0.0	-0.80	-0.12	0.20	0.08	0.69	-0.22
		-0.28	0.69	-1.09e-04	0.0	57.7	-0.80	-0.12	0.20	0.08	0.80	-0.28
33	19	0.25	-0.55	-6.97e-06	0.0	0.0	1.23	0.09	-0.16	0.14	-0.55	0.25
		0.20	-0.64	2.68e-04	0.0	57.7	1.23	0.09	-0.16	0.14	-0.64	0.20
33	20	0.39	-1.16	-9.22e-06	0.0	0.0	1.03	0.09	-0.32	0.18	-1.16	0.39
		0.39	-1.34	3.75e-04	0.0	57.7	1.03	0.09	-0.32	0.18	-1.34	0.39
34	1	1.82	1.07e-03	5.18e-05	-0.64	0.0	-9.32	0.98	-6.17e-04	-8.10e-03	1.07e-03	1.44
		1.44	7.12e-04	1.56e-04	0.0	57.7	-9.43	0.34	-6.17e-04	-8.10e-03	7.12e-04	1.82
34	17	-0.16	-0.63	4.60e-04	0.0	0.0	-0.63	0.15	0.21	0.25	-0.75	-0.25
		-0.25	-0.75	2.29e-04	0.0	57.7	-0.63	0.15	0.21	0.25	-0.63	-0.16
34	19	0.25	-0.57	3.90e-06	0.0	0.0	1.22	-0.09	0.14	-0.10	-0.65	0.20
		0.20	-0.65	-2.16e-04	0.0	57.7	1.22	-0.09	0.14	-0.10	-0.57	0.25
34	20	0.38	-1.12	2.38e-05	0.0	0.0	1.05	-0.09	0.33	-0.31	-1.31	0.38
		0.38	-1.31	-4.19e-04	0.0	57.7	1.05	-0.09	0.33	-0.31	-1.12	0.38
35	1	2.38	6.62e-04	-6.48e-05	-1.92	0.0	-17.16	0.13	3.82e-04	6.01e-03	4.41e-04	2.37
		1.90	4.41e-04	-1.50e-04	0.0	57.7	-16.83	-1.79	3.82e-04	6.01e-03	6.62e-04	1.90
35	17	-0.16	1.06	-4.90e-06	0.0	0.0	-0.52	-0.06	0.36	0.14	0.85	-0.16
		-0.19	0.85	-2.11e-04	0.0	57.7	-0.52	-0.06	0.36	0.14	1.06	-0.19
35	19	0.30	-1.15	-1.42e-05	0.0	0.0	2.38	0.13	-0.48	0.32	-1.15	0.30
		0.23	-1.42	5.18e-04	0.0	57.7	2.38	0.13	-0.48	0.32	-1.42	0.23
35	20	0.39	-2.07	0.0	0.0	0.0	2.29	0.11	-0.88	0.44	-2.07	0.39
		0.34	-2.58	7.18e-04	0.0	57.7	2.29	0.11	-0.88	0.44	-2.58	0.34
36	1	2.38	-4.41e-04	5.69e-05	-1.92	0.0	-16.83	1.79	3.82e-04	6.01e-03	-6.62e-04	1.90
		1.90	-6.62e-04	1.54e-04	0.0	57.7	-17.16	-0.13	3.82e-04	6.01e-03	-4.41e-04	2.37
36	5	-8.27e-05	0.0	0.0	0.0	0.0	-4.07e-04	7.16e-05	0.0	0.0	0.0	-1.24e-04
		-1.24e-04	0.0	-2.06e-05	0.0	57.7	-4.07e-04	7.16e-05	0.0	0.0	0.0	-8.27e-05
36	17	0.08	-0.76	-2.08e-05	0.0	0.0	0.30	0.08	0.38	0.31	-0.98	-0.12
		-0.12	-0.98	3.27e-04	0.0	57.7	0.30	0.08	0.38	0.31	-0.76	0.08
36	19	0.31	-1.21	-6.59e-06	0.0	0.0	2.36	-0.13	0.46	-0.22	-1.47	0.24
		0.24	-1.47	-4.71e-04	0.0	57.7	2.36	-0.13	0.46	-0.22	-1.21	0.31
36	20	0.37	-1.99	2.24e-05	0.0	0.0	2.32	-0.10	0.90	-0.53	-2.51	0.32
		0.32	-2.51	-7.65e-04	0.0	57.7	2.32	-0.10	0.90	-0.53	-1.99	0.37
37	1	2.20	1.59e-04	-4.22e-05	-1.92	0.0	-18.02	-0.02	9.21e-05	1.45e-03	1.06e-04	2.20
		1.64	1.06e-04	-1.51e-04	0.0	57.7	-17.68	-1.93	9.21e-05	1.45e-03	1.59e-04	1.64
37	17	-0.05	0.05	-1.52e-05	0.0	0.0	-0.27	0.01	0.01	0.15	0.05	-0.06
		-0.06	0.05	6.23e-05	0.0	57.7	-0.27	0.01	0.01	0.15	0.05	-0.05
37	18	-0.05	0.05	-1.55e-05	0.0	0.0	-0.26	0.01	0.01	0.15	0.05	-0.06
		-0.06	0.05	6.03e-05	0.0	57.7	-0.26	0.01	0.01	0.15	0.05	-0.05
37	19	0.31	-1.50	-1.69e-05	0.0	0.0	2.50	0.13	-0.65	0.41	-1.50	0.31
		0.24	-1.88	6.27e-04	0.0	57.7	2.50	0.13	-0.65	0.41	-1.88	0.24
37	20	0.33	-1.57	6.73e-06	0.0	0.0	2.48	0.14	-0.64	0.31	-1.57	0.33
		0.25	-1.94	5.78e-04	0.0	57.7	2.48	0.14	-0.64	0.31	-1.94	0.25
38	1	2.20	-1.06e-04	4.31e-05	-1.92	0.0	-17.68	1.93	9.21e-05	1.45e-03	-1.59e-04	1.64
		1.64	-1.59e-04	1.52e-04	0.0	57.7	-18.02	0.02	9.21e-05	1.45e-03	-1.06e-04	2.20
38	3	0.02	1.72e-06	1.48e-06	0.0	0.0	0.07	-0.01	0.0	-1.56e-05	1.72e-06	0.02
		0.01	1.15e-06	3.30e-05	0.0	57.7	0.07	-0.01	0.0	-1.56e-05	1.15e-06	0.01
38	5	-1.99e-05	0.0	0.0	0.0	0.0	-9.80e-05	1.72e-05	0.0	0.0	0.0	-2.99e-05
		-2.99e-05	0.0	-2.06e-05	0.0	57.7	-9.80e-05	1.72e-05	0.0	0.0	0.0	-1.99e-05
38	19	0.33	-1.57	-6.45e-06	0.0	0.0	2.48	-0.14	0.64	-0.31	-1.94	0.25
		0.25	-1.94	-5.79e-04	0.0	57.7	2.48	-0.14	0.64	-0.31	-1.57	0.33
38	20	0.31	-1.50	1.72e-05	0.0	0.0	2.51	-0.13	0.65	-0.41	-1.88	0.24
		0.24	-1.88	-6.27e-04	0.0	57.7	2.51	-0.13	0.65	-0.41	-1.50	0.31
39	1	2.37	-2.10e-04	-5.62e-05	-1.92	0.0	-17.17	0.13	-1.81e-04	-2.86e-03	-2.10e-04	2.37
		1.90	-3.14e-04	-1.53e-04	0.0	57.7	-16.83	-1.79	-1.81e-04	-2.86e-03	-3.14e-04	1.90
39	17	0.12	0.99	-2.09e-05	0.0	0.0	-0.30	0.08	0.38	0.32	0.77	-0.08
		-0.08	0.77	3.31e-04	0.0	57.7	-0.30	0.08	0.38	0.32	0.99	0.12
39	19	0.37	-1.98	-2.21e-05	0.0	0.0	2.32	0.10	-0.89	0.53	-1.98	0.37
		0.32	-2.49	7.62e-04	0.0	57.7	2.32	0.10	-0.89	0.53	-2.49	0.32
39	20	0.31	-1.20	6.96e-06	0.0	0.0	2.36	0.13	-0.46	0.22	-1.20	0.31
		0.24	-1.47	4.69e-04	0.0	57.7	2.36	0.13	-0.46	0.22	-1.47	0.24
40	1	2.37	3.14e-04	6.55e-05	-1.92	0.0	-16.83	1.79	-1.81e-04	-2.86e-03	3.14e-04	1.90
		1.90	2.10e-04	1.51e-04	0.0	57.7	-17.17	-0.13	-1.81e-04	-2.86e-03	2.10e-04	2.37
40	5	-8.23e-05	0.0	0.0	0.0	0.0	-4.05e-04	7.13e-05	0.0	0.0	0.0	-1.24e-04

		-1.24e-04	0.0	-2.06e-05	0.0	57.7	-4.05e-04	7.13e-05	0.0	0.0	0.0	-8.23e-05
40	19	0.39	-2.06	1.00e-06	0.0	0.0	2.29	-0.11	0.87	-0.44	-2.56	0.34
		0.34	-2.56	-7.16e-04	0.0	57.7	2.29	-0.11	0.87	-0.44	-2.06	0.39
40	20	0.30	-1.14	1.43e-05	0.0	0.0	2.38	-0.13	0.47	-0.33	-1.41	0.23
		0.23	-1.41	-5.18e-04	0.0	57.7	2.38	-0.13	0.47	-0.33	-1.14	0.30
41	1	1.83	1.39e-03	-5.10e-05	-0.64	0.0	-9.43	-0.34	8.04e-04	0.01	9.28e-04	1.83
		1.45	9.28e-04	-1.55e-04	0.0	57.7	-9.31	-0.98	8.04e-04	0.01	1.39e-03	1.45
41	5	-7.29e-05	0.0	0.0	0.0	0.0	-3.59e-04	-6.31e-05	0.0	4.15e-06	0.0	-7.29e-05
		-1.09e-04	0.0	2.06e-05	0.0	57.7	-3.59e-04	-6.31e-05	0.0	4.15e-06	0.0	-1.09e-04
41	17	0.25	0.76	4.67e-04	0.0	0.0	0.62	0.15	0.21	0.25	0.63	0.17
		0.17	0.63	2.30e-04	0.0	57.7	0.62	0.15	0.21	0.25	0.76	0.25
41	19	0.38	-1.12	-2.36e-05	0.0	0.0	1.04	0.09	-0.33	0.31	-1.12	0.37
		0.37	-1.31	4.18e-04	0.0	57.7	1.04	0.09	-0.33	0.31	-1.31	0.38
41	20	0.25	-0.57	-3.71e-06	0.0	0.0	1.23	0.09	-0.14	0.10	-0.57	0.25
		0.20	-0.65	2.15e-04	0.0	57.7	1.23	0.09	-0.14	0.10	-0.65	0.20
42	1	1.83	-9.28e-04	6.72e-05	-0.64	0.0	-9.31	0.98	8.04e-04	0.01	-1.39e-03	1.45
		1.45	-1.39e-03	1.49e-04	0.0	57.7	-9.43	0.34	8.04e-04	0.01	-9.28e-04	1.83
42	3	0.01	1.43e-04	2.98e-06	0.0	0.0	0.04	-7.70e-03	-8.25e-05	-1.08e-03	1.43e-04	0.01
		8.89e-03	9.53e-05	3.22e-05	0.0	57.7	0.04	-7.70e-03	-8.25e-05	-1.08e-03	9.53e-05	8.89e-03
42	5	-7.29e-05	0.0	0.0	0.0	0.0	-3.59e-04	6.31e-05	0.0	4.15e-06	0.0	-1.09e-04
		-1.09e-04	0.0	-2.06e-05	0.0	57.7	-3.59e-04	6.31e-05	0.0	4.15e-06	0.0	-7.29e-05
42	19	0.39	-1.16	9.03e-06	0.0	0.0	1.03	-0.09	0.32	-0.18	-1.34	0.39
		0.38	-1.34	-3.75e-04	0.0	57.7	1.03	-0.09	0.32	-0.18	-1.16	0.38
42	20	0.24	-0.55	6.77e-06	0.0	0.0	1.24	-0.09	0.16	-0.14	-0.64	0.20
		0.20	-0.64	-2.68e-04	0.0	57.7	1.24	-0.09	0.16	-0.14	-0.55	0.24
43	1	1.44	-1.07e-03	-2.10e-05	-0.64	0.0	-9.32	-0.98	-6.17e-04	-8.10e-03	-1.07e-03	1.44
		0.69	-1.42e-03	-1.48e-04	0.0	57.7	-9.21	-1.62	-6.17e-04	-8.10e-03	-1.42e-03	0.69
43	17	-0.28	0.84	1.87e-06	0.0	0.0	-0.74	-0.11	0.06	0.08	0.80	-0.28
		-0.33	0.80	-2.33e-05	0.0	57.7	-0.74	-0.11	0.06	0.08	0.84	-0.33
43	19	0.20	-0.64	-2.88e-06	0.0	0.0	1.21	0.17	-0.06	0.14	-0.64	0.20
		0.11	-0.67	1.91e-04	0.0	57.7	1.21	0.17	-0.06	0.14	-0.67	0.11
43	20	0.39	-1.34	1.90e-06	0.0	0.0	1.02	0.14	-0.10	0.18	-1.34	0.39
		0.35	-1.41	2.11e-04	0.0	57.7	1.02	0.14	-0.10	0.18	-1.41	0.35
44	1	1.44	1.42e-03	6.60e-06	-0.64	0.0	-9.21	1.62	-6.17e-04	-8.10e-03	1.42e-03	0.69
		0.69	1.07e-03	1.56e-04	0.0	57.7	-9.32	0.98	-6.17e-04	-8.10e-03	1.07e-03	1.44
44	17	-0.25	-0.75	7.03e-06	0.0	0.0	-0.68	0.15	0.08	0.25	-0.80	-0.33
		-0.33	-0.80	1.43e-04	0.0	57.7	-0.68	0.15	0.08	0.25	-0.75	-0.25
44	19	0.20	-0.65	0.0	0.0	0.0	1.21	-0.17	0.04	-0.10	-0.68	0.11
		0.11	-0.68	-1.37e-04	0.0	57.7	1.21	-0.17	0.04	-0.10	-0.65	0.20
44	20	0.38	-1.31	1.28e-05	0.0	0.0	1.03	-0.14	0.12	-0.31	-1.38	0.35
		0.35	-1.38	-2.59e-04	0.0	57.7	1.03	-0.14	0.12	-0.31	-1.31	0.38
45	1	1.90	8.82e-04	-3.75e-05	-0.64	0.0	-16.83	-1.79	3.82e-04	6.01e-03	6.62e-04	1.90
		0.68	6.62e-04	-1.50e-04	0.0	57.7	-16.71	-2.42	3.82e-04	6.01e-03	8.82e-04	0.68
45	17	-0.19	1.14	-7.26e-06	0.0	0.0	-0.40	0.05	0.14	0.14	1.06	-0.19
		-0.20	1.06	-1.33e-04	0.0	57.7	-0.40	0.05	0.14	0.14	1.14	-0.20
45	19	0.23	-1.42	-1.22e-05	0.0	0.0	2.34	0.30	-0.21	0.32	-1.42	0.23
		0.08	-1.54	4.03e-04	0.0	57.7	2.34	0.30	-0.21	0.32	-1.54	0.08
45	20	0.34	-2.58	3.30e-06	0.0	0.0	2.27	0.29	-0.35	0.44	-2.58	0.34
		0.19	-2.78	5.27e-04	0.0	57.7	2.27	0.29	-0.35	0.44	-2.78	0.19
46	1	1.90	-6.62e-04	2.96e-05	-0.64	0.0	-16.71	2.42	3.82e-04	6.01e-03	-8.82e-04	0.68
		0.68	-8.82e-04	1.54e-04	0.0	57.7	-16.83	1.79	3.82e-04	6.01e-03	-6.62e-04	1.90
46	5	-1.24e-04	0.0	0.0	0.0	0.0	-4.07e-04	7.16e-05	0.0	0.0	0.0	-1.65e-04
		-1.65e-04	0.0	-2.06e-05	0.0	57.7	-4.07e-04	7.16e-05	0.0	0.0	0.0	-1.24e-04
46	17	-0.12	-0.98	-1.91e-05	0.0	0.0	-0.29	0.09	0.18	0.31	-1.08	-0.16
		-0.16	-1.08	2.49e-04	0.0	57.7	-0.29	0.09	0.18	0.31	-0.98	-0.12
46	19	0.24	-1.47	-8.76e-06	0.0	0.0	2.33	-0.30	0.17	-0.22	-1.57	0.08
		0.08	-1.57	-3.51e-04	0.0	57.7	2.33	-0.30	0.17	-0.22	-1.47	0.24
46	20	0.32	-2.51	1.84e-05	0.0	0.0	2.28	-0.28	0.40	-0.53	-2.73	0.18
		0.18	-2.73	-5.80e-04	0.0	57.7	2.28	-0.28	0.40	-0.53	-2.51	0.32
47	1	1.64	2.13e-04	-1.95e-05	-0.64	0.0	-17.68	-1.93	9.21e-05	1.45e-03	1.59e-04	1.64
		0.33	1.59e-04	-1.51e-04	0.0	57.7	-17.57	-2.57	9.21e-05	1.45e-03	2.13e-04	0.33
47	17	-0.03	0.05	-1.56e-05	0.0	0.0	-0.11	0.04	0.03	0.15	0.05	-0.05
		-0.05	0.03	6.57e-05	0.0	57.7	-0.11	0.04	0.03	0.15	0.03	-0.03
47	18	-0.03	0.05	-1.59e-05	0.0	0.0	-0.11	0.04	0.03	0.15	0.05	-0.05
		-0.05	0.03	6.35e-05	0.0	57.7	-0.11	0.04	0.03	0.15	0.03	-0.03
47	19	0.24	-1.88	-1.45e-05	0.0	0.0	2.46	0.31	-0.29	0.41	-1.88	0.24
		0.06	-2.04	4.80e-04	0.0	57.7	2.46	0.31	-0.29	0.41	-2.04	0.06
47	20	0.25	-1.94	9.31e-06	0.0	0.0	2.45	0.32	-0.25	0.31	-1.94	0.25
		0.07	-2.08	4.27e-04	0.0	57.7	2.45	0.32	-0.25	0.31	-2.08	0.07
48	1	1.64	-1.59e-04	2.04e-05	-0.64	0.0	-17.57	2.57	9.21e-05	1.45e-03	-2.13e-04	0.33
		0.33	-2.13e-04	1.52e-04	0.0	57.7	-17.68	1.93	9.21e-05	1.45e-03	-1.59e-04	1.64
48	3	0.03	2.29e-06	1.11e-06	0.0	0.0	0.07	-0.01	0.0	-1.56e-05	2.29e-06	0.03
		0.02	1.72e-06	3.30e-05	0.0	57.7	0.07	-0.01	0.0	-1.56e-05	1.72e-06	0.02
48	5	-2.99e-05	0.0	0.0	0.0	0.0	-9.80e-05	1.72e-05	0.0	0.0	0.0	-3.98e-05
		-3.98e-05	0.0	-2.06e-05	0.0	57.7	-9.80e-05	1.72e-05	0.0	0.0	0.0	-2.99e-05
48	19	0.25	-1.94	-9.02e-06	0.0	0.0	2.45	-0.32	0.25	-0.31	-2.08	0.07
		0.07	-2.08	-4.28e-04	0.0	57.7	2.45	-0.32	0.25	-0.31	-1.94	0.25
48	20	0.24	-1.88	1.48e-05	0.0	0.0	2.46	-0.31	0.29	-0.41	-2.04	0.06
		0.06	-2.04	-4.81e-04	0.0	57.7	2.46	-0.31	0.29	-0.41	-1.88	0.24

49	1	1.90	-3.14e-04	-2.89e-05	-0.64	0.0	-16.83	-1.79	-1.81e-04	-2.86e-03	-3.14e-04	1.90
		0.68	-4.19e-04	-1.53e-04	0.0	57.7	-16.72	-2.43	-1.81e-04	-2.86e-03	-4.19e-04	0.68
49	5	-1.24e-04	0.0	0.0	0.0	0.0	-4.05e-04	-7.13e-05	0.0	0.0	0.0	-1.24e-04
		-1.65e-04	0.0	2.06e-05	0.0	57.7	-4.05e-04	-7.13e-05	0.0	0.0	0.0	-1.65e-04
49	17	0.16	1.10	-1.91e-05	0.0	0.0	0.29	0.09	0.18	0.32	0.99	0.12
		0.12	0.99	2.51e-04	0.0	57.7	0.29	0.09	0.18	0.32	1.10	0.16
49	19	0.32	-2.49	-1.80e-05	0.0	0.0	2.28	0.28	-0.39	0.53	-2.49	0.32
		0.18	-2.72	5.77e-04	0.0	57.7	2.28	0.28	-0.39	0.53	-2.72	0.18
49	20	0.24	-1.47	9.10e-06	0.0	0.0	2.33	0.30	-0.17	0.22	-1.47	0.24
		0.08	-1.57	3.49e-04	0.0	57.7	2.33	0.30	-0.17	0.22	-1.57	0.08
50	1	1.90	4.19e-04	3.82e-05	-0.64	0.0	-16.72	2.43	-1.81e-04	-2.86e-03	4.19e-04	0.68
		0.68	3.14e-04	1.51e-04	0.0	57.7	-16.83	1.79	-1.81e-04	-2.86e-03	3.14e-04	1.90
50	5	-1.24e-04	0.0	0.0	0.0	0.0	-4.05e-04	7.13e-05	0.0	0.0	0.0	-1.65e-04
		-1.65e-04	0.0	-2.06e-05	0.0	57.7	-4.05e-04	7.13e-05	0.0	0.0	0.0	-1.24e-04
50	19	0.34	-2.56	-3.28e-06	0.0	0.0	2.26	-0.29	0.35	-0.44	-2.76	0.19
		0.19	-2.76	-5.27e-04	0.0	57.7	2.26	-0.29	0.35	-0.44	-2.56	0.34
50	20	0.23	-1.41	1.23e-05	0.0	0.0	2.35	-0.30	0.21	-0.33	-1.53	0.08
		0.08	-1.53	-4.03e-04	0.0	57.7	2.35	-0.30	0.21	-0.33	-1.41	0.23
51	1	1.45	1.86e-03	-7.64e-06	-0.64	0.0	-9.31	-0.98	8.04e-04	0.01	1.39e-03	1.45
		0.70	1.39e-03	-1.54e-04	0.0	57.7	-9.20	-1.62	8.04e-04	0.01	1.86e-03	0.70
51	5	-1.09e-04	0.0	0.0	0.0	0.0	-3.59e-04	-6.31e-05	0.0	4.15e-06	0.0	-1.09e-04
		-1.46e-04	0.0	2.06e-05	0.0	57.7	-3.59e-04	-6.31e-05	0.0	4.15e-06	0.0	-1.46e-04
51	17	0.33	0.80	6.92e-06	0.0	0.0	0.68	0.15	0.08	0.25	0.76	0.25
		0.25	0.76	1.44e-04	0.0	57.7	0.68	0.15	0.08	0.25	0.80	0.33
51	19	0.38	-1.31	-1.27e-05	0.0	0.0	1.02	0.14	-0.12	0.31	-1.31	0.38
		0.35	-1.38	2.58e-04	0.0	57.7	1.02	0.14	-0.12	0.31	-1.38	0.35
51	20	0.20	-0.65	0.0	0.0	0.0	1.22	0.17	-0.04	0.10	-0.65	0.20
		0.11	-0.68	1.36e-04	0.0	57.7	1.22	0.17	-0.04	0.10	-0.68	0.11
52	1	1.45	-1.39e-03	2.19e-05	-0.64	0.0	-9.20	1.62	8.04e-04	0.01	-1.86e-03	0.70
		0.70	-1.86e-03	1.49e-04	0.0	57.7	-9.31	0.98	8.04e-04	0.01	-1.39e-03	1.45
52	3	0.02	1.91e-04	2.56e-06	0.0	0.0	0.04	-7.70e-03	-8.25e-05	-1.08e-03	1.91e-04	0.02
		0.01	1.43e-04	3.22e-05	0.0	57.7	0.04	-7.70e-03	-8.25e-05	-1.08e-03	1.43e-04	0.01
52	5	-1.09e-04	0.0	0.0	0.0	0.0	-3.59e-04	6.31e-05	0.0	4.15e-06	0.0	-1.46e-04
		-1.46e-04	0.0	-2.06e-05	0.0	57.7	-3.59e-04	6.31e-05	0.0	4.15e-06	0.0	-1.09e-04
52	19	0.39	-1.34	-2.60e-06	0.0	0.0	1.02	-0.14	0.10	-0.18	-1.40	0.35
		0.35	-1.40	-2.12e-04	0.0	57.7	1.02	-0.14	0.10	-0.18	-1.34	0.39
52	20	0.20	-0.64	2.81e-06	0.0	0.0	1.22	-0.17	0.06	-0.14	-0.67	0.11
		0.11	-0.67	-1.91e-04	0.0	57.7	1.22	-0.17	0.06	-0.14	-0.64	0.20
53	1	0.79	1.72e-04	-1.10e-05	-1.01	0.0	-16.88	0.51	3.82e-04	6.07e-03	-1.72e-04	0.68
		0.68	-1.72e-04	3.35e-06	0.0	90.0	-16.88	-0.51	3.82e-04	6.07e-03	1.72e-04	0.68
53	17	-0.16	1.12	-2.15e-05	0.0	0.0	-0.34	0.06	0.03	0.15	-1.14	-0.20
		-0.20	-1.14	9.69e-05	0.0	90.0	-0.34	0.06	0.03	0.15	1.12	-0.16
53	19	0.08	-1.57	-1.65e-05	0.0	0.0	2.35	-9.38e-03	-0.02	0.06	-1.57	0.08
		0.08	-1.59	8.47e-05	0.0	90.0	2.35	-9.38e-03	-0.02	0.06	-1.59	0.08
53	20	0.19	-2.78	1.70e-05	0.0	0.0	2.29	-0.01	0.03	-0.06	-2.81	0.19
		0.18	-2.81	8.51e-05	0.0	90.0	2.29	-0.01	0.03	-0.06	-2.78	0.18
54	1	0.45	4.14e-05	-3.98e-06	-1.01	0.0	-17.75	0.51	9.21e-05	1.46e-03	-4.14e-05	0.33
		0.33	-4.14e-05	0.0	0.0	90.0	-17.75	-0.51	9.21e-05	1.46e-03	4.14e-05	0.33
54	17	0.03	0.02	-2.58e-05	0.0	0.0	-0.01	0.06	0.03	0.15	-0.01	-0.03
		-0.03	-0.01	1.13e-04	0.0	90.0	-0.01	0.06	0.03	0.15	0.02	0.03
54	19	0.07	-2.08	-1.85e-05	0.0	0.0	2.47	-0.01	-0.02	0.06	-2.08	0.06
		0.06	-2.10	1.04e-04	0.0	90.0	2.47	-0.01	-0.02	0.06	-2.10	0.07
54	20	0.07	-2.08	1.89e-05	0.0	0.0	2.48	-0.01	0.02	-0.06	-2.10	0.07
		0.06	-2.10	5.79e-05	0.0	90.0	2.48	-0.01	0.02	-0.06	-2.08	0.06
55	1	0.79	8.16e-05	7.20e-06	-1.01	0.0	-16.88	0.51	-1.81e-04	-2.88e-03	8.16e-05	0.68
		0.68	-8.16e-05	-1.51e-06	0.0	90.0	-16.88	-0.51	-1.81e-04	-2.88e-03	-8.16e-05	0.68
55	5	-1.65e-04	0.0	0.0	0.0	0.0	-4.12e-04	0.0	0.0	0.0	0.0	-1.65e-04
		-1.65e-04	0.0	0.0	0.0	90.0	-4.12e-04	0.0	0.0	0.0	0.0	-1.65e-04
55	17	0.20	1.15	-2.15e-05	0.0	0.0	0.34	0.06	0.03	0.15	-1.13	0.16
		0.16	-1.13	9.69e-05	0.0	90.0	0.34	0.06	0.03	0.15	1.15	0.20
55	19	0.19	-2.77	-1.67e-05	0.0	0.0	2.29	-0.01	-0.03	0.06	-2.77	0.18
		0.18	-2.79	1.30e-04	0.0	90.0	2.29	-0.01	-0.03	0.06	-2.79	0.19
55	20	0.08	-1.56	1.69e-05	0.0	0.0	2.36	-9.65e-03	0.02	-0.06	-1.58	0.08
		0.08	-1.58	-4.62e-05	0.0	90.0	2.36	-9.65e-03	0.02	-0.06	-1.56	0.08

Trave	**M3 mx/mn**	**M2 mx/mn**	**D 2 / D 3**	**Q 2 / Q 3**	**N**	**V 2**	**V 3**	**T**
	-0.33	-2.81	-8.40e-04	-1.92	-18.69	-3.97	-2.05	-0.53
	2.38	1.15	8.39e-04	0.0	2.63	3.97	2.04	0.53

RISULTATI ELEMENTI TIPO SHELL

LEGENDA RISULTATI ELEMENTI TIPO SHELL

Il controllo dei risultati delle analisi condotte, per quanto concerne gli elementi tipo shell, è possibile in relazione alle tabelle sottoriportate.
Per ogni elemento, e per ogni combinazione(o caso di carico) vengono riportati i risultati più significativi.

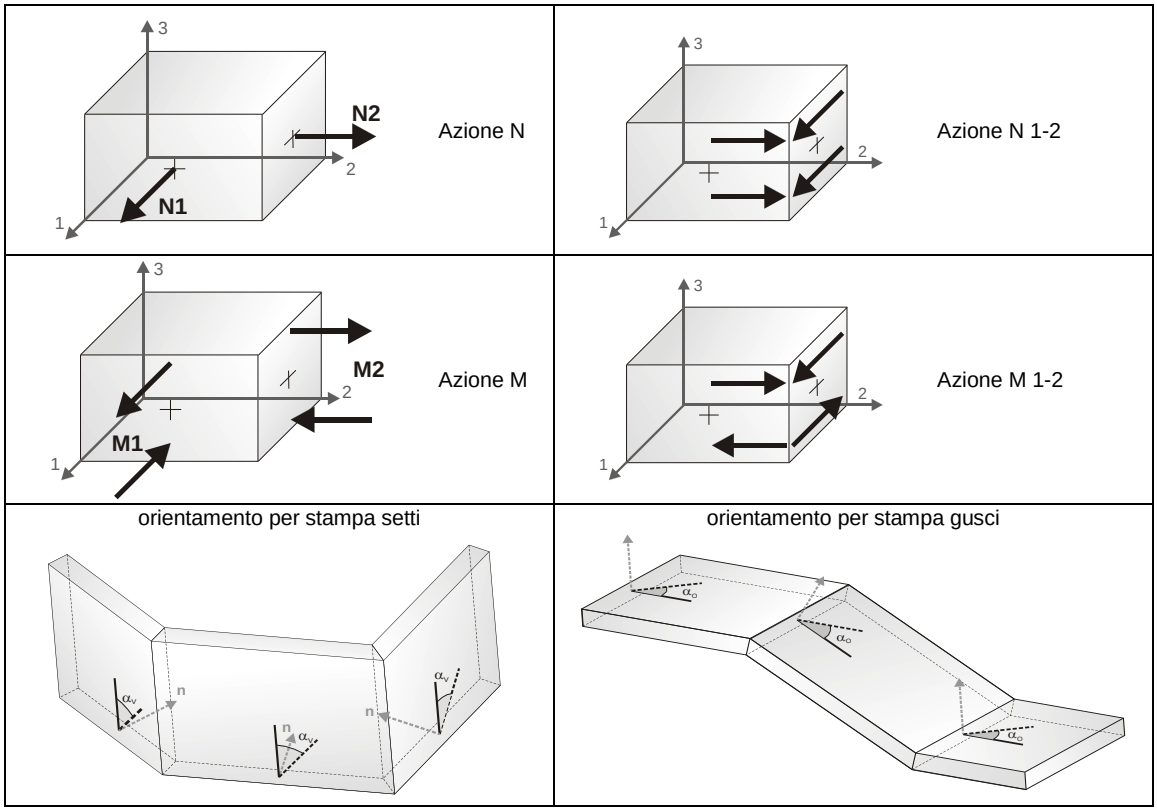

In particolare vengono riportati in ogni nodo di un elemento per ogni combinazione:

tensione di Von Mises		(valore riassuntivo del complessivo stato di sollecitazione)
N max		sforzo membranale principale massimo
N min		sforzo membranale principale minimo
M max		sforzo flessionale principale massimo
M min		sforzo flessionale principale minimo
N1 **N1-2** **M2**	**N2** **M1** **M1-2**	sforzi membranali e flessionali in direzione locale 1 e 2 dell'elemento (lo sforzo 2-1 è uguale allo sforzo 1-2 per la reciprocità delle tensioni tangenziali)

I suddetti risultati possono a scelta del progettista essere preceduti o sostituiti da valori di sollecitazione non più riferiti al sistema locale dell'elemento ma al sistema globale.
In questo caso gli elementi vengono raggruppati in gruppi (M_S: macro gusci o macro setti, raggruppati per materiale, spessore, e posizione fisica) per la valutazione dei valori mediati ai nodi appartenenti agli elementi dei gruppi stessi.
I valori di sollecitazione sono, in questo caso, riferiti ad una terna specifica del gruppo ruotata di α_O attorno all'asse Z per i gusci e ruotata di α_V attorno alla normale (che per definizione è orizzontale) al piano del setto.
Per i setti, in particolare, se α_V è zero, l'asse '1-1 rappresenta la verticale e l'asse '2-2 l'orizzontale contenuta nel setto.

Le azioni sui setti possono essere espresse anche con formato macro, cioè riferite all'intero macroelemento.

In particolare vengono riportati per ogni quota Z dei nodi e per ogni combinazione i seguenti valori:

N memb.	Azione membranale complessiva agente sulla parete in direzione Z
V memb.	Azione complessiva di taglio agente nel piano del macroelemento
V orto	Azione complessiva di taglio agente in direzione perpendicolare al macroelemento
M memb.	Azione flessionale complessiva agente nel piano del macroelemento
M orto	Azione flessionale complessiva agente in direzione perpendicolare al macroelemento
T	Azione torsionale complessiva agente nel piano orizzontale

Macro	Tipo	Angolo 1-Z (gradi)
2	**Setto**	**0.0**

M_S	CDC	Z	N memb.	V memb.	V orto	M memb.	M orto	T
		cm	kN	kN	kN	kN m	kN m	kN m
2	1	0.0	-87.74	0.69	-3.46	-0.24	1.30	-0.09
2	1	35.83	-85.38	-0.77	-1.75	0.65	0.43	-0.06
2	1	35.83	-85.38	-0.77	-1.75	0.65	0.43	-0.06
2	1	71.67	-83.09	-1.33	-1.32	1.76	-0.13	-0.07
2	1	71.67	-83.09	-1.33	-1.32	1.76	-0.13	-0.07
2	1	107.50	-78.91	-1.46	-1.30	3.14	-0.60	-0.02
2	1	137.50	-69.37	0.23	-1.19	3.33	0.15	-0.09

2	1	167.50	-65.67	0.19	-1.16	4.29	-0.20	-0.10
2	1	197.50	-61.97	0.04	-1.15	5.25	-0.55	-0.04
2	1	227.50	-52.58	0.97	-1.29	5.22	0.18	-0.10
2	1	257.50	-48.83	0.93	-1.25	6.01	-0.20	-0.12
2	1	287.50	-45.12	0.82	-1.29	6.76	-0.58	-0.04
2	1	317.50	-35.72	1.15	-1.25	6.60	0.19	-0.11
2	1	347.50	-32.03	1.13	-1.24	7.25	-0.18	-0.14
2	1	377.50	-28.41	1.09	-1.34	7.82	-0.57	-0.12
2	1	405.00	-19.34	2.58	-2.83	6.91	-0.15	-0.18
2	1	432.50	-16.18	2.52	-2.80	6.83	-0.93	0.32
2	1	433.97	-14.67	2.20	-2.70	11.42	-0.98	0.23
2	1	439.58	-5.46	5.98	-1.88	-2.38	-0.70	0.18
2	1	444.68	-6.24	4.08	-0.47	-0.15	-0.22	0.06
2	1	449.79	-4.47	2.26	-0.14	0.07	-0.08	0.02
2	1	454.89	-2.07	0.89	0.07	-0.05	-2.95e-03	7.63e-03
2	17	0.0	-9.32	-30.64	-9.67	-20.29	4.05	0.11
2	17	35.83	-13.21	-27.69	-8.69	-12.63	2.64	-0.95
2	17	35.83	-13.21	-27.69	-8.69	-12.63	2.64	-0.95
2	17	71.67	-13.16	-31.71	-8.54	-13.54	0.86	-1.40
2	17	71.67	-13.16	-31.71	-8.54	-13.54	0.86	-1.40
2	17	107.50	-22.29	-31.23	-8.27	-2.45	-2.19	-0.92
2	17	137.50	-9.68	-30.90	-5.93	3.06	1.66	-1.05
2	17	167.50	-6.34	-30.96	-5.94	4.31	-0.17	-1.12
2	17	197.50	-7.02	-30.50	-5.79	9.42	-1.91	-0.71
2	17	227.50	2.02	-28.65	-6.29	7.15	1.89	-1.00
2	17	257.50	-5.51	-28.62	-6.29	7.80	-0.07	-1.13
2	17	287.50	-10.04	-28.08	-6.13	10.20	-1.85	-0.73
2	17	317.50	-0.99	-25.34	-6.23	7.00	1.91	-1.01
2	17	347.50	-6.88	-25.18	-6.24	8.61	-4.12e-04	-1.17
2	17	377.50	-10.47	-24.46	-6.22	11.29	-1.82	-0.88
2	17	405.00	-3.56	-15.14	-10.93	7.77	1.40	-1.23
2	17	432.50	-5.02	-14.52	-11.12	7.78	-1.62	-0.38
2	17	433.97	-5.20	-12.61	-10.67	8.51	-3.55	-0.04
2	17	439.58	-0.26	-8.20	-7.03	0.42	-2.59	0.15
2	17	444.68	-1.17	-5.53	-1.83	1.54	-0.89	8.68e-03
2	17	449.79	0.54	-4.55	-0.43	0.43	-0.32	-6.00e-03
2	17	454.89	0.84	-2.54	0.28	0.04	-0.03	-0.02
2	20	0.0	11.56	32.66	4.74	63.38	-2.01	-0.11
2	20	35.83	17.89	22.05	3.84	48.24	-1.30	0.34
2	20	35.83	17.89	22.05	3.84	48.24	-1.30	0.34
2	20	71.67	8.89	33.59	3.89	52.95	-0.47	0.57
2	20	71.67	8.89	33.59	3.89	52.95	-0.47	0.57
2	20	107.50	9.80	33.02	3.76	42.86	0.90	0.38
2	20	137.50	4.85	31.83	2.57	35.86	-0.70	0.42
2	20	167.50	6.10	31.75	2.46	28.44	0.05	0.45
2	20	197.50	7.74	31.30	2.32	21.50	0.77	0.28
2	20	227.50	3.42	29.20	2.58	17.42	-0.78	0.40
2	20	257.50	4.66	28.93	2.56	11.90	-0.02	0.46
2	20	287.50	10.05	28.19	2.44	4.46	0.74	0.29
2	20	317.50	6.74	25.84	2.40	1.46	-0.77	0.40
2	20	347.50	7.46	25.28	2.45	-3.44	-0.05	0.48
2	20	377.50	8.89	24.29	2.45	-8.81	0.69	0.39
2	20	405.00	6.54	18.15	5.10	-10.25	-0.54	0.53
2	20	432.50	7.03	17.54	5.25	-13.15	0.88	-0.02
2	20	433.97	7.15	16.49	5.12	-16.64	1.79	-0.06
2	20	439.58	-9.56	6.97	3.34	9.82	1.23	-0.15
2	20	444.68	2.33	4.92	0.72	-1.15	0.36	-0.01
2	20	449.79	0.52	3.43	0.21	-0.18	0.13	1.20e-03
2	20	454.89	-4.10e-03	1.59	-0.12	-0.03	0.01	6.72e-03

M_S	**N memb.**	**V memb.**	**V orto**	**M memb.**	**M orto**	**T**
	-87.74	-31.71	-11.12	-20.29	-3.55	-1.40
	17.89	33.59	5.25	63.38	4.05	0.57

Macro	Tipo	Angolo 1-Z (gradi)
3	**Setto**	**0.0**

M_S	**CDC**	**Z**	**N memb.**	**V memb.**	**V orto**	**M memb.**	**M orto**	**T**
		cm	kN	kN	kN	kN m	kN m	kN m
3	1	0.0	-7.20	1.15	-0.01	0.01	0.02	8.68e-04
3	1	1.00e-03	-7.20	1.15	-0.01	0.01	0.02	8.68e-04
3	1	35.83	-79.88	-1.91	-0.86	19.58	0.20	-0.07
3	1	35.84	-79.88	-1.91	-0.86	19.58	0.20	-0.07
3	1	71.67	-80.78	-2.40	-0.82	16.94	-0.09	-0.10
3	1	71.67	-80.78	-2.40	-0.82	16.94	-0.09	-0.10
3	1	107.50	-79.03	-2.41	-0.93	15.52	-0.40	-0.03

3	1	107.50	-79.03	-2.41	-0.93	15.52	-0.40	-0.03
3	1	137.50	-69.69	-2.01	-0.85	13.43	0.12	-0.07
3	1	137.50	-69.69	-2.01	-0.85	13.43	0.12	-0.07
3	1	167.50	-67.67	-2.09	-0.85	12.88	-0.13	-0.08
3	1	167.50	-67.67	-2.09	-0.85	12.88	-0.13	-0.08
3	1	197.50	-65.32	-2.21	-0.98	12.77	-0.40	-0.02
3	1	197.50	-65.32	-2.21	-0.98	12.77	-0.40	-0.02
3	1	227.50	-55.56	-2.28	-0.87	11.75	0.13	-0.08
3	1	227.50	-55.56	-2.28	-0.87	11.75	0.13	-0.08
3	1	257.50	-53.11	-2.36	-0.88	11.83	-0.13	-0.08
3	1	257.50	-53.11	-2.36	-0.88	11.83	-0.13	-0.08
3	1	287.50	-50.45	-2.44	-1.02	12.21	-0.41	-0.03
3	1	287.50	-50.45	-2.44	-1.02	12.21	-0.41	-0.03
3	1	317.50	-40.36	-3.58	-0.85	12.29	0.12	-0.08
3	1	347.50	-37.61	-3.61	-0.86	13.14	-0.13	-0.09
3	1	377.50	-34.71	-3.62	-1.00	14.19	-0.40	-0.04
3	1	405.00	-24.40	-5.11	-1.17	15.35	0.03	-0.09
3	1	432.50	-21.65	-5.18	-1.19	16.84	-0.29	-5.36e-03
3	1	433.97	-20.72	-5.82	-1.19	23.67	-0.31	0.01
3	1	439.58	-4.00	1.49	-0.93	-1.72	-0.29	0.04
3	1	444.68	-4.90	1.28	-0.39	-4.06e-03	-0.15	0.02
3	1	449.79	-3.67	0.23	-0.18	0.33	-0.07	0.01
3	1	454.89	-1.33	-0.22	-0.07	0.07	-0.02	5.56e-03
3	17	0.0	-0.80	0.24	-0.51	1.21e-03	0.19	0.01
3	17	1.00e-03	-0.80	0.24	-0.51	1.21e-03	0.19	0.01
3	17	35.83	-10.15	3.90	-12.56	2.59	3.27	-1.15
3	17	35.84	-10.15	3.90	-12.56	2.59	3.27	-1.15
3	17	71.67	-9.75	4.41	-12.32	2.43	0.65	-1.57
3	17	71.67	-9.75	4.41	-12.32	2.43	0.65	-1.57
3	17	107.50	-8.56	4.03	-13.59	1.38	-3.84	-0.66
3	17	107.50	-8.56	4.03	-13.59	1.38	-3.84	-0.66
3	17	137.50	-7.13	3.14	-12.27	1.09	3.68	-1.09
3	17	137.50	-7.13	3.14	-12.27	1.09	3.68	-1.09
3	17	167.50	-6.96	2.98	-12.23	1.18	-0.09	-1.31
3	17	167.50	-6.96	2.98	-12.23	1.18	-0.09	-1.31
3	17	197.50	-6.88	2.78	-13.27	1.33	-3.75	-0.54
3	17	197.50	-6.88	2.78	-13.27	1.33	-3.75	-0.54
3	17	227.50	-5.81	2.12	-12.38	1.38	3.73	-1.08
3	17	227.50	-5.81	2.12	-12.38	1.38	3.73	-1.08
3	17	257.50	-5.76	1.97	-12.33	1.47	-0.04	-1.32
3	17	257.50	-5.76	1.97	-12.33	1.47	-0.04	-1.32
3	17	287.50	-5.71	1.76	-12.19	1.55	-3.74	-0.55
3	17	287.50	-5.71	1.76	-12.19	1.55	-3.74	-0.55
3	17	317.50	-4.61	1.36	-12.26	1.58	3.72	-1.08
3	17	347.50	-4.50	1.34	-12.23	1.51	0.04	-1.36
3	17	377.50	-4.38	1.39	-12.18	1.44	-3.63	-0.68
3	17	405.00	-3.42	2.46	-19.18	1.62	3.20	-1.29
3	17	432.50	-0.13	3.11	-19.37	-2.53	-2.10	-0.35
3	17	433.97	-1.57	2.55	-18.46	-0.78	-5.53	0.10
3	17	439.58	-2.12	2.06	-13.11	0.13	-4.24	0.38
3	17	444.68	-1.29	1.48	-3.96	-0.24	-1.62	0.19
3	17	449.79	-1.05	0.98	-0.94	-0.10	-0.57	0.11
3	17	454.89	-0.70	0.52	0.61	-0.02	-0.06	0.03
3	20	0.0	-11.07	3.13	0.20	0.02	-0.07	-5.11e-03
3	20	1.00e-03	-11.07	3.13	0.20	0.02	-0.07	-5.11e-03
3	20	35.83	8.05	16.85	4.84	42.34	-1.22	0.44
3	20	35.84	8.05	16.85	4.84	42.34	-1.22	0.44
3	20	71.67	-3.29	27.68	4.74	48.05	-0.26	0.60
3	20	71.67	-3.29	27.68	4.74	48.05	-0.26	0.60
3	20	107.50	-2.33	28.53	4.59	38.57	1.41	0.25
3	20	107.50	-2.33	28.53	4.59	38.57	1.41	0.25
3	20	137.50	-2.69	23.73	4.71	30.38	-1.41	0.43
3	20	137.50	-2.69	23.73	4.71	30.38	-1.41	0.43
3	20	167.50	-2.61	23.79	4.73	24.76	-3.28e-04	0.52
3	20	167.50	-2.61	23.79	4.73	24.76	-3.28e-04	0.52
3	20	197.50	-2.03	23.40	4.69	19.81	1.42	0.22
3	20	197.50	-2.03	23.40	4.69	19.81	1.42	0.22
3	20	227.50	-0.19	21.68	4.79	14.53	-1.44	0.43
3	20	227.50	-0.19	21.68	4.79	14.53	-1.44	0.43
3	20	257.50	0.91	21.52	4.80	10.43	-6.21e-03	0.52
3	20	257.50	0.91	21.52	4.80	10.43	-6.21e-03	0.52
3	20	287.50	4.12	20.80	4.77	4.31	1.44	0.22
3	20	287.50	4.12	20.80	4.77	4.31	1.44	0.22
3	20	317.50	5.68	19.93	4.77	-0.18	-1.46	0.43
3	20	347.50	7.03	19.44	4.80	-4.05	-0.03	0.54
3	20	377.50	8.23	18.52	4.81	-8.17	1.41	0.27
3	20	405.00	9.40	17.33	7.51	-13.13	-1.26	0.51
3	20	432.50	9.07	16.95	7.68	-16.66	0.82	0.14
3	20	433.97	9.23	16.15	7.29	-21.16	2.17	-0.04

3	20	439.58	-10.94	6.05	5.19	10.24	1.67	-0.15
3	20	444.68	0.57	3.05	1.57	0.20	0.64	-0.07
3	20	449.79	0.57	2.17	0.37	0.11	0.22	-0.04
3	20	454.89	0.45	0.89	-0.25	-4.75e-03	0.02	-0.01

M_S			**N memb.**	**V memb.**	**V orto**	**M memb.**	**M orto**	**T**
			-80.78	-5.82	-19.37	-21.16	-5.53	-1.57
			9.40	28.53	7.68	48.05	3.73	0.60

Macro	Tipo	Angolo 1-Z (gradi)
4	**Setto**	**0.0**

M_S	**CDC**	**Z**	**N memb.**	**V memb.**	**V orto**	**M memb.**	**M orto**	**T**
		cm	kN	kN	kN	kN m	kN m	kN m
4	1	0.0	-7.28	1.18	-6.87e-03	0.01	7.42e-03	5.33e-04
4	1	2.00e-03	-7.28	1.18	-6.87e-03	0.01	7.42e-03	5.33e-04
4	1	35.83	-79.72	-1.94	-0.35	19.57	0.08	-0.04
4	1	35.84	-79.72	-1.94	-0.35	19.57	0.08	-0.04
4	1	71.67	-80.62	-2.43	-0.34	16.95	-0.04	-0.05
4	1	71.67	-80.62	-2.43	-0.34	16.95	-0.04	-0.05
4	1	107.50	-78.86	-2.43	-0.37	15.56	-0.16	-0.01
4	1	107.50	-78.86	-2.43	-0.37	15.56	-0.16	-0.01
4	1	137.50	-69.52	-1.96	-0.33	13.50	0.05	-0.03
4	1	137.50	-69.52	-1.96	-0.33	13.50	0.05	-0.03
4	1	167.50	-67.47	-2.04	-0.33	12.97	-0.05	-0.03
4	1	167.50	-67.47	-2.04	-0.33	12.97	-0.05	-0.03
4	1	197.50	-65.09	-2.15	-0.36	12.87	-0.15	-0.01
4	1	197.50	-65.09	-2.15	-0.36	12.87	-0.15	-0.01
4	1	227.50	-55.30	-2.15	-0.33	11.87	0.05	-0.03
4	1	227.50	-55.30	-2.15	-0.33	11.87	0.05	-0.03
4	1	257.50	-52.82	-2.22	-0.33	11.95	-0.05	-0.04
4	1	257.50	-52.82	-2.22	-0.33	11.95	-0.05	-0.04
4	1	287.50	-50.14	-2.28	-0.36	12.31	-0.15	-0.01
4	1	287.50	-50.14	-2.28	-0.36	12.31	-0.15	-0.01
4	1	317.50	-40.01	-3.40	-0.32	12.38	0.05	-0.03
4	1	347.50	-37.24	-3.43	-0.32	13.20	-0.05	-0.04
4	1	377.50	-34.35	-3.41	-0.36	14.19	-0.15	-0.02
4	1	405.00	-24.03	-4.86	-0.46	15.29	0.02	-0.04
4	1	432.50	-21.29	-4.91	-0.46	16.69	-0.11	-0.01
4	1	433.97	-20.35	-5.55	-0.46	23.41	-0.12	6.85e-05
4	1	439.58	-3.81	1.69	-0.37	-1.73	-0.12	0.01
4	1	444.68	-4.81	1.35	-0.15	0.05	-0.06	7.45e-03
4	1	449.79	-3.59	0.22	-0.06	0.36	-0.03	4.22e-03
4	1	454.89	-1.26	-0.27	-0.01	0.07	-6.39e-03	1.78e-03
4	17	0.0	-0.29	0.09	-0.54	4.39e-04	0.21	0.01
4	17	2.00e-03	-0.29	0.09	-0.54	4.39e-04	0.21	0.01
4	17	35.83	-3.29	1.39	-13.31	0.87	3.50	-1.20
4	17	35.84	-3.29	1.39	-13.31	0.87	3.50	-1.20
4	17	71.67	-3.13	1.58	-13.09	0.81	0.69	-1.66
4	17	71.67	-3.13	1.58	-13.09	0.81	0.69	-1.66
4	17	107.50	-2.69	1.46	-14.52	0.42	-4.10	-0.70
4	17	107.50	-2.69	1.46	-14.52	0.42	-4.10	-0.70
4	17	137.50	-2.21	1.18	-14.40	0.28	3.97	-1.16
4	17	137.50	-2.21	1.18	-14.40	0.28	3.97	-1.16
4	17	167.50	-2.16	1.14	-13.13	0.30	-0.08	-1.39
4	17	167.50	-2.16	1.14	-13.13	0.30	-0.08	-1.39
4	17	197.50	-2.15	1.08	-14.29	0.36	-4.04	-0.58
4	17	197.50	-2.15	1.08	-14.29	0.36	-4.04	-0.58
4	17	227.50	-1.82	0.85	-14.58	0.37	4.03	-1.15
4	17	227.50	-1.82	0.85	-14.58	0.37	4.03	-1.15
4	17	257.50	-1.83	0.80	-13.30	0.41	-0.04	-1.41
4	17	257.50	-1.83	0.80	-13.30	0.41	-0.04	-1.41
4	17	287.50	-1.84	0.72	-14.40	0.45	-4.05	-0.58
4	17	287.50	-1.84	0.72	-14.40	0.45	-4.05	-0.58
4	17	317.50	-1.52	0.46	-13.14	0.46	4.01	-1.15
4	17	347.50	-1.51	0.43	-13.11	0.42	0.01	-1.44
4	17	377.50	-1.49	0.31	-14.23	0.39	-3.94	-0.69
4	17	405.00	-1.22	0.85	-19.57	0.46	3.24	-1.28
4	17	432.50	-1.32	1.02	-19.70	0.34	-2.17	-0.32
4	17	433.97	-0.49	0.89	-18.72	-0.36	-5.66	0.12
4	17	439.58	-0.70	0.70	-13.32	-0.02	-4.34	0.41
4	17	444.68	-0.41	0.52	-3.97	-0.17	-1.66	0.21
4	17	449.79	-0.43	0.37	-0.85	-0.06	-0.58	0.13
4	17	454.89	-0.31	0.21	0.75	-0.01	-0.05	0.04
4	20	0.0	-10.61	3.00	0.21	0.02	-0.08	-5.45e-03
4	20	2.00e-03	-10.61	3.00	0.21	0.02	-0.08	-5.45e-03

4	20	35.83	7.62	14.91	5.18	40.78	-1.31	0.47
4	20	35.84	7.62	14.91	5.18	40.78	-1.31	0.47
4	20	71.67	-3.23	25.37	5.08	46.25	-0.28	0.64
4	20	71.67	-3.23	25.37	5.08	46.25	-0.28	0.64
4	20	107.50	-2.44	24.96	4.92	37.33	1.51	0.27
4	20	107.50	-2.44	24.96	4.92	37.33	1.51	0.27
4	20	137.50	-2.81	22.39	5.03	29.54	-1.50	0.46
4	20	137.50	-2.81	22.39	5.03	29.54	-1.50	0.46
4	20	167.50	-2.70	22.48	5.06	24.19	1.85e-03	0.55
4	20	167.50	-2.70	22.48	5.06	24.19	1.85e-03	0.55
4	20	197.50	-2.18	22.17	5.01	19.48	1.52	0.23
4	20	197.50	-2.18	22.17	5.01	19.48	1.52	0.23
4	20	227.50	-0.42	20.76	5.12	14.40	-1.54	0.46
4	20	227.50	-0.42	20.76	5.12	14.40	-1.54	0.46
4	20	257.50	0.65	20.66	5.14	10.40	-4.66e-03	0.56
4	20	257.50	0.65	20.66	5.14	10.40	-4.66e-03	0.56
4	20	287.50	3.96	20.02	5.09	4.26	1.54	0.23
4	20	287.50	3.96	20.02	5.09	4.26	1.54	0.23
4	20	317.50	5.24	19.34	5.06	0.17	-1.54	0.46
4	20	347.50	6.47	18.94	5.11	-3.58	-0.02	0.57
4	20	377.50	7.65	18.12	5.09	-7.63	1.51	0.27
4	20	405.00	8.81	17.46	7.54	-12.43	-1.25	0.50
4	20	432.50	8.53	16.86	7.72	-15.98	0.84	0.13
4	20	433.97	8.65	16.14	7.24	-20.31	2.19	-0.04
4	20	439.58	-10.67	6.35	5.13	9.79	1.67	-0.16
4	20	444.68	0.42	3.27	1.47	0.16	0.63	-0.08
4	20	449.79	0.44	2.30	0.26	0.09	0.21	-0.04
4	20	454.89	0.36	0.96	-0.35	-6.69e-03	0.01	-0.01
M_S			**N memb.**	**V memb.**	**V orto**	**M memb.**	**M orto**	**T**
			-80.62	-5.55	-19.70	-20.31	-5.66	-1.66
			8.81	25.37	7.72	46.25	4.03	0.64

Macro	Tipo	Angolo 1-Z (gradi)
5	**Setto**	**0.0**

M_S	**CDC**	**Z**	**N memb.**	**V memb.**	**V orto**	**M memb.**	**M orto**	**T**
		cm	kN	kN	kN	kN m	kN m	kN m
5	1	0.0	-78.52	0.49	0.25	23.72	-0.11	-3.67e-03
5	1	2.00e-03	-78.52	0.49	0.25	23.72	-0.11	-3.67e-03
5	1	35.83	-81.62	-1.86	0.15	19.96	-0.03	0.01
5	1	35.83	-81.62	-1.86	0.15	19.96	-0.03	0.01
5	1	35.83	-81.62	-1.86	0.15	19.96	-0.03	0.01
5	1	71.67	-81.01	-2.50	0.15	17.03	0.02	0.02
5	1	71.67	-81.01	-2.50	0.15	17.03	0.02	0.02
5	1	107.50	-79.26	-2.51	0.19	15.66	0.08	5.61e-03
5	1	107.50	-79.26	-2.51	0.19	15.66	0.08	5.61e-03
5	1	137.50	-70.03	-2.10	0.13	13.65	-0.02	7.34e-03
5	1	167.50	-68.00	-2.19	0.13	13.14	0.02	8.98e-03
5	1	197.50	-65.64	-2.30	0.18	13.07	0.06	4.90e-03
5	1	197.50	-65.64	-2.30	0.18	13.07	0.06	4.90e-03
5	1	227.50	-56.00	-2.15	0.18	12.10	-0.02	0.01
5	1	257.50	-53.52	-2.22	0.19	12.18	0.04	9.60e-03
5	1	287.50	-50.84	-2.28	0.24	12.54	0.10	1.65e-03
5	1	287.50	-50.84	-2.28	0.24	12.54	0.10	1.65e-03
5	1	317.50	-40.63	-3.24	0.21	12.48	-0.04	0.01
5	1	347.50	-37.83	-3.27	0.21	13.30	0.03	0.01
5	1	377.50	-34.90	-3.25	0.26	14.28	0.10	3.32e-03
5	1	405.00	-24.39	-4.68	0.25	15.34	-9.23e-03	0.01
5	1	432.50	-21.63	-4.73	0.26	16.73	0.06	2.69e-03
5	1	433.97	-20.69	-5.37	0.26	23.53	0.06	-3.54e-03
5	1	439.58	-4.08	1.88	0.22	-1.69	0.07	-0.01
5	1	444.68	-4.99	1.49	0.10	0.06	0.04	-6.35e-03
5	1	449.79	-3.71	0.32	0.06	0.37	0.02	-3.71e-03
5	1	454.89	-1.30	-0.22	0.04	0.08	7.57e-03	-1.74e-03
5	17	0.0	4.17	-1.62	-15.62	-1.84	5.68	0.32
5	17	2.00e-03	4.17	-1.62	-15.62	-1.84	5.68	0.32
5	17	35.83	4.11	-1.62	-15.62	-1.75	5.68	-0.95
5	17	35.83	4.11	-1.62	-15.62	-1.75	5.68	-0.95
5	17	35.83	4.11	-1.62	-15.62	-1.75	5.68	-0.95
5	17	71.67	3.12	-1.57	-13.10	-0.83	0.69	-1.66
5	17	71.67	3.12	-1.57	-13.10	-0.83	0.69	-1.66
5	17	107.50	2.64	-1.44	-14.53	-0.40	-4.10	-0.69
5	17	107.50	2.64	-1.44	-14.53	-0.40	-4.10	-0.69
5	17	137.50	2.09	-1.11	-14.36	-0.24	3.96	-1.15
5	17	167.50	2.01	-1.07	-13.09	-0.23	-0.08	-1.39

5	17	197.50	1.97	-1.00	-14.25	-0.26	-4.02	-0.58
5	17	197.50	1.97	-1.00	-14.25	-0.26	-4.02	-0.58
5	17	227.50	1.73	-0.80	-14.51	-0.29	4.03	-1.15
5	17	257.50	1.75	-0.75	-13.24	-0.30	-0.04	-1.42
5	17	287.50	1.78	-0.68	-14.36	-0.27	-4.01	-0.59
5	17	287.50	1.78	-0.68	-14.36	-0.27	-4.01	-0.59
5	17	317.50	1.77	-0.45	-13.04	-0.66	3.96	-1.15
5	17	347.50	1.75	-0.50	-13.02	-0.58	1.81e-03	-1.44
5	17	377.50	1.71	-0.45	-14.15	-0.52	-3.93	-0.69
5	17	405.00	1.27	-0.94	-19.57	-0.55	3.24	-1.28
5	17	432.50	1.68	-1.03	-19.71	-0.79	-2.17	-0.32
5	17	433.97	0.61	-1.00	-18.73	0.35	-5.66	0.12
5	17	439.58	0.82	-0.81	-13.32	7.41e-04	-4.34	0.41
5	17	444.68	0.52	-0.60	-3.96	0.12	-1.66	0.21
5	17	449.79	0.44	-0.41	-0.85	0.06	-0.58	0.13
5	17	454.89	0.32	-0.23	0.74	0.01	-0.05	0.04
5	19	0.0	0.38	24.60	-4.74	53.52	1.99	0.12
5	19	2.00e-03	0.38	24.60	-4.74	53.52	1.99	0.12
5	19	35.83	-5.38	24.60	-4.74	55.31	1.99	-0.36
5	19	35.83	-5.38	24.60	-4.74	55.31	1.99	-0.36
5	19	35.83	-5.38	24.60	-4.74	55.31	1.99	-0.36
5	19	71.67	-3.42	25.30	-4.92	46.34	0.27	-0.62
5	19	71.67	-3.42	25.30	-4.92	46.34	0.27	-0.62
5	19	107.50	-2.68	24.87	-4.77	37.48	-1.46	-0.26
5	19	107.50	-2.68	24.87	-4.77	37.48	-1.46	-0.26
5	19	137.50	-3.10	22.25	-4.86	29.74	1.45	-0.44
5	19	167.50	-2.95	22.34	-4.88	24.41	-7.87e-04	-0.53
5	19	197.50	-2.45	22.04	-4.84	19.73	-1.47	-0.22
5	19	197.50	-2.45	22.04	-4.84	19.73	-1.47	-0.22
5	19	227.50	-0.68	21.10	-4.92	14.67	1.48	-0.44
5	19	257.50	0.44	21.02	-4.94	10.62	0.01	-0.54
5	19	287.50	3.91	20.39	-4.90	4.35	-1.47	-0.23
5	19	287.50	3.91	20.39	-4.90	4.35	-1.47	-0.23
5	19	317.50	5.15	19.70	-4.86	0.16	1.47	-0.45
5	19	347.50	6.48	19.31	-4.91	-3.60	0.01	-0.56
5	19	377.50	7.72	18.48	-4.89	-7.68	-1.46	-0.26
5	19	405.00	8.83	17.57	-7.26	-12.49	1.21	-0.49
5	19	432.50	8.57	16.98	-7.45	-16.04	-0.81	-0.12
5	19	433.97	8.71	16.25	-6.99	-20.37	-2.11	0.04
5	19	439.58	-10.63	6.45	-4.94	9.76	-1.61	0.15
5	19	444.68	0.43	3.37	-1.41	0.15	-0.60	0.07
5	19	449.79	0.44	2.38	-0.24	0.08	-0.20	0.04
5	19	454.89	0.34	1.00	0.34	-8.80e-03	-0.01	9.27e-03

M_S	**N memb.**	**V memb.**	**V orto**	**M memb.**	**M orto**	**T**
	-81.62	-5.37	-19.71	-20.37	-5.66	-1.66
	8.83	25.30	0.74	55.31	5.68	0.41

Macro	Tipo	Angolo 1-Z (gradi)
6	**Setto**	**0.0**

M_S	**CDC**	**Z**	**N memb.**	**V memb.**	**V orto**	**M memb.**	**M orto**	**T**
		cm	kN	kN	kN	kN m	kN m	kN m
6	1	0.0	-7.08	1.13	5.41e-03	0.01	-0.01	-4.71e-04
6	1	3.00e-03	-7.08	1.13	5.41e-03	0.01	-0.01	-4.71e-04
6	1	35.83	-79.68	-2.06	0.63	19.28	-0.15	0.05
6	1	35.84	-79.68	-2.06	0.63	19.28	-0.15	0.05
6	1	71.67	-80.58	-2.56	0.59	16.69	0.07	0.07
6	1	71.67	-80.58	-2.56	0.59	16.69	0.07	0.07
6	1	107.50	-78.86	-2.57	0.69	15.31	0.29	0.02
6	1	107.50	-78.86	-2.57	0.69	15.31	0.29	0.02
6	1	137.50	-69.59	-2.15	0.63	13.22	-0.09	0.05
6	1	137.50	-69.59	-2.15	0.63	13.22	-0.09	0.05
6	1	167.50	-67.59	-2.24	0.63	12.69	0.10	0.05
6	1	167.50	-67.59	-2.24	0.63	12.69	0.10	0.05
6	1	197.50	-65.26	-2.36	0.75	12.59	0.30	0.02
6	1	197.50	-65.26	-2.36	0.75	12.59	0.30	0.02
6	1	227.50	-55.62	-2.42	0.64	11.55	-0.09	0.05
6	1	227.50	-55.62	-2.42	0.64	11.55	-0.09	0.05
6	1	257.50	-53.20	-2.50	0.65	11.64	0.10	0.06
6	1	257.50	-53.20	-2.50	0.65	11.64	0.10	0.06
6	1	287.50	-50.56	-2.59	0.77	12.03	0.31	0.02
6	1	287.50	-50.56	-2.59	0.77	12.03	0.31	0.02
6	1	317.50	-40.65	-3.74	0.63	12.03	-0.09	0.06
6	1	347.50	-37.91	-3.78	0.64	12.93	0.10	0.06
6	1	377.50	-35.01	-3.79	0.77	14.03	0.31	0.03

6	1	405.00	-24.63	-5.32	0.83	15.27	-0.02	0.06
6	1	432.50	-21.88	-5.38	0.84	16.81	0.21	-1.74e-03
6	1	433.97	-20.96	-6.03	0.84	23.72	0.23	-0.01
6	1	439.58	-4.14	1.36	0.66	-1.81	0.21	-0.03
6	1	444.68	-5.07	1.21	0.29	-0.02	0.11	-0.01
6	1	449.79	-3.80	0.19	0.15	0.34	0.05	-8.86e-03
6	1	454.89	-1.38	-0.22	0.07	0.07	0.02	-4.39e-03
6	17	0.0	0.81	-0.24	-0.51	-1.23e-03	0.19	0.01
6	17	3.00e-03	0.81	-0.24	-0.51	-1.23e-03	0.19	0.01
6	17	35.83	10.24	-3.92	-12.56	-2.61	3.27	-1.15
6	17	35.84	10.24	-3.92	-12.56	-2.61	3.27	-1.15
6	17	71.67	9.83	-4.44	-12.32	-2.44	0.65	-1.57
6	17	71.67	9.83	-4.44	-12.32	-2.44	0.65	-1.57
6	17	107.50	8.60	-4.05	-13.59	-1.36	-3.84	-0.66
6	17	107.50	8.60	-4.05	-13.59	-1.36	-3.84	-0.66
6	17	137.50	7.15	-3.16	-12.28	-1.07	3.68	-1.09
6	17	137.50	7.15	-3.16	-12.28	-1.07	3.68	-1.09
6	17	167.50	6.98	-3.00	-12.24	-1.15	-0.09	-1.31
6	17	167.50	6.98	-3.00	-12.24	-1.15	-0.09	-1.31
6	17	197.50	6.90	-2.79	-13.28	-1.30	-3.76	-0.54
6	17	197.50	6.90	-2.79	-13.28	-1.30	-3.76	-0.54
6	17	227.50	5.83	-2.14	-12.29	-1.36	3.71	-1.08
6	17	227.50	5.83	-2.14	-12.29	-1.36	3.71	-1.08
6	17	257.50	5.78	-1.99	-12.24	-1.45	-0.04	-1.32
6	17	257.50	5.78	-1.99	-12.24	-1.45	-0.04	-1.32
6	17	287.50	5.73	-1.79	-12.04	-1.53	-3.69	-0.54
6	17	287.50	5.73	-1.79	-12.04	-1.53	-3.69	-0.54
6	17	317.50	4.65	-1.44	-12.30	-1.57	3.73	-1.08
6	17	347.50	4.54	-1.42	-12.30	-1.49	0.04	-1.36
6	17	377.50	4.42	-1.47	-12.24	-1.43	-3.66	-0.68
6	17	405.00	3.45	-2.50	-19.07	-1.63	3.17	-1.29
6	17	432.50	0.11	-3.16	-19.27	2.56	-2.10	-0.35
6	17	433.97	1.57	-2.58	-18.38	0.80	-5.51	0.10
6	17	439.58	2.14	-2.11	-13.04	-0.14	-4.22	0.38
6	17	444.68	1.29	-1.51	-3.92	0.24	-1.61	0.19
6	17	449.79	1.05	-1.01	-0.93	0.11	-0.57	0.11
6	17	454.89	0.70	-0.54	0.61	0.02	-0.06	0.03
6	19	0.0	-11.07	3.13	-0.19	0.02	0.07	4.95e-03
6	19	3.00e-03	-11.07	3.13	-0.19	0.02	0.07	4.95e-03
6	19	35.83	7.87	16.77	-4.68	42.39	1.18	-0.43
6	19	35.84	7.87	16.77	-4.68	42.39	1.18	-0.43
6	19	71.67	-3.43	27.59	-4.59	48.07	0.26	-0.58
6	19	71.67	-3.43	27.59	-4.59	48.07	0.26	-0.58
6	19	107.50	-2.52	28.43	-4.44	38.67	-1.36	-0.25
6	19	107.50	-2.52	28.43	-4.44	38.67	-1.36	-0.25
6	19	137.50	-2.90	23.59	-4.56	30.53	1.36	-0.41
6	19	137.50	-2.90	23.59	-4.56	30.53	1.36	-0.41
6	19	167.50	-2.79	23.65	-4.58	24.94	-1.25e-03	-0.50
6	19	167.50	-2.79	23.65	-4.58	24.94	-1.25e-03	-0.50
6	19	197.50	-2.21	23.27	-4.55	20.03	-1.38	-0.21
6	19	197.50	-2.21	23.27	-4.55	20.03	-1.38	-0.21
6	19	227.50	-0.40	21.73	-4.60	14.80	1.39	-0.41
6	19	227.50	-0.40	21.73	-4.60	14.80	1.39	-0.41
6	19	257.50	0.73	21.59	-4.62	10.69	9.37e-03	-0.51
6	19	257.50	0.73	21.59	-4.62	10.69	9.37e-03	-0.51
6	19	287.50	4.19	20.92	-4.56	4.38	-1.37	-0.21
6	19	287.50	4.19	20.92	-4.56	4.38	-1.37	-0.21
6	19	317.50	5.53	20.77	-4.63	0.03	1.42	-0.41
6	19	347.50	6.96	20.32	-4.67	-3.91	0.03	-0.52
6	19	377.50	8.26	19.38	-4.68	-8.14	-1.38	-0.26
6	19	405.00	9.42	18.00	-7.22	-13.13	1.21	-0.49
6	19	432.50	9.11	17.32	-7.39	-16.72	-0.79	-0.14
6	19	433.97	9.32	16.51	-7.02	-21.24	-2.09	0.04
6	19	439.58	-10.86	6.38	-4.99	10.19	-1.61	0.14
6	19	444.68	0.61	3.33	-1.50	0.17	-0.61	0.07
6	19	449.79	0.58	2.37	-0.35	0.09	-0.21	0.04
6	19	454.89	0.44	1.00	0.24	-9.12e-03	-0.02	0.01

M_S	**N memb.**	**V memb.**	**V orto**	**M memb.**	**M orto**	**T**
	-80.58	-6.03	-19.27	-21.24	-5.51	-1.57
	10.24	28.43	0.84	48.07	3.73	0.38

Macro	Tipo	Angolo 1-Z (gradi)
7	**Setto**	**0.0**

M_S	**CDC**	**Z**	**N memb.**	**V memb.**	**V orto**	**M memb.**	**M orto**	**T**

		cm	kN	kN	kN	kN m	kN m	kN m
7	1	0.0	-4.90	0.73	-0.03	8.51e-03	-6.46e-04	2.97e-03
7	1	4.00e-03	-4.90	0.73	-0.03	8.51e-03	-6.46e-04	2.97e-03
7	1	35.83	-84.77	-0.51	1.57	0.55	-0.37	0.04
7	1	35.84	-84.77	-0.51	1.57	0.55	-0.37	0.04
7	1	71.67	-82.45	-1.06	1.16	1.60	0.12	0.04
7	1	71.67	-82.45	-1.06	1.16	1.60	0.12	0.04
7	1	107.50	-78.25	-1.20	1.13	2.92	0.53	6.17e-03
7	1	107.50	-78.25	-1.20	1.13	2.92	0.53	6.17e-03
7	1	137.50	-68.95	0.54	1.07	3.14	-0.14	0.07
7	1	137.50	-68.95	0.54	1.07	3.14	-0.14	0.07
7	1	167.50	-65.22	0.50	1.04	4.03	0.18	0.08
7	1	167.50	-65.22	0.50	1.04	4.03	0.18	0.08
7	1	197.50	-61.50	0.34	1.03	4.93	0.49	0.02
7	1	197.50	-61.50	0.34	1.03	4.93	0.49	0.02
7	1	227.50	-52.34	1.23	1.14	4.95	-0.16	0.08
7	1	227.50	-52.34	1.23	1.14	4.95	-0.16	0.08
7	1	257.50	-48.56	1.19	1.10	5.69	0.17	0.09
7	1	257.50	-48.56	1.19	1.10	5.69	0.17	0.09
7	1	287.50	-44.83	1.06	1.11	6.40	0.51	0.03
7	1	287.50	-44.83	1.06	1.11	6.40	0.51	0.03
7	1	317.50	-35.68	1.23	1.13	6.30	-0.17	0.09
7	1	347.50	-31.96	1.22	1.13	6.98	0.17	0.12
7	1	377.50	-28.31	1.18	1.23	7.56	0.52	0.11
7	1	405.00	-19.36	2.58	2.68	6.81	0.15	0.16
7	1	432.50	-16.17	2.52	2.64	6.77	0.88	-0.33
7	1	433.97	-14.66	2.21	2.55	11.36	0.94	-0.23
7	1	439.58	-5.43	6.00	1.77	-2.48	0.66	-0.18
7	1	444.68	-6.27	4.10	0.45	-0.17	0.20	-0.06
7	1	449.79	-4.50	2.27	0.14	0.06	0.08	-0.02
7	1	454.89	-2.09	0.90	-0.07	-0.05	3.17e-03	-8.33e-03
7	17	0.0	-2.74	0.89	-0.37	4.29e-03	0.15	8.78e-03
7	17	4.00e-03	-2.74	0.89	-0.37	4.29e-03	0.15	8.78e-03
7	17	35.83	13.11	27.67	-8.68	12.70	2.64	-0.95
7	17	35.84	13.11	27.67	-8.68	12.70	2.64	-0.95
7	17	71.67	13.05	31.71	-8.53	13.62	0.86	-1.40
7	17	71.67	13.05	31.71	-8.53	13.62	0.86	-1.40
7	17	107.50	22.26	31.23	-8.26	2.44	-2.19	-0.92
7	17	107.50	22.26	31.23	-8.26	2.44	-2.19	-0.92
7	17	137.50	9.71	30.89	-5.95	-3.12	1.66	-1.05
7	17	137.50	9.71	30.89	-5.95	-3.12	1.66	-1.05
7	17	167.50	6.27	30.94	-5.95	-4.28	-0.17	-1.12
7	17	167.50	6.27	30.94	-5.95	-4.28	-0.17	-1.12
7	17	197.50	6.89	30.48	-5.81	-9.35	-1.92	-0.71
7	17	197.50	6.89	30.48	-5.81	-9.35	-1.92	-0.71
7	17	227.50	-2.10	28.63	-6.22	-7.12	1.88	-1.00
7	17	227.50	-2.10	28.63	-6.22	-7.12	1.88	-1.00
7	17	257.50	5.39	28.61	-6.22	-7.74	-0.07	-1.13
7	17	257.50	5.39	28.61	-6.22	-7.74	-0.07	-1.13
7	17	287.50	9.95	28.10	-6.00	-10.11	-1.81	-0.73
7	17	287.50	9.95	28.10	-6.00	-10.11	-1.81	-0.73
7	17	317.50	0.98	25.58	-6.30	-6.87	1.93	-1.01
7	17	347.50	6.87	25.42	-6.32	-8.53	-8.27e-04	-1.17
7	17	377.50	10.44	24.69	-6.31	-11.30	-1.85	-0.88
7	17	405.00	3.58	15.16	-10.86	-7.84	1.38	-1.23
7	17	432.50	5.01	14.52	-11.06	-7.80	-1.63	-0.38
7	17	433.97	5.21	12.62	-10.61	-8.53	-3.54	-0.03
7	17	439.58	0.24	8.20	-6.99	-0.40	-2.58	0.15
7	17	444.68	1.17	5.51	-1.80	-1.54	-0.89	9.81e-03
7	17	449.79	-0.54	4.53	-0.42	-0.43	-0.31	-4.77e-03
7	17	454.89	-0.84	2.53	0.28	-0.04	-0.03	-0.02
7	19	0.0	-11.11	3.18	-0.15	0.02	0.07	5.77e-03
7	19	4.00e-03	-11.11	3.18	-0.15	0.02	0.07	5.77e-03
7	19	35.83	17.71	21.77	-3.74	48.08	1.27	-0.33
7	19	35.84	17.71	21.77	-3.74	48.08	1.27	-0.33
7	19	71.67	8.69	33.21	-3.80	52.81	0.46	-0.55
7	19	71.67	8.69	33.21	-3.80	52.81	0.46	-0.55
7	19	107.50	9.55	32.59	-3.67	42.83	-0.88	-0.37
7	19	107.50	9.55	32.59	-3.67	42.83	-0.88	-0.37
7	19	137.50	4.69	31.40	-2.52	35.86	0.69	-0.41
7	19	137.50	4.69	31.40	-2.52	35.86	0.69	-0.41
7	19	167.50	5.91	31.32	-2.40	28.53	-0.05	-0.44
7	19	167.50	5.91	31.32	-2.40	28.53	-0.05	-0.44
7	19	197.50	7.53	30.87	-2.27	21.67	-0.76	-0.27
7	19	197.50	7.53	30.87	-2.27	21.67	-0.76	-0.27
7	19	227.50	3.34	28.90	-2.50	17.59	0.76	-0.39
7	19	227.50	3.34	28.90	-2.50	17.59	0.76	-0.39
7	19	257.50	4.60	28.63	-2.48	12.10	0.02	-0.44
7	19	257.50	4.60	28.63	-2.48	12.10	0.02	-0.44

7	19	287.50	10.06	27.93	-2.34	4.58	-0.71	-0.28
7	19	287.50	10.06	27.93	-2.34	4.58	-0.71	-0.28
7	19	317.50	6.76	26.03	-2.35	1.66	0.75	-0.39
7	19	347.50	7.39	25.48	-2.39	-3.28	0.04	-0.46
7	19	377.50	8.82	24.49	-2.41	-8.69	-0.68	-0.38
7	19	405.00	6.54	17.99	-4.99	-10.24	0.52	-0.51
7	19	432.50	7.01	17.36	-5.15	-13.11	-0.87	0.02
7	19	433.97	7.13	16.32	-5.02	-16.58	-1.75	0.06
7	19	439.58	-9.54	6.86	-3.27	9.80	-1.21	0.15
7	19	444.68	2.32	4.85	-0.70	-1.15	-0.35	0.01
7	19	449.79	0.52	3.38	-0.20	-0.18	-0.13	3.29e-04
7	19	454.89	-4.96e-03	1.57	0.12	-0.03	-0.01	-5.91e-03

M_S	**N memb.**	**V memb.**	**V orto**	**M memb.**	**M orto**	**T**
	-84.77	-1.20	-11.06	-16.58	-3.54	-1.40
	22.26	33.21	2.68	52.81	2.64	0.16

Macro	Tipo	Angolo 1-Z (gradi)
8	**Setto**	**0.0**

M_S	**CDC**	**Z**	**N memb.**	**V memb.**	**V orto**	**M memb.**	**M orto**	**T**
		cm	kN	kN	kN	kN m	kN m	kN m
8	1	0.0	-74.76	3.75	-1.57	24.91	0.70	-0.02
8	1	35.83	-77.89	1.42	-1.02	20.00	0.24	-0.08
8	1	71.67	-77.55	0.74	-1.06	15.72	-0.13	-0.09
8	1	107.50	-75.97	0.68	-1.39	13.12	-0.55	-2.31e-03
8	1	137.50	-66.91	-0.48	-1.29	10.34	0.19	-0.10
8	1	167.50	-64.84	-0.57	-1.30	9.48	-0.19	-0.10
8	1	197.50	-62.40	-0.74	-1.54	9.12	-0.61	-7.98e-03
8	1	227.50	-52.55	-0.83	-1.30	7.70	0.19	-0.11
8	1	257.50	-50.01	-0.90	-1.31	7.54	-0.20	-0.12
8	1	287.50	-47.26	-1.03	-1.52	7.67	-0.61	-0.01
8	1	317.50	-36.99	-0.51	-1.40	6.66	0.19	-0.13
8	1	347.50	-34.21	-0.55	-1.41	6.71	-0.23	-0.13
8	1	377.50	-31.29	-0.60	-1.61	6.95	-0.68	4.44e-03
8	1	405.00	-20.88	-0.46	-1.55	6.51	0.05	-0.04
8	1	432.50	-18.10	-0.54	-1.57	6.84	-0.38	-0.03
8	1	439.58	-16.20	-2.29	-1.66	11.24	-0.51	0.10
8	1	444.68	-4.63	0.61	-0.52	-0.12	-0.19	0.03
8	1	449.79	-3.68	0.27	-0.26	0.23	-0.10	0.02
8	1	454.89	-1.46	-0.07	-0.09	0.04	-0.03	8.39e-03
8	17	0.0	1.48	-8.91	-10.84	-9.36	4.50	0.16
8	17	35.83	1.04	-8.91	-10.84	-10.26	4.50	-0.92
8	17	71.67	-2.54	-9.93	-10.86	-6.83	0.52	-1.51
8	17	107.50	-10.51	-9.66	-10.76	1.88	-3.43	-0.44
8	17	137.50	-7.89	-7.88	-11.41	0.17	3.41	-1.07
8	17	167.50	-7.07	-7.78	-11.36	-0.10	-0.08	-1.31
8	17	197.50	-5.10	-7.45	-11.28	1.76	-3.43	-0.39
8	17	227.50	-1.88	0.28	-11.12	3.45	3.33	-1.06
8	17	257.50	-2.47	1.41	-11.10	3.32	-0.06	-1.30
8	17	287.50	-3.03	2.92	-10.99	3.42	-3.32	-0.40
8	17	317.50	-2.25	3.16	-11.68	2.97	3.45	-1.12
8	17	347.50	-2.38	3.01	-11.65	2.61	-0.07	-1.35
8	17	377.50	-3.15	2.76	-11.62	1.66	-3.55	-0.25
8	17	405.00	-2.73	3.60	-13.59	1.22	2.56	-0.33
8	17	432.50	-3.13	3.93	-13.89	0.83	-1.21	-0.74
8	17	439.58	-1.26	4.07	-12.98	-1.19	-3.75	0.26
8	17	444.68	-2.29	3.06	-2.94	0.31	-1.41	0.17
8	17	449.79	-1.31	1.72	-1.06	0.14	-0.49	0.07
8	17	454.89	-0.47	0.72	0.54	0.01	-0.05	0.02
8	18	0.0	1.72	-8.54	-12.07	-9.38	4.34	0.15
8	18	35.83	1.29	-8.54	-12.07	-10.27	4.35	-0.89
8	18	71.67	-2.47	-9.73	-10.47	-6.72	0.50	-1.46
8	18	107.50	-10.59	-9.44	-10.39	2.14	-3.31	-0.42
8	18	137.50	-8.04	-7.69	-11.01	0.46	3.29	-1.03
8	18	167.50	-7.25	-7.59	-10.97	0.17	-0.07	-1.27
8	18	197.50	-5.30	-6.52	-10.90	1.88	-3.31	-0.37
8	18	227.50	-4.24	1.60	-10.73	1.74	3.22	-1.02
8	18	257.50	-2.58	4.45	-10.73	3.25	-0.05	-1.26
8	18	287.50	-3.08	4.24	-10.63	3.32	-3.20	-0.39
8	18	317.50	-2.27	3.01	-11.27	2.84	3.34	-1.08
8	18	347.50	-2.38	2.85	-11.27	2.52	-0.06	-1.30
8	18	377.50	-3.81	2.60	-11.26	1.21	-3.43	-0.24
8	18	405.00	-2.70	3.32	-13.17	1.18	2.49	-0.32
8	18	432.50	-3.16	3.67	-13.48	0.87	-1.17	-0.72
8	18	439.58	-1.18	3.80	-12.62	-1.22	-3.64	0.25

8	18	444.68	-2.25	2.88	-2.85	0.32	-1.37	0.17
8	18	449.79	-1.28	1.61	-1.03	0.13	-0.48	0.07
8	18	454.89	-0.46	0.68	0.52	0.01	-0.05	0.02
8	20	0.0	-6.49	25.97	4.18	55.20	-1.72	-0.08
8	20	35.83	-11.92	25.97	4.18	56.85	-1.72	0.35
8	20	71.67	-9.22	27.24	4.24	47.39	-0.21	0.58
8	20	107.50	-8.26	26.94	4.25	39.11	1.31	0.17
8	20	137.50	-8.83	22.85	4.72	31.82	-1.43	0.42
8	20	167.50	-7.67	22.84	4.67	26.56	-0.02	0.52
8	20	197.50	-6.51	22.36	4.69	21.70	1.39	0.15
8	20	227.50	-5.37	18.96	4.49	17.14	-1.35	0.42
8	20	257.50	-4.18	18.70	4.48	13.52	-0.01	0.52
8	20	287.50	-3.78	17.87	4.47	9.80	1.34	0.16
8	20	317.50	-2.80	12.87	4.71	7.13	-1.40	0.45
8	20	347.50	-2.03	12.24	4.71	4.94	6.45e-03	0.54
8	20	377.50	0.64	11.18	4.74	1.43	1.43	0.11
8	20	405.00	0.48	5.34	5.62	0.29	-1.04	0.14
8	20	432.50	0.75	4.48	5.77	-0.82	0.52	0.30
8	20	439.58	0.62	3.72	5.48	-1.19	1.58	-0.15
8	20	444.68	-1.84	0.23	1.20	2.33	0.56	-0.06
8	20	449.79	1.59	1.53	0.51	-0.30	0.21	-0.03
8	20	454.89	0.38	0.54	-0.17	-4.04e-03	0.03	-8.80e-03

M_S	**N memb.**	**V memb.**	**V orto**	**M memb.**	**M orto**	**T**
	-77.89	-9.93	-13.89	-10.27	-3.75	-1.51
	1.72	27.24	5.77	56.85	4.50	0.58

Macro	Tipo	Angolo 1-Z (gradi)
9	**Setto**	**0.0**

M_S	**CDC**	**Z**	**N memb.**	**V memb.**	**V orto**	**M memb.**	**M orto**	**T**
		cm	kN	kN	kN	kN m	kN m	kN m
9	1	0.0	-78.56	4.78	-1.35	28.36	0.64	0.03
9	1	35.83	-81.47	2.56	-0.97	23.37	0.23	-0.07
9	1	71.67	-80.77	1.92	-0.96	19.13	-0.11	-0.11
9	1	107.50	-78.93	1.86	-1.16	16.42	-0.48	-0.01
9	1	137.50	-69.34	0.64	-1.12	13.44	0.17	-0.09
9	1	167.50	-67.21	0.54	-1.13	12.31	-0.17	-0.10
9	1	197.50	-64.76	0.35	-1.34	11.65	-0.53	-0.01
9	1	227.50	-54.76	-0.34	-1.15	9.97	0.17	-0.10
9	1	257.50	-52.24	-0.43	-1.16	9.64	-0.17	-0.11
9	1	287.50	-49.51	-0.57	-1.36	9.60	-0.55	-0.02
9	1	317.50	-39.19	-0.93	-1.19	8.64	0.16	-0.11
9	1	347.50	-36.43	-0.98	-1.20	8.79	-0.19	-0.12
9	1	377.50	-33.51	-1.04	-1.40	9.16	-0.57	-3.63e-03
9	1	405.00	-22.89	-1.62	-1.19	8.95	0.05	-0.04
9	1	432.50	-20.10	-1.69	-1.22	9.60	-0.28	-0.04
9	1	439.58	-18.36	-3.96	-1.27	14.62	-0.38	0.05
9	1	444.68	-3.87	0.60	-0.49	-0.46	-0.18	0.03
9	1	449.79	-3.66	0.32	-0.23	0.23	-0.09	0.02
9	1	454.89	-1.47	-0.09	-0.08	0.05	-0.03	6.99e-03
9	17	0.0	-20.06	-1.28	-13.23	9.29	4.78	0.23
9	17	35.83	-19.64	-1.28	-13.23	8.96	4.79	-0.91
9	17	71.67	-13.92	0.58	-11.31	3.50	0.56	-1.54
9	17	107.50	-11.34	5.54e-03	-11.17	1.32	-3.53	-0.46
9	17	137.50	-8.74	3.93	-11.59	0.72	3.46	-1.08
9	17	167.50	-8.32	3.58	-11.56	0.87	-0.08	-1.31
9	17	197.50	-8.13	3.07	-11.47	1.15	-3.53	-0.37
9	17	227.50	-6.60	2.90	-11.60	1.26	3.47	-1.07
9	17	257.50	-6.50	2.71	-11.58	1.46	-0.05	-1.32
9	17	287.50	-5.94	2.30	-11.47	2.18	-3.49	-0.39
9	17	317.50	-4.53	2.15	-11.98	2.00	3.56	-1.12
9	17	347.50	-4.39	2.12	-11.99	1.79	-0.05	-1.35
9	17	377.50	-4.51	2.08	-11.97	1.24	-3.63	-0.26
9	17	405.00	-2.78	2.76	-14.39	0.94	2.69	-0.34
9	17	432.50	-4.14	3.39	-14.74	1.47	-1.31	-0.78
9	17	439.58	-6.31	3.25	-13.74	2.94	-4.01	0.30
9	17	444.68	-2.39	2.31	-3.27	0.40	-1.55	0.21
9	17	449.79	-1.14	1.30	-1.14	-3.00e-03	-0.54	0.10
9	17	454.89	-0.59	0.60	0.60	-7.05e-03	-0.05	0.03
9	20	0.0	-1.99	24.84	4.13	54.17	-1.72	-0.09
9	20	35.83	-7.74	24.84	4.13	55.85	-1.72	0.35
9	20	71.67	-5.51	25.52	4.31	46.28	-0.23	0.59
9	20	107.50	-5.13	24.88	4.16	37.64	1.29	0.18
9	20	137.50	-7.87	21.33	4.57	30.64	-1.37	0.43
9	20	167.50	-6.59	21.30	4.57	25.35	-1.07e-03	0.52

9	20	197.50	-5.61	20.86	4.58	20.61	1.38	0.15
9	20	227.50	-4.74	17.80	4.61	16.20	-1.39	0.42
9	20	257.50	-3.67	17.55	4.62	12.78	-9.05e-03	0.52
9	20	287.50	-2.51	16.77	4.62	9.67	1.38	0.15
9	20	317.50	-2.33	12.89	4.83	6.59	-1.44	0.45
9	20	347.50	0.04	12.30	4.85	2.64	2.72e-03	0.54
9	20	377.50	1.88	11.30	4.90	0.10	1.47	0.10
9	20	405.00	1.14	7.07	5.80	-0.75	-1.09	0.13
9	20	432.50	1.72	5.84	5.97	-2.38	0.52	0.30
9	20	439.58	1.37	5.47	5.64	-3.13	1.63	-0.12
9	20	444.68	-3.71	0.53	1.39	3.38	0.63	-0.08
9	20	449.79	1.44	1.82	0.52	-0.20	0.23	-0.04
9	20	454.89	0.45	0.75	-0.20	-2.56e-03	0.03	-0.01

M_S	**N memb.**	**V memb.**	**V orto**	**M memb.**	**M orto**	**T**
	-81.47	-3.96	-14.74	-3.13	-4.01	-1.54
	1.88	25.52	5.97	55.85	4.79	0.59

Macro	Tipo	Angolo 1-Z (gradi)
10	**Setto**	**0.0**

M_S	**CDC**	**Z**	**N memb.**	**V memb.**	**V orto**	**M memb.**	**M orto**	**T**
		cm	kN	kN	kN	kN m	kN m	kN m
10	1	0.0	-78.14	3.92	-1.38	27.17	0.68	0.06
10	1	35.83	-81.05	1.67	-1.03	22.48	0.25	-0.07
10	1	71.67	-80.34	1.04	-1.01	18.58	-0.11	-0.12
10	1	107.50	-78.46	1.00	-1.16	16.24	-0.50	-0.02
10	1	137.50	-68.80	0.59	-1.06	13.43	0.16	-0.09
10	1	167.50	-66.61	0.49	-1.07	12.40	-0.16	-0.09
10	1	197.50	-64.10	0.32	-1.24	11.82	-0.50	-0.01
10	1	227.50	-54.02	0.16	-1.06	10.12	0.16	-0.09
10	1	257.50	-51.43	0.08	-1.07	9.72	-0.16	-0.10
10	1	287.50	-48.66	-0.05	-1.25	9.60	-0.50	-0.02
10	1	317.50	-38.25	-0.09	-1.03	8.48	0.15	-0.10
10	1	347.50	-35.43	-0.13	-1.05	8.45	-0.16	-0.11
10	1	377.50	-32.47	-0.18	-1.22	8.61	-0.50	-0.01
10	1	405.00	-21.86	-0.52	-0.98	8.19	0.04	-0.03
10	1	432.50	-19.05	-0.60	-1.01	8.58	-0.23	-0.05
10	1	439.58	-17.24	-2.67	-1.03	13.23	-0.30	0.02
10	1	444.68	-4.06	1.07	-0.51	-0.35	-0.19	0.03
10	1	449.79	-3.67	0.53	-0.23	0.25	-0.09	0.02
10	1	454.89	-1.45	-0.03	-0.09	0.06	-0.03	7.13e-03
10	17	0.0	-17.16	5.29	-13.70	7.31	4.95	0.25
10	17	35.83	-16.79	5.29	-13.70	7.04	4.95	-0.92
10	17	71.67	-12.54	5.02	-11.66	2.98	0.57	-1.57
10	17	107.50	-10.64	4.12	-12.85	1.41	-3.66	-0.46
10	17	137.50	-8.66	3.43	-11.89	1.05	3.56	-1.09
10	17	167.50	-8.36	3.27	-11.85	1.19	-0.08	-1.33
10	17	197.50	-8.18	2.70	-11.74	1.40	-3.62	-0.37
10	17	227.50	-6.78	2.33	-11.87	1.47	3.55	-1.08
10	17	257.50	-6.66	2.17	-11.84	1.60	-0.05	-1.33
10	17	287.50	-6.56	1.84	-11.73	1.69	-3.57	-0.39
10	17	317.50	-5.08	1.62	-12.23	1.61	3.64	-1.13
10	17	347.50	-4.89	1.58	-12.24	1.48	-0.05	-1.37
10	17	377.50	-4.69	1.58	-12.22	1.32	-3.72	-0.26
10	17	405.00	-3.27	2.52	-14.69	1.23	2.75	-0.34
10	17	432.50	-2.98	3.19	-15.03	0.93	-1.33	-0.79
10	17	439.58	-2.63	2.73	-13.99	1.09	-4.09	0.30
10	17	444.68	-0.50	2.14	-3.35	-0.82	-1.58	0.21
10	17	449.79	-1.22	1.14	-1.15	-0.03	-0.55	0.10
10	17	454.89	-0.67	0.56	0.63	-0.01	-0.05	0.03
10	20	0.0	-0.45	24.24	4.28	53.05	-1.78	-0.09
10	20	35.83	-6.20	24.24	4.28	54.75	-1.78	0.35
10	20	71.67	-4.07	24.95	4.44	45.38	-0.23	0.59
10	20	107.50	-3.82	24.28	4.29	36.86	1.33	0.18
10	20	137.50	-5.71	20.52	4.60	29.46	-1.38	0.43
10	20	167.50	-5.47	20.47	4.61	24.70	-3.31e-03	0.52
10	20	197.50	-4.57	20.05	4.60	20.04	1.39	0.15
10	20	227.50	-3.87	17.11	4.63	15.67	-1.40	0.43
10	20	257.50	-2.89	16.87	4.65	12.34	-0.01	0.53
10	20	287.50	-1.83	16.12	4.65	9.32	1.39	0.16
10	20	317.50	-1.86	12.53	4.80	6.29	-1.44	0.45
10	20	347.50	0.32	11.96	4.84	2.58	-2.30e-03	0.54
10	20	377.50	2.06	11.00	4.89	0.11	1.46	0.11
10	20	405.00	1.62	6.78	5.80	-1.03	-1.09	0.14
10	20	432.50	2.20	5.64	5.98	-2.67	0.53	0.31

10	20	439.58	1.80	4.90	5.60	-3.48	1.63	-0.12
10	20	444.68	-3.73	6.04e-03	1.37	3.47	0.63	-0.08
10	20	449.79	1.54	1.40	0.48	-0.21	0.22	-0.04
10	20	454.89	0.49	0.68	-0.23	-1.05e-03	0.02	-0.01

M_S	**N memb.**	**V memb.**	**V orto**	**M memb.**	**M orto**	**T**
	-81.05	-2.67	-15.03	-3.48	-4.09	-1.57
	2.20	24.95	5.98	54.75	4.95	0.59

Macro	Tipo	Angolo 1-Z (gradi)
11	**Setto**	**0.0**

M_S	**CDC**	**Z**	**N memb.**	**V memb.**	**V orto**	**M memb.**	**M orto**	**T**
		cm	kN	kN	kN	kN m	kN m	kN m
11	1	0.0	-75.23	1.70	-1.33	23.02	0.67	0.07
11	1	35.83	-78.17	-0.57	-1.02	19.07	0.24	-0.07
11	1	71.67	-77.49	-1.19	-1.00	15.94	-0.11	-0.12
11	1	107.50	-75.65	-1.21	-1.13	14.34	-0.49	-0.02
11	1	137.50	-66.01	-0.48	-1.04	11.84	0.15	-0.08
11	1	167.50	-63.85	-0.55	-1.04	11.10	-0.16	-0.09
11	1	197.50	-61.38	-0.68	-1.19	10.77	-0.49	-7.45e-03
11	1	227.50	-51.10	0.21	-1.05	9.00	0.15	-0.09
11	1	257.50	-48.51	0.15	-1.06	8.59	-0.16	-0.09
11	1	287.50	-45.74	0.05	-1.23	8.44	-0.50	-0.01
11	1	317.50	-34.93	1.18	-1.08	6.81	0.15	-0.10
11	1	347.50	-32.08	1.15	-1.09	6.44	-0.18	-0.10
11	1	377.50	-29.12	1.12	-1.26	6.22	-0.52	0.02
11	1	405.00	-17.89	2.21	-0.92	4.53	0.08	-0.02
11	1	432.50	-15.07	2.14	-0.94	4.17	-0.18	-0.06
11	1	439.58	-13.04	0.83	-0.95	7.56	-0.25	-6.97e-03
11	1	444.68	-5.08	1.79	-0.56	0.06	-0.20	0.02
11	1	449.79	-3.85	0.71	-0.24	0.32	-0.09	0.02
11	1	454.89	-1.44	0.02	-0.09	0.06	-0.03	8.16e-03
11	17	0.0	-14.40	4.83	-13.98	5.99	5.05	0.26
11	17	35.83	-14.11	4.83	-13.98	5.76	5.05	-0.92
11	17	71.67	-10.70	4.67	-11.86	2.52	0.58	-1.59
11	17	107.50	-9.22	4.26	-13.09	1.30	-3.73	-0.46
11	17	137.50	-7.83	3.23	-12.08	1.03	3.62	-1.10
11	17	167.50	-7.59	3.08	-12.04	1.16	-0.08	-1.34
11	17	197.50	-7.47	2.70	-13.06	1.36	-3.68	-0.37
11	17	227.50	-6.53	2.15	-12.05	1.47	3.64	-1.09
11	17	257.50	-6.44	2.00	-12.01	1.61	-0.05	-1.35
11	17	287.50	-6.36	1.65	-11.89	1.72	-3.62	-0.40
11	17	317.50	-5.45	1.26	-12.53	1.85	3.70	-1.16
11	17	347.50	-5.29	1.09	-12.52	1.85	-0.06	-1.40
11	17	377.50	-5.10	0.75	-12.49	1.83	-3.83	-0.23
11	17	405.00	-3.43	2.19	-14.97	1.24	2.81	-0.32
11	17	432.50	-3.16	2.37	-15.30	0.98	-1.34	-0.76
11	17	439.58	-2.78	2.35	-14.23	1.22	-4.15	0.31
11	17	444.68	-0.48	2.09	-3.40	-0.84	-1.61	0.22
11	17	449.79	-1.20	1.17	-1.16	-0.05	-0.57	0.10
11	17	454.89	-0.70	0.59	0.65	-0.02	-0.06	0.03
11	20	0.0	0.30	23.52	4.45	51.42	-1.84	-0.09
11	20	35.83	-5.33	23.52	4.45	53.11	-1.84	0.36
11	20	71.67	-3.22	24.25	4.60	44.02	-0.23	0.60
11	20	107.50	-2.96	23.61	4.45	35.78	1.39	0.17
11	20	137.50	-5.15	20.17	4.78	28.82	-1.43	0.43
11	20	167.50	-4.81	20.14	4.79	24.12	-1.07e-03	0.53
11	20	197.50	-3.91	19.73	4.78	19.53	1.44	0.14
11	20	227.50	-3.51	16.91	4.83	15.42	-1.46	0.43
11	20	257.50	-2.54	16.69	4.85	12.11	-9.06e-03	0.54
11	20	287.50	-1.49	15.96	4.85	9.09	1.45	0.15
11	20	317.50	-1.87	12.10	5.13	6.31	-1.52	0.47
11	20	347.50	0.14	11.55	5.16	2.81	0.02	0.56
11	20	377.50	1.80	10.62	5.21	0.40	1.58	0.07
11	20	405.00	0.16	4.64	5.93	0.44	-1.16	0.11
11	20	432.50	0.46	3.65	6.09	-0.65	0.49	0.29
11	20	439.58	0.27	3.27	5.70	-0.95	1.62	-0.06
11	20	444.68	-2.06	-0.19	1.52	2.57	0.69	-0.10
11	20	449.79	1.69	1.23	0.50	-0.27	0.24	-0.05
11	20	454.89	0.47	0.52	-0.25	1.95e-03	0.02	-0.01

M_S	**N memb.**	**V memb.**	**V orto**	**M memb.**	**M orto**	**T**
	-78.17	-1.21	-15.30	-0.95	-4.15	-1.59
	1.80	24.25	6.09	53.11	5.05	0.60

Macro	Tipo	Angolo 1-Z (gradi)
12	**Setto**	**0.0**

M_S	CDC	Z	N memb.	V memb.	V orto	M memb.	M orto	T
		cm	kN	kN	kN	kN m	kN m	kN m
12	1	0.0	-75.73	1.87	-0.83	24.15	0.40	-8.79e-03
12	1	35.83	-78.73	-0.43	-0.61	20.08	0.14	-0.06
12	1	71.67	-78.09	-1.06	-0.59	16.84	-0.08	-0.07
12	1	107.50	-76.29	-1.07	-0.69	15.15	-0.30	-0.02
12	1	137.50	-66.60	-0.30	-0.66	12.60	0.10	-0.07
12	1	167.50	-64.43	-0.37	-0.67	11.81	-0.10	-0.07
12	1	197.50	-61.95	-0.49	-0.77	11.45	-0.31	-0.02
12	1	227.50	-51.59	0.44	-0.68	9.66	0.10	-0.07
12	1	257.50	-48.96	0.38	-0.69	9.22	-0.10	-0.08
12	1	287.50	-46.16	0.30	-0.79	9.03	-0.32	-0.02
12	1	317.50	-35.23	1.45	-0.66	7.39	0.10	-0.07
12	1	347.50	-32.34	1.43	-0.67	6.98	-0.10	-0.08
12	1	377.50	-29.34	1.42	-0.78	6.72	-0.32	-0.02
12	1	405.00	-18.07	2.46	-1.02	5.08	4.96e-03	-0.04
12	1	432.50	-15.23	2.40	-1.03	4.67	-0.28	-0.02
12	1	439.58	-13.22	1.00	-1.10	8.09	-0.37	0.08
12	1	444.68	-4.91	2.04	-0.25	0.02	-0.10	0.02
12	1	449.79	-3.82	0.83	-0.12	0.34	-0.05	5.81e-03
12	1	454.89	-1.41	0.03	-0.04	0.07	-0.02	2.99e-03
12	17	0.0	-10.15	3.68	-14.48	4.07	5.22	0.28
12	17	35.83	-10.05	3.68	-14.48	3.89	5.23	-0.94
12	17	71.67	-8.04	3.57	-12.20	1.95	0.60	-1.62
12	17	107.50	-7.29	3.23	-13.51	1.24	-3.85	-0.47
12	17	137.50	-5.81	2.44	-13.60	0.95	3.75	-1.13
12	17	167.50	-5.72	2.31	-12.43	0.99	-0.08	-1.38
12	17	197.50	-5.67	2.13	-13.50	1.05	-3.81	-0.38
12	17	227.50	-4.35	1.49	-12.46	0.92	3.77	-1.12
12	17	257.50	-4.30	1.38	-12.41	0.87	-0.05	-1.39
12	17	287.50	-4.23	1.22	-13.42	0.80	-3.75	-0.41
12	17	317.50	-2.80	1.55	-12.92	0.48	3.85	-1.19
12	17	347.50	-0.94	1.64	-12.89	-1.47	-0.07	-1.43
12	17	377.50	-1.29	1.73	-12.84	-1.37	-3.96	-0.23
12	17	405.00	-1.04	2.03	-15.24	-0.69	2.85	-0.32
12	17	432.50	-0.87	2.23	-15.39	-1.15	-1.38	-0.76
12	17	439.58	-0.20	2.14	-14.43	-1.19	-4.23	0.33
12	17	444.68	-1.04	0.96	-3.44	-0.11	-1.64	0.22
12	17	449.79	-0.66	0.85	-1.15	-0.21	-0.58	0.10
12	17	454.89	-0.67	0.47	0.70	-0.02	-0.06	0.03
12	20	0.0	0.40	22.32	4.48	50.48	-1.88	-0.12
12	20	35.83	-5.13	22.32	4.48	52.16	-1.88	0.36
12	20	71.67	-3.07	23.69	4.66	43.29	-0.25	0.63
12	20	107.50	-2.83	23.05	4.50	35.25	1.39	0.19
12	20	137.50	-5.17	19.65	4.64	28.48	-1.39	0.44
12	20	167.50	-4.90	19.63	4.66	23.92	-7.95e-04	0.54
12	20	197.50	-4.03	19.24	4.61	19.45	1.40	0.16
12	20	227.50	-3.92	16.36	4.64	15.50	-1.40	0.44
12	20	257.50	-2.98	16.16	4.66	12.30	-0.01	0.55
12	20	287.50	-1.94	15.45	4.61	9.38	1.38	0.17
12	20	317.50	-2.56	11.35	4.78	6.82	-1.43	0.46
12	20	347.50	-1.87	10.82	4.81	4.86	-3.03e-03	0.56
12	20	377.50	-0.46	9.93	4.80	2.26	1.45	0.12
12	20	405.00	-0.37	4.38	5.90	1.00	-1.07	0.14
12	20	432.50	-0.34	3.61	6.07	0.14	0.58	0.31
12	20	439.58	-0.40	2.81	5.66	0.02	1.68	-0.18
12	20	444.68	-1.44	-0.14	1.19	2.14	0.59	-0.07
12	20	449.79	1.61	1.26	0.40	-0.24	0.21	-0.03
12	20	454.89	0.47	0.54	-0.29	3.42e-03	0.02	-8.60e-03

M_S			N memb.	V memb.	V orto	M memb.	M orto	T
			-78.73	-1.07	-15.39	-1.47	-4.23	-1.62
			1.61	23.69	6.07	52.16	5.23	0.63

Macro	Tipo	Angolo 1-Z (gradi)
13	**Setto**	**0.0**

M_S	CDC	Z	N memb.	V memb.	V orto	M memb.	M orto	T
		cm	kN	kN	kN	kN m	kN m	kN m
13	1	0.0	-79.10	4.20	-0.77	29.29	0.37	-3.37e-03
13	1	35.83	-82.10	1.89	-0.57	24.39	0.13	-0.06

13	1	71.67	-81.47	1.26	-0.56	20.31	-0.07	-0.07
13	1	107.50	-79.64	1.24	-0.65	17.83	-0.29	-0.01
13	1	137.50	-69.98	1.03	-0.64	14.93	0.09	-0.06
13	1	167.50	-67.74	0.95	-0.64	13.83	-0.10	-0.07
13	1	197.50	-65.18	0.79	-0.74	13.17	-0.30	-0.01
13	1	227.50	-54.99	0.77	-0.68	11.44	0.10	-0.07
13	1	257.50	-52.31	0.70	-0.68	10.99	-0.11	-0.07
13	1	287.50	-49.44	0.59	-0.79	10.78	-0.32	-0.01
13	1	317.50	-38.90	0.56	-0.71	9.66	0.10	-0.07
13	1	347.50	-35.97	0.53	-0.72	9.57	-0.11	-0.07
13	1	377.50	-32.92	0.50	-0.82	9.64	-0.34	1.21e-03
13	1	405.00	-22.20	0.12	-0.92	9.20	0.03	-0.03
13	1	432.50	-19.32	0.06	-0.94	9.49	-0.22	-0.03
13	1	439.58	-17.54	-2.19	-0.99	14.16	-0.30	0.06
13	1	444.68	-3.76	1.69	-0.29	-0.42	-0.11	0.02
13	1	449.79	-3.63	0.84	-0.14	0.28	-0.05	7.87e-03
13	1	454.89	-1.41	0.04	-0.05	0.07	-0.02	3.93e-03
13	17	0.0	-8.81	3.30	-14.73	3.68	5.31	0.29
13	17	35.83	-8.73	3.30	-14.73	3.52	5.31	-0.95
13	17	71.67	-6.87	3.19	-12.39	1.75	0.61	-1.64
13	17	107.50	-6.17	2.88	-13.73	1.10	-3.92	-0.48
13	17	137.50	-5.13	2.19	-13.86	0.85	3.83	-1.14
13	17	167.50	-5.03	2.08	-12.66	0.89	-0.08	-1.40
13	17	197.50	-4.98	1.92	-13.76	0.97	-3.88	-0.39
13	17	227.50	-4.12	1.33	-12.75	0.92	3.85	-1.13
13	17	257.50	-4.08	1.22	-12.69	0.91	-0.05	-1.41
13	17	287.50	-4.03	1.08	-13.73	0.89	-3.85	-0.40
13	17	317.50	-3.15	1.00	-13.08	0.78	3.91	-1.19
13	17	347.50	-3.04	1.02	-13.05	0.56	-0.05	-1.44
13	17	377.50	-2.90	1.08	-12.99	0.32	-4.00	-0.26
13	17	405.00	-0.82	1.52	-15.28	-0.78	2.85	-0.33
13	17	432.50	-0.67	1.34	-15.43	-1.11	-1.39	-0.79
13	17	439.58	-0.25	1.46	-14.59	-0.84	-4.25	0.33
13	17	444.68	-0.68	0.80	-3.49	-0.28	-1.66	0.23
13	17	449.79	-0.61	0.82	-1.15	-0.20	-0.58	0.11
13	17	454.89	-0.62	0.45	0.72	-0.02	-0.06	0.04
13	20	0.0	-0.35	22.64	4.63	51.46	-1.93	-0.12
13	20	35.83	-5.96	22.64	4.63	53.13	-1.93	0.37
13	20	71.67	-3.91	22.61	4.80	44.13	-0.25	0.64
13	20	107.50	-3.71	23.33	4.65	35.95	1.44	0.18
13	20	137.50	-5.58	19.58	4.86	28.82	-1.45	0.45
13	20	167.50	-5.40	19.56	4.88	24.25	3.25e-04	0.55
13	20	197.50	-4.58	19.18	4.84	19.77	1.46	0.15
13	20	227.50	-3.95	16.25	4.90	15.55	-1.48	0.45
13	20	257.50	-3.04	16.05	4.92	12.36	-7.04e-03	0.56
13	20	287.50	-2.05	15.37	4.88	9.46	1.47	0.16
13	20	317.50	-2.09	11.84	5.07	6.50	-1.51	0.47
13	20	347.50	0.28	11.34	5.11	2.66	9.78e-03	0.57
13	20	377.50	2.08	10.47	5.10	0.24	1.55	0.10
13	20	405.00	1.31	6.41	5.94	-0.48	-1.12	0.13
13	20	432.50	1.78	5.27	6.11	-1.98	0.54	0.30
13	20	439.58	1.43	5.02	5.67	-2.75	1.65	-0.12
13	20	444.68	-3.13	0.53	1.35	3.06	0.64	-0.08
13	20	449.79	1.43	1.66	0.43	-0.16	0.22	-0.04
13	20	454.89	0.50	0.64	-0.31	2.35e-03	0.02	-0.01

M_S	**N memb.**	**V memb.**	**V orto**	**M memb.**	**M orto**	**T**
	-82.10	-2.19	-15.43	-2.75	-4.25	-1.64
	2.08	23.33	6.11	53.13	5.31	0.64

Macro	Tipo	Angolo 1-Z (gradi)
14	**Setto**	**0.0**

M_S	**CDC**	**Z**	**N memb.**	**V memb.**	**V orto**	**M memb.**	**M orto**	**T**
		cm	kN	kN	kN	kN m	kN m	kN m
14	1	0.0	-80.62	5.12	-0.78	31.40	0.39	0.03
14	1	35.83	-83.64	2.81	-0.61	26.16	0.14	-0.06
14	1	71.67	-83.01	2.17	-0.60	21.74	-0.07	-0.08
14	1	107.50	-81.17	2.15	-0.67	18.95	-0.29	-0.01
14	1	137.50	-71.46	1.55	-0.60	15.89	0.09	-0.06
14	1	167.50	-69.19	1.45	-0.60	14.67	-0.09	-0.06
14	1	197.50	-66.60	1.29	-0.68	13.90	-0.28	-8.87e-03
14	1	227.50	-56.35	0.85	-0.60	12.16	0.09	-0.06
14	1	257.50	-53.65	0.78	-0.60	11.71	-0.09	-0.06
14	1	287.50	-50.77	0.66	-0.69	11.51	-0.28	-0.01
14	1	317.50	-40.17	0.19	-0.59	10.49	0.08	-0.06

14	1	347.50	-37.23	0.16	-0.60	10.53	-0.09	-0.06
14	1	377.50	-34.17	0.13	-0.68	10.74	-0.28	-3.62e-03
14	1	405.00	-23.32	-0.53	-0.70	10.45	0.03	-0.02
14	1	432.50	-20.42	-0.59	-0.71	10.94	-0.16	-0.03
14	1	439.58	-18.73	-3.12	-0.74	15.96	-0.22	0.03
14	1	444.68	-3.40	1.66	-0.30	-0.58	-0.11	0.01
14	1	449.79	-3.61	0.87	-0.13	0.28	-0.05	8.72e-03
14	1	454.89	-1.41	0.04	-0.05	0.07	-0.02	3.97e-03
14	17	0.0	-7.97	3.05	-14.93	3.43	5.38	0.29
14	17	35.83	-7.88	3.05	-14.93	3.29	5.38	-0.96
14	17	71.67	-6.02	2.96	-12.54	1.53	0.62	-1.66
14	17	107.50	-5.29	2.70	-13.91	0.87	-3.97	-0.48
14	17	137.50	-4.38	2.11	-14.06	0.65	3.88	-1.15
14	17	167.50	-4.29	2.02	-12.84	0.71	-0.08	-1.41
14	17	197.50	-4.27	1.88	-13.96	0.80	-3.93	-0.39
14	17	227.50	-3.59	1.34	-12.92	0.79	3.91	-1.15
14	17	257.50	-3.58	1.24	-12.86	0.83	-0.05	-1.42
14	17	287.50	-3.57	1.09	-13.92	0.85	-3.90	-0.41
14	17	317.50	-2.85	0.69	-13.24	0.78	3.95	-1.20
14	17	347.50	-2.78	0.64	-13.21	0.65	-0.06	-1.46
14	17	377.50	-2.69	0.59	-13.15	0.51	-4.05	-0.26
14	17	405.00	-1.92	1.30	-15.38	0.38	2.86	-0.33
14	17	432.50	-2.24	1.68	-15.52	0.26	-1.40	-0.79
14	17	439.58	-2.33	1.70	-14.67	0.55	-4.28	0.34
14	17	444.68	-1.43	1.21	-3.49	0.03	-1.66	0.23
14	17	449.79	-0.85	0.73	-1.14	-0.08	-0.59	0.12
14	17	454.89	-0.57	0.40	0.74	-0.02	-0.06	0.04
14	20	0.0	-0.60	22.15	4.68	51.74	-1.95	-0.11
14	20	35.83	-6.23	22.15	4.68	53.41	-1.95	0.37
14	20	71.67	-4.18	22.72	4.86	44.36	-0.25	0.64
14	20	107.50	-3.97	23.44	4.70	36.13	1.46	0.18
14	20	137.50	-5.80	19.67	4.91	28.97	-1.47	0.45
14	20	167.50	-5.65	19.66	4.93	24.39	-3.67e-05	0.56
14	20	197.50	-4.82	19.29	4.90	19.89	1.48	0.16
14	20	227.50	-4.19	16.36	4.96	15.67	-1.49	0.45
14	20	257.50	-3.26	16.17	4.98	12.48	-7.75e-03	0.56
14	20	287.50	-2.25	15.50	4.94	9.56	1.49	0.16
14	20	317.50	-2.29	12.10	5.11	6.63	-1.52	0.47
14	20	347.50	-1.64	11.61	5.15	4.67	9.83e-03	0.58
14	20	377.50	2.08	10.76	5.14	0.14	1.56	0.10
14	20	405.00	1.10	6.81	5.95	-0.44	-1.11	0.13
14	20	432.50	1.59	5.50	6.12	-1.95	0.54	0.30
14	20	439.58	1.24	5.29	5.66	-2.69	1.66	-0.13
14	20	444.68	-3.28	0.64	1.32	3.15	0.64	-0.09
14	20	449.79	1.44	1.77	0.40	-0.17	0.22	-0.04
14	20	454.89	0.50	0.71	-0.33	1.83e-06	0.02	-0.01

M_S	**N memb.**	**V memb.**	**V orto**	**M memb.**	**M orto**	**T**
	-83.64	-3.12	-15.52	-2.69	-4.28	-1.66
	2.08	23.44	6.12	53.41	5.38	0.64

Macro	Tipo	Angolo 1-Z (gradi)
15	**Setto**	**0.0**

M_S	**CDC**	**Z**	**N memb.**	**V memb.**	**V orto**	**M memb.**	**M orto**	**T**
		cm	kN	kN	kN	kN m	kN m	kN m
15	1	0.0	-78.91	4.14	-0.78	29.02	0.41	0.05
15	1	35.83	-81.91	1.83	-0.64	24.15	0.16	-0.05
15	1	71.67	-81.26	1.19	-0.62	20.11	-0.07	-0.09
15	1	107.50	-79.42	1.18	-0.68	17.67	-0.30	-0.01
15	1	137.50	-69.76	0.99	-0.56	14.80	0.08	-0.05
15	1	167.50	-67.51	0.91	-0.55	13.72	-0.08	-0.05
15	1	197.50	-64.94	0.76	-0.61	13.08	-0.26	-6.65e-03
15	1	227.50	-54.75	0.76	-0.53	11.37	0.08	-0.05
15	1	257.50	-52.06	0.69	-0.52	10.92	-0.08	-0.05
15	1	287.50	-49.20	0.58	-0.59	10.71	-0.24	-0.01
15	1	317.50	-38.65	0.56	-0.48	9.59	0.07	-0.05
15	1	347.50	-35.73	0.53	-0.48	9.49	-0.07	-0.05
15	1	377.50	-32.69	0.52	-0.55	9.55	-0.22	-8.52e-03
15	1	405.00	-21.99	0.15	-0.47	9.08	0.03	-0.02
15	1	432.50	-19.12	0.09	-0.48	9.35	-0.10	-0.03
15	1	439.58	-17.34	-2.12	-0.48	13.96	-0.14	-4.43e-03
15	1	444.68	-3.76	1.68	-0.30	-0.38	-0.11	0.01
15	1	449.79	-3.60	0.81	-0.12	0.30	-0.05	9.40e-03
15	1	454.89	-1.38	0.01	-0.05	0.07	-0.01	3.92e-03
15	17	0.0	-7.14	2.78	-15.08	3.17	5.43	0.30

15	17	35.83	-7.03	2.78	-15.08	3.04	5.43	-0.96
15	17	71.67	-5.18	2.72	-12.64	1.31	0.62	-1.67
15	17	107.50	-4.43	2.51	-14.04	0.65	-4.00	-0.48
15	17	137.50	-3.63	2.03	-14.21	0.44	3.92	-1.16
15	17	167.50	-3.54	1.96	-12.97	0.50	-0.08	-1.43
15	17	197.50	-3.54	1.85	-14.11	0.61	-3.98	-0.40
15	17	227.50	-3.02	1.39	-14.26	0.64	3.95	-1.16
15	17	257.50	-3.05	1.31	-13.01	0.72	-0.05	-1.44
15	17	287.50	-3.08	1.13	-14.09	0.80	-3.95	-0.41
15	17	317.50	-2.51	0.63	-13.37	0.76	3.99	-1.21
15	17	347.50	-2.48	0.44	-13.34	0.72	-0.06	-1.47
15	17	377.50	-2.44	0.14	-13.27	0.68	-4.10	-0.26
15	17	405.00	-1.85	1.01	-15.38	0.66	2.86	-0.33
15	17	432.50	-1.81	1.12	-15.50	0.55	-1.41	-0.79
15	17	439.58	-1.55	1.06	-14.60	0.69	-4.28	0.34
15	17	444.68	-0.13	1.21	-3.48	-0.66	-1.67	0.23
15	17	449.79	-0.77	0.65	-1.11	-0.06	-0.59	0.12
15	17	454.89	-0.49	0.35	0.77	-0.02	-0.05	0.04
15	20	0.0	-0.46	21.77	4.71	51.07	-1.96	-0.11
15	20	35.83	-6.02	21.77	4.71	52.73	-1.96	0.38
15	20	71.67	-3.99	22.35	4.89	43.81	-0.25	0.64
15	20	107.50	-3.80	23.07	4.74	35.73	1.47	0.19
15	20	137.50	-5.60	19.42	4.95	28.66	-1.48	0.46
15	20	167.50	-5.42	19.41	4.97	24.12	-8.10e-04	0.56
15	20	197.50	-4.60	19.06	4.95	19.67	1.49	0.16
15	20	227.50	-3.94	16.25	5.00	15.47	-1.50	0.46
15	20	257.50	-3.02	16.07	5.02	12.28	-7.71e-03	0.57
15	20	287.50	-2.01	15.42	4.99	9.37	1.50	0.17
15	20	317.50	-2.02	12.05	5.13	6.42	-1.53	0.48
15	20	347.50	0.30	11.57	5.18	2.60	9.36e-03	0.58
15	20	377.50	2.02	10.74	5.18	0.20	1.57	0.11
15	20	405.00	1.42	6.59	5.92	-0.74	-1.10	0.13
15	20	432.50	1.94	5.50	6.10	-2.31	0.55	0.30
15	20	439.58	1.56	5.23	5.66	-3.11	1.66	-0.13
15	20	444.68	-3.45	0.51	1.29	3.22	0.63	-0.09
15	20	449.79	1.41	1.70	0.37	-0.18	0.21	-0.04
15	20	454.89	0.47	0.67	-0.35	1.16e-03	0.02	-0.01

M_S	**N memb.**	**V memb.**	**V orto**	**M memb.**	**M orto**	**T**
	-81.91	-2.12	-15.50	-3.11	-4.28	-1.67
	2.02	23.07	6.10	52.73	5.43	0.64

Macro	Tipo	Angolo 1-Z (gradi)
16	**Setto**	**0.0**

M_S	**CDC**	**Z**	**N memb.**	**V memb.**	**V orto**	**M memb.**	**M orto**	**T**
		cm	kN	kN	kN	kN m	kN m	kN m
16	1	0.0	-75.41	1.78	-0.69	23.77	0.37	0.06
16	1	35.83	-78.39	-0.53	-0.58	19.75	0.14	-0.04
16	1	71.67	-77.74	-1.16	-0.57	16.57	-0.06	-0.08
16	1	107.50	-75.91	-1.16	-0.62	14.94	-0.27	-9.60e-03
16	1	137.50	-66.26	-0.34	-0.52	12.46	0.07	-0.04
16	1	167.50	-64.07	-0.41	-0.52	11.70	-0.08	-0.05
16	1	197.50	-61.58	-0.52	-0.57	11.36	-0.24	-1.58e-03
16	1	227.50	-51.24	0.45	-0.52	9.61	0.08	-0.04
16	1	257.50	-48.60	0.40	-0.52	9.18	-0.08	-0.05
16	1	287.50	-45.79	0.33	-0.58	9.00	-0.24	-3.45e-03
16	1	317.50	-34.90	1.47	-0.53	7.37	0.07	-0.05
16	1	347.50	-32.01	1.46	-0.53	6.96	-0.09	-0.05
16	1	377.50	-29.02	1.46	-0.59	6.67	-0.25	0.02
16	1	405.00	-17.77	2.54	-0.36	4.98	0.06	-4.22e-04
16	1	432.50	-14.94	2.48	-0.38	4.53	-0.05	-0.03
16	1	439.58	-12.93	1.13	-0.36	7.85	-0.07	-0.03
16	1	444.68	-4.88	2.04	-0.32	0.08	-0.12	0.01
16	1	449.79	-3.76	0.80	-0.13	0.36	-0.05	0.01
16	1	454.89	-1.36	-0.01	-0.04	0.07	-0.01	4.64e-03
16	17	0.0	-5.77	0.24	-15.19	2.66	5.47	0.29
16	17	35.83	-5.67	0.24	-15.19	2.55	5.47	-0.97
16	17	71.67	-4.04	1.25	-12.71	1.05	0.63	-1.68
16	17	107.50	-3.35	2.08	-14.12	0.47	-4.02	-0.48
16	17	137.50	-2.95	1.37	-14.31	0.31	3.95	-1.17
16	17	167.50	-2.85	1.30	-13.05	0.36	-0.08	-1.44
16	17	197.50	-2.83	1.06	-14.20	0.48	-4.00	-0.40
16	17	227.50	-2.74	0.60	-14.33	0.59	3.98	-1.17
16	17	257.50	-2.77	0.52	-13.06	0.71	-0.05	-1.45
16	17	287.50	-2.80	0.43	-14.16	0.83	-3.96	-0.42

16	17	317.50	-2.81	-0.14	-13.53	1.05	4.02	-1.24
16	17	347.50	-2.80	-0.34	-13.50	1.17	-0.08	-1.49
16	17	377.50	-2.77	-0.47	-14.62	1.30	-4.17	-0.24
16	17	405.00	-2.09	0.64	-15.44	0.88	2.88	-0.31
16	17	432.50	-1.92	0.72	-15.56	0.88	-1.41	-0.76
16	17	439.58	-1.73	0.40	-14.68	1.10	-4.29	0.34
16	17	444.68	0.10	1.06	-3.45	-0.69	-1.67	0.24
16	17	449.79	-0.66	0.61	-1.08	-0.04	-0.58	0.12
16	17	454.89	-0.41	0.33	0.79	-0.01	-0.05	0.04
16	20	0.0	0.13	20.82	4.80	49.51	-1.99	-0.10
16	20	35.83	-5.29	20.82	4.80	51.14	-1.99	0.38
16	20	71.67	-3.29	21.65	4.91	42.52	-0.25	0.65
16	20	107.50	-3.11	22.37	4.83	34.71	1.50	0.18
16	20	137.50	-5.14	19.11	5.12	28.06	-1.53	0.46
16	20	167.50	-4.87	19.11	5.14	23.59	1.69e-03	0.57
16	20	197.50	-4.04	18.77	5.11	19.21	1.55	0.15
16	20	227.50	-3.65	16.18	5.18	15.25	-1.56	0.46
16	20	257.50	-2.73	16.02	5.20	12.05	-7.31e-03	0.58
16	20	287.50	-1.71	15.38	5.18	9.12	1.55	0.16
16	20	317.50	-2.00	11.80	5.44	6.40	-1.60	0.50
16	20	347.50	-1.34	11.34	5.48	4.39	0.03	0.60
16	20	377.50	1.71	10.51	5.49	0.47	1.68	0.07
16	20	405.00	0.03	5.07	5.98	0.57	-1.16	0.09
16	20	432.50	0.30	4.14	6.16	-0.52	0.51	0.28
16	20	439.58	0.14	3.87	5.66	-0.87	1.63	-0.07
16	20	444.68	-2.01	0.37	1.43	2.41	0.68	-0.10
16	20	449.79	1.52	1.59	0.39	-0.26	0.23	-0.05
16	20	454.89	0.41	0.57	-0.36	1.74e-03	0.02	-0.01

M_S	**N memb.**	**V memb.**	**V orto**	**M memb.**	**M orto**	**T**
	-78.39	-1.16	-15.56	-0.87	-4.29	-1.68
	1.71	22.37	6.16	51.14	5.47	0.65

Macro	Tipo	Angolo 1-Z (gradi)
17	**Setto**	**0.0**

M_S	**CDC**	**Z**	**N memb.**	**V memb.**	**V orto**	**M memb.**	**M orto**	**T**
		cm	kN	kN	kN	kN m	kN m	kN m
17	1	0.0	-75.58	1.80	-0.12	23.83	0.05	-0.03
17	1	35.83	-78.57	-0.51	-0.09	19.80	0.02	-0.02
17	1	71.67	-77.92	-1.14	-0.09	16.60	-0.02	-0.02
17	1	107.50	-76.11	-1.14	-0.10	14.95	-0.05	-7.01e-03
17	1	137.50	-66.46	-0.29	-0.12	12.43	0.02	-0.03
17	1	167.50	-64.29	-0.37	-0.13	11.64	-0.02	-0.02
17	1	197.50	-61.80	-0.48	-0.13	11.28	-0.06	-9.76e-03
17	1	227.50	-51.45	0.55	-0.14	9.48	0.02	-0.03
17	1	257.50	-48.80	0.51	-0.14	9.04	-0.02	-0.03
17	1	287.50	-45.98	0.44	-0.14	8.84	-0.07	-0.01
17	1	317.50	-35.03	1.53	-0.13	7.22	0.02	-0.02
17	1	347.50	-32.12	1.50	-0.13	6.82	-0.02	-0.03
17	1	377.50	-29.12	1.51	-0.15	6.55	-0.06	-0.02
17	1	405.00	-17.81	2.59	-0.43	4.90	-0.02	-0.03
17	1	432.50	-14.97	2.53	-0.43	4.46	-0.14	-1.04e-03
17	1	439.58	-12.95	1.20	-0.48	7.79	-0.18	0.06
17	1	444.68	-4.94	2.06	1.91e-03	0.08	-4.64e-03	3.17e-03
17	1	449.79	-3.79	0.81	-3.75e-03	0.36	-2.80e-03	-1.99e-03
17	1	454.89	-1.37	-1.17e-03	7.69e-03	0.08	2.58e-05	-6.99e-04
17	17	0.0	-2.32	0.82	-15.39	0.95	5.53	0.30
17	17	35.83	-2.34	0.82	-15.39	0.90	5.54	-0.98
17	17	71.67	-1.99	0.79	-12.85	0.54	0.64	-1.70
17	17	107.50	-1.89	0.70	-14.29	0.38	-4.07	-0.49
17	17	137.50	-1.31	0.54	-14.48	0.25	4.00	-1.19
17	17	167.50	-1.30	0.51	-13.19	0.22	-0.08	-1.45
17	17	197.50	-1.29	0.46	-14.37	0.20	-4.05	-0.40
17	17	227.50	-0.77	0.42	-14.56	0.11	4.04	-1.18
17	17	257.50	-0.20	0.42	-13.26	-0.45	-0.05	-1.47
17	17	287.50	-0.29	0.41	-14.40	-0.45	-4.03	-0.43
17	17	317.50	0.36	0.89	-13.65	-0.58	4.06	-1.25
17	17	347.50	0.38	0.94	-13.63	-0.84	-0.08	-1.51
17	17	377.50	0.38	0.99	-14.78	-1.10	-4.22	-0.24
17	17	405.00	0.45	0.74	-15.49	-0.83	2.88	-0.31
17	17	432.50	0.47	0.74	-15.61	-1.09	-1.42	-0.76
17	17	439.58	0.47	0.73	-14.72	-1.23	-4.31	0.35
17	17	444.68	-0.90	0.02	-3.43	0.30	-1.67	0.24
17	17	449.79	-0.22	0.16	-1.06	-0.06	-0.58	0.12
17	17	454.89	-0.21	0.11	0.82	-7.87e-03	-0.05	0.04

17	20	0.0	0.36	19.44	4.75	48.36	-1.99	-0.13
17	20	35.83	-4.95	19.44	4.75	49.96	-1.99	0.38
17	20	71.67	-3.04	20.10	4.95	41.63	-0.27	0.66
17	20	107.50	-2.88	21.62	4.79	34.08	1.48	0.20
17	20	137.50	-5.12	18.40	4.94	27.67	-1.48	0.47
17	20	167.50	-4.92	18.41	4.97	23.37	-1.56e-03	0.58
17	20	197.50	-4.13	18.08	4.91	19.15	1.49	0.17
17	20	227.50	-4.06	15.87	4.96	15.35	-1.50	0.47
17	20	257.50	-3.15	15.71	4.98	12.21	-0.01	0.58
17	20	287.50	-2.12	15.05	4.92	9.35	1.48	0.18
17	20	317.50	-2.64	11.11	5.05	6.86	-1.50	0.49
17	20	347.50	-1.96	10.66	5.10	4.90	0.02	0.59
17	20	377.50	-0.53	9.85	5.07	2.25	1.55	0.12
17	20	405.00	-0.51	5.12	5.93	1.05	-1.07	0.14
17	20	432.50	-0.51	3.90	6.12	0.15	0.59	0.31
17	20	439.58	-0.54	3.75	5.62	-0.02	1.69	-0.18
17	20	444.68	-1.53	0.70	1.12	2.02	0.59	-0.08
17	20	449.79	1.41	1.72	0.31	-0.25	0.20	-0.03
17	20	454.89	0.35	0.63	-0.38	-1.02e-03	0.01	-8.92e-03

M_S	**N memb.**	**V memb.**	**V orto**	**M memb.**	**M orto**	**T**
	-78.57	-1.14	-15.61	-1.23	-4.31	-1.70
	1.41	21.62	6.12	49.96	5.54	0.66

Macro	Tipo	Angolo 1-Z (gradi)
18	**Setto**	**0.0**

M_S	**CDC**	**Z**	**N memb.**	**V memb.**	**V orto**	**M memb.**	**M orto**	**T**
		cm	kN	kN	kN	kN m	kN m	kN m
18	1	0.0	-78.97	4.10	-0.03	29.11	0.01	-0.02
18	1	35.83	-81.94	1.80	-0.03	24.30	5.80e-04	-0.02
18	1	71.67	-81.24	1.16	-0.03	20.33	-9.62e-03	-6.85e-03
18	1	107.50	-79.33	1.14	-0.03	17.98	-0.02	-4.32e-03
18	1	137.50	-69.55	0.88	-0.09	15.30	0.01	-0.02
18	1	167.50	-67.14	0.79	-0.09	14.46	-0.01	-0.02
18	1	197.50	-64.31	0.62	-0.09	14.20	-0.04	-4.91e-03
18	1	227.50	-53.27	0.69	-0.13	13.58	0.01	-0.02
18	1	257.50	-49.10	1.17	-0.14	14.99	-0.03	-0.02
18	1	287.50	-45.93	0.57	-0.15	3.56	-0.07	-5.45e-03
18	1	317.50	-37.90	0.96	-0.22	10.91	0.03	-0.02
18	1	347.50	-35.39	0.86	-0.22	10.18	-0.04	-0.02
18	1	377.50	-32.53	0.87	-0.23	9.92	-0.10	2.98e-03
18	1	405.00	-21.90	0.42	-0.36	9.23	9.06e-03	-0.01
18	1	432.50	-19.08	0.37	-0.36	9.37	-0.09	-4.23e-03
18	1	439.58	-17.29	-1.82	-0.38	13.94	-0.12	0.03
18	1	444.68	-3.78	1.82	-0.04	-0.32	-0.02	2.96e-03
18	1	449.79	-3.56	0.86	-0.02	0.31	-8.76e-03	6.19e-04
18	1	454.89	-1.34	-2.39e-03	9.12e-03	0.07	-7.76e-04	4.71e-04
18	17	0.0	-1.00	0.40	-15.47	0.50	5.56	0.30
18	17	35.83	-1.02	0.40	-15.47	0.48	5.57	-0.98
18	17	71.67	-0.88	0.37	-12.92	0.34	0.64	-1.71
18	17	107.50	-0.82	0.33	-14.37	0.26	-4.10	-0.49
18	17	137.50	-0.65	0.27	-14.57	0.19	4.03	-1.19
18	17	167.50	-0.61	0.27	-13.28	0.16	-0.08	-1.46
18	17	197.50	-0.58	0.27	-14.47	0.15	-4.08	-0.40
18	17	227.50	-0.42	0.22	-14.42	0.10	4.08	-1.20
18	17	257.50	-0.36	0.23	-13.11	0.11	0.02	-1.45
18	17	287.50	-0.25	0.21	-13.39	-0.08	-3.92	-0.34
18	17	317.50	-0.27	0.43	-15.00	-0.22	4.09	-1.23
18	17	347.50	-0.27	0.48	-13.62	-0.26	-0.07	-1.50
18	17	377.50	-0.23	0.48	-14.78	-0.32	-4.20	-0.26
18	17	405.00	0.02	0.31	-15.49	-0.46	2.87	-0.33
18	17	432.50	0.07	0.31	-15.60	-0.55	-1.43	-0.79
18	17	439.58	0.08	0.27	-14.67	-0.54	-4.32	0.35
18	17	444.68	-0.54	-2.54e-03	-3.47	0.21	-1.68	0.24
18	17	449.79	-0.10	0.12	-1.07	-0.04	-0.59	0.12
18	17	454.89	-0.11	0.08	0.82	-4.05e-03	-0.05	0.04
18	19	0.0	-0.28	19.46	-4.67	48.77	1.94	0.11
18	19	35.83	-5.62	19.46	-4.67	50.33	1.94	-0.37
18	19	71.67	-3.74	20.07	-4.79	41.99	0.25	-0.64
18	19	107.50	-3.62	21.57	-4.70	34.42	-1.46	-0.18
18	19	137.50	-5.34	18.03	-4.91	27.75	1.47	-0.46
18	19	167.50	-5.19	18.05	-4.94	23.54	2.06e-03	-0.56
18	19	197.50	-4.40	17.75	-4.91	19.39	-1.48	-0.16
18	19	227.50	-3.70	15.26	-4.95	15.41	1.50	-0.47
18	19	257.50	-2.90	15.41	-4.91	12.24	0.03	-0.56

18	19	287.50	-5.07	13.65	-5.03	5.17	-1.47	-0.13
18	19	317.50	-3.23	11.71	-5.08	5.56	1.51	-0.48
18	19	347.50	-2.60	11.16	-5.12	3.34	-0.02	-0.58
18	19	377.50	0.30	10.39	-5.10	-0.99	-1.56	-0.11
18	19	405.00	0.88	6.75	-5.72	-0.85	1.06	-0.13
18	19	432.50	1.45	6.05	-5.90	-2.39	-0.54	-0.29
18	19	439.58	1.18	5.52	-5.43	-3.10	-1.60	0.13
18	19	444.68	-3.57	0.91	-1.20	2.99	-0.61	0.09
18	19	449.79	1.09	1.98	-0.30	-0.21	-0.20	0.04
18	19	454.89	0.26	0.86	0.38	-3.49e-03	-0.01	9.44e-03
18	20	0.0	-0.23	19.69	4.85	49.20	-2.03	-0.13
18	20	35.83	-5.61	19.69	4.85	50.79	-2.02	0.39
18	20	71.67	-3.71	20.30	5.04	42.35	-0.26	0.67
18	20	107.50	-3.59	21.82	4.89	34.69	1.52	0.19
18	20	137.50	-5.38	18.20	5.11	27.97	-1.53	0.47
18	20	167.50	-5.22	18.21	5.14	23.72	5.55e-04	0.58
18	20	197.50	-4.43	17.89	5.09	19.53	1.54	0.16
18	20	227.50	-3.76	15.36	5.14	15.53	-1.56	0.47
18	20	257.50	-2.97	15.49	5.08	12.34	-0.03	0.57
18	20	287.50	-5.15	13.71	5.20	5.22	1.52	0.13
18	20	317.50	-3.27	11.55	5.30	5.68	-1.58	0.49
18	20	347.50	-1.99	10.96	5.36	4.05	0.02	0.60
18	20	377.50	0.94	10.17	5.32	-0.60	1.63	0.10
18	20	405.00	0.83	6.72	5.97	-0.57	-1.12	0.12
18	20	432.50	1.35	5.86	6.16	-2.05	0.55	0.30
18	20	439.58	1.08	5.34	5.64	-2.74	1.66	-0.13
18	20	444.68	-3.26	0.91	1.28	2.87	0.64	-0.09
18	20	449.79	1.14	1.92	0.34	-0.18	0.21	-0.04
18	20	454.89	0.32	0.81	-0.39	-1.11e-03	0.01	-0.01

M_S	**N memb.**	**V memb.**	**V orto**	**M memb.**	**M orto**	**T**
	-81.94	-1.82	-15.60	-3.10	-4.32	-1.71
	1.45	21.82	6.16	50.79	5.57	0.67

Macro	Tipo	Angolo 1-Z (gradi)
19	**Setto**	**0.0**

M_S	**CDC**	**Z**	**N memb.**	**V memb.**	**V orto**	**M memb.**	**M orto**	**T**
		cm	kN	kN	kN	kN m	kN m	kN m
19	1	0.0	-80.54	5.13	-0.05	31.39	0.04	3.11e-03
19	1	35.83	-83.48	2.84	-0.06	26.23	0.02	-0.01
19	1	71.67	-82.74	2.20	-0.06	21.95	-6.80e-03	-0.01
19	1	107.50	-80.76	2.18	-0.05	19.31	-0.03	-3.71e-03
19	1	137.50	-70.80	1.53	-0.05	16.56	8.59e-03	-0.01
19	1	167.50	-68.31	1.44	-0.05	15.64	-7.19e-03	-0.01
19	1	197.50	-65.49	1.26	-0.05	15.16	-0.02	-3.50e-03
19	1	227.50	-54.98	1.01	-0.07	13.69	6.97e-03	-0.01
19	1	257.50	-52.34	0.93	-0.07	13.12	-0.01	-0.01
19	1	287.50	-49.61	0.67	-0.07	6.61	-0.04	-6.79e-03
19	1	317.50	-39.18	0.36	-0.13	11.84	0.02	-0.01
19	1	347.50	-36.42	0.38	-0.13	11.59	-0.02	-0.01
19	1	377.50	-33.61	0.42	-0.12	11.41	-0.05	-3.28e-05
19	1	405.00	-22.98	-0.26	-0.15	10.75	6.26e-03	-4.68e-03
19	1	432.50	-20.21	-0.31	-0.15	11.01	-0.03	-5.89e-03
19	1	439.58	-18.50	-2.81	-0.15	15.91	-0.05	6.42e-03
19	1	444.68	-3.31	1.62	-0.04	-0.49	-0.02	3.44e-03
19	1	449.79	-3.48	0.67	9.30e-04	0.29	-5.21e-03	1.66e-03
19	1	454.89	-1.33	-0.12	0.02	0.07	1.75e-03	2.99e-04
19	17	0.0	0.13	0.08	-15.51	-0.06	5.58	0.31
19	17	35.83	0.13	0.08	-15.51	-0.06	5.58	-0.98
19	17	71.67	0.10	0.10	-12.96	-0.04	0.64	-1.71
19	17	107.50	0.10	0.11	-14.41	-0.03	-4.11	-0.49
19	17	137.50	0.13	0.13	-14.61	-0.03	4.03	-1.19
19	17	167.50	0.16	0.13	-13.32	-0.03	-0.08	-1.46
19	17	197.50	0.20	0.12	-14.51	-0.04	-4.10	-0.41
19	17	227.50	0.13	0.01	-14.05	-0.03	4.07	-1.20
19	17	257.50	0.15	0.02	-12.73	-2.31e-04	0.14	-1.46
19	17	287.50	0.19	0.03	-14.36	0.06	-3.72	-0.34
19	17	317.50	-0.24	0.14	-13.84	-0.09	4.17	-1.23
19	17	347.50	-0.18	0.12	-13.81	-0.06	-0.05	-1.50
19	17	377.50	-0.13	0.10	-14.94	-0.02	-4.22	-0.26
19	17	405.00	-0.06	0.10	-15.54	3.88e-03	2.88	-0.32
19	17	432.50	-0.06	0.10	-15.65	3.27e-03	-1.43	-0.79
19	17	439.58	-0.03	0.09	-14.74	3.07e-03	-4.33	0.35
19	17	444.68	-9.61e-03	0.07	-3.47	-0.01	-1.68	0.24
19	17	449.79	-0.02	0.05	-1.08	6.42e-05	-0.59	0.12

19	17	454.89	-9.43e-03	0.03	0.82	4.01e-04	-0.05	0.04
19	19	0.0	-0.40	19.88	-4.69	49.37	1.96	0.12
19	19	35.83	-5.81	19.88	-4.69	50.95	1.96	-0.37
19	19	71.67	-3.91	20.46	-4.88	42.45	0.25	-0.64
19	19	107.50	-3.78	21.94	-4.73	34.71	-1.46	-0.18
19	19	137.50	-5.64	18.26	-4.94	27.92	1.48	-0.46
19	19	167.50	-5.55	18.28	-4.97	23.60	-1.73e-03	-0.56
19	19	197.50	-4.85	17.97	-4.94	19.28	-1.49	-0.16
19	19	227.50	-4.54	15.24	-4.79	14.89	1.50	-0.46
19	19	257.50	-5.33	14.82	-4.80	10.44	0.07	-0.56
19	19	287.50	-4.05	14.22	-4.80	9.29	-1.37	-0.13
19	19	317.50	-2.16	11.78	-5.18	6.96	1.55	-0.47
19	19	347.50	-1.75	11.32	-5.23	4.85	-8.26e-03	-0.58
19	19	377.50	1.68	10.53	-5.19	0.28	-1.58	-0.10
19	19	405.00	0.67	7.10	-5.78	-0.36	1.08	-0.12
19	19	432.50	1.17	6.17	-5.96	-1.93	-0.54	-0.29
19	19	439.58	0.88	5.70	-5.47	-2.64	-1.62	0.13
19	19	444.68	-3.40	1.13	-1.24	2.96	-0.62	0.09
19	19	449.79	1.17	2.11	-0.33	-0.18	-0.21	0.04
19	19	454.89	0.33	0.88	0.37	-4.67e-03	-0.01	0.01
19	20	0.0	-0.45	19.82	4.85	49.38	-2.02	-0.12
19	20	35.83	-5.86	19.82	4.85	50.96	-2.02	0.39
19	20	71.67	-3.97	20.40	5.04	42.47	-0.26	0.66
19	20	107.50	-3.86	21.90	4.89	34.74	1.51	0.19
19	20	137.50	-5.73	18.18	5.11	27.94	-1.53	0.47
19	20	167.50	-5.66	18.19	5.14	23.63	2.04e-03	0.58
19	20	197.50	-4.98	17.89	5.10	19.30	1.54	0.16
19	20	227.50	-4.64	15.22	4.94	14.91	-1.55	0.48
19	20	257.50	-5.41	14.80	4.95	10.46	-0.07	0.58
19	20	287.50	-4.11	14.20	4.95	9.27	1.42	0.14
19	20	317.50	-2.03	11.69	5.32	7.01	-1.59	0.49
19	20	347.50	-1.65	11.25	5.38	4.88	8.00e-03	0.60
19	20	377.50	1.75	10.46	5.33	0.30	1.62	0.10
19	20	405.00	0.70	7.03	5.94	-0.36	-1.11	0.12
19	20	432.50	1.19	6.12	6.13	-1.92	0.55	0.30
19	20	439.58	0.89	5.64	5.61	-2.64	1.66	-0.13
19	20	444.68	-3.39	1.09	1.25	2.96	0.63	-0.09
19	20	449.79	1.18	2.07	0.32	-0.18	0.21	-0.04
19	20	454.89	0.34	0.87	-0.40	-5.07e-03	0.01	-0.01

M_S	**N memb.**	**V memb.**	**V orto**	**M memb.**	**M orto**	**T**
	-83.48	-2.81	-15.65	-2.64	-4.33	-1.71
	1.75	21.94	6.13	50.96	5.58	0.66

Macro	Tipo	Angolo 1-Z (gradi)
20	**Setto**	**0.0**

M_S	**CDC**	**Z**	**N memb.**	**V memb.**	**V orto**	**M memb.**	**M orto**	**T**
		cm	kN	kN	kN	kN m	kN m	kN m
20	1	0.0	-78.77	4.39	-0.08	28.96	0.07	0.03
20	1	35.83	-81.68	2.12	-0.11	24.10	0.03	-4.33e-03
20	1	71.67	-80.93	1.48	-0.10	20.10	-4.75e-03	-0.02
20	1	107.50	-78.96	1.46	-0.09	17.70	-0.04	-3.09e-03
20	1	137.50	-69.13	1.17	-0.03	14.97	7.22e-03	-2.58e-03
20	1	167.50	-66.78	1.09	-0.03	13.97	-1.41e-03	-5.25e-03
20	1	197.50	-64.15	0.91	-0.02	13.36	-8.91e-03	-3.44e-03
20	1	227.50	-53.98	0.83	-0.02	11.61	6.89e-04	-4.91e-03
20	1	257.50	-51.32	0.73	-6.47e-03	11.12	-2.85e-03	-2.89e-03
20	1	287.50	-48.68	0.58	0.01	11.00	-2.47e-03	-7.23e-03
20	1	317.50	-38.26	0.58	-6.78e-03	9.98	6.30e-03	-2.66e-03
20	1	347.50	-35.33	0.56	-9.98e-03	9.88	3.40e-03	-5.39e-03
20	1	377.50	-32.36	0.57	9.48e-03	9.85	2.50e-03	-2.76e-03
20	1	405.00	-21.76	0.12	0.08	9.23	3.37e-03	2.07e-03
20	1	432.50	-18.98	0.06	0.09	9.39	0.03	-7.34e-03
20	1	439.58	-17.17	-2.14	0.11	13.92	0.04	-0.02
20	1	444.68	-3.64	1.28	-0.03	-0.38	-0.02	2.76e-03
20	1	449.79	-3.51	0.43	0.02	0.29	5.29e-05	1.87e-03
20	1	454.89	-1.33	-0.16	0.02	0.07	3.43e-03	-1.12e-04
20	17	0.0	1.16	-0.42	-15.49	-0.53	5.57	0.30
20	17	35.83	1.18	-0.42	-15.49	-0.51	5.57	-0.98
20	17	71.67	1.04	-0.41	-12.94	-0.37	0.64	-1.71
20	17	107.50	1.00	-0.36	-14.39	-0.31	-4.11	-0.49
20	17	137.50	0.88	-0.28	-14.62	-0.27	4.03	-1.18
20	17	167.50	0.87	-0.26	-13.33	-0.28	-0.08	-1.45
20	17	197.50	0.86	-0.25	-14.52	-0.29	-4.10	-0.41
20	17	227.50	0.63	-0.18	-13.51	-0.20	4.05	-1.20

20	17	257.50	0.61	-0.18	-12.28	-0.20	0.29	-1.46
20	17	287.50	0.57	-0.19	-13.42	-0.22	-3.43	-0.36
20	17	317.50	-0.06	-0.23	-13.87	0.40	4.20	-1.24
20	17	347.50	-0.05	-0.27	-13.90	0.40	-0.04	-1.50
20	17	377.50	-0.07	-0.27	-15.06	0.44	-4.23	-0.26
20	17	405.00	-0.13	-0.15	-15.51	0.49	2.87	-0.32
20	17	432.50	-0.17	-0.15	-15.62	0.57	-1.43	-0.79
20	17	439.58	-0.16	-0.10	-14.70	0.57	-4.33	0.35
20	17	444.68	0.50	0.15	-3.47	-0.20	-1.68	0.24
20	17	449.79	0.08	-0.03	-1.08	0.04	-0.59	0.12
20	17	454.89	0.10	-0.04	0.82	4.93e-03	-0.05	0.04
20	19	0.0	-0.21	19.79	-4.70	49.08	1.96	0.12
20	19	35.83	-5.59	19.79	-4.70	50.67	1.96	-0.37
20	19	71.67	-3.71	20.37	-4.88	42.19	0.26	-0.64
20	19	107.50	-3.62	21.93	-4.73	34.45	-1.47	-0.18
20	19	137.50	-5.52	18.23	-4.96	27.63	1.48	-0.46
20	19	167.50	-5.45	18.23	-4.99	23.26	-5.38e-03	-0.56
20	19	197.50	-4.78	17.93	-4.95	18.92	-1.50	-0.16
20	19	227.50	-5.31	15.10	-4.59	14.54	1.50	-0.46
20	19	257.50	-3.07	14.94	-4.63	11.62	0.12	-0.56
20	19	287.50	-2.23	14.25	-4.60	9.92	-1.27	-0.14
20	19	317.50	-1.56	11.52	-5.24	7.06	1.58	-0.48
20	19	347.50	0.51	11.11	-5.31	3.42	3.13e-03	-0.58
20	19	377.50	1.94	10.35	-5.29	0.44	-1.60	-0.10
20	19	405.00	1.03	6.93	-5.81	-0.17	1.08	-0.12
20	19	432.50	1.43	5.95	-5.99	-1.79	-0.53	-0.29
20	19	439.58	1.11	5.53	-5.49	-2.62	-1.62	0.13
20	19	444.68	-3.15	0.93	-1.26	2.89	-0.62	0.09
20	19	449.79	1.24	1.85	-0.34	-0.19	-0.21	0.04
20	19	454.89	0.37	0.72	0.37	-3.90e-03	-0.01	0.01

M_S	**N memb.**	**V memb.**	**V orto**	**M memb.**	**M orto**	**T**
	-81.68	-2.14	-15.62	-2.62	-4.33	-1.71
	1.94	21.93	0.82	50.67	5.57	0.35

Macro	Tipo	Angolo 1-Z (gradi)
21	**Setto**	**0.0**

M_S	**CDC**	**Z**	**N memb.**	**V memb.**	**V orto**	**M memb.**	**M orto**	**T**
		cm	kN	kN	kN	kN m	kN m	kN m
21	1	0.0	-74.84	2.27	-0.03	23.39	0.05	0.04
21	1	35.83	-77.77	-4.30e-03	-0.09	19.27	0.03	1.91e-03
21	1	71.67	-77.04	-0.63	-0.09	15.99	-4.71e-03	-0.01
21	1	107.50	-75.16	-0.64	-0.07	14.25	-0.03	1.84e-03
21	1	137.50	-65.35	0.22	-0.06	11.59	7.75e-03	8.66e-04
21	1	167.50	-63.14	0.14	-0.06	10.69	-0.01	1.57e-04
21	1	197.50	-60.64	0.01	-0.04	10.19	-0.03	5.55e-03
21	1	227.50	-50.21	0.61	-0.02	8.21	0.01	2.67e-03
21	1	257.50	-47.58	0.53	-0.01	7.74	5.67e-03	1.72e-03
21	1	287.50	-45.03	0.43	6.77e-03	13.44	3.75e-03	1.15e-04
21	1	317.50	-34.47	1.09	-5.01e-03	6.51	-4.94e-03	-2.35e-03
21	1	347.50	-31.55	1.07	-3.86e-04	6.26	-5.99e-03	9.34e-04
21	1	377.50	-28.55	1.06	0.03	6.11	-3.18e-03	0.02
21	1	405.00	-17.44	1.97	0.27	4.66	0.03	0.02
21	1	432.50	-14.64	1.91	0.27	4.33	0.10	-0.01
21	1	439.58	-12.62	0.57	0.32	7.60	0.13	-0.06
21	1	444.68	-4.80	1.49	-0.03	0.04	-0.01	-2.22e-03
21	1	449.79	-3.72	0.49	0.02	0.35	1.59e-03	1.72e-03
21	1	454.89	-1.34	-0.11	0.02	0.07	3.51e-03	5.91e-05
21	17	0.0	2.31	-0.84	-15.40	-0.96	5.54	0.30
21	17	35.83	2.32	-0.84	-15.40	-0.92	5.54	-0.98
21	17	71.67	1.91	-0.80	-12.87	-0.51	0.64	-1.70
21	17	107.50	1.77	-0.72	-14.31	-0.34	-4.08	-0.49
21	17	137.50	1.14	-0.53	-14.57	-0.22	4.01	-1.19
21	17	167.50	1.11	-0.50	-13.29	-0.20	-0.09	-1.45
21	17	197.50	1.09	-0.46	-14.46	-0.20	-4.10	-0.39
21	17	227.50	0.37	-0.40	-13.05	0.09	4.01	-1.21
21	17	257.50	0.38	-0.39	-11.73	0.10	0.43	-1.44
21	17	287.50	-0.13	-0.40	-12.84	0.46	-3.14	-0.36
21	17	317.50	-0.10	-0.98	-14.14	0.62	4.30	-1.23
21	17	347.50	-0.17	-1.02	-14.12	0.84	-0.02	-1.51
21	17	377.50	-0.13	-1.05	-15.27	1.08	-4.27	-0.24
21	17	405.00	-0.31	-0.80	-15.48	0.79	2.86	-0.31
21	17	432.50	-0.40	-0.79	-15.58	1.08	-1.43	-0.78
21	17	439.58	-0.41	-0.84	-14.69	1.22	-4.32	0.35
21	17	444.68	0.93	-0.11	-3.44	-0.30	-1.67	0.24

21	17	449.79	0.24	-0.19	-1.07	0.06	-0.59	0.12
21	17	454.89	0.22	-0.12	0.82	7.85e-03	-0.05	0.04
21	18	0.0	2.34	-0.87	-14.94	-1.04	5.36	0.29
21	18	35.83	2.34	-0.87	-14.94	-0.99	5.37	-0.95
21	18	71.67	1.91	-0.82	-12.42	-0.56	0.62	-1.64
21	18	107.50	1.77	-0.73	-13.86	-0.38	-3.94	-0.47
21	18	137.50	1.16	-0.54	-14.10	-0.26	3.87	-1.15
21	18	167.50	1.12	-0.51	-12.84	-0.23	-0.08	-1.40
21	18	197.50	1.09	-0.47	-14.00	-0.22	-3.96	-0.38
21	18	227.50	0.37	-0.41	-12.61	0.09	3.88	-1.16
21	18	257.50	0.39	-0.40	-11.34	0.09	0.42	-1.39
21	18	287.50	-0.14	-0.41	-12.43	0.46	-3.04	-0.35
21	18	317.50	-0.10	-0.96	-13.65	0.60	4.16	-1.19
21	18	347.50	-0.17	-0.99	-13.65	0.82	-3.01e-03	-1.46
21	18	377.50	-0.12	-1.02	-14.78	1.05	-4.13	-0.24
21	18	405.00	-0.30	-0.78	-14.96	0.77	2.77	-0.30
21	18	432.50	-0.38	-0.78	-15.09	1.05	-1.39	-0.74
21	18	439.58	-0.40	-0.82	-14.25	1.18	-4.18	0.34
21	18	444.68	0.90	-0.11	-3.32	-0.29	-1.62	0.23
21	18	449.79	0.24	-0.19	-1.02	0.06	-0.57	0.12
21	18	454.89	0.21	-0.12	0.80	7.71e-03	-0.05	0.04
21	19	0.0	0.43	19.50	-4.61	48.22	1.93	0.12
21	19	35.83	-4.88	19.50	-4.61	49.82	1.93	-0.37
21	19	71.67	-2.98	20.14	-4.80	41.45	0.26	-0.64
21	19	107.50	-2.86	21.72	-4.64	33.84	-1.43	-0.19
21	19	137.50	-5.07	18.39	-4.82	27.31	1.44	-0.46
21	19	167.50	-4.94	18.39	-4.85	22.94	-8.09e-03	-0.56
21	19	197.50	-4.22	18.07	-4.78	18.65	-1.46	-0.16
21	19	227.50	-4.11	15.20	-4.25	14.93	1.44	-0.46
21	19	257.50	-3.03	15.04	-4.26	11.77	0.17	-0.55
21	19	287.50	-2.11	14.45	-4.18	9.91	-1.11	-0.15
21	19	317.50	-1.86	11.11	-5.07	6.89	1.54	-0.47
21	19	347.50	-1.95	10.62	-5.12	4.99	0.02	-0.58
21	19	377.50	-0.30	9.83	-5.09	2.08	-1.52	-0.12
21	19	405.00	-0.42	5.14	-5.73	1.11	1.02	-0.13
21	19	432.50	-0.25	3.88	-5.92	0.30	-0.57	-0.30
21	19	439.58	-0.51	3.80	-5.44	-0.01	-1.64	0.18
21	19	444.68	-1.49	0.60	-1.08	2.01	-0.57	0.08
21	19	449.79	1.43	1.61	-0.30	-0.26	-0.19	0.03
21	19	454.89	0.35	0.57	0.37	-1.52e-03	-9.69e-03	8.44e-03
M_S			**N memb.**	**V memb.**	**V orto**	**M memb.**	**M orto**	**T**
			-77.77	-1.05	-15.58	-1.04	-4.32	-1.70
			2.34	21.72	0.82	49.82	5.54	0.35

Macro	Tipo	Angolo 1-Z (gradi)
22	**Setto**	**0.0**

M_S	**CDC**	**Z**	**N memb.**	**V memb.**	**V orto**	**M memb.**	**M orto**	**T**
		cm	kN	kN	kN	kN m	kN m	kN m
22	1	0.0	-75.07	1.65	0.54	23.63	-0.27	-0.05
22	1	35.83	-78.02	-0.64	0.41	19.71	-0.10	0.02
22	1	71.67	-77.32	-1.27	0.40	16.62	0.04	0.05
22	1	107.50	-75.44	-1.27	0.46	15.10	0.20	3.28e-03
22	1	137.50	-65.65	-0.46	0.36	12.77	-0.05	0.02
22	1	167.50	-63.36	-0.53	0.36	12.18	0.06	0.02
22	1	197.50	-60.74	-0.64	0.42	12.03	0.17	-4.37e-03
22	1	227.50	-50.06	0.38	0.36	10.62	-0.05	0.02
22	1	257.50	-47.25	0.37	0.37	10.43	0.06	0.02
22	1	287.50	-44.42	0.28	0.45	10.29	0.18	-1.56e-03
22	1	317.50	-33.62	1.51	0.33	4.40	-0.04	0.02
22	1	347.50	-30.84	1.44	0.34	8.36	0.06	0.02
22	1	377.50	-27.55	1.52	0.41	8.46	0.17	-0.02
22	1	405.00	-16.16	2.65	0.11	2.83	-0.04	-0.01
22	1	432.50	-14.42	2.73	0.13	5.15	-0.01	0.02
22	1	439.58	-12.46	1.34	0.10	8.24	-8.89e-03	0.04
22	1	444.68	-4.48	2.08	0.23	0.29	0.08	-8.36e-03
22	1	449.79	-3.42	0.69	0.10	0.45	0.04	-8.65e-03
22	1	454.89	-1.09	-0.26	0.06	0.08	0.01	-3.94e-03
22	17	0.0	5.95	-1.37	-15.20	-2.74	5.47	0.29
22	17	35.83	5.84	-1.37	-15.20	-2.63	5.47	-0.97
22	17	71.67	4.16	-2.28	-12.72	-1.07	0.63	-1.68
22	17	107.50	3.44	-2.11	-14.13	-0.47	-4.03	-0.48
22	17	137.50	3.04	-1.48	-14.28	-0.30	3.95	-1.17
22	17	167.50	2.93	-1.31	-13.02	-0.36	-0.08	-1.44
22	17	197.50	2.91	-1.06	-14.17	-0.48	-3.99	-0.40

22	17	227.50	2.83	-0.73	-14.54	-0.59	4.00	-1.17
22	17	257.50	2.87	-0.46	-13.29	-0.73	-0.08	-1.46
22	17	287.50	2.91	-0.11	-14.59	-0.86	-4.07	-0.38
22	17	317.50	2.68	0.15	-13.00	-0.78	3.69	-0.97
22	17	347.50	2.70	0.28	-12.88	-1.23	-0.24	-1.47
22	17	377.50	2.66	0.37	-14.13	-1.36	-4.17	-0.23
22	17	405.00	1.94	-0.55	-15.71	-0.59	2.85	-0.13
22	17	432.50	1.86	-0.71	-15.53	-0.92	-1.44	-0.78
22	17	439.58	1.72	-0.68	-14.56	-1.11	-4.28	0.34
22	17	444.68	-0.13	-1.01	-3.37	0.69	-1.66	0.23
22	17	449.79	0.63	-0.56	-1.00	0.04	-0.58	0.12
22	17	454.89	0.39	-0.30	0.80	0.01	-0.05	0.04
22	19	0.0	0.20	20.78	-4.65	49.45	1.92	0.10
22	19	35.83	-5.22	20.78	-4.65	51.08	1.92	-0.37
22	19	71.67	-3.22	21.61	-4.75	42.47	0.24	-0.62
22	19	107.50	-3.04	22.32	-4.67	34.68	-1.45	-0.17
22	19	137.50	-5.10	19.09	-4.94	28.05	1.48	-0.45
22	19	167.50	-4.81	19.10	-4.96	23.58	-1.65e-04	-0.55
22	19	197.50	-3.97	18.76	-4.93	19.19	-1.49	-0.15
22	19	227.50	-3.61	16.21	-5.06	15.16	1.51	-0.45
22	19	257.50	-2.81	16.07	-5.10	11.83	-4.22e-03	-0.56
22	19	287.50	-2.03	15.46	-5.09	8.58	-1.54	-0.15
22	19	317.50	-1.41	11.31	-5.06	6.55	1.42	-0.38
22	19	347.50	-0.88	10.95	-5.08	4.75	-0.09	-0.57
22	19	377.50	1.86	10.34	-5.09	0.83	-1.63	-0.07
22	19	405.00	-0.25	4.58	-5.86	-0.52	1.11	-0.02
22	19	432.50	-0.12	4.19	-5.85	-0.80	-0.50	-0.27
22	19	439.58	-0.09	3.59	-5.42	-0.94	-1.57	0.06
22	19	444.68	-2.15	0.21	-1.34	2.35	-0.65	0.10
22	19	449.79	1.39	1.46	-0.34	-0.26	-0.22	0.05
22	19	454.89	0.34	0.70	0.35	0.01	-0.01	0.01
M_S			**N memb.**	**V memb.**	**V orto**	**M memb.**	**M orto**	**T**
			-78.02	-2.28	-15.71	-2.74	-4.28	-1.68
			5.95	22.32	0.80	51.08	5.47	0.34

Macro	Tipo	Angolo 1-Z (gradi)
23	**Setto**	**0.0**

M_S	**CDC**	**Z**	**N memb.**	**V memb.**	**V orto**	**M memb.**	**M orto**	**T**
		cm	kN	kN	kN	kN m	kN m	kN m
23	1	0.0	-78.57	4.01	0.60	28.83	-0.30	-0.04
23	1	35.83	-81.52	1.72	0.45	24.05	-0.11	0.03
23	1	71.67	-80.82	1.08	0.44	20.12	0.05	0.05
23	1	107.50	-78.92	1.07	0.50	17.79	0.21	6.17e-03
23	1	137.50	-69.14	0.88	0.37	15.08	-0.05	0.02
23	1	167.50	-66.78	0.80	0.37	14.18	0.06	0.03
23	1	197.50	-64.09	0.65	0.43	13.73	0.17	1.34e-03
23	1	227.50	-53.60	0.69	0.34	12.39	-0.05	0.02
23	1	257.50	-50.73	0.66	0.34	12.19	0.05	0.03
23	1	287.50	-47.84	0.53	0.41	12.03	0.16	4.44e-03
23	1	317.50	-37.48	0.62	0.26	6.06	-0.03	0.02
23	1	347.50	-34.68	0.53	0.27	10.82	0.04	0.03
23	1	377.50	-31.32	0.58	0.35	11.28	0.14	6.66e-03
23	1	405.00	-20.45	0.15	0.22	5.82	-0.01	8.49e-04
23	1	432.50	-18.70	0.27	0.24	9.93	0.05	0.02
23	1	439.58	-16.98	-1.99	0.24	14.34	0.06	0.01
23	1	444.68	-3.44	1.65	0.22	-0.17	0.08	-0.01
23	1	449.79	-3.33	0.66	0.11	0.40	0.04	-7.71e-03
23	1	454.89	-1.13	-0.25	0.06	0.07	0.01	-3.78e-03
23	17	0.0	7.27	-2.82	-15.09	-3.26	5.43	0.30
23	17	35.83	7.14	-2.82	-15.09	-3.12	5.44	-0.97
23	17	71.67	5.24	-2.76	-12.65	-1.33	0.62	-1.67
23	17	107.50	4.45	-2.54	-14.04	-0.65	-4.01	-0.48
23	17	137.50	3.63	-2.06	-14.21	-0.44	3.92	-1.16
23	17	167.50	3.53	-1.99	-12.96	-0.50	-0.08	-1.42
23	17	197.50	3.52	-1.87	-14.10	-0.62	-3.97	-0.40
23	17	227.50	2.97	-1.45	-13.18	-0.67	3.97	-1.16
23	17	257.50	2.98	-1.37	-13.17	-0.78	-0.07	-1.44
23	17	287.50	3.01	-1.09	-13.00	-0.88	-4.03	-0.37
23	17	317.50	2.48	-0.60	-12.83	-0.50	3.66	-0.95
23	17	347.50	2.46	-0.55	-12.73	-0.80	-0.22	-1.45
23	17	377.50	2.39	-0.16	-13.98	-0.77	-4.10	-0.26
23	17	405.00	1.82	-0.92	-15.63	-0.50	2.83	-0.15
23	17	432.50	1.79	-1.13	-15.46	-0.60	-1.44	-0.78
23	17	439.58	1.57	-1.05	-14.49	-0.71	-4.28	0.33

23	17	444.68	0.13	-1.19	-3.40	0.66	-1.66	0.23
23	17	449.79	0.77	-0.63	-1.02	0.06	-0.58	0.11
23	17	454.89	0.49	-0.34	0.78	0.02	-0.05	0.04
23	18	0.0	7.28	-2.85	-14.63	-3.40	5.26	0.29
23	18	35.83	7.15	-2.85	-14.63	-3.27	5.26	-0.93
23	18	71.67	5.26	-2.77	-12.22	-1.47	0.60	-1.62
23	18	107.50	4.49	-2.55	-13.60	-0.79	-3.87	-0.47
23	18	137.50	3.65	-2.05	-13.74	-0.54	3.79	-1.12
23	18	167.50	3.54	-1.98	-12.53	-0.58	-0.07	-1.38
23	18	197.50	3.51	-1.86	-13.65	-0.67	-3.84	-0.38
23	18	227.50	2.95	-1.45	-13.92	-0.70	3.83	-1.12
23	18	257.50	2.96	-1.37	-12.73	-0.80	-0.05	-1.40
23	18	287.50	2.98	-1.09	-14.00	-0.88	-3.90	-0.35
23	18	317.50	2.45	-0.63	-12.38	-0.51	3.54	-0.92
23	18	347.50	2.43	-0.58	-12.30	-0.79	-0.21	-1.41
23	18	377.50	2.36	-0.24	-13.54	-0.76	-3.97	-0.25
23	18	405.00	1.80	-0.98	-15.12	-0.49	2.74	-0.15
23	18	432.50	1.76	-1.10	-14.98	-0.59	-1.40	-0.73
23	18	439.58	1.54	-1.04	-14.06	-0.69	-4.14	0.32
23	18	444.68	0.13	-1.17	-3.28	0.65	-1.61	0.22
23	18	449.79	0.75	-0.62	-0.98	0.06	-0.56	0.11
23	18	454.89	0.48	-0.34	0.76	0.02	-0.05	0.04
23	19	0.0	-0.44	21.75	-4.56	51.00	1.90	0.10
23	19	35.83	-6.00	21.75	-4.56	52.66	1.89	-0.36
23	19	71.67	-3.96	22.33	-4.73	43.75	0.25	-0.62
23	19	107.50	-3.77	23.03	-4.58	35.68	-1.42	-0.18
23	19	137.50	-5.60	19.40	-4.79	28.63	1.43	-0.44
23	19	167.50	-5.39	19.39	-4.81	24.11	8.75e-04	-0.54
23	19	197.50	-4.57	19.03	-4.78	19.65	-1.44	-0.15
23	19	227.50	-3.97	16.22	-4.87	15.39	1.46	-0.44
23	19	257.50	-3.19	16.07	-4.92	12.08	-1.90e-03	-0.55
23	19	287.50	-3.19	15.48	-4.87	8.14	-1.48	-0.15
23	19	317.50	-1.36	11.81	-4.78	6.66	1.36	-0.36
23	19	347.50	0.75	11.46	-4.80	3.01	-0.07	-0.56
23	19	377.50	2.25	10.85	-4.80	0.56	-1.52	-0.10
23	19	405.00	0.88	6.14	-5.84	-1.17	1.06	-0.06
23	19	432.50	1.65	6.00	-5.82	-2.55	-0.55	-0.29
23	19	439.58	1.40	5.03	-5.44	-3.24	-1.61	0.13
23	19	444.68	-3.57	0.40	-1.22	3.14	-0.61	0.08
23	19	449.79	1.28	1.61	-0.33	-0.20	-0.21	0.04
23	19	454.89	0.39	0.84	0.34	9.08e-03	-0.01	9.50e-03

M_S	**N memb.**	**V memb.**	**V orto**	**M memb.**	**M orto**	**T**
	-81.52	-2.85	-15.63	-3.40	-4.28	-1.67
	7.28	23.03	0.78	52.66	5.44	0.33

Macro	Tipo	Angolo 1-Z (gradi)
24	**Setto**	**0.0**

M_S	**CDC**	**Z**	**N memb.**	**V memb.**	**V orto**	**M memb.**	**M orto**	**T**
		cm	kN	kN	kN	kN m	kN m	kN m
24	1	0.0	-80.26	4.99	0.57	31.16	-0.27	-0.02
24	1	35.83	-83.23	2.70	0.40	26.02	-0.09	0.03
24	1	71.67	-82.55	2.06	0.40	21.71	0.05	0.05
24	1	107.50	-80.65	2.04	0.47	19.02	0.20	7.08e-03
24	1	137.50	-70.82	1.44	0.40	16.14	-0.06	0.03
24	1	167.50	-68.44	1.35	0.40	15.09	0.06	0.03
24	1	197.50	-65.72	1.18	0.47	14.52	0.19	3.63e-03
24	1	227.50	-55.18	0.77	0.40	13.15	-0.06	0.03
24	1	257.50	-52.28	0.73	0.41	12.96	0.06	0.03
24	1	287.50	-49.37	0.59	0.49	12.81	0.20	4.39e-03
24	1	317.50	-38.95	0.22	0.36	6.78	-0.04	0.03
24	1	347.50	-36.14	0.12	0.37	11.85	0.06	0.04
24	1	377.50	-32.75	0.16	0.46	12.48	0.19	1.89e-03
24	1	405.00	-21.76	-0.61	0.44	6.87	-0.02	5.90e-03
24	1	432.50	-20.00	-0.47	0.45	11.53	0.10	0.02
24	1	439.58	-18.36	-3.05	0.47	16.35	0.14	-0.02
24	1	444.68	-3.06	1.59	0.21	-0.37	0.07	-0.01
24	1	449.79	-3.34	0.68	0.11	0.38	0.04	-6.45e-03
24	1	454.89	-1.16	-0.23	0.06	0.07	0.01	-3.45e-03
24	17	0.0	8.09	-3.08	-14.94	-3.50	5.38	0.29
24	17	35.83	7.99	-3.08	-14.94	-3.36	5.39	-0.96
24	17	71.67	6.07	-2.99	-12.55	-1.54	0.62	-1.66
24	17	107.50	5.30	-2.73	-13.91	-0.87	-3.97	-0.48
24	17	137.50	4.37	-2.14	-14.06	-0.64	3.88	-1.15
24	17	167.50	4.27	-2.04	-12.83	-0.70	-0.08	-1.41

24	17	197.50	4.23	-1.90	-13.95	-0.81	-3.93	-0.39
24	17	227.50	3.53	-1.37	-13.01	-0.81	3.92	-1.14
24	17	257.50	3.51	-1.27	-13.01	-0.88	-0.07	-1.43
24	17	287.50	3.50	-1.13	-12.83	-0.93	-3.98	-0.36
24	17	317.50	2.79	-0.67	-12.73	-0.48	3.63	-0.94
24	17	347.50	2.71	-0.65	-12.62	-0.74	-0.22	-1.44
24	17	377.50	2.60	-0.69	-12.56	-0.62	-4.06	-0.25
24	17	405.00	1.69	-1.20	-15.62	-0.26	2.83	-0.15
24	17	432.50	2.24	-1.69	-15.45	-0.33	-1.44	-0.78
24	17	439.58	2.36	-1.69	-14.53	-0.57	-4.27	0.33
24	17	444.68	1.44	-1.20	-3.40	-0.04	-1.66	0.23
24	17	449.79	0.84	-0.72	-1.05	0.08	-0.58	0.11
24	17	454.89	0.55	-0.39	0.75	0.02	-0.05	0.04
24	18	0.0	8.14	-3.14	-14.48	-3.71	5.21	0.28
24	18	35.83	8.04	-3.14	-14.48	-3.56	5.21	-0.92
24	18	71.67	6.11	-3.03	-12.12	-1.72	0.60	-1.60
24	18	107.50	5.34	-2.75	-13.47	-1.02	-3.84	-0.46
24	18	137.50	4.39	-2.15	-13.59	-0.76	3.75	-1.11
24	18	167.50	4.27	-2.05	-12.40	-0.79	-0.07	-1.36
24	18	197.50	4.22	-1.91	-13.50	-0.87	-3.80	-0.38
24	18	227.50	3.51	-1.39	-12.55	-0.85	3.78	-1.11
24	18	257.50	3.48	-1.29	-12.57	-0.90	-0.05	-1.38
24	18	287.50	3.47	-1.16	-12.41	-0.94	-3.85	-0.35
24	18	317.50	2.76	-0.71	-12.28	-0.49	3.51	-0.91
24	18	347.50	2.68	-0.69	-12.20	-0.74	-0.21	-1.39
24	18	377.50	2.57	-0.71	-13.41	-0.62	-3.93	-0.24
24	18	405.00	1.68	-1.19	-15.11	-0.26	2.74	-0.15
24	18	432.50	2.49	-1.68	-14.98	-0.63	-1.39	-0.74
24	18	439.58	3.41	-1.66	-14.11	-1.38	-4.14	0.32
24	18	444.68	1.17	-1.18	-3.28	0.06	-1.60	0.22
24	18	449.79	0.82	-0.71	-1.00	0.08	-0.56	0.11
24	18	454.89	0.54	-0.39	0.73	0.02	-0.05	0.04
24	19	0.0	-0.61	22.76	-4.53	51.68	1.89	0.11
24	19	35.83	-6.23	22.76	-4.53	53.35	1.88	-0.36
24	19	71.67	-4.18	22.70	-4.70	44.30	0.24	-0.62
24	19	107.50	-3.97	23.39	-4.55	36.09	-1.41	-0.18
24	19	137.50	-5.82	19.64	-4.76	28.96	1.42	-0.44
24	19	167.50	-5.65	19.62	-4.78	24.39	2.35e-04	-0.54
24	19	197.50	-4.81	19.25	-4.74	19.89	-1.43	-0.15
24	19	227.50	-4.25	16.32	-4.83	15.62	1.45	-0.44
24	19	257.50	-3.46	16.15	-4.87	12.30	-2.12e-03	-0.55
24	19	287.50	-3.45	15.56	-4.82	8.36	-1.46	-0.15
24	19	317.50	-1.68	11.91	-4.76	6.86	1.35	-0.36
24	19	347.50	-1.22	11.55	-4.77	5.11	-0.07	-0.55
24	19	377.50	2.29	10.94	-4.77	0.53	-1.51	-0.10
24	19	405.00	0.53	6.19	-5.86	-0.97	1.07	-0.06
24	19	432.50	1.26	6.06	-5.85	-2.20	-0.54	-0.29
24	19	439.58	1.03	5.09	-5.45	-2.84	-1.61	0.12
24	19	444.68	-3.44	0.52	-1.25	3.07	-0.62	0.08
24	19	449.79	1.28	1.67	-0.35	-0.18	-0.21	0.04
24	19	454.89	0.42	0.89	0.32	8.41e-03	-0.02	0.01

M_S	**N memb.**	**V memb.**	**V orto**	**M memb.**	**M orto**	**T**
	-83.23	-3.14	-15.62	-3.71	-4.27	-1.66
	8.14	23.39	0.75	53.35	5.39	0.33

Macro	Tipo	Angolo 1-Z (gradi)
25	**Setto**	**0.0**

M_S	**CDC**	**Z**	**N memb.**	**V memb.**	**V orto**	**M memb.**	**M orto**	**T**
		cm	kN	kN	kN	kN m	kN m	kN m
25	1	0.0	-78.67	4.07	0.54	29.01	-0.24	0.01
25	1	35.83	-81.63	1.78	0.36	24.21	-0.07	0.04
25	1	71.67	-80.94	1.15	0.35	20.23	0.05	0.04
25	1	107.50	-79.05	1.13	0.43	17.87	0.18	7.74e-03
25	1	137.50	-69.27	0.91	0.42	15.13	-0.06	0.04
25	1	167.50	-66.93	0.83	0.43	14.21	0.07	0.04
25	1	197.50	-64.24	0.67	0.52	13.75	0.21	5.98e-03
25	1	227.50	-53.76	0.65	0.47	12.40	-0.06	0.04
25	1	257.50	-50.90	0.62	0.48	12.20	0.08	0.04
25	1	287.50	-48.02	0.49	0.57	12.05	0.23	4.26e-03
25	1	317.50	-37.67	0.53	0.47	6.07	-0.06	0.03
25	1	347.50	-34.88	0.43	0.48	10.88	0.09	0.05
25	1	377.50	-31.51	0.47	0.58	11.38	0.24	-2.93e-03
25	1	405.00	-20.63	0.03	0.65	5.92	-0.02	0.01
25	1	432.50	-18.89	0.13	0.66	10.10	0.16	0.02

25	1	439.58	-17.18	-2.16	0.70	14.57	0.22	-0.05
25	1	444.68	-3.42	1.61	0.19	-0.20	0.07	-9.92e-03
25	1	449.79	-3.35	0.65	0.10	0.39	0.04	-5.02e-03
25	1	454.89	-1.15	-0.24	0.05	0.07	0.01	-3.02e-03
25	17	0.0	8.92	-3.32	-14.73	-3.74	5.31	0.29
25	17	35.83	8.83	-3.32	-14.73	-3.58	5.31	-0.95
25	17	71.67	6.91	-3.21	-12.40	-1.76	0.61	-1.64
25	17	107.50	6.17	-2.91	-13.74	-1.09	-3.92	-0.48
25	17	137.50	5.10	-2.21	-13.86	-0.84	3.83	-1.14
25	17	167.50	4.99	-2.09	-12.66	-0.89	-0.08	-1.40
25	17	197.50	4.93	-1.94	-13.76	-0.97	-3.88	-0.39
25	17	227.50	4.06	-1.34	-12.82	-0.94	3.86	-1.13
25	17	257.50	4.00	-1.23	-12.82	-0.95	-0.07	-1.41
25	17	287.50	3.95	-1.10	-12.65	-0.94	-3.92	-0.39
25	17	317.50	3.07	-0.97	-12.58	-0.44	3.54	-0.93
25	17	347.50	2.93	-1.02	-12.47	-0.67	-0.22	-1.43
25	17	377.50	2.77	-1.10	-12.43	-0.45	-4.01	-0.25
25	17	405.00	0.51	-1.40	-15.52	0.57	2.82	-0.16
25	17	432.50	0.59	-1.35	-15.36	1.08	-1.43	-0.78
25	17	439.58	0.20	-1.63	-14.45	0.86	-4.24	0.33
25	17	444.68	0.67	-0.97	-3.40	0.26	-1.65	0.23
25	17	449.79	0.58	-0.81	-1.06	0.20	-0.58	0.11
25	17	454.89	0.61	-0.45	0.73	0.02	-0.05	0.04
25	18	0.0	9.00	-3.40	-14.27	-4.00	5.14	0.28
25	18	35.83	8.91	-3.40	-14.27	-3.84	5.14	-0.92
25	18	71.67	6.95	-3.27	-11.97	-1.96	0.59	-1.59
25	18	107.50	6.19	-2.94	-13.30	-1.25	-3.79	-0.46
25	18	137.50	5.11	-2.23	-13.40	-0.96	3.70	-1.10
25	18	167.50	4.98	-2.12	-12.24	-0.98	-0.07	-1.35
25	18	197.50	4.90	-1.96	-13.31	-1.03	-3.75	-0.37
25	18	227.50	4.03	-1.38	-12.37	-0.98	3.73	-1.09
25	18	257.50	3.96	-1.27	-12.39	-0.98	-0.05	-1.36
25	18	287.50	3.91	-1.14	-12.23	-0.96	-3.79	-0.38
25	18	317.50	3.03	-1.00	-12.14	-0.45	3.42	-0.90
25	18	347.50	2.89	-1.04	-12.06	-0.67	-0.20	-1.38
25	18	377.50	2.74	-1.11	-12.03	-0.46	-3.88	-0.25
25	18	405.00	0.49	-1.38	-15.01	0.57	2.73	-0.15
25	18	432.50	0.55	-1.50	-14.89	1.07	-1.38	-0.74
25	18	439.58	0.17	-1.59	-14.03	0.87	-4.11	0.32
25	18	444.68	0.66	-0.95	-3.28	0.25	-1.60	0.22
25	18	449.79	0.57	-0.80	-1.02	0.20	-0.56	0.11
25	18	454.89	0.59	-0.44	0.71	0.02	-0.05	0.04
25	19	0.0	-0.35	22.61	-4.49	51.39	1.87	0.12
25	19	35.83	-5.95	22.61	-4.49	53.07	1.87	-0.36
25	19	71.67	-3.90	22.57	-4.66	44.07	0.24	-0.62
25	19	107.50	-3.70	23.28	-4.50	35.91	-1.40	-0.18
25	19	137.50	-5.60	19.54	-4.71	28.81	1.41	-0.43
25	19	167.50	-5.40	19.52	-4.73	24.25	7.82e-04	-0.53
25	19	197.50	-4.57	19.14	-4.69	19.77	-1.42	-0.15
25	19	227.50	-4.00	16.20	-4.78	15.49	1.43	-0.43
25	19	257.50	-3.23	16.03	-4.82	12.19	-2.59e-03	-0.54
25	19	287.50	-3.27	15.42	-4.76	8.22	-1.44	-0.15
25	19	317.50	-1.42	11.63	-4.73	6.76	1.34	-0.36
25	19	347.50	0.75	11.25	-4.74	3.07	-0.07	-0.55
25	19	377.50	2.30	10.62	-4.74	0.62	-1.50	-0.09
25	19	405.00	0.74	6.00	-5.85	-0.96	1.07	-0.06
25	19	432.50	1.44	5.82	-5.84	-2.23	-0.53	-0.29
25	19	439.58	1.24	4.85	-5.45	-2.89	-1.60	0.12
25	19	444.68	-3.28	0.44	-1.27	2.98	-0.62	0.08
25	19	449.79	1.29	1.57	-0.38	-0.18	-0.21	0.04
25	19	454.89	0.42	0.82	0.30	0.01	-0.02	0.01

M_S	**N memb.**	**V memb.**	**V orto**	**M memb.**	**M orto**	**T**
	-81.63	-3.40	-15.52	-4.00	-4.24	-1.64
	9.00	23.28	0.73	53.07	5.31	0.33

Macro	Tipo	Angolo 1-Z (gradi)
26	**Setto**	**0.0**

M_S	**CDC**	**Z**	**N memb.**	**V memb.**	**V orto**	**M memb.**	**M orto**	**T**
		cm	kN	kN	kN	kN m	kN m	kN m
26	1	0.0	-75.17	1.74	0.59	23.82	-0.25	0.02
26	1	35.83	-78.13	-0.54	0.38	19.85	-0.08	0.04
26	1	71.67	-77.44	-1.17	0.37	16.71	0.05	0.04
26	1	107.50	-75.58	-1.17	0.45	15.13	0.19	9.99e-03
26	1	137.50	-65.78	-0.43	0.43	12.75	-0.06	0.04

26	1	167.50	-63.51	-0.50	0.43	12.12	0.07	0.04
26	1	197.50	-60.91	-0.62	0.52	11.95	0.21	0.01
26	1	227.50	-50.25	0.28	0.44	10.53	-0.06	0.05
26	1	257.50	-47.45	0.27	0.45	10.35	0.07	0.05
26	1	287.50	-44.63	0.16	0.53	10.22	0.21	0.01
26	1	317.50	-33.83	1.30	0.40	4.29	-0.05	0.03
26	1	347.50	-31.08	1.22	0.42	8.32	0.07	0.05
26	1	377.50	-27.77	1.28	0.53	8.51	0.21	0.02
26	1	405.00	-16.36	2.38	0.76	2.94	9.67e-03	0.03
26	1	432.50	-14.67	2.43	0.78	5.34	0.22	0.01
26	1	439.58	-12.72	1.00	0.84	8.53	0.29	-0.07
26	1	444.68	-4.45	1.95	0.17	0.25	0.07	-0.01
26	1	449.79	-3.44	0.64	0.11	0.44	0.04	-3.93e-03
26	1	454.89	-1.12	-0.26	0.05	0.07	0.01	-2.81e-03
26	17	0.0	10.21	-3.70	-14.48	-4.13	5.22	0.28
26	17	35.83	10.11	-3.70	-14.48	-3.95	5.23	-0.94
26	17	71.67	8.02	-3.59	-12.21	-1.95	0.60	-1.62
26	17	107.50	7.23	-3.25	-13.51	-1.22	-3.85	-0.47
26	17	137.50	5.72	-2.44	-13.59	-0.94	3.75	-1.13
26	17	167.50	5.60	-2.32	-12.42	-0.98	-0.08	-1.38
26	17	197.50	5.53	-2.14	-13.49	-1.07	-3.80	-0.38
26	17	227.50	4.15	-1.47	-12.54	-0.97	3.77	-1.11
26	17	257.50	4.06	-1.36	-12.55	-0.95	-0.07	-1.39
26	17	287.50	3.99	-1.23	-12.40	-0.91	-3.83	-0.39
26	17	317.50	2.76	-1.48	-12.47	-0.14	3.50	-0.94
26	17	347.50	0.87	-1.59	-12.35	1.34	-0.22	-1.42
26	17	377.50	1.17	-1.71	-12.32	1.23	-3.98	-0.23
26	17	405.00	0.77	-1.89	-15.47	0.53	2.82	-0.14
26	17	432.50	0.85	-2.24	-15.32	1.12	-1.41	-0.75
26	17	439.58	0.18	-2.12	-14.50	1.18	-4.22	0.33
26	17	444.68	1.01	-0.96	-3.35	0.12	-1.63	0.22
26	17	449.79	0.64	-0.85	-1.06	0.22	-0.57	0.11
26	17	454.89	0.66	-0.47	0.71	0.02	-0.05	0.04
26	18	0.0	10.29	-3.79	-14.03	-4.41	5.05	0.27
26	18	35.83	10.18	-3.79	-14.03	-4.23	5.05	-0.91
26	18	71.67	8.05	-3.65	-11.78	-2.17	0.58	-1.57
26	18	107.50	7.23	-3.29	-13.08	-1.39	-3.72	-0.45
26	18	137.50	5.72	-2.48	-13.14	-1.06	3.62	-1.09
26	18	167.50	5.58	-2.34	-12.00	-1.07	-0.07	-1.33
26	18	197.50	5.50	-2.16	-13.05	-1.13	-3.67	-0.37
26	18	227.50	4.13	-1.52	-12.10	-1.01	3.64	-1.08
26	18	257.50	4.04	-1.41	-12.13	-0.98	-0.05	-1.34
26	18	287.50	3.97	-1.27	-11.99	-0.93	-3.71	-0.38
26	18	317.50	2.75	-1.48	-12.04	-0.17	3.38	-0.90
26	18	347.50	0.84	-1.59	-11.94	1.34	-0.21	-1.37
26	18	377.50	1.13	-1.70	-11.93	1.23	-3.84	-0.22
26	18	405.00	0.76	-1.85	-14.97	0.52	2.73	-0.14
26	18	432.50	0.84	-2.19	-14.85	1.09	-1.37	-0.73
26	18	439.58	0.17	-2.07	-13.91	1.15	-4.09	0.31
26	18	444.68	0.98	-0.95	-3.24	0.12	-1.58	0.22
26	18	449.79	0.62	-0.84	-1.02	0.21	-0.55	0.10
26	18	454.89	0.64	-0.46	0.69	0.02	-0.05	0.04
26	19	0.0	0.39	22.26	-4.35	50.43	1.82	0.12
26	19	35.83	-5.14	22.26	-4.35	52.10	1.82	-0.35
26	19	71.67	-3.08	23.64	-4.52	43.26	0.24	-0.61
26	19	107.50	-2.85	22.98	-4.36	35.24	-1.35	-0.18
26	19	137.50	-5.21	19.59	-4.50	28.49	1.35	-0.43
26	19	167.50	-4.93	19.57	-4.52	23.93	1.47e-03	-0.52
26	19	197.50	-4.07	19.18	-4.47	19.46	-1.35	-0.15
26	19	227.50	-4.02	16.31	-4.54	15.44	1.36	-0.42
26	19	257.50	-3.22	16.12	-4.58	12.11	-2.60e-04	-0.53
26	19	287.50	-3.28	15.47	-4.51	8.07	-1.37	-0.16
26	19	317.50	-1.99	10.95	-4.48	6.97	1.27	-0.35
26	19	347.50	-1.36	10.53	-4.47	5.26	-0.06	-0.54
26	19	377.50	-0.16	9.86	-4.47	2.58	-1.41	-0.11
26	19	405.00	-0.68	3.77	-5.85	-0.17	1.03	-0.07
26	19	432.50	-0.31	3.73	-5.83	0.05	-0.58	-0.30
26	19	439.58	-0.62	2.94	-5.48	-0.07	-1.64	0.17
26	19	444.68	-1.61	0.04	-1.13	2.09	-0.57	0.07
26	19	449.79	1.45	1.42	-0.36	-0.24	-0.20	0.03
26	19	454.89	0.40	0.67	0.28	0.01	-0.02	9.05e-03

M_S	**N memb.**	**V memb.**	**V orto**	**M memb.**	**M orto**	**T**
	-78.13	-3.79	-15.47	-4.41	-4.22	-1.62
	10.29	23.64	0.84	52.10	5.23	0.33

Macro	Tipo	Angolo 1-Z (gradi)
27	**Setto**	**0.0**

M_S	CDC	Z	N memb.	V memb.	V orto	M memb.	M orto	T
		cm	kN	kN	kN	kN m	kN m	kN m
27	1	0.0	-74.60	1.54	1.10	22.65	-0.53	-0.06
27	1	35.83	-77.52	-0.71	0.80	18.80	-0.19	0.05
27	1	71.67	-76.79	-1.33	0.79	15.77	0.09	0.09
27	1	107.50	-74.90	-1.35	0.91	14.28	0.39	9.06e-03
27	1	137.50	-65.14	-0.64	0.82	11.95	-0.12	0.06
27	1	167.50	-62.88	-0.71	0.82	11.37	0.12	0.06
27	1	197.50	-60.30	-0.85	0.97	11.24	0.39	2.45e-03
27	1	227.50	-49.73	0.01	0.86	9.85	-0.12	0.06
27	1	257.50	-46.97	-0.01	0.87	9.71	0.13	0.07
27	1	287.50	-44.19	-0.13	1.04	9.61	0.42	5.71e-03
27	1	317.50	-33.47	1.00	0.81	3.75	-0.10	0.06
27	1	347.50	-30.78	0.90	0.82	7.75	0.15	0.08
27	1	377.50	-27.49	0.95	0.98	8.01	0.41	-0.02
27	1	405.00	-16.06	2.18	0.58	2.57	-0.06	-6.99e-03
27	1	432.50	-14.42	2.15	0.61	4.88	0.10	0.04
27	1	439.58	-12.47	0.82	0.60	8.02	0.14	0.02
27	1	444.68	-4.57	1.69	0.41	0.31	0.15	-0.02
27	1	449.79	-3.41	0.52	0.18	0.43	0.07	-0.01
27	1	454.89	-1.12	-0.30	0.08	0.06	0.02	-6.56e-03
27	17	0.0	14.53	-4.87	-13.98	-6.07	5.05	0.26
27	17	35.83	14.24	-4.87	-13.98	-5.83	5.05	-0.92
27	17	71.67	10.76	-4.70	-11.86	-2.54	0.58	-1.59
27	17	107.50	9.25	-4.29	-13.09	-1.29	-3.73	-0.46
27	17	137.50	7.84	-3.25	-12.08	-1.01	3.62	-1.10
27	17	167.50	7.59	-3.11	-12.04	-1.14	-0.08	-1.34
27	17	197.50	7.46	-2.72	-13.06	-1.35	-3.68	-0.37
27	17	227.50	6.53	-2.16	-12.12	-1.48	3.64	-1.08
27	17	257.50	6.44	-2.01	-12.15	-1.63	-0.07	-1.35
27	17	287.50	6.37	-1.67	-12.01	-1.74	-3.70	-0.38
27	17	317.50	5.26	-1.19	-12.10	-1.28	3.40	-0.91
27	17	347.50	5.15	-1.13	-12.01	-1.97	-0.21	-1.38
27	17	377.50	4.93	-0.73	-12.01	-1.98	-3.85	-0.23
27	17	405.00	3.09	-2.02	-15.21	-0.84	2.78	-0.15
27	17	432.50	2.87	-2.30	-15.06	-1.05	-1.37	-0.75
27	17	439.58	2.74	-2.26	-14.13	-1.22	-4.14	0.30
27	17	444.68	0.44	-1.99	-3.31	0.84	-1.60	0.21
27	17	449.79	1.17	-1.08	-1.06	0.04	-0.56	0.10
27	17	454.89	0.67	-0.55	0.67	0.02	-0.05	0.03
27	19	0.0	0.32	23.46	-4.30	51.33	1.78	0.09
27	19	35.83	-5.30	23.46	-4.30	53.03	1.78	-0.35
27	19	71.67	-3.19	24.19	-4.45	43.96	0.22	-0.58
27	19	107.50	-2.93	23.54	-4.31	35.74	-1.34	-0.16
27	19	137.50	-5.14	20.12	-4.63	28.81	1.38	-0.42
27	19	167.50	-4.78	20.10	-4.64	24.13	1.32e-03	-0.52
27	19	197.50	-3.87	19.69	-4.62	19.53	-1.39	-0.14
27	19	227.50	-3.50	16.86	-4.70	15.36	1.41	-0.42
27	19	257.50	-2.68	16.66	-4.74	11.93	-1.06e-03	-0.52
27	19	287.50	-2.71	15.97	-4.74	7.81	-1.43	-0.14
27	19	317.50	-1.26	11.68	-4.79	6.53	1.35	-0.36
27	19	347.50	0.59	11.24	-4.79	3.18	-0.08	-0.54
27	19	377.50	1.94	10.53	-4.85	0.75	-1.53	-0.06
27	19	405.00	-0.23	4.11	-5.78	-0.60	1.10	-0.03
27	19	432.50	0.03	3.95	-5.77	-0.92	-0.48	-0.28
27	19	439.58	-5.32e-03	3.23	-5.44	-1.01	-1.55	0.05
27	19	444.68	-2.25	-0.11	-1.43	2.52	-0.66	0.09
27	19	449.79	1.51	1.35	-0.44	-0.27	-0.23	0.05
27	19	454.89	0.40	0.62	0.25	0.01	-0.02	0.01

M_S			N memb.	V memb.	V orto	M memb.	M orto	T
			-77.52	-4.87	-15.21	-6.07	-4.14	-1.59
			14.53	24.19	1.10	53.03	5.05	0.30

Macro	Tipo	Angolo 1-Z (gradi)
28	**Setto**	**0.0**

M_S	CDC	Z	N memb.	V memb.	V orto	M memb.	M orto	T
		cm	kN	kN	kN	kN m	kN m	kN m
28	1	0.0	-77.59	3.72	1.14	26.79	-0.54	-0.05
28	1	35.83	-80.47	1.50	0.81	22.20	-0.19	0.05
28	1	71.67	-79.71	0.87	0.80	18.42	0.09	0.09
28	1	107.50	-77.79	0.83	0.93	16.19	0.39	0.01

28	1	137.50	-68.06	0.41	0.84	13.53	-0.13	0.06
28	1	167.50	-65.78	0.31	0.84	12.67	0.12	0.07
28	1	197.50	-63.16	0.14	1.00	12.28	0.40	7.48e-03
28	1	227.50	-52.84	-8.17e-03	0.84	10.93	-0.12	0.07
28	1	257.50	-50.10	-0.05	0.85	10.78	0.13	0.07
28	1	287.50	-47.36	-0.20	1.01	10.65	0.40	0.01
28	1	317.50	-37.33	-0.16	0.75	4.55	-0.09	0.06
28	1	347.50	-34.86	-0.26	0.77	9.09	0.13	0.08
28	1	377.50	-31.94	-0.27	0.92	9.23	0.38	8.95e-03
28	1	405.00	-21.57	-0.62	0.69	8.55	-0.03	0.02
28	1	432.50	-18.91	-0.69	0.71	8.76	0.16	0.04
28	1	439.58	-17.13	-2.76	0.73	13.34	0.21	-8.88e-03
28	1	444.68	-3.93	0.86	0.40	-0.33	0.15	-0.02
28	1	449.79	-3.57	0.19	0.20	0.25	0.07	-0.01
28	1	454.89	-1.40	-0.25	0.09	0.06	0.03	-6.21e-03
28	17	0.0	17.28	-5.33	-13.70	-7.39	4.95	0.25
28	17	35.83	16.91	-5.33	-13.70	-7.13	4.95	-0.92
28	17	71.67	12.58	-5.05	-11.66	-3.00	0.57	-1.57
28	17	107.50	10.64	-4.14	-12.85	-1.40	-3.66	-0.46
28	17	137.50	8.63	-3.45	-11.89	-1.03	3.56	-1.09
28	17	167.50	8.31	-3.29	-11.85	-1.17	-0.08	-1.33
28	17	197.50	8.12	-2.72	-11.74	-1.39	-3.62	-0.37
28	17	227.50	6.68	-2.34	-11.92	-1.49	3.58	-1.07
28	17	257.50	6.55	-2.18	-11.95	-1.63	-0.06	-1.33
28	17	287.50	6.48	-1.86	-11.79	-1.73	-3.59	-0.37
28	17	317.50	5.04	-1.58	-11.78	-0.96	3.33	-0.88
28	17	347.50	4.92	-1.57	-11.71	-1.50	-0.19	-1.35
28	17	377.50	4.66	-1.57	-11.73	-1.38	-3.73	-0.26
28	17	405.00	3.28	-2.53	-14.68	-1.26	2.76	-0.34
28	17	432.50	2.98	-3.21	-15.03	-0.95	-1.32	-0.79
28	17	439.58	2.63	-2.74	-13.98	-1.10	-4.08	0.30
28	17	444.68	0.49	-2.16	-3.36	0.83	-1.58	0.21
28	17	449.79	1.22	-1.15	-1.16	0.03	-0.55	0.10
28	17	454.89	0.68	-0.56	0.63	0.02	-0.05	0.03
28	19	0.0	-0.49	24.19	-4.14	52.96	1.72	0.09
28	19	35.83	-6.23	24.19	-4.14	54.66	1.72	-0.34
28	19	71.67	-4.09	24.89	-4.30	45.30	0.22	-0.57
28	19	107.50	-3.84	24.22	-4.15	36.81	-1.29	-0.17
28	19	137.50	-5.74	20.46	-4.46	29.44	1.34	-0.41
28	19	167.50	-5.49	20.43	-4.47	24.69	3.26e-03	-0.51
28	19	197.50	-4.59	20.00	-4.46	20.03	-1.34	-0.15
28	19	227.50	-3.96	17.05	-4.51	15.61	1.35	-0.41
28	19	257.50	-3.13	16.84	-4.54	12.15	1.18e-03	-0.51
28	19	287.50	-3.91	16.16	-4.52	7.60	-1.37	-0.14
28	19	317.50	-1.28	12.35	-4.48	6.52	1.28	-0.34
28	19	347.50	0.57	11.91	-4.48	2.99	-0.06	-0.52
28	19	377.50	2.14	11.13	-4.54	0.42	-1.42	-0.11
28	19	405.00	1.61	6.95	-5.62	-1.01	1.05	-0.14
28	19	432.50	2.22	5.70	-5.78	-2.69	-0.51	-0.30
28	19	439.58	1.80	5.31	-5.42	-3.48	-1.58	0.12
28	19	444.68	-3.76	0.58	-1.33	3.49	-0.61	0.08
28	19	449.79	1.53	1.93	-0.47	-0.20	-0.22	0.04
28	19	454.89	0.49	0.78	0.22	-2.48e-03	-0.02	0.01
M_S			**N memb.**	**V memb.**	**V orto**	**M memb.**	**M orto**	**T**
			-80.47	-5.33	-15.03	-7.39	-4.08	-1.57
			17.28	24.89	1.14	54.66	4.95	0.30

Macro	Tipo	Angolo 1-Z (gradi)
29	**Setto**	**0.0**

M_S	**CDC**	**Z**	**N memb.**	**V memb.**	**V orto**	**M memb.**	**M orto**	**T**
		cm	kN	kN	kN	kN m	kN m	kN m
29	1	0.0	-78.02	4.58	1.11	27.98	-0.51	-0.02
29	1	35.83	-80.89	2.37	0.75	23.10	-0.17	0.05
29	1	71.67	-80.16	1.74	0.75	18.97	0.09	0.07
29	1	107.50	-78.28	1.68	0.93	16.38	0.38	8.14e-03
29	1	137.50	-68.62	0.46	0.90	13.55	-0.13	0.07
29	1	167.50	-66.41	0.35	0.91	12.59	0.13	0.07
29	1	197.50	-63.84	0.17	1.11	12.13	0.43	8.04e-03
29	1	227.50	-53.60	-0.51	0.94	10.82	-0.13	0.07
29	1	257.50	-50.91	-0.56	0.95	10.75	0.15	0.08
29	1	287.50	-48.21	-0.72	1.14	10.72	0.45	0.01
29	1	317.50	-38.26	-0.95	0.90	4.63	-0.11	0.07
29	1	347.50	-35.86	-1.07	0.92	9.44	0.16	0.09
29	1	377.50	-32.97	-1.08	1.10	9.79	0.46	2.24e-03

29	1	405.00	-22.57	-1.70	0.91	9.35	-0.03	0.03
29	1	432.50	-19.94	-1.78	0.93	9.83	0.22	0.03
29	1	439.58	-18.22	-4.05	0.97	14.76	0.29	-0.04
29	1	444.68	-3.70	0.37	0.39	-0.43	0.14	-0.02
29	1	449.79	-3.53	-0.04	0.19	0.23	0.07	-0.01
29	1	454.89	-1.40	-0.32	0.08	0.05	0.03	-5.77e-03
29	17	0.0	20.20	1.30	-13.23	-9.39	4.78	0.23
29	17	35.83	19.77	1.30	-13.23	-9.06	4.79	-0.91
29	17	71.67	13.98	-0.56	-11.31	-3.52	0.56	-1.54
29	17	107.50	11.35	0.02	-11.17	-1.31	-3.53	-0.46
29	17	137.50	8.71	-3.94	-11.59	-0.70	3.46	-1.08
29	17	167.50	8.28	-3.14	-11.56	-0.85	-0.08	-1.31
29	17	197.50	8.07	-2.68	-11.47	-1.14	-3.53	-0.37
29	17	227.50	6.52	-2.91	-11.64	-1.27	3.47	-1.06
29	17	257.50	6.40	-2.72	-11.69	-1.50	-0.06	-1.32
29	17	287.50	5.79	-2.32	-11.52	-2.32	-3.51	-0.37
29	17	317.50	4.49	-2.08	-11.54	-1.39	3.27	-0.88
29	17	347.50	3.47	-2.08	-11.48	-2.40	-0.19	-1.34
29	17	377.50	4.50	-2.05	-11.50	-1.27	-3.64	-0.27
29	17	405.00	2.79	-2.75	-14.39	-0.97	2.69	-0.34
29	17	432.50	4.16	-3.38	-14.73	-1.51	-1.30	-0.78
29	17	439.58	0.84	-3.37	-13.73	1.71	-4.01	0.30
29	17	444.68	2.39	-2.31	-3.29	-0.40	-1.54	0.21
29	17	449.79	1.13	-1.29	-1.15	5.20e-03	-0.54	0.10
29	17	454.89	0.59	-0.59	0.59	7.96e-03	-0.05	0.03
29	19	0.0	-2.02	24.79	-4.00	54.06	1.67	0.09
29	19	35.83	-7.75	24.79	-4.00	55.73	1.67	-0.34
29	19	71.67	-5.51	25.45	-4.17	46.19	0.22	-0.57
29	19	107.50	-5.14	24.82	-4.03	37.57	-1.25	-0.17
29	19	137.50	-7.88	21.27	-4.43	30.60	1.33	-0.41
29	19	167.50	-6.58	21.25	-4.43	25.32	1.27e-03	-0.50
29	19	197.50	-5.60	20.80	-4.44	20.60	-1.34	-0.14
29	19	227.50	-4.80	17.72	-4.49	16.12	1.35	-0.41
29	19	257.50	-3.89	17.50	-4.52	12.56	-2.15e-04	-0.51
29	19	287.50	-4.43	16.80	-4.51	8.03	-1.36	-0.14
29	19	317.50	-1.83	12.70	-4.49	6.71	1.28	-0.34
29	19	347.50	0.29	12.23	-4.48	3.04	-0.06	-0.52
29	19	377.50	1.90	11.40	-4.55	0.45	-1.43	-0.10
29	19	405.00	1.12	7.17	-5.62	-0.76	1.06	-0.13
29	19	432.50	1.71	6.26	-5.78	-2.42	-0.50	-0.29
29	19	439.58	1.33	5.49	-5.46	-3.15	-1.58	0.12
29	19	444.68	-3.77	0.74	-1.35	3.41	-0.61	0.08
29	19	449.79	1.42	2.00	-0.51	-0.19	-0.22	0.04
29	19	454.89	0.46	0.82	0.19	-2.53e-03	-0.03	0.01
M_S			**N memb.**	**V memb.**	**V orto**	**M memb.**	**M orto**	**T**
			-80.89	-4.05	-14.73	-9.39	-4.01	-1.54
			20.20	25.45	1.14	55.73	4.79	0.30

Macro	Tipo	Angolo 1-Z (gradi)
30	**Setto**	**0.0**

M_S	**CDC**	**Z**	**N memb.**	**V memb.**	**V orto**	**M memb.**	**M orto**	**T**
		cm	kN	kN	kN	kN m	kN m	kN m
30	1	0.0	-74.26	3.63	1.33	24.59	-0.57	0.02
30	1	35.83	-77.34	1.33	0.80	19.79	-0.19	0.05
30	1	71.67	-76.95	0.65	0.85	15.61	0.10	0.05
30	1	107.50	-75.31	0.59	1.16	13.11	0.45	-3.65e-03
30	1	137.50	-66.12	-0.59	1.06	10.48	-0.16	0.07
30	1	167.50	-63.95	-0.68	1.07	9.78	0.16	0.08
30	1	197.50	-61.40	-0.86	1.30	9.60	0.50	2.35e-03
30	1	227.50	-51.24	-0.96	1.09	8.56	-0.16	0.08
30	1	257.50	-48.53	-0.99	1.10	8.66	0.17	0.09
30	1	287.50	-45.82	-1.15	1.28	8.77	0.52	7.47e-03
30	1	317.50	-35.86	-0.54	1.11	3.00	-0.13	0.07
30	1	347.50	-33.44	-0.66	1.14	7.41	0.21	0.11
30	1	377.50	-30.56	-0.67	1.33	7.63	0.57	-5.66e-03
30	1	405.00	-20.44	-0.59	1.33	6.93	-0.04	0.03
30	1	432.50	-17.82	-0.68	1.35	7.09	0.33	0.02
30	1	439.58	-15.95	-2.42	1.43	11.38	0.44	-0.09
30	1	444.68	-4.37	0.33	0.46	-0.10	0.16	-0.03
30	1	449.79	-3.49	-0.11	0.25	0.23	0.09	-0.02
30	1	454.89	-1.38	-0.32	0.09	0.04	0.03	-8.09e-03
30	17	0.0	-1.52	8.92	-10.84	9.45	4.50	0.15
30	17	35.83	-1.10	8.92	-10.84	10.34	4.50	-0.92
30	17	71.67	2.51	9.93	-10.86	6.89	0.52	-1.51

30	17	107.50	10.55	9.67	-10.76	-1.92	-3.43	-0.44
30	17	137.50	7.89	7.88	-11.40	-0.21	3.41	-1.07
30	17	167.50	7.05	7.78	-11.35	0.06	-0.08	-1.31
30	17	197.50	5.05	7.44	-11.27	-1.79	-3.42	-0.39
30	17	227.50	1.96	-0.18	-11.18	-3.35	3.33	-1.05
30	17	257.50	2.71	-2.87	-11.22	-3.13	-0.07	-1.30
30	17	287.50	4.53	-2.34	-11.08	-2.33	-3.37	-0.38
30	17	317.50	2.23	-2.92	-11.30	-2.87	3.18	-0.89
30	17	347.50	1.91	-2.86	-11.18	-2.94	-0.20	-1.33
30	17	377.50	2.14	-2.71	-11.19	-2.51	-3.56	-0.26
30	17	405.00	2.77	-3.61	-13.60	-1.20	2.57	-0.33
30	17	432.50	3.18	-3.94	-13.90	-0.84	-1.20	-0.74
30	17	439.58	1.28	-4.06	-12.98	1.21	-3.75	0.26
30	17	444.68	2.31	-3.06	-2.95	-0.31	-1.41	0.17
30	17	449.79	1.33	-1.72	-1.07	-0.13	-0.49	0.07
30	17	454.89	0.49	-0.72	0.54	-0.01	-0.05	0.02
30	18	0.0	-1.76	8.56	-12.07	9.46	4.34	0.15
30	18	35.83	-1.34	8.56	-12.07	10.35	4.35	-0.89
30	18	71.67	2.44	9.74	-10.47	6.77	0.50	-1.46
30	18	107.50	10.63	9.44	-10.39	-2.18	-3.31	-0.42
30	18	137.50	8.05	7.69	-11.00	-0.49	3.29	-1.03
30	18	167.50	7.22	7.59	-10.96	-0.20	-0.07	-1.27
30	18	197.50	5.25	6.53	-10.89	-1.91	-3.31	-0.37
30	18	227.50	4.09	-3.05	-10.78	-1.82	3.22	-1.02
30	18	257.50	4.30	-2.81	-10.84	-1.93	-0.07	-1.26
30	18	287.50	4.57	-3.36	-10.71	-2.23	-3.26	-0.37
30	18	317.50	2.24	-2.78	-10.91	-2.74	3.07	-0.86
30	18	347.50	1.94	-2.71	-10.81	-2.84	-0.18	-1.29
30	18	377.50	2.15	-2.56	-10.84	-2.44	-3.44	-0.25
30	18	405.00	2.74	-3.32	-13.17	-1.16	2.49	-0.32
30	18	432.50	3.21	-3.68	-13.49	-0.88	-1.16	-0.72
30	18	439.58	1.20	-3.79	-12.62	1.24	-3.64	0.25
30	18	444.68	2.27	-2.89	-2.87	-0.32	-1.37	0.17
30	18	449.79	1.29	-1.61	-1.04	-0.13	-0.48	0.07
30	18	454.89	0.47	-0.68	0.52	-0.01	-0.05	0.02
30	19	0.0	-6.41	25.87	-4.06	55.02	1.67	0.08
30	19	35.83	-11.83	25.87	-4.06	56.67	1.67	-0.34
30	19	71.67	-9.14	27.13	-4.11	47.24	0.21	-0.57
30	19	107.50	-8.19	26.82	-4.13	39.00	-1.28	-0.16
30	19	137.50	-8.77	22.74	-4.59	31.74	1.39	-0.41
30	19	167.50	-7.60	22.74	-4.54	26.49	0.03	-0.51
30	19	197.50	-6.46	22.26	-4.56	21.64	-1.35	-0.15
30	19	227.50	-5.41	18.83	-4.40	17.00	1.32	-0.41
30	19	257.50	-4.39	18.59	-4.41	13.22	9.26e-04	-0.51
30	19	287.50	-4.93	17.83	-4.39	8.39	-1.32	-0.15
30	19	317.50	-2.26	12.35	-4.41	7.18	1.25	-0.34
30	19	347.50	-1.54	11.82	-4.37	5.30	-0.07	-0.52
30	19	377.50	1.89	10.95	-4.42	0.83	-1.39	-0.11
30	19	405.00	0.43	5.40	-5.49	0.37	1.02	-0.13
30	19	432.50	0.81	4.52	-5.63	-0.77	-0.50	-0.29
30	19	439.58	0.54	3.72	-5.35	-1.17	-1.54	0.15
30	19	444.68	-1.92	0.40	-1.18	2.37	-0.55	0.06
30	19	449.79	1.58	1.68	-0.50	-0.28	-0.20	0.03
30	19	454.89	0.40	0.60	0.16	-3.28e-03	-0.02	8.87e-03

M_S	**N memb.**	**V memb.**	**V orto**	**M memb.**	**M orto**	**T**
	-77.34	-4.06	-13.90	-3.35	-3.75	-1.51
	10.63	27.13	1.43	56.67	4.50	0.26

Macro	Tipo	Angolo 1-Z (gradi)
31	**Setto**	**0.0**

M_S	**CDC**	**Z**	**N memb.**	**V memb.**	**V orto**	**M memb.**	**M orto**	**T**
		cm	kN	kN	kN	kN m	kN m	kN m
31	1	0.0	-838.04	3.01	83.28	11.82	-18.03	-0.07
31	1	35.83	-758.78	3.03	18.14	9.88	0.14	-0.11
31	1	71.67	-650.59	2.93	0.25	7.25	2.00	-0.10
31	1	107.50	-574.55	2.98	-0.59	4.48	1.93	-0.10
31	1	137.50	-486.82	2.93	2.01	-1.16	0.85	-0.10
31	1	167.50	-442.02	2.91	-0.37	-6.97	1.03	-0.10
31	1	197.50	-406.19	2.95	-4.61	-14.09	0.43	-0.10
31	1	227.50	-346.22	2.88	1.45	-30.24	0.62	-0.10
31	1	257.50	-314.87	2.84	0.33	-40.08	0.80	-0.10
31	1	287.50	-286.40	2.90	-3.54	-38.56	0.32	-0.10
31	1	317.50	-232.54	3.36	1.14	-40.83	0.50	-0.10
31	1	347.50	-205.21	3.29	-0.35	-43.90	0.47	-0.10

31	1	377.50	-182.17	3.29	-0.34	-53.80	0.33	-0.10
31	1	405.00	-142.22	3.86	-0.98	-61.77	0.05	-0.09
31	1	432.50	-116.08	3.84	-2.00	-23.62	-0.42	-0.09
31	1	460.00	-91.87	3.67	-4.89	-7.79	-1.47	-0.06
31	17	0.0	0.18	-420.90	0.03	782.51	-1.32e-03	-9.19
31	17	35.83	0.19	-420.90	0.03	769.17	4.53e-04	-9.44
31	17	71.67	0.21	-449.57	-3.91e-03	662.11	-2.21e-04	-10.46
31	17	107.50	0.21	-415.21	6.08e-05	567.90	5.35e-04	-10.13
31	17	137.50	0.24	-337.88	-0.01	331.58	3.77e-03	-10.21
31	17	167.50	0.22	-340.15	-7.72e-03	143.09	9.35e-04	-10.29
31	17	197.50	0.20	-307.95	-0.01	34.75	1.72e-04	-10.16
31	17	227.50	0.23	-226.84	0.05	-38.35	2.34e-03	-10.20
31	17	257.50	0.22	-229.56	-0.08	-79.76	-0.01	-10.28
31	17	287.50	0.13	-213.50	-0.06	-109.38	-0.06	-10.15
31	17	317.50	0.22	-115.38	0.27	-137.08	-0.04	-10.16
31	17	347.50	1.13	-115.18	4.39e-03	-165.84	-3.50e-03	-10.25
31	17	377.50	0.59	-99.44	-0.13	-192.05	2.28e-05	-10.05
31	17	405.00	2.24	398.61	0.60	-176.46	-0.02	-9.97
31	17	432.50	0.18	408.73	-0.23	-154.10	0.07	-10.13
31	17	460.00	0.03	387.83	-0.07	-107.45	-0.01	-8.82
31	18	0.0	0.17	-433.51	-0.05	758.49	-1.30e-03	-8.89
31	18	35.83	0.19	-433.51	-0.05	745.77	2.26e-04	-9.12
31	18	71.67	0.03	-456.66	-9.45e-04	641.64	-1.46e-04	-10.11
31	18	107.50	0.20	-416.09	6.53e-04	550.01	5.36e-04	-9.80
31	18	137.50	0.23	-349.97	-0.01	319.73	3.52e-03	-9.87
31	18	167.50	0.22	-344.05	-7.34e-03	136.95	1.02e-03	-9.95
31	18	197.50	0.19	-317.81	-0.01	32.81	5.75e-03	-9.82
31	18	227.50	0.29	-228.74	-0.05	-37.10	1.17e-03	-9.86
31	18	257.50	0.33	-230.76	-0.08	-65.76	-0.01	-9.94
31	18	287.50	0.39	-223.73	-0.06	-101.06	-0.06	-9.81
31	18	317.50	0.82	-122.05	0.26	-142.12	-0.02	-9.82
31	18	347.50	1.21	-126.66	5.22e-03	-160.55	3.87e-03	-9.91
31	18	377.50	0.59	-110.21	-0.14	-187.55	3.91e-03	-9.72
31	18	405.00	2.12	386.78	0.60	-172.89	-0.02	-9.64
31	18	432.50	0.09	396.55	-0.23	-152.32	0.07	-9.80
31	18	460.00	-0.02	376.31	-0.07	-108.01	-0.02	-8.53
31	19	0.0	340.59	115.21	-19.06	213.55	2.27	-3.55
31	19	35.83	341.77	115.21	-19.06	209.35	2.27	-3.64
31	19	71.67	348.63	118.57	0.51	190.27	-1.08	-4.01
31	19	107.50	361.49	115.78	12.95	171.65	1.41	-3.91
31	19	137.50	356.32	119.40	-11.64	139.67	1.90	-3.94
31	19	167.50	336.71	120.46	-0.97	112.56	-0.01	-3.97
31	19	197.50	311.58	119.45	0.64	83.25	-0.25	-3.93
31	19	227.50	266.46	121.03	-10.25	43.71	1.78	-3.95
31	19	257.50	231.18	122.42	-0.87	20.43	0.06	-3.97
31	19	287.50	197.09	121.49	-4.17	1.21	-0.69	-3.93
31	19	317.50	143.19	126.80	-7.60	-50.68	0.98	-3.93
31	19	347.50	109.69	128.32	-1.39	-85.57	-0.38	-3.97
31	19	377.50	82.22	128.58	-2.38	-87.74	-0.93	-3.89
31	19	405.00	52.24	164.12	-6.34	-63.03	0.34	-3.86
31	19	432.50	33.02	168.44	0.18	-62.52	-0.46	-3.92
31	19	460.00	14.91	159.87	-0.15	-58.73	-0.46	-3.41

M_S	**N memb.**	**V memb.**	**V orto**	**M memb.**	**M orto**	**T**
	-838.04	-456.66	-19.06	-192.05	-18.03	-10.46
	361.49	408.73	83.28	782.51	2.27	-0.06

Macro	Tipo	Angolo 1-X (gradi)
1	**Guscio**	**0.0**

M_G	**CDC**	**Nodo**	**N max**	**N min**	**N 1**	**N 2**	**N 1-2**	**M max**	**M min**	**M 1**	**M 2**	**M 1-2**
			kN/ m	kN/ m	kN/ m	kN/ m	kN/ m	kN	kN	kN	kN	kN
1	17	1	-0.59	-0.78	-0.66	-0.71	-8.97e-02	2.37	0.11	2.36	0.12	0.18
1	17	2	-1.09	-1.52	-1.47	-1.13	-0.13	3.89	0.22	2.43	1.68	-1.79
1	17	3	-1.25	-3.54	-3.34	-1.45	-0.65	3.10	8.71e-02	2.95	0.23	-0.64
1	17	4	-0.55	-5.33	-5.01	-0.87	-1.19	4.21	0.13	3.73	0.60	-1.31
1	17	5	-0.61	-6.78	-6.47	-0.92	-1.35	3.83	-0.31	3.11	0.41	-1.57
1	17	6	-0.55	-8.23	-7.95	-0.84	-1.44	3.67	-0.60	2.68	0.39	-1.80
1	17	7	-0.56	-9.62	-9.39	-0.79	-1.43	3.48	-0.91	2.23	0.35	-1.98
1	17	8	-0.58	-10.86	-10.68	-0.76	-1.36	3.26	-1.24	1.72	0.30	-2.14
1	17	9	-0.63	-11.92	-11.78	-0.78	-1.28	2.92	-1.61	1.08	0.23	-2.23
1	17	10	1.18	-13.32	-13.17	1.03	-1.46	2.28	-2.14	0.13	8.42e-03	-2.20
1	17	11	-2.20	-12.16	-12.03	-2.34	-1.16	2.46	-1.54	0.78	0.14	-1.97
1	17	12	1.27	-0.33	0.77	0.17	-0.74	5.07	-2.89	1.42	0.76	-3.96
1	17	13	14.66	2.59	14.51	2.74	-1.32	3.32	-1.45	1.75	0.12	-2.24
1	17	14	16.48	-1.23	16.36	-1.11	-1.46	4.32	-1.57	2.32	0.42	-2.78

1	17	15	14.95	0.65	14.87	0.73	-1.05	3.88	-2.23	1.45	0.20	-2.99
1	17	16	14.11	0.54	14.04	0.62	-1.01	3.72	-2.56	1.00	0.16	-3.11
1	17	17	13.28	1.25e-02	13.21	8.85e-02	-1.00	3.59	-2.77	0.70	0.12	-3.17
1	17	18	12.39	1.48e-02	12.31	9.61e-02	-1.00	3.47	-2.94	0.44	9.32e-02	-3.20
1	17	19	11.43	1.45e-02	11.34	0.10	-1.00	3.36	-3.06	0.23	6.52e-02	-3.21
1	17	20	10.42	1.19e-02	10.32	0.11	-0.99	3.16	-3.23	-8.96e-02	2.43e-02	-3.19
1	17	21	1.36	-0.69	0.56	0.11	-1.00	2.84	-3.43	-0.58	-1.11e-02	-3.12
1	17	22	1.47	-0.63	0.51	0.33	-1.05	2.22	-3.79	-1.34	-0.23	-2.95
1	17	23	-1.25	-6.58	-6.43	-1.39	-0.86	2.30	-2.77	-0.47	-1.49e-03	-2.52
1	17	24	0.73	-0.49	0.17	6.73e-02	-0.61	4.68	-4.36	0.24	8.46e-02	-4.52
1	17	25	6.56	0.79	6.34	1.02	-1.12	3.04	-2.14	0.88	2.75e-02	-2.55
1	17	26	6.48	-0.87	6.20	-0.59	-1.41	4.12	-2.08	1.73	0.31	-3.02
1	17	27	4.48	-9.95e-02	4.20	0.19	-1.11	3.73	-2.71	0.94	8.70e-02	-3.19
1	17	28	3.15	-0.28	2.78	9.55e-02	-1.07	3.57	-2.99	0.53	5.16e-02	-3.27
1	17	29	2.01	-0.54	1.43	4.50e-02	-1.07	3.45	-3.17	0.26	2.30e-02	-3.30
1	17	30	1.11	-1.03	8.24e-02	-2.43e-04	-1.07	3.32	-3.31	7.76e-03	-6.11e-04	-3.31
1	17	31	0.58	-1.89	-1.27	-4.54e-02	-1.07	3.17	-3.44	-0.24	-2.40e-02	-3.30
1	17	32	0.30	-3.02	-2.63	-9.58e-02	-1.07	3.00	-3.57	-0.52	-5.25e-02	-3.27
1	17	33	0.11	-4.35	-4.06	-0.19	-1.11	2.71	-3.73	-0.93	-8.77e-02	-3.19
1	17	34	0.88	-6.36	-6.07	0.59	-1.41	2.08	-4.12	-1.73	-0.31	-3.02
1	17	35	-0.77	-6.47	-6.24	-1.00	-1.12	2.13	-3.04	-0.88	-2.78e-02	-2.55
1	17	36	0.49	-0.72	-0.16	-6.54e-02	-0.60	4.35	-4.69	-0.25	-8.73e-02	-4.52
1	17	37	6.52	1.24	6.37	1.39	-0.86	2.76	-2.30	0.46	9.62e-04	-2.52
1	17	38	0.63	-1.48	-0.53	-0.32	-1.05	3.78	-2.22	1.34	0.23	-2.95
1	17	39	0.69	-1.36	-0.56	-0.11	-1.00	3.43	-2.84	0.58	1.03e-02	-3.12
1	17	40	-1.22e-02	-10.39	-10.29	-0.11	-1.00	3.23	-3.16	8.96e-02	-2.46e-02	-3.19
1	17	41	-1.48e-02	-11.41	-11.33	-0.10	-1.00	3.06	-3.36	-0.23	-6.60e-02	-3.21
1	17	42	-1.51e-02	-12.38	-12.30	-9.68e-02	-1.00	2.94	-3.47	-0.43	-9.40e-02	-3.20
1	17	43	-1.27e-02	-13.28	-13.20	-8.90e-02	-1.00	2.77	-3.59	-0.70	-0.12	-3.17
1	17	44	-0.54	-14.11	-14.03	-0.62	-1.01	2.56	-3.72	-1.00	-0.16	-3.11
1	17	45	-0.65	-14.96	-14.88	-0.73	-1.06	2.23	-3.89	-1.45	-0.20	-2.99
1	17	46	1.23	-16.49	-16.37	1.11	-1.46	1.57	-4.32	-2.33	-0.42	-2.79
1	17	47	-2.59	-14.67	-14.52	-2.74	-1.32	1.45	-3.33	-1.76	-0.12	-2.24
1	17	48	0.33	-1.27	-0.77	-0.17	-0.74	2.87	-5.09	-1.44	-0.77	-3.97
1	17	49	12.17	2.21	12.03	2.34	-1.16	1.53	-2.46	-0.78	-0.14	-1.97
1	17	50	13.32	-1.18	13.18	-1.03	-1.46	2.13	-2.27	-0.13	-9.46e-03	-2.20
1	17	51	11.93	0.64	11.78	0.78	-1.28	1.61	-2.92	-1.08	-0.23	-2.22
1	17	52	10.87	0.58	10.69	0.76	-1.36	1.24	-3.25	-1.71	-0.30	-2.13
1	17	53	9.63	0.56	9.40	0.79	-1.43	0.91	-3.48	-2.23	-0.35	-1.98
1	17	54	8.24	0.56	7.96	0.84	-1.44	0.60	-3.67	-2.68	-0.39	-1.80
1	17	55	6.79	0.61	6.48	0.92	-1.35	0.32	-3.83	-3.10	-0.41	-1.57
1	17	56	5.34	0.55	5.02	0.87	-1.19	-0.13	-4.21	-3.73	-0.60	-1.31
1	17	57	3.55	1.25	3.35	1.45	-0.65	-8.58e-02	-3.10	-2.95	-0.23	-0.64
1	17	58	1.52	1.09	1.48	1.13	-0.13	-0.23	-3.90	-2.44	-1.69	-1.80
1	17	59	0.78	0.59	0.66	0.71	-8.96e-02	-0.11	-2.37	-2.36	-0.12	0.18
1	17	60	-1.24	-1.32	-1.24	-1.32	-1.10e-02	-5.62e-02	-2.55	-2.51	-8.92e-02	0.29
1	17	61	1.83	0.87	0.99	1.71	-0.31	2.00	0.58	1.83	0.76	-0.47
1	17	62	1.99	-0.99	-0.31	1.31	-1.25	5.08	0.81	4.69	1.20	-1.24
1	17	63	2.53	-4.78	-4.11	1.87	-2.11	3.83	0.25	3.13	0.95	-1.42
1	17	64	2.37	-6.06	-5.27	1.58	-2.46	3.89	-0.15	2.89	0.86	-1.75
1	17	65	8.10e-02	-7.45	-6.40	-0.96	-2.60	3.83	-0.49	2.54	0.80	-1.97
1	17	66	-0.17	-8.37	-7.47	-1.08	-2.58	3.70	-0.87	2.10	0.73	-2.18
1	17	67	-0.21	-9.12	-8.39	-0.94	-2.44	3.53	-1.28	1.61	0.64	-2.35
1	17	68	-0.29	-9.70	-9.12	-0.88	-2.27	3.31	-1.67	1.10	0.55	-2.47
1	17	69	-0.34	-9.60	-9.05	-0.89	-2.18	2.96	-2.07	0.57	0.32	-2.51
1	17	70	0.39	-9.59	-9.31	0.12	-1.64	1.51	-3.52	-1.86	-0.15	-2.36
1	17	71	1.81	-1.01	1.13	-0.33	-1.20	3.34	-1.85	1.12	0.37	-2.57
1	17	72	11.63	-0.53	11.39	-0.28	-1.71	5.76	-0.73	4.09	0.94	-2.84
1	17	73	11.39	-1.33	11.07	-1.01	-1.98	4.28	-2.05	1.70	0.53	-3.11
1	17	74	11.71	-1.01	11.45	-0.74	-1.83	4.19	-2.53	1.28	0.37	-3.33
1	17	75	11.25	-0.93	10.97	-0.65	-1.81	4.10	-2.83	0.95	0.32	-3.45
1	17	76	10.66	-0.89	10.36	-0.59	-1.83	3.99	-3.07	0.66	0.26	-3.52
1	17	77	1.81	-2.00	0.36	-0.55	-1.85	3.88	-3.24	0.43	0.22	-3.56
1	17	78	-0.10	-9.35	-8.95	-0.50	-1.87	3.77	-3.37	0.22	0.17	-3.57
1	17	79	-1.24e-02	-8.60	-8.16	-0.45	-1.90	3.57	-3.53	-7.17e-02	0.11	-3.55
1	17	80	9.99e-02	-7.81	-7.32	-0.40	-1.92	3.30	-3.68	-0.40	2.08e-02	-3.48
1	17	81	0.26	-6.85	-6.23	-0.36	-2.00	2.93	-3.77	-0.73	-0.11	-3.34
1	17	82	9.46e-02	-6.03	-5.54	-0.40	-1.66	1.48	-5.17	-3.14	-0.55	-3.06
1	17	83	1.21	-1.23	4.94e-02	-6.75e-02	-1.22	3.19	-2.91	0.21	7.86e-02	-3.05
1	17	84	5.42	-1.11	4.92	-0.61	-1.74	5.57	-1.32	3.55	0.70	-3.14
1	17	85	4.92	-1.08	3.96	-0.12	-2.21	4.12	-2.72	1.12	0.28	-3.39
1	17	86	4.36	-1.04	3.33	-7.09e-03	-2.13	4.02	-3.12	0.78	0.13	-3.55
1	17	87	3.51	-1.27	2.25	-4.43e-03	-2.11	3.92	-3.35	0.49	8.21e-02	-3.63
1	17	88	2.75	-1.62	1.15	-1.90e-02	-2.11	3.80	-3.54	0.23	3.60e-02	-3.67
1	17	89	2.13	-2.08	5.67e-02	-6.27e-03	-2.11	3.68	-3.68	7.70e-03	-1.61e-03	-3.68
1	17	90	1.66	-2.69	-1.04	1.26e-02	-2.11	3.54	-3.80	-0.22	-3.91e-02	-3.67
1	17	91	1.26	-3.45	-2.15	-3.99e-02	-2.11	3.35	-3.92	-0.48	-8.49e-02	-3.63
1	17	92	1.06	-4.28	-3.23	6.67e-03	-2.13	3.12	-4.02	-0.77	-0.13	-3.55
1	17	93	1.10	-4.86	-3.87	0.12	-2.21	2.72	-4.12	-1.12	-0.28	-3.39

1	17	94	1.12	-5.35	-4.85	0.62	-1.74	1.32	-5.58	-3.55	-0.70	-3.14
1	17	95	1.24	-1.21	-3.67e-02	6.78e-02	-1.22	2.90	-3.20	-0.22	-8.33e-02	-3.05
1	17	96	5.99	-9.83e-02	5.49	0.40	-1.66	5.16	-1.48	3.13	0.55	-3.06
1	17	97	6.81	-0.27	6.19	0.36	-2.01	3.77	-2.93	0.73	0.10	-3.34
1	17	98	7.78	-0.10	7.28	0.40	-1.92	3.68	-3.29	0.40	-2.11e-02	-3.48
1	17	99	8.58	1.14e-02	8.13	0.46	-1.90	3.52	-3.57	7.20e-02	-0.12	-3.55
1	17	100	9.33	0.10	8.93	0.50	-1.88	3.37	-3.77	-0.22	-0.17	-3.57
1	17	101	2.00	-1.82	-0.37	0.55	-1.85	3.24	-3.88	-0.42	-0.22	-3.56
1	17	102	0.89	-10.65	-10.35	0.59	-1.83	3.07	-3.99	-0.66	-0.27	-3.52
1	17	103	0.93	-11.24	-10.96	0.65	-1.82	2.83	-4.10	-0.95	-0.32	-3.45
1	17	104	1.01	-11.71	-11.44	0.74	-1.83	2.53	-4.19	-1.28	-0.38	-3.33
1	17	105	1.33	-11.39	-11.07	1.02	-1.98	2.05	-4.29	-1.70	-0.53	-3.12
1	17	106	0.53	-11.63	-11.39	0.28	-1.71	0.73	-5.77	-4.10	-0.95	-2.84
1	17	107	1.01	-1.81	-1.13	0.33	-1.20	1.84	-3.35	-1.13	-0.38	-2.57
1	17	108	9.59	-0.39	9.31	-0.12	-1.64	3.51	-1.51	1.85	0.14	-2.36
1	17	109	9.60	0.34	9.05	0.89	-2.18	2.07	-2.96	-0.57	-0.32	-2.51
1	17	110	9.71	0.30	9.12	0.88	-2.27	1.66	-3.31	-1.10	-0.55	-2.47
1	17	111	9.13	0.21	8.40	0.94	-2.44	1.28	-3.53	-1.61	-0.65	-2.35
1	17	112	8.38	0.17	7.47	1.08	-2.58	0.87	-3.70	-2.10	-0.74	-2.18
1	17	113	7.45	-8.01e-02	6.41	0.97	-2.60	0.49	-3.83	-2.54	-0.81	-1.98
1	17	114	6.06	-2.37	5.27	-1.58	-2.46	0.15	-3.89	-2.89	-0.86	-1.75
1	17	115	4.78	-2.54	4.11	-1.87	-2.11	-0.25	-3.83	-3.13	-0.96	-1.42
1	17	116	0.99	-1.99	0.31	-1.31	-1.25	-0.80	-5.09	-4.69	-1.20	-1.25
1	17	117	-0.87	-1.83	-0.99	-1.71	-0.31	-0.58	-2.00	-1.83	-0.76	-0.47
1	17	118	1.32	1.24	1.24	1.32	-1.04e-02	2.55	5.35e-02	2.51	8.66e-02	0.29
1	17	119	-0.97	-3.98	-1.09	-3.85	-0.60	2.51	1.23	1.46	2.28	-0.49
1	17	120	4.90	-1.73	-1.42	4.59	-1.40	1.76	1.36	1.37	1.75	-5.59e-02
1	17	121	3.40	-3.75	-2.23	1.88	-2.92	3.28	1.00	2.29	1.99	-1.13
1	17	122	5.59	-5.17	-3.35	3.78	-4.02	4.17	0.78	2.96	1.98	-1.62
1	17	123	5.21	-6.59	-4.42	3.05	-4.57	4.27	0.33	2.72	1.89	-1.92
1	17	124	1.05	-8.86	-5.39	-2.43	-4.73	4.26	-0.13	2.36	1.77	-2.17
1	17	125	1.01	-9.19	-6.21	-1.98	-4.64	4.20	-0.62	1.96	1.62	-2.40
1	17	126	0.83	-9.40	-6.86	-1.70	-4.42	4.10	-1.12	1.52	1.46	-2.61
1	17	127	0.60	-9.49	-7.35	-1.55	-4.13	3.93	-1.62	1.05	1.26	-2.77
1	17	128	0.17	-9.70	-7.94	-1.58	-3.78	3.62	-2.09	0.49	1.04	-2.84
1	17	129	2.20	-5.80	-4.09	0.49	-3.28	3.64	-1.95	0.73	0.96	-2.79
1	17	130	0.12	-8.48	-7.24	-1.12	-3.02	2.89	-1.19	0.95	0.74	-2.03
1	17	131	-0.47	-9.81	-8.55	-1.73	-3.19	4.18	-2.00	1.29	0.90	-3.08
1	17	132	-0.27	-10.41	-9.13	-1.55	-3.37	4.72	-2.23	1.60	0.89	-3.46
1	17	133	0.12	-10.05	-8.72	-1.21	-3.43	4.63	-2.70	1.16	0.77	-3.66
1	17	134	0.31	-9.83	-8.46	-1.06	-3.46	4.54	-3.01	0.86	0.67	-3.77
1	17	135	0.48	-9.51	-8.07	-0.96	-3.51	4.46	-3.23	0.64	0.59	-3.85
1	17	136	0.66	-9.13	-7.58	-0.88	-3.57	4.37	-3.41	0.43	0.52	-3.89
1	17	137	0.87	-8.71	-7.03	-0.81	-3.64	4.24	-3.56	0.24	0.44	-3.90
1	17	138	1.10	-8.25	-6.43	-0.73	-3.71	4.08	-3.69	2.02e-02	0.37	-3.88
1	17	139	1.38	-7.76	-5.76	-0.62	-3.78	3.83	-3.85	-0.25	0.23	-3.83
1	17	140	1.67	-7.37	-5.17	-0.53	-3.88	3.47	-3.98	-0.65	0.15	-3.70
1	17	141	3.31	-4.09	-1.01	0.23	-3.65	3.38	-3.52	-0.22	7.88e-02	-3.45
1	17	142	2.84	-3.99	-0.68	-0.47	-3.41	2.67	-2.29	0.18	0.20	-2.48
1	17	143	1.25	-6.74	-4.23	-1.26	-3.71	3.92	-3.03	0.62	0.27	-3.47
1	17	144	2.22	-6.32	-3.45	-0.65	-4.03	4.46	-3.08	1.08	0.31	-3.75
1	17	145	2.85	-5.71	-2.53	-0.33	-4.13	4.34	-3.47	0.67	0.20	-3.90
1	17	146	3.26	-5.16	-1.72	-0.18	-4.14	4.23	-3.70	0.41	0.12	-3.96
1	17	147	3.66	-4.65	-0.89	-0.10	-4.14	4.13	-3.87	0.20	5.82e-02	-4.00
1	17	148	4.32	-3.97	0.44	-8.81e-02	-4.14	4.02	-4.01	7.73e-03	-4.12e-03	-4.01
1	17	149	4.62	-3.69	0.81	0.12	-4.14	3.87	-4.13	-0.19	-6.65e-02	-4.00
1	17	150	5.13	-3.28	1.65	0.20	-4.14	3.70	-4.23	-0.40	-0.13	-3.96
1	17	151	5.68	-2.86	2.46	0.35	-4.14	3.47	-4.34	-0.66	-0.21	-3.89
1	17	152	6.29	-2.24	3.39	0.66	-4.04	3.07	-4.46	-1.08	-0.31	-3.75
1	17	153	6.71	-1.26	4.19	1.27	-3.71	3.02	-3.92	-0.62	-0.28	-3.47
1	17	154	4.00	-2.84	0.68	0.47	-3.42	2.28	-2.67	-0.19	-0.21	-2.48
1	17	155	4.10	-3.32	1.01	-0.23	-3.66	3.51	-3.39	0.21	-8.18e-02	-3.45
1	17	156	7.35	-1.69	5.14	0.53	-3.89	3.97	-3.47	0.65	-0.16	-3.70
1	17	157	7.74	-1.39	5.73	0.63	-3.79	3.84	-3.83	0.25	-0.23	-3.83
1	17	158	8.24	-1.10	6.40	0.73	-3.71	3.68	-4.08	-2.01e-02	-0.38	-3.88
1	17	159	8.70	-0.87	7.01	0.81	-3.64	3.55	-4.24	-0.24	-0.45	-3.90
1	17	160	9.12	-0.66	7.57	0.89	-3.57	3.41	-4.37	-0.43	-0.53	-3.89
1	17	161	9.50	-0.48	8.05	0.97	-3.51	3.23	-4.46	-0.64	-0.60	-3.85
1	17	162	9.82	-0.31	8.45	1.06	-3.47	3.00	-4.55	-0.86	-0.68	-3.77
1	17	163	10.04	-0.12	8.71	1.21	-3.43	2.70	-4.63	-1.16	-0.78	-3.66
1	17	164	10.40	0.27	9.12	1.56	-3.37	2.22	-4.73	-1.61	-0.90	-3.46
1	17	165	9.81	0.47	8.54	1.74	-3.20	1.99	-4.19	-1.29	-0.91	-3.09
1	17	166	8.48	-0.12	7.24	1.13	-3.03	1.18	-2.89	-0.96	-0.75	-2.04
1	17	167	5.80	-2.20	4.08	-0.49	-3.29	1.94	-3.65	-0.74	-0.97	-2.79
1	17	168	9.70	-0.17	7.93	1.59	-3.78	2.09	-3.62	-0.49	-1.05	-2.84
1	17	169	9.49	-0.60	7.34	1.55	-4.13	1.61	-3.94	-1.05	-1.27	-2.77
1	17	170	9.40	-0.83	6.86	1.71	-4.42	1.11	-4.10	-1.52	-1.47	-2.61
1	17	171	9.20	-1.01	6.20	1.99	-4.65	0.61	-4.20	-1.96	-1.63	-2.40
1	17	172	8.87	-1.05	5.39	2.43	-4.73	0.12	-4.26	-2.36	-1.78	-2.17

1	17	173	6.59	-5.22	4.42	-3.05	-4.57	-0.34	-4.27	-2.71	-1.89	-1.92
1	17	174	5.16	-5.59	3.35	-3.78	-4.03	-0.78	-4.17	-2.96	-1.99	-1.63
1	17	175	3.75	-3.40	2.23	-1.88	-2.92	-1.00	-3.29	-2.29	-2.00	-1.13
1	17	176	1.73	-4.90	1.42	-4.59	-1.40	-1.36	-1.77	-1.36	-1.76	-5.85e-02
1	17	177	3.98	0.97	1.10	3.85	-0.60	-1.23	-2.52	-1.46	-2.29	-0.49
1	17	178	2.95	-1.56	-0.90	2.30	-1.59	4.22	0.42	0.52	4.12	-0.62
1	17	179	9.05	-2.02	-1.19	8.23	-2.91	4.20	0.86	1.23	3.83	-1.05
1	17	180	9.41	-4.23	-2.11	7.30	-4.94	4.29	1.38	2.25	3.42	-1.33
1	17	181	8.74	-6.10	-3.03	5.67	-6.01	4.61	1.23	2.63	3.20	-1.67
1	17	182	7.92	-7.46	-3.92	4.38	-6.47	4.82	0.82	2.57	3.08	-1.98
1	17	183	2.56	-10.56	-4.66	-3.34	-6.53	4.79	0.29	2.24	2.84	-2.23
1	17	184	2.53	-10.43	-5.25	-2.65	-6.35	4.75	-0.29	1.84	2.62	-2.49
1	17	185	2.36	-10.26	-5.68	-2.22	-6.07	4.61	-0.84	1.42	2.35	-2.69
1	17	186	2.11	-10.08	-5.99	-1.97	-5.76	4.48	-1.34	1.02	2.12	-2.86
1	17	187	1.94	-9.86	-6.19	-1.72	-5.46	4.31	-1.63	0.76	1.92	-2.91
1	17	188	2.06	-9.62	-6.34	-1.22	-5.25	4.07	-1.71	0.66	1.70	-2.84
1	17	189	1.71	-9.79	-6.59	-1.49	-5.15	4.16	-1.77	0.90	1.49	-2.95
1	17	190	1.86	-9.61	-6.52	-1.23	-5.09	4.32	-1.84	1.18	1.30	-3.08
1	17	191	1.56	-9.75	-6.60	-1.60	-5.07	4.59	-2.25	1.16	1.18	-3.42
1	17	192	1.65	-9.73	-6.56	-1.52	-5.10	4.73	-2.55	1.03	1.15	-3.64
1	17	193	1.83	-9.63	-6.41	-1.39	-5.15	4.68	-2.83	0.81	1.05	-3.75
1	17	194	2.05	-9.49	-6.16	-1.29	-5.23	4.64	-3.04	0.62	0.98	-3.84
1	17	195	2.30	-9.31	-5.83	-1.19	-5.32	4.54	-3.20	0.46	0.89	-3.86
1	17	196	2.58	-9.11	-5.43	-1.09	-5.43	4.45	-3.34	0.30	0.81	-3.89
1	17	197	2.90	-8.87	-4.99	-0.98	-5.54	4.29	-3.44	0.13	0.73	-3.85
1	17	198	3.26	-8.63	-4.52	-0.85	-5.66	4.11	-3.53	-7.71e-02	0.65	-3.80
1	17	199	3.67	-8.33	-4.03	-0.63	-5.76	3.90	-3.46	-0.19	0.62	-3.66
1	17	200	3.99	-8.04	-3.63	-0.42	-5.80	3.61	-3.24	-0.17	0.53	-3.41
1	17	201	4.14	-7.91	-3.22	-0.54	-5.88	3.70	-3.07	0.22	0.42	-3.38
1	17	202	4.49	-7.63	-2.67	-0.46	-5.96	3.88	-2.96	0.61	0.30	-3.42
1	17	203	4.63	-7.52	-2.30	-0.58	-6.02	4.13	-3.26	0.64	0.22	-3.69
1	17	204	5.03	-7.22	-1.80	-0.39	-6.08	4.24	-3.48	0.54	0.21	-3.86
1	17	205	5.39	-6.86	-1.24	-0.22	-6.10	4.17	-3.69	0.34	0.14	-3.93
1	17	206	5.74	-6.49	-0.64	-0.10	-6.11	4.08	-3.88	0.17	3.82e-02	-3.98
1	17	207	6.11	-6.11	-2.17e-02	1.78e-02	-6.11	3.98	-3.98	8.15e-03	-5.70e-03	-3.98
1	17	208	6.48	-5.75	0.60	0.13	-6.11	3.88	-4.07	-0.15	-4.45e-02	-3.98
1	17	209	6.85	-5.39	1.20	0.26	-6.11	3.68	-4.17	-0.33	-0.15	-3.92
1	17	210	7.21	-5.04	1.76	0.42	-6.09	3.47	-4.24	-0.54	-0.23	-3.85
1	17	211	7.51	-4.64	2.27	0.60	-6.02	3.25	-4.13	-0.65	-0.24	-3.69
1	17	212	7.62	-4.50	2.64	0.48	-5.96	3.05	-3.80	-0.62	-0.14	-3.42
1	17	213	7.90	-4.15	3.20	0.55	-5.88	3.06	-3.71	-0.23	-0.43	-3.38
1	17	214	8.03	-4.00	3.61	0.42	-5.80	3.23	-3.62	0.16	-0.55	-3.41
1	17	215	8.32	-3.68	4.01	0.63	-5.76	3.45	-3.91	0.18	-0.64	-3.66
1	17	216	8.63	-3.27	4.50	0.86	-5.66	3.52	-4.12	7.51e-02	-0.67	-3.80
1	17	217	8.87	-2.91	4.97	0.99	-5.54	3.43	-4.30	-0.13	-0.74	-3.85
1	17	218	9.10	-2.59	5.41	1.10	-5.43	3.33	-4.46	-0.30	-0.83	-3.89
1	17	219	9.31	-2.30	5.81	1.20	-5.33	3.19	-4.55	-0.46	-0.90	-3.86
1	17	220	9.49	-2.05	6.14	1.29	-5.23	3.03	-4.65	-0.62	-0.99	-3.84
1	17	221	9.63	-1.84	6.39	1.40	-5.16	2.82	-4.70	-0.81	-1.07	-3.75
1	17	222	9.73	-1.65	6.55	1.53	-5.10	2.54	-4.74	-1.03	-1.17	-3.64
1	17	223	9.75	-1.56	6.59	1.60	-5.07	2.24	-4.60	-1.17	-1.20	-3.42
1	17	224	9.61	-1.86	6.51	1.24	-5.10	1.83	-4.34	-1.19	-1.32	-3.08
1	17	225	9.79	-1.71	6.58	1.50	-5.15	1.75	-4.17	-0.91	-1.51	-2.95
1	17	226	9.62	-2.06	6.33	1.22	-5.25	1.70	-4.08	-0.66	-1.72	-2.84
1	17	227	9.86	-1.94	6.18	1.73	-5.46	1.62	-4.32	-0.76	-1.94	-2.91
1	17	228	10.08	-2.12	5.98	1.98	-5.76	1.33	-4.49	-1.03	-2.14	-2.85
1	17	229	10.26	-2.36	5.67	2.23	-6.07	0.83	-4.63	-1.43	-2.37	-2.69
1	17	230	10.43	-2.53	5.24	2.66	-6.35	0.28	-4.76	-1.84	-2.64	-2.49
1	17	231	10.56	-2.57	4.65	3.34	-6.53	-0.30	-4.80	-2.24	-2.86	-2.23
1	17	232	7.45	-7.93	3.91	-4.39	-6.48	-0.83	-4.84	-2.57	-3.09	-1.99
1	17	233	6.10	-8.75	3.02	-5.67	-6.02	-1.23	-4.62	-2.64	-3.21	-1.67
1	17	234	4.22	-9.42	2.11	-7.30	-4.94	-1.38	-4.30	-2.25	-3.43	-1.34
1	17	235	2.02	-9.05	1.19	-8.23	-2.91	-0.86	-4.21	-1.23	-3.84	-1.05
1	17	236	1.56	-2.95	0.90	-2.30	-1.59	-0.42	-4.24	-0.52	-4.14	-0.62
1	17	237	11.89	-1.43	-1.15	11.61	-1.91	6.60	0.48	0.95	6.13	-1.63
1	17	238	15.22	-2.47	-1.37	14.12	-4.26	6.25	0.84	1.44	5.66	-1.69
1	17	239	12.28	-5.45	-2.11	8.94	-6.93	6.02	1.42	2.29	5.15	-1.79
1	17	240	12.16	-7.00	-2.98	8.13	-7.81	5.88	1.29	2.54	4.63	-2.04
1	17	241	9.92	-8.52	-3.55	4.94	-8.18	5.73	0.97	2.42	4.29	-2.19
1	17	242	5.09	-11.13	-4.19	-1.86	-8.03	5.65	0.30	2.07	3.88	-2.52
1	17	243	4.20	-11.49	-4.47	-2.82	-7.80	5.46	-0.25	1.68	3.53	-2.70
1	17	244	3.69	-11.36	-4.81	-2.86	-7.46	5.35	-0.87	1.32	3.16	-2.97
1	17	245	3.87	-10.82	-4.92	-2.03	-7.20	5.13	-1.22	1.04	2.87	-3.04
1	17	246	3.45	-10.79	-5.13	-2.21	-6.97	4.98	-1.55	0.84	2.58	-3.15
1	17	247	3.71	-10.42	-5.18	-1.53	-6.83	4.79	-1.61	0.82	2.36	-3.11
1	17	248	3.36	-10.50	-5.26	-1.88	-6.72	4.75	-1.85	0.86	2.05	-3.24
1	17	249	3.60	-10.33	-5.20	-1.53	-6.72	4.66	-2.00	0.89	1.77	-3.30
1	17	250	3.42	-10.44	-5.16	-1.86	-6.73	4.84	-2.32	0.91	1.60	-3.56
1	17	251	3.69	-10.31	-5.03	-1.60	-6.79	4.44	-2.94	0.84	0.66	-3.69

1	17	252	3.72	-10.40	-4.92	-1.75	-6.88	4.96	-2.81	0.73	1.42	-3.87
1	17	253	4.11	-10.25	-4.72	-1.41	-6.99	4.88	-2.92	0.61	1.36	-3.88
1	17	254	4.23	-10.31	-4.52	-1.56	-7.12	4.88	-3.12	0.49	1.27	-3.98
1	17	255	4.70	-10.12	-4.22	-1.20	-7.25	4.74	-3.16	0.38	1.21	-3.93
1	17	256	4.87	-10.14	-3.94	-1.33	-7.40	4.68	-3.29	0.26	1.12	-3.96
1	17	257	5.39	-9.91	-3.59	-0.92	-7.53	4.47	-3.24	0.17	1.06	-3.83
1	17	258	5.61	-9.88	-3.30	-0.97	-7.65	4.29	-3.29	4.69e-02	0.96	-3.76
1	17	259	6.09	-9.53	-2.92	-0.53	-7.72	4.09	-3.10	0.13	0.86	-3.58
1	17	260	6.20	-9.43	-2.54	-0.68	-7.76	4.06	-3.16	0.26	0.64	-3.61
1	17	261	6.54	-9.24	-2.13	-0.58	-7.85	3.70	-3.49	0.35	-0.14	-3.59
1	17	262	6.84	-9.10	-1.71	-0.55	-7.95	3.92	-3.69	0.41	-0.18	-3.80
1	17	263	7.18	-8.89	-1.31	-0.40	-8.02	4.00	-3.77	0.35	-0.13	-3.88
1	17	264	7.49	-8.64	-0.90	-0.25	-8.06	4.13	-3.95	0.25	-7.23e-02	-4.03
1	17	265	7.79	-8.37	-0.47	-0.11	-8.08	4.08	-3.96	0.13	-7.09e-03	-4.01
1	17	266	8.05	-8.12	-9.31e-03	-6.31e-02	-8.08	4.09	-4.09	9.05e-03	-9.32e-03	-4.09
1	17	267	8.34	-7.81	0.45	7.83e-02	-8.08	3.98	-4.05	-0.11	4.67e-02	-4.01
1	17	268	8.66	-7.48	0.88	0.30	-8.06	3.95	-4.11	-0.24	8.15e-02	-4.03
1	17	269	8.90	-7.17	1.30	0.43	-8.02	3.83	-3.94	-0.35	0.24	-3.87
1	17	270	9.11	-6.83	1.70	0.58	-7.95	3.69	-3.92	-0.42	0.20	-3.79
1	17	271	9.24	-6.53	2.11	0.59	-7.85	3.48	-3.71	-0.37	0.14	-3.59
1	17	272	9.43	-6.20	2.53	0.70	-7.76	3.15	-4.09	-0.28	-0.66	-3.61
1	17	273	9.53	-6.09	2.90	0.53	-7.72	3.09	-4.11	-0.14	-0.89	-3.58
1	17	274	9.88	-5.61	3.29	0.98	-7.66	3.28	-4.31	-4.84e-02	-0.99	-3.76
1	17	275	9.90	-5.40	3.57	0.93	-7.54	3.23	-4.49	-0.17	-1.09	-3.83
1	17	276	10.14	-4.88	3.92	1.34	-7.40	3.28	-4.70	-0.27	-1.15	-3.96
1	17	277	10.12	-4.71	4.20	1.21	-7.26	3.14	-4.76	-0.38	-1.24	-3.93
1	17	278	10.31	-4.23	4.50	1.57	-7.12	3.10	-4.90	-0.49	-1.30	-3.98
1	17	279	10.24	-4.12	4.70	1.42	-6.99	2.90	-4.90	-0.61	-1.39	-3.88
1	17	280	10.39	-3.72	4.91	1.77	-6.88	2.80	-4.98	-0.74	-1.45	-3.87
1	17	281	10.31	-3.70	5.01	1.60	-6.79	2.93	-4.45	-0.85	-0.67	-3.69
1	17	282	10.44	-3.42	5.14	1.87	-6.73	2.30	-4.86	-0.92	-1.63	-3.56
1	17	283	10.32	-3.60	5.18	1.54	-6.72	1.98	-4.68	-0.90	-1.80	-3.30
1	17	284	10.50	-3.37	5.25	1.89	-6.73	1.83	-4.77	-0.86	-2.07	-3.24
1	17	285	10.41	-3.72	5.16	1.54	-6.83	1.60	-4.81	-0.83	-2.39	-3.11
1	17	286	10.79	-3.46	5.12	2.22	-6.97	1.54	-5.00	-0.85	-2.61	-3.15
1	17	287	10.81	-3.87	4.90	2.04	-7.20	1.21	-5.15	-1.04	-2.90	-3.04
1	17	288	11.36	-3.70	4.79	2.87	-7.47	0.86	-5.37	-1.32	-3.19	-2.97
1	17	289	11.48	-4.21	4.45	2.82	-7.80	0.24	-5.48	-1.69	-3.56	-2.70
1	17	290	11.13	-5.10	4.17	1.86	-8.03	-0.31	-5.68	-2.08	-3.91	-2.52
1	17	291	8.51	-9.93	3.53	-4.95	-8.19	-0.98	-5.76	-2.42	-4.32	-2.19
1	17	292	7.00	-12.17	2.96	-8.14	-7.81	-1.30	-5.90	-2.54	-4.66	-2.04
1	17	293	5.45	-12.29	2.10	-8.94	-6.94	-1.43	-6.04	-2.29	-5.18	-1.80
1	17	294	2.46	-15.23	1.37	-14.13	-4.27	-0.85	-6.28	-1.44	-5.69	-1.69
1	17	295	1.43	-11.88	1.15	-11.60	-1.91	-0.48	-6.63	-0.95	-6.16	-1.63
1	17	296	15.84	-1.56	-1.29	15.56	-2.16	7.38	0.75	1.31	6.82	-1.84
1	17	297	19.19	-3.13	-1.45	17.51	-5.89	8.62	1.08	2.20	7.50	-2.68
1	17	298	13.68	-6.73	-1.88	8.83	-8.69	7.21	1.44	2.43	6.23	-2.17
1	17	299	15.72	-7.47	-3.24	11.49	-8.95	7.90	0.71	2.57	6.04	-3.15
1	17	300	10.51	-9.60	-3.10	4.01	-9.40	6.32	0.95	2.27	5.00	-2.31
1	17	301	8.00	-10.71	-3.92	1.21	-9.00	7.17	-0.51	1.89	4.77	-3.56
1	17	302	5.81	-11.91	-3.80	-2.29	-8.83	5.73	-0.30	1.47	3.96	-2.75
1	17	303	4.29	-12.59	-4.24	-4.07	-8.44	6.68	-1.63	1.23	3.82	-3.95
1	17	304	5.36	-11.36	-4.18	-1.82	-8.27	5.32	-1.10	1.00	3.21	-3.01
1	17	305	4.28	-11.83	-4.42	-3.12	-8.03	6.26	-2.23	0.91	3.11	-4.10
1	17	306	5.41	-11.31	-4.39	-1.51	-8.23	4.74	-1.78	0.39	2.57	-3.07
1	17	307	5.21	-11.82	-4.49	-2.12	-8.43	4.36	-4.06	0.51	-0.22	-4.19
1	17	308	5.44	-11.31	-4.41	-1.45	-8.24	3.67	-2.86	0.86	-4.29e-02	-3.23
1	17	309	4.68	-11.54	-4.42	-2.44	-8.05	4.35	-4.68	0.75	-1.08	-4.42
1	17	310	5.41	-11.16	-4.29	-1.46	-8.17	3.48	-3.65	0.70	-0.86	-3.48
1	17	311	5.05	-11.64	-4.24	-2.35	-8.29	4.58	-4.87	0.67	-0.96	-4.66
1	17	312	5.87	-11.22	-4.05	-1.30	-8.44	3.53	-3.84	0.47	-0.79	-3.63
1	17	313	5.60	-11.68	-3.92	-2.17	-8.59	4.88	-4.65	0.40	-0.17	-4.76
1	17	314	6.47	-11.22	-3.67	-1.08	-8.75	4.21	-3.14	0.33	0.74	-3.67
1	17	315	6.25	-11.64	-3.47	-1.92	-8.91	5.69	-3.90	0.28	1.51	-4.75
1	17	316	7.14	-11.14	-3.19	-0.82	-9.06	4.41	-2.85	0.26	1.30	-3.60
1	17	317	7.01	-11.41	-2.92	-1.48	-9.18	5.41	-3.90	0.25	1.26	-4.63
1	17	318	7.93	-11.08	-2.59	-0.56	-9.45	3.75	-3.12	0.13	0.50	-3.43
1	17	319	8.19	-11.25	-2.27	-0.79	-9.69	4.72	-4.36	0.26	9.72e-02	-4.54
1	17	320	8.47	-10.81	-1.87	-0.47	-9.61	3.67	-3.25	0.36	7.04e-02	-3.46
1	17	321	8.47	-10.62	-1.53	-0.63	-9.53	4.59	-4.78	0.23	-0.42	-4.67
1	17	322	8.82	-10.40	-1.21	-0.36	-9.60	3.62	-3.69	0.21	-0.27	-3.65
1	17	323	9.04	-10.28	-0.92	-0.32	-9.65	4.83	-4.87	0.15	-0.19	-4.84
1	17	324	9.28	-10.07	-0.64	-0.14	-9.67	3.80	-3.70	8.62e-02	1.20e-02	-3.75
1	17	325	9.66	-9.71	-1.07e-02	-4.87e-02	-9.69	4.89	-4.90	9.89e-03	-1.28e-02	-4.90
1	17	326	10.01	-9.34	0.63	3.64e-02	-9.67	3.70	-3.80	-6.80e-02	-2.84e-02	-3.75
1	17	327	10.30	-9.01	0.92	0.37	-9.65	4.88	-4.81	-0.14	0.21	-4.84
1	17	328	10.40	-8.81	1.20	0.38	-9.60	3.69	-3.61	-0.21	0.29	-3.64
1	17	329	10.64	-8.45	1.52	0.67	-9.53	4.78	-4.58	-0.25	0.45	-4.67
1	17	330	10.80	-8.46	1.86	0.48	-9.61	3.24	-3.68	-0.37	-7.34e-02	-3.46

1	17	331	11.25	-8.18	2.27	0.81	-9.69	4.36	-4.73	-0.28	-1.00e-01	-4.54
1	17	332	11.07	-7.93	2.58	0.56	-9.45	3.11	-3.77	-0.14	-0.52	-3.44
1	17	333	11.42	-7.01	2.91	1.50	-9.19	3.88	-5.43	-0.26	-1.30	-4.63
1	17	334	11.14	-7.14	3.17	0.82	-9.06	2.84	-4.43	-0.26	-1.33	-3.60
1	17	335	11.65	-6.25	3.46	1.95	-8.92	3.88	-5.71	-0.29	-1.54	-4.75
1	17	336	11.22	-6.48	3.65	1.08	-8.76	3.13	-4.22	-0.34	-0.75	-3.67
1	17	337	11.69	-5.59	3.90	2.20	-8.60	4.65	-4.88	-0.41	0.18	-4.76
1	17	338	11.21	-5.89	4.03	1.30	-8.44	3.85	-3.52	-0.48	0.80	-3.63
1	17	339	11.64	-5.05	4.22	2.38	-8.29	4.88	-4.58	-0.68	0.98	-4.66
1	17	340	11.16	-5.42	4.27	1.46	-8.17	3.65	-3.48	-0.71	0.88	-3.48
1	17	341	11.55	-4.68	4.40	2.46	-8.05	4.69	-4.35	-0.76	1.10	-4.42
1	17	342	11.30	-5.45	4.39	1.46	-8.24	2.86	-3.68	-0.87	4.40e-02	-3.24
1	17	343	11.82	-5.21	4.47	2.13	-8.44	4.07	-4.36	-0.51	0.22	-4.20
1	17	344	11.30	-5.42	4.36	1.51	-8.24	1.77	-4.76	-0.39	-2.61	-3.07
1	17	345	11.83	-4.29	4.40	3.15	-8.04	2.21	-6.29	-0.92	-3.15	-4.10
1	17	346	11.34	-5.37	4.15	1.82	-8.28	1.09	-5.34	-1.01	-3.25	-3.01
1	17	347	12.59	-4.29	4.21	4.10	-8.44	1.61	-6.71	-1.24	-3.86	-3.95
1	17	348	11.89	-5.83	3.77	2.29	-8.83	0.28	-5.77	-1.48	-4.01	-2.75
1	17	349	10.70	-8.02	3.90	-1.22	-9.00	0.49	-7.20	-1.90	-4.82	-3.56
1	17	350	9.58	-10.52	3.06	-4.00	-9.41	-0.97	-6.35	-2.28	-5.04	-2.31
1	17	351	7.45	-15.75	3.22	-11.52	-8.96	-0.73	-7.94	-2.58	-6.08	-3.15
1	17	352	6.72	-13.68	1.86	-8.82	-8.69	-1.45	-7.25	-2.43	-6.27	-2.18
1	17	353	3.13	-19.19	1.45	-17.51	-5.89	-1.09	-8.66	-2.20	-7.55	-2.68
1	17	354	1.56	-15.83	1.28	-15.56	-2.16	-0.76	-7.42	-1.31	-6.86	-1.85
1	17	355	18.97	-1.78	-1.57	18.76	-2.07	6.48	0.39	0.88	5.99	-1.66
1	17	356	17.25	-1.79	0.35	15.10	-6.02	8.10	0.84	2.10	6.84	-2.75
1	17	357	13.70	-6.66	-2.00	9.04	-8.55	6.97	1.04	2.28	5.73	-2.41
1	17	358	13.78	-7.57	-3.25	9.46	-8.58	7.83	0.46	2.52	5.76	-3.31
1	17	359	10.03	-9.38	-3.18	3.83	-9.05	6.18	0.61	2.16	4.63	-2.50
1	17	360	6.95	-10.62	-3.88	0.21	-8.54	7.04	-0.79	1.80	4.45	-3.68
1	17	361	5.49	-11.56	-3.90	-2.18	-8.48	5.53	-0.70	1.22	3.60	-2.88
1	17	362	4.32	-12.00	-4.24	-3.45	-8.15	6.40	-2.13	0.75	3.53	-4.03
1	17	363	5.19	-11.28	-4.30	-1.79	-8.14	5.11	-1.46	0.75	2.90	-3.11
1	17	364	4.41	-11.69	-4.49	-2.79	-8.01	5.41	-3.01	0.66	1.74	-4.18
1	17	365	5.34	-11.61	-4.68	-1.58	-8.33	3.51	-2.83	0.54	0.15	-3.16
1	17	366	5.38	-12.15	-4.88	-1.89	-8.63	4.59	-3.80	0.63	0.16	-4.19
1	17	367	5.60	-11.85	-4.71	-1.54	-8.58	3.74	-2.91	0.69	0.14	-3.31
1	17	368	5.20	-12.00	-4.52	-2.28	-8.53	3.97	-5.28	0.60	-1.91	-4.45
1	17	369	5.89	-11.84	-4.44	-1.51	-8.75	3.15	-4.19	0.57	-1.61	-3.50
1	17	370	5.74	-12.31	-4.37	-2.20	-8.96	4.21	-5.36	0.54	-1.70	-4.65
1	17	371	6.50	-12.07	-4.21	-1.36	-9.17	3.94	-3.33	0.49	0.13	-3.63
1	17	372	6.41	-12.49	-4.07	-2.01	-9.39	5.04	-4.47	0.44	0.12	-4.75
1	17	373	7.19	-12.19	-3.85	-1.15	-9.60	3.92	-3.41	0.37	0.14	-3.67
1	17	374	7.13	-12.54	-3.66	-1.75	-9.79	4.99	-4.51	0.33	0.14	-4.75
1	17	375	7.90	-12.18	-3.40	-0.89	-9.96	3.82	-3.40	0.27	0.15	-3.61
1	17	376	7.89	-12.41	-3.16	-1.36	-10.11	4.85	-4.45	0.26	0.15	-4.65
1	17	377	8.54	-12.39	-3.17	-0.68	-10.40	3.64	-3.36	0.13	0.15	-3.50
1	17	378	8.98	-12.53	-3.17	-0.39	-10.67	4.72	-4.31	0.24	0.16	-4.51
1	17	379	9.08	-12.19	-2.52	-0.60	-10.59	3.76	-3.30	0.33	0.13	-3.53
1	17	380	9.42	-11.71	-1.96	-0.33	-10.53	4.86	-4.54	0.23	8.75e-02	-4.70
1	17	381	9.70	-11.56	-1.70	-0.16	-10.61	3.79	-3.55	0.19	5.15e-02	-3.67
1	17	382	10.48	-10.87	-0.21	-0.18	-10.67	4.92	-4.76	0.14	1.92e-02	-4.84
1	17	383	10.72	-10.69	-2.30e-02	5.31e-02	-10.70	3.80	-3.71	8.05e-02	5.44e-03	-3.76
1	17	384	10.69	-10.75	-1.15e-02	-5.42e-02	-10.72	4.89	-4.89	1.05e-02	-1.12e-02	-4.89
1	17	385	10.65	-10.76	9.17e-03	-0.11	-10.70	3.71	-3.80	-6.14e-02	-2.45e-02	-3.75
1	17	386	10.86	-10.49	0.19	0.18	-10.68	4.76	-4.92	-0.13	-3.79e-02	-4.84
1	17	387	11.43	-9.87	1.70	-0.14	-10.61	3.53	-3.79	-0.19	-6.87e-02	-3.66
1	17	388	11.72	-9.41	1.95	0.35	-10.53	4.53	-4.87	-0.24	-0.10	-4.70
1	17	389	12.20	-9.08	2.52	0.60	-10.60	3.28	-3.78	-0.35	-0.14	-3.53
1	17	390	12.54	-8.97	3.17	0.40	-10.67	4.30	-4.73	-0.26	-0.17	-4.52
1	17	391	12.39	-8.55	3.15	0.68	-10.40	3.35	-3.65	-0.14	-0.16	-3.50
1	17	392	12.41	-7.89	3.16	1.37	-10.11	4.45	-4.86	-0.26	-0.15	-4.65
1	17	393	12.18	-7.91	3.38	0.89	-9.97	3.40	-3.82	-0.27	-0.15	-3.61
1	17	394	12.55	-7.14	3.65	1.77	-9.80	4.51	-4.99	-0.34	-0.14	-4.75
1	17	395	12.18	-7.21	3.83	1.14	-9.60	3.41	-3.93	-0.37	-0.14	-3.67
1	17	396	12.49	-6.41	4.06	2.03	-9.40	4.46	-5.04	-0.45	-0.13	-4.75
1	17	397	12.06	-6.51	4.19	1.36	-9.18	3.32	-3.95	-0.50	-0.13	-3.63
1	17	398	12.31	-5.74	4.35	2.21	-8.96	5.38	-4.20	-0.55	1.73	-4.65
1	17	399	11.83	-5.91	4.42	1.50	-8.75	4.20	-3.14	-0.58	1.64	-3.50
1	17	400	12.00	-5.21	4.50	2.29	-8.53	5.30	-3.97	-0.61	1.94	-4.45
1	17	401	11.85	-5.62	4.69	1.54	-8.59	2.91	-3.75	-0.70	-0.14	-3.31
1	17	402	12.14	-5.39	4.86	1.90	-8.64	3.80	-4.60	-0.64	-0.16	-4.19
1	17	403	11.60	-5.35	4.66	1.59	-8.34	2.83	-3.52	-0.54	-0.15	-3.16
1	17	404	11.69	-4.42	4.46	2.81	-8.01	2.99	-5.43	-0.67	-1.76	-4.18
1	17	405	11.27	-5.21	4.27	1.79	-8.14	1.44	-5.14	-0.76	-2.94	-3.11
1	17	406	12.00	-4.32	4.21	3.47	-8.15	2.11	-6.43	-0.75	-3.57	-4.03
1	17	407	11.55	-5.51	3.87	2.17	-8.49	0.68	-5.55	-1.23	-3.64	-2.88
1	17	408	10.61	-6.97	3.85	-0.21	-8.55	0.77	-7.08	-1.81	-4.50	-3.69
1	17	409	9.37	-10.03	3.15	-3.81	-9.05	-0.62	-6.22	-2.17	-4.67	-2.50

1	17	410	7.56	-13.80	3.23	-9.46	-8.59	-0.48	-7.86	-2.53	-5.81	-3.31
1	17	411	6.65	-13.70	1.97	-9.03	-8.56	-1.05	-7.01	-2.28	-5.77	-2.41
1	17	412	1.81	-17.24	-0.35	-15.09	-6.03	-0.85	-8.14	-2.11	-6.89	-2.75
1	17	413	1.77	-18.96	1.56	-18.75	-2.08	-0.39	-6.52	-0.88	-6.03	-1.66
1	17	414	20.06	-1.09	-1.09	20.06	-4.79e-03	4.12	-1.28	-0.53	3.37	-1.87
1	17	415	13.24	-0.71	0.32	12.22	-3.64	4.90	-0.52	0.91	3.48	-2.38
1	17	416	11.66	-5.41	-2.58	8.82	-6.35	5.62	-0.48	1.60	3.53	-2.90
1	17	417	8.12	-7.19	-3.76	4.69	-6.39	5.70	-0.42	1.95	3.33	-2.98
1	17	418	7.84	-7.91	-3.92	3.85	-6.85	5.54	-0.95	1.61	2.98	-3.17
1	17	419	5.05	-9.05	-4.22	0.22	-6.69	5.13	-1.60	0.98	2.56	-3.27
1	17	420	3.76	-10.42	-4.58	-2.08	-6.98	4.72	-2.18	0.86	1.68	-3.43
1	17	421	3.85	-10.63	-4.67	-2.12	-7.13	4.62	-2.40	0.67	1.55	-3.48
1	17	422	4.30	-11.05	-5.00	-1.74	-7.50	4.55	-2.62	0.57	1.36	-3.57
1	17	423	4.43	-11.48	-5.04	-2.00	-7.81	3.93	-3.23	0.51	0.18	-3.57
1	17	424	4.99	-11.78	-5.19	-1.60	-8.19	3.95	-3.29	0.48	0.18	-3.62
1	17	425	5.22	-12.15	-5.10	-1.82	-8.53	3.90	-3.30	0.44	0.16	-3.60
1	17	426	5.70	-12.61	-5.39	-1.52	-8.95	3.98	-3.42	0.41	0.15	-3.70
1	17	427	6.01	-13.08	-5.36	-1.72	-9.37	3.63	-3.93	0.43	-0.73	-3.74
1	17	428	6.54	-13.37	-5.36	-1.47	-9.76	3.73	-3.97	0.41	-0.65	-3.81
1	17	429	6.87	-13.74	-5.27	-1.60	-10.14	3.75	-4.00	0.40	-0.64	-3.84
1	17	430	7.43	-13.90	-5.14	-1.34	-10.49	4.16	-3.63	0.36	0.16	-3.90
1	17	431	7.75	-14.19	-5.02	-1.42	-10.82	4.16	-3.66	0.33	0.16	-3.91
1	17	432	8.28	-14.23	-4.79	-1.16	-11.11	4.17	-3.70	0.29	0.18	-3.94
1	17	433	8.56	-14.44	-4.66	-1.21	-11.37	4.15	-3.70	0.26	0.18	-3.92
1	17	434	9.04	-14.36	-4.36	-0.97	-11.58	4.15	-3.71	0.24	0.19	-3.93
1	17	435	9.52	-14.30	-4.24	-0.54	-11.76	4.10	-3.69	0.22	0.19	-3.90
1	17	436	9.94	-14.09	-3.78	-0.37	-11.89	4.10	-3.70	0.21	0.18	-3.90
1	17	437	10.40	-13.90	-3.46	-4.17e-02	-12.03	4.01	-3.68	0.18	0.15	-3.84
1	17	438	10.43	-14.07	-3.37	-0.27	-12.15	4.05	-3.79	0.14	0.12	-3.92
1	17	439	11.84	-12.80	-1.04	8.57e-02	-12.31	4.04	-3.83	0.14	6.80e-02	-3.94
1	17	440	12.11	-12.73	-0.74	0.11	-12.41	4.07	-3.92	0.11	3.14e-02	-4.00
1	17	441	12.26	-12.77	-0.58	6.27e-02	-12.51	4.06	-3.96	9.20e-02	7.49e-03	-4.01
1	17	442	12.43	-12.69	-0.28	1.90e-02	-12.56	4.07	-4.01	5.46e-02	-7.96e-04	-4.04
1	17	443	12.56	-12.62	-2.34e-02	-4.31e-02	-12.59	4.04	-4.03	1.24e-02	-3.39e-03	-4.03
1	17	444	12.64	-12.50	0.23	-9.34e-02	-12.57	4.02	-4.06	-3.21e-02	-7.24e-03	-4.04
1	17	445	12.73	-12.32	0.53	-0.12	-12.52	3.96	-4.05	-7.48e-02	-1.74e-02	-4.01
1	17	446	12.71	-12.16	0.69	-0.14	-12.43	3.92	-4.07	-0.11	-4.68e-02	-4.00
1	17	447	12.79	-11.88	1.00	-7.94e-02	-12.32	3.82	-4.06	-0.16	-8.54e-02	-3.94
1	17	448	14.09	-10.44	3.37	0.28	-12.17	3.78	-4.07	-0.16	-0.13	-3.92
1	17	449	13.93	-10.39	3.46	7.21e-02	-12.04	3.67	-4.02	-0.19	-0.16	-3.84
1	17	450	14.10	-9.94	3.77	0.38	-11.90	3.69	-4.11	-0.22	-0.19	-3.90
1	17	451	14.31	-9.52	4.24	0.55	-11.77	3.69	-4.11	-0.22	-0.19	-3.90
1	17	452	14.36	-9.05	4.35	0.97	-11.58	3.71	-4.15	-0.24	-0.20	-3.93
1	17	453	14.44	-8.57	4.66	1.22	-11.38	3.70	-4.15	-0.27	-0.19	-3.92
1	17	454	14.23	-8.30	4.78	1.16	-11.12	3.70	-4.18	-0.30	-0.18	-3.94
1	17	455	14.19	-7.76	5.01	1.42	-10.83	3.66	-4.16	-0.34	-0.17	-3.91
1	17	456	13.90	-7.44	5.12	1.34	-10.50	3.63	-4.17	-0.37	-0.17	-3.90
1	17	457	13.74	-6.88	5.26	1.60	-10.15	4.01	-3.75	-0.41	0.66	-3.84
1	17	458	13.36	-6.55	5.35	1.47	-9.76	3.97	-3.73	-0.42	0.66	-3.81
1	17	459	13.08	-6.02	5.34	1.72	-9.37	3.93	-3.64	-0.44	0.74	-3.74
1	17	460	12.61	-5.71	5.37	1.52	-8.95	3.41	-3.99	-0.42	-0.16	-3.70
1	17	461	12.14	-5.23	5.08	1.83	-8.53	3.30	-3.90	-0.44	-0.17	-3.60
1	17	462	11.77	-5.00	5.17	1.60	-8.19	3.29	-3.95	-0.48	-0.18	-3.62
1	17	463	11.47	-4.44	5.02	2.01	-7.81	3.23	-3.93	-0.52	-0.18	-3.57
1	17	464	11.04	-4.31	4.98	1.74	-7.50	2.61	-4.57	-0.58	-1.38	-3.57
1	17	465	10.61	-3.86	4.63	2.12	-7.13	2.39	-4.63	-0.68	-1.57	-3.48
1	17	466	10.40	-3.77	4.55	2.08	-6.98	1.92	-5.08	-0.86	-2.30	-3.43
1	17	467	9.03	-5.06	4.18	-0.21	-6.70	1.58	-5.15	-0.98	-2.58	-3.27
1	17	468	7.89	-7.84	3.88	-3.84	-6.85	0.94	-5.56	-1.61	-3.01	-3.17
1	17	469	7.17	-8.12	3.71	-4.66	-6.39	0.41	-5.72	-1.95	-3.36	-2.98
1	17	470	5.38	-11.66	2.52	-8.81	-6.36	0.47	-5.64	-1.61	-3.56	-2.90
1	17	471	0.73	-13.22	-0.30	-12.19	-3.65	0.51	-4.92	-0.91	-3.50	-2.39
1	17	472	1.10	-20.05	1.10	-20.05	-1.19e-02	1.28	-4.14	0.53	-3.40	-1.87
1	17	473	18.29	-1.19	-0.92	18.03	2.26	2.15	-2.31	-0.73	0.56	-2.14
1	17	474	10.98	-1.80	-1.66	10.84	-1.32	2.79	-1.84	0.20	0.75	-2.30
1	17	475	9.16	-3.77	-1.91	7.30	-4.54	3.90	-1.90	0.84	1.15	-2.90
1	17	476	6.24	-5.09	-2.62	3.78	-4.67	4.21	-1.85	1.24	1.12	-3.03
1	17	477	6.03	-6.33	-3.13	2.83	-5.41	4.49	-2.24	1.11	1.14	-3.36
1	17	478	3.72	-8.44	-3.60	-1.13	-5.95	4.22	-2.53	0.80	0.90	-3.37
1	17	479	3.99	-9.73	-4.11	-1.64	-6.75	4.22	-2.93	0.53	0.76	-3.57
1	17	480	4.30	-10.87	-4.54	-2.03	-7.48	3.77	-3.25	0.41	0.11	-3.50
1	17	481	5.17	-11.66	-4.94	-1.55	-8.24	3.89	-3.43	0.35	0.11	-3.66
1	17	482	5.45	-12.69	-5.30	-1.95	-8.92	3.79	-3.35	0.33	0.10	-3.56
1	17	483	6.23	-13.35	-5.66	-1.47	-9.56	3.92	-3.51	0.31	0.10	-3.71
1	17	484	6.58	-14.13	-5.82	-1.72	-10.15	3.80	-3.42	0.29	9.29e-02	-3.61
1	17	485	7.36	-14.54	-5.89	-1.29	-10.71	3.95	-3.58	0.28	8.08e-02	-3.76
1	17	486	7.72	-15.26	-6.01	-1.52	-11.27	3.85	-3.49	0.28	7.83e-02	-3.67
1	17	487	8.45	-15.58	-5.94	-1.19	-11.78	4.01	-3.65	0.28	7.64e-02	-3.83
1	17	488	8.87	-16.07	-5.82	-1.38	-12.27	3.91	-3.55	0.28	8.08e-02	-3.73

1	17	489	9.58	-16.23	-5.59	-1.06	-12.71	4.06	-3.72	0.26	8.47e-02	-3.89
1	17	490	9.99	-16.55	-5.36	-1.21	-13.10	3.94	-3.62	0.23	8.85e-02	-3.78
1	17	491	10.64	-16.56	-5.02	-0.89	-13.44	4.08	-3.78	0.21	9.41e-02	-3.93
1	17	492	11.00	-16.72	-4.70	-1.02	-13.74	3.95	-3.67	0.18	9.76e-02	-3.81
1	17	493	11.58	-16.58	-4.28	-0.71	-13.97	4.09	-3.81	0.18	0.10	-3.95
1	17	494	11.90	-16.63	-3.91	-0.82	-14.18	3.96	-3.69	0.17	0.10	-3.82
1	17	495	12.34	-16.47	-3.57	-0.57	-14.33	4.09	-3.84	0.15	9.58e-02	-3.96
1	17	496	12.83	-16.30	-3.10	-0.37	-14.50	3.94	-3.74	0.12	7.43e-02	-3.84
1	17	497	13.28	-16.09	-2.60	-0.21	-14.64	4.06	-3.91	0.10	4.67e-02	-3.98
1	17	498	13.75	-15.97	-2.21	-7.06e-03	-14.82	3.92	-3.81	8.66e-02	2.24e-02	-3.87
1	17	499	14.03	-15.88	-1.71	-0.13	-14.94	4.06	-3.98	7.72e-02	9.33e-03	-4.02
1	17	500	14.46	-15.68	-1.22	3.14e-03	-15.05	3.93	-3.86	7.05e-02	5.26e-03	-3.90
1	17	501	14.68	-15.57	-0.90	-3.31e-03	-15.12	4.06	-4.02	4.36e-02	1.80e-03	-4.04
1	17	502	15.12	-15.19	-3.76e-02	-3.67e-02	-15.15	3.92	-3.90	1.29e-02	2.45e-03	-3.91
1	17	503	15.31	-14.96	0.40	-5.21e-02	-15.13	4.03	-4.05	-1.98e-02	1.49e-03	-4.04
1	17	504	15.53	-14.64	0.93	-4.07e-02	-15.08	3.87	-3.93	-5.20e-02	-4.29e-03	-3.90
1	17	505	15.89	-14.09	1.66	0.14	-14.97	3.98	-4.07	-7.38e-02	-1.44e-02	-4.02
1	17	506	15.97	-13.79	2.17	1.51e-02	-14.84	3.80	-3.93	-9.78e-02	-3.17e-02	-3.87
1	17	507	16.10	-13.32	2.56	0.22	-14.66	3.90	-4.07	-0.12	-5.67e-02	-3.99
1	17	508	16.30	-12.85	3.07	0.39	-14.51	3.73	-3.95	-0.14	-8.20e-02	-3.84
1	17	509	16.47	-12.36	3.54	0.57	-14.34	3.84	-4.09	-0.15	-9.96e-02	-3.96
1	17	510	16.63	-11.91	3.89	0.83	-14.19	3.69	-3.96	-0.17	-0.10	-3.82
1	17	511	16.57	-11.59	4.27	0.72	-13.97	3.81	-4.09	-0.17	-0.10	-3.95
1	17	512	16.72	-11.00	4.69	1.03	-13.74	3.67	-3.95	-0.18	-9.99e-02	-3.81
1	17	513	16.56	-10.65	5.01	0.89	-13.45	3.78	-4.08	-0.21	-9.68e-02	-3.93
1	17	514	16.55	-9.99	5.35	1.21	-13.11	3.62	-3.95	-0.23	-9.14e-02	-3.78
1	17	515	16.23	-9.59	5.59	1.06	-12.71	3.72	-4.07	-0.26	-8.81e-02	-3.89
1	17	516	16.07	-8.88	5.81	1.38	-12.27	3.55	-3.92	-0.28	-8.44e-02	-3.73
1	17	517	15.58	-8.46	5.94	1.19	-11.78	3.65	-4.02	-0.29	-8.03e-02	-3.83
1	17	518	15.26	-7.73	6.01	1.53	-11.27	3.48	-3.86	-0.29	-8.20e-02	-3.67
1	17	519	14.54	-7.36	5.88	1.30	-10.71	3.58	-3.95	-0.29	-8.34e-02	-3.76
1	17	520	14.13	-6.58	5.81	1.73	-10.15	3.42	-3.80	-0.29	-9.49e-02	-3.61
1	17	521	13.35	-6.23	5.64	1.47	-9.56	3.51	-3.92	-0.31	-0.10	-3.71
1	17	522	12.69	-5.45	5.28	1.96	-8.92	3.35	-3.79	-0.33	-0.11	-3.56
1	17	523	11.65	-5.17	4.91	1.56	-8.24	3.43	-3.90	-0.36	-0.11	-3.66
1	17	524	10.85	-4.30	4.51	2.04	-7.48	3.25	-3.77	-0.41	-0.11	-3.50
1	17	525	9.71	-4.01	4.06	1.64	-6.75	2.93	-4.22	-0.53	-0.76	-3.57
1	17	526	8.82	-3.17	3.55	2.10	-5.95	2.52	-4.23	-0.80	-0.91	-3.37
1	17	527	6.28	-6.03	3.06	-2.81	-5.41	2.23	-4.50	-1.12	-1.15	-3.37
1	17	528	5.04	-6.24	2.55	-3.76	-4.67	1.84	-4.21	-1.24	-1.13	-3.03
1	17	529	3.71	-9.16	1.83	-7.29	-4.54	1.90	-3.90	-0.85	-1.16	-2.90
1	17	530	1.77	-10.96	1.63	-10.82	-1.32	1.84	-2.80	-0.20	-0.75	-2.30
1	17	531	1.19	-18.28	0.92	-18.02	2.26	2.31	-2.15	0.73	-0.57	-2.14
1	17	532	13.73	-1.64	-0.90	12.99	3.29	0.93	-2.82	-0.76	-1.13	-1.87
1	17	533	9.14	-1.48	-1.48	9.13	-0.27	1.72	-2.53	-0.15	-0.67	-2.11
1	17	534	7.34	-3.86	-2.06	5.54	-4.12	2.76	-2.75	0.30	-0.29	-2.74
1	17	535	6.06	-5.63	-2.98	3.41	-4.89	3.43	-2.57	0.72	0.14	-2.99
1	17	536	5.88	-7.67	-3.77	1.99	-6.13	3.81	-2.93	0.72	0.16	-3.36
1	17	537	5.18	-9.97	-4.48	-0.31	-7.29	3.79	-3.06	0.56	0.17	-3.42
1	17	538	5.66	-11.76	-5.30	-0.80	-8.41	3.84	-3.35	0.35	0.14	-3.59
1	17	539	5.95	-13.32	-5.93	-1.43	-9.37	3.75	-3.34	0.28	0.14	-3.55
1	17	540	6.64	-14.49	-6.54	-1.31	-10.24	3.81	-3.53	0.24	2.90e-02	-3.67
1	17	541	7.14	-15.52	-6.99	-1.39	-10.98	3.74	-3.46	0.24	3.41e-02	-3.60
1	17	542	7.78	-16.35	-7.37	-1.21	-11.67	3.85	-3.60	0.23	3.18e-02	-3.72
1	17	543	8.28	-17.11	-7.61	-1.22	-12.29	3.77	-3.52	0.22	2.99e-02	-3.64
1	17	544	8.87	-17.70	-7.78	-1.06	-12.85	3.89	-3.65	0.21	2.44e-02	-3.77
1	17	545	9.41	-18.25	-7.77	-1.08	-13.42	3.81	-3.57	0.21	2.50e-02	-3.69
1	17	546	10.02	-18.64	-7.68	-0.93	-13.93	3.94	-3.70	0.21	2.43e-02	-3.82
1	17	547	10.56	-19.01	-7.47	-0.98	-14.43	3.87	-3.62	0.21	3.00e-02	-3.75
1	17	548	11.19	-19.21	-7.19	-0.83	-14.86	3.99	-3.76	0.20	3.04e-02	-3.87
1	17	549	11.90	-19.28	-6.84	-0.55	-15.27	3.90	-3.69	0.18	3.33e-02	-3.79
1	17	550	12.29	-19.43	-6.42	-0.71	-15.60	4.01	-3.82	0.15	3.33e-02	-3.91
1	17	551	12.92	-19.37	-5.98	-0.48	-15.91	3.91	-3.74	0.14	3.69e-02	-3.82
1	17	552	13.29	-19.35	-5.47	-0.59	-16.14	4.03	-3.86	0.13	3.88e-02	-3.94
1	17	553	13.83	-19.21	-4.97	-0.41	-16.36	3.94	-3.76	0.13	4.19e-02	-3.85
1	17	554	14.21	-19.10	-4.43	-0.46	-16.54	4.04	-3.89	0.11	3.59e-02	-3.97
1	17	555	14.73	-18.91	-3.90	-0.28	-16.72	3.93	-3.81	9.53e-02	2.44e-02	-3.87
1	17	556	15.16	-18.71	-3.37	-0.17	-16.86	4.03	-3.95	7.60e-02	9.29e-03	-3.99
1	17	557	15.70	-18.47	-2.78	2.08e-02	-17.03	3.93	-3.86	6.61e-02	3.18e-03	-3.89
1	17	558	16.03	-18.31	-2.17	-0.11	-17.14	4.04	-3.98	6.02e-02	1.27e-03	-4.01
1	17	559	16.42	-18.15	-1.74	1.18e-02	-17.26	3.94	-3.88	5.75e-02	4.14e-03	-3.91
1	17	560	16.79	-17.87	-1.07	1.65e-03	-17.32	4.05	-4.00	3.70e-02	4.12e-03	-4.02
1	17	561	17.31	-17.41	-6.45e-02	-3.09e-02	-17.36	3.93	-3.92	1.17e-02	3.35e-03	-3.92
1	17	562	17.84	-16.84	1.05	-5.04e-02	-17.33	4.02	-4.03	-1.53e-02	2.09e-03	-4.03
1	17	563	18.15	-16.46	1.74	-4.67e-02	-17.28	3.90	-3.94	-4.10e-02	-3.58e-04	-3.92
1	17	564	18.30	-16.10	2.09	0.11	-17.17	3.98	-4.04	-5.60e-02	-1.15e-03	-4.01
1	17	565	18.45	-15.75	2.72	-1.43e-02	-17.05	3.86	-3.94	-7.38e-02	-6.86e-03	-3.90
1	17	566	18.69	-15.20	3.31	0.18	-16.88	3.94	-4.04	-8.76e-02	-1.43e-02	-3.99
1	17	567	18.90	-14.75	3.86	0.29	-16.73	3.81	-3.94	-0.11	-2.89e-02	-3.87

1	17	568	19.08	-14.22	4.39	0.47	-16.53	3.89	-4.05	-0.12	-3.82e-02	-3.97
1	17	569	19.20	-13.83	4.95	0.42	-16.36	3.76	-3.93	-0.13	-4.27e-02	-3.85
1	17	570	19.34	-13.29	5.45	0.60	-16.13	3.86	-4.02	-0.13	-3.92e-02	-3.94
1	17	571	19.37	-12.91	5.96	0.49	-15.91	3.74	-3.91	-0.14	-3.77e-02	-3.83
1	17	572	19.43	-12.29	6.42	0.72	-15.60	3.82	-4.01	-0.15	-3.44e-02	-3.91
1	17	573	19.29	-11.89	6.84	0.56	-15.27	3.69	-3.90	-0.18	-3.47e-02	-3.79
1	17	574	19.21	-11.19	7.19	0.83	-14.87	3.76	-3.99	-0.20	-3.21e-02	-3.87
1	17	575	19.02	-10.56	7.48	0.99	-14.43	3.62	-3.87	-0.22	-3.19e-02	-3.75
1	17	576	18.65	-10.02	7.69	0.94	-13.93	3.70	-3.94	-0.22	-2.66e-02	-3.82
1	17	577	18.26	-9.40	7.77	1.08	-13.42	3.57	-3.82	-0.22	-2.73e-02	-3.69
1	17	578	17.70	-8.86	7.78	1.06	-12.85	3.65	-3.89	-0.21	-2.59e-02	-3.77
1	17	579	17.11	-8.27	7.61	1.23	-12.28	3.52	-3.77	-0.22	-3.05e-02	-3.65
1	17	580	16.35	-7.77	7.36	1.22	-11.66	3.60	-3.85	-0.22	-3.20e-02	-3.72
1	17	581	15.52	-7.14	6.98	1.40	-10.98	3.46	-3.74	-0.24	-3.44e-02	-3.60
1	17	582	14.49	-6.64	6.52	1.32	-10.24	3.54	-3.81	-0.24	-2.94e-02	-3.67
1	17	583	13.30	-5.96	5.91	1.44	-9.37	3.34	-3.76	-0.28	-0.14	-3.55
1	17	584	11.74	-5.66	5.27	0.81	-8.41	3.35	-3.84	-0.35	-0.14	-3.59
1	17	585	9.94	-5.19	4.43	0.32	-7.28	3.06	-3.79	-0.56	-0.17	-3.42
1	17	586	7.62	-5.88	3.72	-1.97	-6.12	2.93	-3.81	-0.72	-0.16	-3.36
1	17	587	5.57	-6.06	2.91	-3.39	-4.89	2.57	-3.43	-0.72	-0.14	-2.99
1	17	588	3.79	-7.33	1.98	-5.52	-4.11	2.75	-2.76	-0.29	0.29	-2.74
1	17	589	1.45	-9.13	1.44	-9.12	-0.27	2.53	-1.72	0.15	0.67	-2.11
1	17	590	1.64	-13.72	0.90	-12.98	3.29	2.83	-0.93	0.76	1.14	-1.87
1	17	591	8.71	-2.45	-0.90	7.17	3.85	-0.14	-2.86	-1.00	-2.00	-1.27
1	17	592	4.95	-1.49	-1.48	4.94	0.25	0.53	-2.95	-0.88	-1.55	-1.71
1	17	593	5.90	-4.77	-2.50	3.63	-4.36	1.70	-3.35	-0.62	-1.03	-2.52
1	17	594	5.97	-7.47	-3.67	2.17	-6.05	2.59	-3.18	5.60e-02	-0.65	-2.86
1	17	595	6.46	-10.16	-4.92	1.22	-7.72	3.35	-3.32	0.38	-0.35	-3.31
1	17	596	6.42	-12.81	-6.08	-0.30	-9.17	3.45	-3.38	0.36	-0.29	-3.40
1	17	597	7.15	-14.69	-7.23	-0.31	-10.36	3.67	-3.58	0.34	-0.25	-3.61
1	17	598	7.69	-16.20	-8.11	-0.39	-11.30	3.62	-3.53	0.30	-0.22	-3.57
1	17	599	8.19	-17.46	-8.84	-0.42	-12.11	3.73	-3.70	0.23	-0.20	-3.71
1	17	600	8.68	-18.45	-9.35	-0.42	-12.80	3.66	-3.62	0.23	-0.19	-3.63
1	17	601	9.15	-19.30	-9.75	-0.40	-13.44	3.77	-3.77	0.17	-0.17	-3.77
1	17	602	9.66	-19.95	-9.93	-0.36	-14.01	3.69	-3.68	0.17	-0.16	-3.68
1	17	603	10.17	-20.47	-9.98	-0.31	-14.54	3.83	-3.81	0.17	-0.15	-3.82
1	17	604	10.70	-20.94	-9.94	-0.30	-15.07	3.74	-3.72	0.17	-0.15	-3.73
1	17	605	11.25	-21.25	-9.75	-0.25	-15.54	3.88	-3.85	0.17	-0.14	-3.86
1	17	606	11.72	-21.55	-9.45	-0.39	-16.01	3.80	-3.76	0.17	-0.13	-3.78
1	17	607	12.37	-21.63	-9.06	-0.20	-16.42	3.94	-3.90	0.15	-0.12	-3.92
1	17	608	12.84	-21.76	-8.58	-0.34	-16.80	3.84	-3.81	0.14	-0.11	-3.82
1	17	609	13.46	-21.68	-8.05	-0.18	-17.12	3.97	-3.95	0.12	-9.87e-02	-3.96
1	17	610	13.90	-21.67	-7.46	-0.30	-17.42	3.87	-3.85	0.11	-8.90e-02	-3.86
1	17	611	14.39	-21.51	-6.84	-0.28	-17.65	4.00	-3.97	0.10	-7.91e-02	-3.99
1	17	612	14.91	-21.35	-6.19	-0.25	-17.88	3.90	-3.87	0.10	-6.92e-02	-3.89
1	17	613	15.38	-21.14	-5.54	-0.22	-18.06	4.03	-4.01	8.94e-02	-6.25e-02	-4.02
1	17	614	15.89	-20.90	-4.83	-0.17	-18.25	3.92	-3.90	7.58e-02	-5.59e-02	-3.91
1	17	615	16.38	-20.60	-4.09	-0.13	-18.39	4.06	-4.02	6.12e-02	-2.26e-02	-4.04
1	17	616	16.90	-20.33	-3.37	-5.22e-02	-18.54	3.95	-3.92	5.18e-02	-2.25e-02	-3.93
1	17	617	17.35	-20.03	-2.60	-7.82e-02	-18.64	4.07	-4.04	4.62e-02	-1.90e-02	-4.05
1	17	618	17.85	-19.70	-1.83	-2.23e-02	-18.75	3.96	-3.93	4.23e-02	-1.27e-02	-3.95
1	17	619	18.29	-19.32	-1.01	-2.36e-02	-18.80	4.08	-4.06	2.70e-02	-5.81e-03	-4.07
1	17	620	18.79	-18.87	-6.92e-02	-8.62e-03	-18.83	3.96	-3.95	8.23e-03	1.30e-03	-3.96
1	17	621	19.24	-18.38	0.84	2.33e-02	-18.81	4.07	-4.07	-1.19e-02	8.24e-03	-4.07
1	17	622	19.62	-17.94	1.66	1.21e-02	-18.76	3.94	-3.96	-3.07e-02	1.44e-02	-3.95
1	17	623	19.97	-17.42	2.47	7.86e-02	-18.66	4.05	-4.07	-4.24e-02	2.00e-02	-4.06
1	17	624	20.28	-16.96	3.27	5.01e-02	-18.55	3.92	-3.95	-5.56e-02	2.18e-02	-3.94
1	17	625	20.56	-16.42	4.01	0.14	-18.39	4.02	-4.07	-6.72e-02	2.19e-02	-4.04
1	17	626	20.86	-15.91	4.78	0.17	-18.24	3.90	-3.93	-8.15e-02	5.60e-02	-3.91
1	17	627	21.11	-15.37	5.50	0.23	-18.05	4.01	-4.03	-9.09e-02	6.31e-02	-4.02
1	17	628	21.33	-14.91	6.16	0.26	-17.87	3.87	-3.90	-9.97e-02	7.03e-02	-3.89
1	17	629	21.49	-14.39	6.82	0.29	-17.64	3.98	-4.00	-0.10	8.02e-02	-3.99
1	17	630	21.66	-13.89	7.45	0.31	-17.41	3.85	-3.87	-0.11	8.98e-02	-3.86
1	17	631	21.68	-13.45	8.04	0.19	-17.12	3.95	-3.97	-0.12	9.94e-02	-3.96
1	17	632	21.76	-12.82	8.59	0.35	-16.80	3.81	-3.84	-0.14	0.11	-3.83
1	17	633	21.64	-12.36	9.07	0.21	-16.41	3.90	-3.94	-0.15	0.12	-3.92
1	17	634	21.56	-11.71	9.46	0.39	-16.00	3.76	-3.80	-0.17	0.13	-3.78
1	17	635	21.26	-11.24	9.77	0.25	-15.54	3.85	-3.88	-0.17	0.14	-3.86
1	17	636	20.95	-10.69	9.95	0.30	-15.07	3.72	-3.74	-0.17	0.15	-3.73
1	17	637	20.47	-10.16	9.99	0.32	-14.53	3.81	-3.83	-0.17	0.15	-3.82
1	17	638	19.95	-9.66	9.93	0.36	-14.01	3.68	-3.69	-0.17	0.17	-3.68
1	17	639	19.30	-9.15	9.75	0.40	-13.43	3.77	-3.77	-0.17	0.18	-3.77
1	17	640	18.44	-8.67	9.34	0.42	-12.80	3.62	-3.66	-0.23	0.19	-3.63
1	17	641	17.45	-8.19	8.83	0.43	-12.11	3.70	-3.73	-0.23	0.20	-3.71
1	17	642	16.18	-7.69	8.09	0.40	-11.30	3.54	-3.62	-0.30	0.22	-3.57
1	17	643	14.68	-7.15	7.21	0.32	-10.36	3.58	-3.67	-0.34	0.25	-3.61
1	17	644	12.78	-6.43	6.05	0.30	-9.16	3.38	-3.45	-0.36	0.29	-3.40
1	17	645	10.13	-6.46	4.88	-1.21	-7.71	3.32	-3.34	-0.38	0.36	-3.31
1	17	646	7.42	-5.97	3.61	-2.16	-6.04	3.18	-2.59	-5.69e-02	0.65	-2.86

1	17	647	4.71	-5.89	2.43	-3.62	-4.35	3.35	-1.70	0.62	1.03	-2.52
1	17	648	1.46	-4.95	1.45	-4.94	0.26	2.96	-0.52	0.88	1.56	-1.71
1	17	649	2.45	-8.71	0.91	-7.17	3.85	2.87	0.14	1.00	2.00	-1.27
1	17	650	4.14	-3.95	-3.02	3.21	2.58	-0.64	-2.55	-1.42	-1.77	-0.94
1	17	651	-0.45	-3.44	-3.43	-0.46	0.19	-0.60	-3.09	-1.76	-1.93	-1.24
1	17	652	2.95	-5.66	-4.37	1.66	-3.08	0.51	-3.36	-1.50	-1.36	-1.93
1	17	653	2.82	-7.47	-5.16	0.51	-4.29	1.94	-3.05	-0.16	-0.95	-2.46
1	17	654	2.81	-9.20	-6.89	0.50	-4.73	2.81	-3.07	0.44	-0.69	-2.88
1	17	655	2.47	-10.83	-8.84	0.48	-4.74	2.96	-3.24	0.29	-0.58	-3.07
1	17	656	2.15	-12.30	-10.24	9.32e-02	-5.05	3.13	-3.37	0.25	-0.49	-3.23
1	17	657	2.08	-13.54	-11.27	-0.19	-5.51	3.17	-3.38	0.24	-0.45	-3.26
1	17	658	2.13	-14.41	-11.97	-0.31	-5.87	3.26	-3.44	0.22	-0.41	-3.34
1	17	659	2.35	-15.01	-12.42	-0.24	-6.18	3.26	-3.43	0.22	-0.39	-3.33
1	17	660	2.48	-15.43	-12.67	-0.28	-6.47	3.33	-3.49	0.21	-0.36	-3.40
1	17	661	2.71	-15.68	-12.76	-0.22	-6.73	3.32	-3.46	0.20	-0.34	-3.38
1	17	662	2.89	-15.81	-12.70	-0.22	-6.96	3.39	-3.51	0.20	-0.32	-3.44
1	17	663	3.14	-15.83	-12.51	-0.18	-7.21	3.38	-3.49	0.19	-0.31	-3.43
1	17	664	3.37	-15.73	-12.20	-0.17	-7.42	3.45	-3.54	0.19	-0.28	-3.49
1	17	665	3.63	-15.56	-11.78	-0.15	-7.63	3.44	-3.52	0.18	-0.27	-3.47
1	17	666	3.90	-15.26	-11.23	-0.13	-7.81	3.51	-3.57	0.18	-0.24	-3.53
1	17	667	4.17	-14.92	-10.61	-0.14	-7.98	3.49	-3.55	0.17	-0.23	-3.51
1	17	668	4.49	-14.49	-9.90	-0.11	-8.13	3.55	-3.60	0.17	-0.21	-3.57
1	17	669	4.78	-14.07	-9.16	-0.13	-8.27	3.53	-3.56	0.16	-0.19	-3.54
1	17	670	5.12	-13.60	-8.39	-8.72e-02	-8.39	3.60	-3.61	0.16	-0.17	-3.60
1	17	671	5.43	-13.15	-7.61	-0.10	-8.50	3.58	-3.57	0.16	-0.16	-3.57
1	17	672	5.81	-12.63	-6.76	-5.36e-02	-8.59	3.58	-3.67	4.24e-02	-0.13	-3.63
1	17	673	6.24	-12.11	-5.91	4.17e-02	-8.68	3.55	-3.64	3.35e-02	-0.12	-3.60
1	17	674	6.57	-11.61	-5.02	-2.11e-02	-8.74	3.61	-3.68	2.82e-02	-9.74e-02	-3.65
1	17	675	7.00	-11.10	-4.12	2.38e-02	-8.81	3.58	-3.64	1.94e-02	-8.12e-02	-3.61
1	17	676	7.35	-10.62	-3.20	-6.45e-02	-8.85	3.63	-3.69	1.27e-02	-6.34e-02	-3.66
1	17	677	7.83	-10.09	-2.27	1.26e-02	-8.89	3.60	-3.65	5.24e-03	-4.74e-02	-3.62
1	17	678	8.26	-9.60	-1.34	-2.59e-03	-8.90	3.68	-3.67	1.94e-03	6.61e-03	-3.67
1	17	679	8.89	-8.92	-3.15e-02	1.65e-03	-8.91	3.63	-3.63	-3.79e-03	-2.69e-04	-3.63
1	17	680	9.49	-8.34	1.16	-1.03e-02	-8.90	3.67	-3.68	-7.24e-03	-6.61e-03	-3.67
1	17	681	9.95	-7.93	2.03	-1.06e-02	-8.88	3.65	-3.61	-9.88e-03	4.83e-02	-3.63
1	17	682	10.48	-7.46	3.03	-6.80e-03	-8.84	3.69	-3.64	-1.53e-02	6.44e-02	-3.66
1	17	683	11.01	-7.03	4.00	-2.38e-02	-8.80	3.65	-3.58	-1.85e-02	8.28e-02	-3.62
1	17	684	11.56	-6.58	4.95	2.27e-02	-8.73	3.69	-3.61	-2.70e-02	9.98e-02	-3.65
1	17	685	12.06	-6.26	5.87	-6.03e-02	-8.67	3.64	-3.55	-3.20e-02	0.12	-3.60
1	17	686	12.60	-5.81	6.73	5.85e-02	-8.58	3.68	-3.58	-4.11e-02	0.14	-3.63
1	17	687	13.12	-5.43	7.58	0.11	-8.49	3.57	-3.57	-0.16	0.16	-3.57
1	17	688	13.58	-5.11	8.38	9.15e-02	-8.38	3.61	-3.60	-0.16	0.17	-3.60
1	17	689	14.06	-4.77	9.15	0.13	-8.27	3.57	-3.53	-0.16	0.19	-3.54
1	17	690	14.49	-4.48	9.90	0.11	-8.13	3.60	-3.56	-0.17	0.21	-3.57
1	17	691	14.92	-4.16	10.62	0.14	-7.98	3.55	-3.49	-0.17	0.23	-3.51
1	17	692	15.28	-3.88	11.26	0.14	-7.80	3.58	-3.51	-0.18	0.25	-3.53
1	17	693	15.58	-3.62	11.81	0.15	-7.62	3.52	-3.44	-0.19	0.27	-3.47
1	17	694	15.76	-3.36	12.23	0.17	-7.42	3.54	-3.45	-0.19	0.28	-3.49
1	17	695	15.86	-3.13	12.54	0.18	-7.21	3.49	-3.38	-0.19	0.31	-3.43
1	17	696	15.83	-2.88	12.72	0.22	-6.96	3.51	-3.39	-0.20	0.32	-3.44
1	17	697	15.69	-2.70	12.77	0.22	-6.73	3.47	-3.32	-0.20	0.35	-3.38
1	17	698	15.42	-2.48	12.66	0.28	-6.46	3.49	-3.33	-0.20	0.36	-3.40
1	17	699	15.01	-2.35	12.42	0.24	-6.18	3.43	-3.26	-0.21	0.39	-3.33
1	17	700	14.41	-2.13	11.96	0.32	-5.87	3.45	-3.26	-0.22	0.41	-3.34
1	17	701	13.53	-2.08	11.26	0.20	-5.50	3.39	-3.17	-0.23	0.45	-3.26
1	17	702	12.34	-1.87	10.23	0.23	-5.04	3.37	-3.13	-0.25	0.49	-3.23
1	17	703	10.81	-2.47	8.82	-0.48	-4.74	3.24	-2.95	-0.29	0.58	-3.07
1	17	704	9.18	-2.81	6.87	-0.50	-4.72	3.07	-2.81	-0.43	0.70	-2.88
1	17	705	7.44	-2.83	5.13	-0.51	-4.29	3.05	-1.93	0.16	0.95	-2.46
1	17	706	5.64	-2.95	4.34	-1.65	-3.07	3.36	-0.50	1.50	1.36	-1.93
1	17	707	3.43	0.44	3.42	0.46	0.19	3.09	0.60	1.76	1.93	-1.24
1	17	708	3.95	-4.14	3.02	-3.21	2.58	2.55	0.64	1.42	1.77	-0.94
1	17	709	3.00	0.44	1.41	2.02	1.24	3.11e-03	-2.20	-1.09	-1.11	-1.10
1	17	710	-0.49	-3.84	-0.49	-3.84	-5.87e-03	-0.64	-2.79	-1.74	-1.68	-1.07
1	17	711	1.39	-3.50	-2.92	0.81	-1.57	-0.15	-3.14	-1.99	-1.29	-1.45
1	17	712	0.27	-7.27	-6.80	-0.20	-1.82	0.99	-3.24	-1.30	-0.94	-2.11
1	17	713	0.89	-9.79	-9.71	0.82	-0.87	2.06	-2.91	-0.17	-0.67	-2.47
1	17	714	1.17	-11.94	-11.91	1.14	0.59	2.68	-2.87	0.39	-0.58	-2.73
1	17	715	-1.35e-02	-13.46	-13.37	-0.11	1.13	2.73	-2.94	0.27	-0.48	-2.81
1	17	716	1.17	-14.44	-14.36	1.09	1.09	2.82	-3.04	0.24	-0.46	-2.91
1	17	717	2.02e-02	-15.02	-14.93	-6.14e-02	1.10	2.84	-3.03	0.21	-0.40	-2.92
1	17	718	1.08	-15.37	-15.29	1.01	1.12	2.90	-3.10	0.20	-0.40	-2.99
1	17	719	-0.52	-15.49	-15.40	-0.61	1.15	2.91	-3.08	0.19	-0.36	-2.98
1	17	720	1.00	-15.48	-15.39	0.91	1.16	2.96	-3.13	0.18	-0.35	-3.03
1	17	721	-0.44	-15.31	-15.21	-0.54	1.18	2.96	-3.11	0.17	-0.32	-3.02
1	17	722	0.87	-15.04	-14.95	0.78	1.20	3.01	-3.16	0.16	-0.31	-3.07
1	17	723	9.71e-02	-14.63	-14.53	-4.71e-03	1.22	3.00	-3.13	0.15	-0.28	-3.06
1	17	724	0.77	-14.10	-14.00	0.67	1.24	3.05	-3.19	0.14	-0.28	-3.11
1	17	725	9.24e-02	-13.44	-13.32	-2.82e-02	1.27	3.05	-3.16	0.13	-0.25	-3.10

1	17	726	0.71	-12.66	-12.54	0.58	1.29	3.10	-3.21	0.12	-0.24	-3.15
1	17	727	0.10	-11.81	-11.67	-4.06e-02	1.30	3.09	-3.18	0.11	-0.21	-3.13
1	17	728	0.66	-10.93	-10.78	0.51	1.31	3.14	-3.23	0.10	-0.20	-3.18
1	17	729	0.13	-10.03	-9.85	-3.96e-02	1.31	3.12	-3.20	9.79e-02	-0.17	-3.16
1	17	730	0.58	-9.10	-8.91	0.40	1.32	3.17	-3.24	9.15e-02	-0.16	-3.20
1	17	731	0.17	-8.15	-7.93	-4.45e-02	1.33	3.16	-3.21	8.30e-02	-0.13	-3.18
1	17	732	0.16	-7.17	-6.91	-9.69e-02	1.34	3.21	-3.25	7.68e-02	-0.12	-3.23
1	17	733	0.25	-6.16	-5.87	-4.31e-02	1.35	3.19	-3.21	6.85e-02	-9.45e-02	-3.20
1	17	734	0.27	-5.17	-4.81	-9.09e-02	1.35	3.24	-3.25	6.92e-02	-7.92e-02	-3.24
1	17	735	0.41	-4.18	-3.74	-3.74e-02	1.36	3.21	-3.21	6.30e-02	-5.77e-02	-3.21
1	17	736	0.56	-3.21	-2.61	-4.13e-02	1.38	3.24	-3.27	1.05e-02	-4.13e-02	-3.25
1	17	737	0.83	-2.30	-1.45	-1.80e-02	1.40	3.21	-3.23	6.38e-04	-2.21e-02	-3.22
1	17	738	1.32	-1.50	-0.20	1.21e-02	1.41	3.26	-3.26	-2.15e-03	-1.86e-04	-3.26
1	17	739	2.05	-0.96	1.08	1.24e-02	1.41	3.23	-3.22	-7.26e-03	2.19e-02	-3.22
1	17	740	2.98	-0.61	2.31	5.83e-02	1.40	3.27	-3.24	-1.46e-02	4.25e-02	-3.25
1	17	741	3.99	-0.45	3.51	3.99e-02	1.39	3.21	-3.22	-6.25e-02	5.89e-02	-3.22
1	17	742	5.05	-0.29	4.67	9.04e-02	1.37	3.25	-3.24	-6.80e-02	8.11e-02	-3.24
1	17	743	6.09	-0.26	5.79	4.76e-02	1.36	3.22	-3.19	-6.97e-02	9.68e-02	-3.20
1	17	744	7.13	-0.16	6.87	9.62e-02	1.35	3.25	-3.21	-7.81e-02	0.12	-3.23
1	17	745	8.12	-0.17	7.90	4.57e-02	1.33	3.21	-3.16	-8.27e-02	0.14	-3.18
1	17	746	9.08	-0.59	8.89	-0.40	1.32	3.24	-3.17	-9.11e-02	0.16	-3.20
1	17	747	10.01	-0.13	9.84	4.11e-02	1.31	3.20	-3.12	-9.72e-02	0.17	-3.16
1	17	748	10.92	-0.66	10.77	-0.51	1.31	3.23	-3.14	-0.10	0.20	-3.18
1	17	749	11.82	-0.10	11.67	4.24e-02	1.30	3.18	-3.09	-0.11	0.21	-3.13
1	17	750	12.68	-0.71	12.56	-0.59	1.29	3.21	-3.10	-0.12	0.24	-3.15
1	17	751	13.46	-9.07e-02	13.34	2.97e-02	1.27	3.16	-3.05	-0.13	0.25	-3.10
1	17	752	14.14	-0.77	14.04	-0.67	1.24	3.19	-3.05	-0.14	0.28	-3.11
1	17	753	14.67	-9.59e-02	14.57	5.30e-03	1.22	3.14	-3.00	-0.15	0.28	-3.06
1	17	754	15.08	-0.87	14.99	-0.78	1.20	3.16	-3.01	-0.16	0.32	-3.08
1	17	755	15.33	0.45	15.24	0.54	1.18	3.11	-2.95	-0.17	0.32	-3.02
1	17	756	15.49	-1.00	15.41	-0.92	1.16	3.13	-2.96	-0.18	0.35	-3.03
1	17	757	15.49	0.52	15.41	0.61	1.14	3.08	-2.91	-0.19	0.36	-2.98
1	17	758	15.37	-1.09	15.29	-1.01	1.12	3.10	-2.90	-0.20	0.40	-2.99
1	17	759	15.02	-2.03e-02	14.94	6.12e-02	1.10	3.04	-2.84	-0.21	0.41	-2.92
1	17	760	14.44	-1.17	14.37	-1.09	1.09	3.05	-2.82	-0.23	0.46	-2.91
1	17	761	13.47	1.37e-02	13.38	0.11	1.13	2.94	-2.73	-0.27	0.48	-2.81
1	17	762	11.95	-1.17	11.92	-1.14	0.59	2.87	-2.68	-0.39	0.58	-2.73
1	17	763	9.80	-0.89	9.73	-0.82	-0.87	2.91	-2.06	0.17	0.68	-2.47
1	17	764	7.28	-0.27	6.81	0.20	-1.83	3.24	-0.99	1.30	0.94	-2.11
1	17	765	3.51	-1.39	2.93	-0.81	-1.58	3.14	0.15	1.99	1.29	-1.45
1	17	766	3.84	0.50	0.50	3.84	-6.76e-03	2.79	0.64	1.74	1.68	-1.07
1	17	767	-0.43	-2.99	-1.41	-2.01	1.24	2.20	-1.92e-03	1.09	1.11	-1.10
1	20	1	-0.41	-0.75	-0.43	-0.73	-7.84e-02	2.04	-2.09	-0.98	0.92	1.84
1	20	2	-0.81	-2.04	-0.82	-2.03	0.12	-1.55	-7.28	-2.22	-6.61	1.84
1	20	3	-0.64	-1.63	-0.93	-1.35	0.45	1.42	-1.36	-9.25e-02	0.16	1.39
1	20	4	-0.98	-1.72	-1.38	-1.33	0.37	2.62	-2.18	1.23	-0.79	2.18
1	20	5	-1.54	-1.93	-1.86	-1.60	0.14	3.01	-1.41	2.14	-0.54	1.76
1	20	6	-1.53	-2.10	-2.07	-1.56	0.13	2.87	-1.10	2.35	-0.58	1.34
1	20	7	-1.49	-2.37	-2.35	-1.51	0.13	2.53	-0.85	2.26	-0.59	0.91
1	20	8	-1.45	-2.67	-2.65	-1.46	0.13	1.98	-0.71	1.88	-0.61	0.52
1	20	9	-1.39	-2.84	-2.84	-1.40	5.33e-02	1.21	-0.59	1.21	-0.59	2.60e-02
1	20	10	-0.15	-1.19	-0.18	-1.16	-0.19	-0.17	-1.03	-0.41	-0.80	-0.39
1	20	11	0.36	-1.37	0.33	-1.34	-0.22	-0.12	-3.21	-3.09	-0.24	0.59
1	20	12	-1.59	-2.31	-2.28	-1.61	0.14	-4.97	-8.48	-5.93	-7.52	1.56
1	20	13	-1.50	-3.53	-3.41	-1.63	0.49	0.19	-3.91	-3.57	-0.15	1.13
1	20	14	-1.06	-4.37	-4.31	-1.13	0.45	1.14	-3.54	-1.41	-0.99	2.33
1	20	15	-1.36	-4.66	-4.64	-1.37	0.19	2.22	-2.20	0.68	-0.65	2.11
1	20	16	-1.38	-4.61	-4.61	-1.38	6.51e-02	2.50	-1.71	1.45	-0.66	1.82
1	20	17	-1.37	-4.44	-4.44	-1.37	1.04e-02	2.62	-1.31	1.95	-0.64	1.48
1	20	18	-1.36	-4.20	-4.20	-1.36	-2.81e-02	2.54	-1.03	2.15	-0.63	1.12
1	20	19	-1.34	-3.91	-3.91	-1.34	-6.54e-02	2.29	-0.83	2.09	-0.62	0.78
1	20	20	-1.30	-3.56	-3.55	-1.30	-0.13	1.85	-0.72	1.75	-0.63	0.49
1	20	21	-1.21	-3.09	-3.05	-1.24	-0.25	1.22	-0.67	1.14	-0.60	-0.36
1	20	22	-0.17	-1.31	-0.56	-0.92	-0.54	-9.55e-02	-1.09	-0.40	-0.78	-0.46
1	20	23	1.45	-1.23	1.37	-1.15	-0.47	-0.16	-3.16	-3.07	-0.26	0.53
1	20	24	1.17	-1.44	1.17	-1.44	-8.11e-03	-4.79	-8.31	-5.83	-7.28	1.60
1	20	25	1.53	-1.14	1.50	-1.12	0.28	0.18	-3.88	-3.55	-0.14	1.10
1	20	26	1.74	-0.99	1.72	-0.97	0.26	1.08	-3.52	-1.45	-0.98	2.29
1	20	27	1.61	-1.16	1.61	-1.16	3.55e-02	2.19	-2.19	0.63	-0.63	2.09
1	20	28	1.27	-1.18	1.26	-1.17	-0.11	2.50	-1.70	1.44	-0.63	1.83
1	20	29	0.88	-1.18	0.86	-1.16	-0.18	2.64	-1.30	1.95	-0.61	1.50
1	20	30	0.64	-1.17	0.62	-1.14	-0.21	2.58	-1.02	2.17	-0.60	1.15
1	20	31	0.76	-1.15	0.73	-1.12	-0.23	2.35	-0.82	2.13	-0.59	0.82
1	20	32	1.23	-1.12	1.20	-1.08	-0.27	1.93	-0.70	1.82	-0.59	0.53
1	20	33	1.98	-1.05	1.93	-1.00	-0.39	1.31	-0.63	1.24	-0.56	-0.36
1	20	34	3.63	-0.73	3.48	-0.58	-0.81	-1.01e-02	-0.96	-0.24	-0.74	-0.41
1	20	35	3.89	-0.41	3.80	-0.32	-0.62	-0.15	-2.94	-2.83	-0.26	0.54
1	20	36	2.76	-1.31	2.76	-1.31	-5.24e-02	-4.43	-7.98	-5.48	-6.94	1.62
1	20	37	3.89	-0.32	3.87	-0.30	0.30	0.20	-3.64	-3.31	-0.13	1.09

1	20	38	4.46	-0.64	4.44	-0.62	0.34	1.10	-3.38	-1.35	-0.93	2.23
1	20	39	4.22	-0.89	4.22	-0.89	-9.64e-03	2.18	-2.10	0.68	-0.59	2.04
1	20	40	4.59	-0.92	4.59	-0.92	-0.11	2.55	-1.60	1.54	-0.59	1.78
1	20	41	5.07	-0.91	5.07	-0.91	-0.14	2.70	-1.21	2.05	-0.56	1.45
1	20	42	5.58	-0.89	5.58	-0.88	-0.14	2.67	-0.93	2.29	-0.55	1.11
1	20	43	6.08	-0.86	6.08	-0.86	-0.14	2.48	-0.73	2.29	-0.53	0.77
1	20	44	6.60	-0.82	6.60	-0.82	-0.16	2.12	-0.61	2.04	-0.53	0.47
1	20	45	7.26	-0.73	7.25	-0.72	-0.27	1.61	-0.55	1.55	-0.49	-0.34
1	20	46	8.78	-0.43	8.72	-0.37	-0.74	0.41	-0.85	0.20	-0.64	-0.47
1	20	47	8.15	0.31	8.12	0.34	-0.48	-0.14	-2.24	-2.19	-0.20	0.34
1	20	48	5.67	-1.09	5.67	-1.08	0.11	-3.89	-7.08	-4.53	-6.43	1.28
1	20	49	7.13	0.18	7.07	0.24	0.67	3.28e-03	-2.50	-2.38	-0.12	0.55
1	20	50	7.55	-0.46	7.43	-0.34	0.95	1.07	-2.20	-0.38	-0.75	1.63
1	20	51	6.05	-0.75	5.99	-0.70	0.61	2.35	-1.05	1.71	-0.41	1.33
1	20	52	5.25	-0.83	5.18	-0.76	0.61	2.99	-0.65	2.73	-0.38	0.94
1	20	53	4.41	-0.87	4.32	-0.78	0.69	3.48	-0.40	3.42	-0.34	0.48
1	20	54	3.44	-0.91	3.30	-0.78	0.75	3.81	-0.32	3.80	-0.31	-0.22
1	20	55	2.41	-0.91	2.24	-0.74	0.74	3.98	-0.34	3.90	-0.26	-0.58
1	20	56	1.57	-0.66	1.47	-0.56	0.47	3.60	-0.66	3.29	-0.35	-1.10
1	20	57	0.94	-0.29	0.92	-0.27	0.14	2.15	-0.13	1.77	0.24	-0.85
1	20	58	0.13	-0.93	0.12	-0.93	7.46e-02	-0.28	-4.78	-0.35	-4.71	-0.55
1	20	59	-2.31e-02	-0.28	-0.10	-0.21	0.12	2.40	-0.86	0.81	0.73	-1.63
1	20	60	0.50	-0.83	0.48	-0.81	-0.17	1.15	-2.42	0.20	-1.47	-1.57
1	20	61	-0.36	-1.77	-0.36	-1.77	8.52e-02	-0.35	-3.21	-1.26	-2.30	1.33
1	20	62	-0.80	-2.25	-0.98	-2.06	0.49	1.63	-4.56	-0.92	-2.01	3.05
1	20	63	-0.81	-2.93	-0.99	-2.76	0.59	2.08	-3.03	0.97	-1.91	2.11
1	20	64	-0.99	-3.08	-1.15	-2.92	0.55	2.27	-2.84	1.41	-1.98	1.92
1	20	65	-1.31	-3.08	-1.50	-2.88	0.55	2.12	-2.53	1.60	-2.01	1.47
1	20	66	-1.60	-3.02	-1.83	-2.79	0.53	1.79	-2.32	1.52	-2.05	1.03
1	20	67	-1.83	-2.93	-2.08	-2.67	0.46	1.30	-2.17	1.18	-2.05	0.63
1	20	68	-2.22	-2.56	-2.25	-2.53	9.48e-02	0.46	-2.07	0.46	-2.07	5.59e-02
1	20	69	-2.03	-2.57	-2.31	-2.29	-0.27	-0.55	-2.00	-0.55	-2.00	1.57e-02
1	20	70	-1.86	-2.39	-2.30	-1.94	-0.20	-1.16	-2.73	-1.94	-1.95	-0.79
1	20	71	-1.78	-2.96	-2.93	-1.82	0.19	-2.61	-5.17	-4.68	-3.10	1.01
1	20	72	-1.79	-3.77	-3.52	-2.04	0.65	-0.24	-6.32	-4.08	-2.48	2.93
1	20	73	-1.95	-3.75	-3.48	-2.22	0.64	0.60	-4.00	-1.24	-2.16	2.25
1	20	74	-2.29	-3.69	-3.60	-2.38	0.34	1.28	-3.63	-0.21	-2.14	2.25
1	20	75	-2.41	-3.64	-3.61	-2.44	0.18	1.67	-3.12	0.66	-2.11	1.95
1	20	76	-2.45	-3.54	-3.54	-2.46	6.00e-02	1.93	-2.75	1.29	-2.11	1.61
1	20	77	-2.44	-3.39	-3.38	-2.45	-5.95e-02	1.86	-2.48	1.47	-2.08	1.25
1	20	78	-2.39	-3.18	-3.15	-2.42	-0.14	1.62	-2.30	1.41	-2.08	0.89
1	20	79	-2.26	-2.94	-2.84	-2.35	-0.24	1.21	-2.16	1.10	-2.05	0.59
1	20	80	-1.94	-2.77	-2.47	-2.24	-0.40	0.46	-2.05	0.45	-2.04	-0.17
1	20	81	-1.37	-2.75	-2.12	-2.00	-0.69	-0.41	-2.06	-0.52	-1.96	-0.40
1	20	82	-0.58	-1.94	-0.97	-1.56	-0.61	-1.10	-2.60	-1.82	-1.89	-0.75
1	20	83	-1.01	-1.65	-1.03	-1.63	-0.11	-2.57	-5.09	-4.65	-3.02	0.96
1	20	84	-1.56	-2.07	-1.90	-1.73	0.24	-0.32	-6.26	-4.14	-2.44	2.85
1	20	85	-0.88	-2.07	-0.94	-2.00	0.26	0.61	-3.92	-1.22	-2.08	2.22
1	20	86	-0.16	-2.15	-0.16	-2.15	-4.58e-03	1.30	-3.55	-0.19	-2.05	2.24
1	20	87	0.42	-2.23	0.39	-2.21	-0.24	1.70	-3.05	0.68	-2.02	1.96
1	20	88	0.84	-2.26	0.81	-2.22	-0.32	1.98	-2.68	1.31	-2.01	1.63
1	20	89	0.63	-2.26	0.58	-2.21	-0.37	1.93	-2.40	1.51	-1.98	1.28
1	20	90	0.66	-2.24	0.60	-2.18	-0.42	1.71	-2.22	1.47	-1.98	0.94
1	20	91	1.01	-2.19	0.93	-2.11	-0.50	1.31	-2.07	1.19	-1.95	0.64
1	20	92	1.56	-2.10	1.44	-1.98	-0.65	0.56	-1.94	0.56	-1.94	4.15e-02
1	20	93	1.91	-1.94	1.67	-1.70	-0.93	-0.36	-1.87	-0.38	-1.85	-0.16
1	20	94	2.31	-1.02	2.15	-0.86	-0.71	-1.03	-2.36	-1.60	-1.79	-0.66
1	20	95	2.24	-1.47	2.23	-1.46	-0.20	-2.41	-4.86	-4.39	-2.89	0.97
1	20	96	2.23	-1.03	2.23	-1.02	9.83e-02	-0.25	-6.01	-3.92	-2.34	2.77
1	20	97	2.63	-1.72	2.62	-1.72	0.18	0.71	-3.74	-1.05	-1.98	2.18
1	20	98	3.19	-1.89	3.19	-1.89	-1.94e-02	1.51	-3.32	0.12	-1.93	2.19
1	20	99	3.50	-1.96	3.49	-1.96	-0.16	1.92	-2.85	0.96	-1.90	1.91
1	20	100	3.83	-1.98	3.82	-1.97	-0.24	2.06	-2.52	1.43	-1.89	1.58
1	20	101	4.19	-1.98	4.18	-1.96	-0.28	2.03	-2.24	1.64	-1.85	1.23
1	20	102	4.58	-1.94	4.57	-1.93	-0.28	1.84	-2.05	1.63	-1.84	0.88
1	20	103	5.00	-1.88	4.98	-1.86	-0.31	1.50	-1.89	1.40	-1.79	0.56
1	20	104	5.40	-1.75	5.38	-1.73	-0.40	0.79	-1.82	0.73	-1.77	-0.38
1	20	105	5.29	-1.51	5.24	-1.46	-0.59	0.12	-1.75	4.25e-02	-1.67	-0.37
1	20	106	5.54	-0.56	5.53	-0.55	-0.30	-0.22	-2.50	-1.12	-1.60	-1.12
1	20	107	5.09	-1.31	5.08	-1.31	0.14	-2.32	-3.94	-3.65	-2.61	0.62
1	20	108	4.51	-0.60	4.43	-0.52	0.64	-0.30	-4.82	-3.08	-2.05	2.20
1	20	109	4.56	-1.62	4.37	-1.43	1.06	0.78	-2.61	-0.18	-1.65	1.53
1	20	110	4.64	-1.81	4.48	-1.65	1.01	1.67	-2.17	1.07	-1.56	1.40
1	20	111	4.20	-1.90	4.01	-1.71	1.07	2.27	-1.73	2.02	-1.48	0.97
1	20	112	3.71	-1.94	3.46	-1.68	1.18	2.72	-1.48	2.66	-1.42	0.50
1	20	113	3.22	-1.90	2.88	-1.57	1.26	3.04	-1.35	3.03	-1.33	-0.22
1	20	114	2.70	-1.74	2.32	-1.36	1.24	3.18	-1.36	3.09	-1.27	-0.62
1	20	115	2.05	-1.31	1.73	-1.00	0.98	3.06	-1.39	2.83	-1.16	-0.99
1	20	116	1.50	-0.57	1.36	-0.43	0.52	3.23	-1.91	2.38	-1.06	-1.91

1	20	117	0.69	0.11	0.57	0.22	0.23	0.52	-1.99	0.19	-1.67	-0.84
1	20	118	1.44e-02	-0.51	-6.33e-02	-0.43	0.19	-0.49	-2.59	-1.60	-1.49	1.05
1	20	119	-0.35	-2.57	-0.36	-2.56	-0.15	-0.59	-6.08	-0.75	-5.92	0.94
1	20	120	-0.39	-3.44	-0.40	-3.42	0.20	0.36	-3.60	-5.05e-02	-3.19	1.21
1	20	121	-0.15	-4.82	-0.30	-4.67	0.82	0.16	-6.52	-0.54	-5.83	2.04
1	20	122	5.66e-02	-5.84	-0.20	-5.58	1.21	0.46	-6.74	-0.32	-5.97	2.23
1	20	123	-0.40	-6.06	-0.74	-5.72	1.34	0.43	-6.69	-0.14	-6.12	1.93
1	20	124	-1.06	-6.01	-1.43	-5.63	1.32	0.30	-6.65	-5.93e-02	-6.29	1.54
1	20	125	-1.45	-5.81	-1.82	-5.43	1.22	9.40e-02	-6.47	-0.10	-6.27	1.12
1	20	126	-1.81	-5.52	-2.13	-5.20	1.04	-0.38	-6.45	-0.47	-6.36	0.75
1	20	127	-2.28	-5.00	-2.37	-4.92	0.47	-0.96	-6.30	-1.00	-6.25	0.50
1	20	128	-2.67	-4.58	-2.67	-4.58	-0.12	-1.58	-6.16	-1.60	-6.15	0.23
1	20	129	-2.91	-3.86	-2.91	-3.86	-4.47e-02	-2.63	-6.18	-2.67	-6.14	0.36
1	20	130	-2.65	-3.70	-2.91	-3.44	0.45	-2.25	-4.11	-2.81	-3.55	0.85
1	20	131	-2.45	-4.35	-3.12	-3.68	0.91	-2.01	-7.15	-2.97	-6.19	2.00
1	20	132	-2.84	-4.95	-3.35	-4.44	0.90	-1.09	-7.34	-2.20	-6.23	2.39
1	20	133	-3.04	-4.86	-3.27	-4.64	0.60	-0.43	-7.17	-1.30	-6.29	2.27
1	20	134	-3.17	-4.84	-3.26	-4.75	0.37	-0.17	-7.05	-0.84	-6.38	2.04
1	20	135	-3.18	-4.80	-3.19	-4.79	0.14	6.51e-02	-6.76	-0.40	-6.30	1.72
1	20	136	-3.07	-4.78	-3.08	-4.78	-9.78e-02	0.22	-6.64	-6.80e-02	-6.35	1.37
1	20	137	-2.88	-4.75	-2.92	-4.71	-0.25	7.89e-02	-6.41	-8.57e-02	-6.24	1.02
1	20	138	-2.65	-4.67	-2.73	-4.59	-0.39	-0.33	-6.35	-0.42	-6.26	0.73
1	20	139	-2.33	-4.56	-2.51	-4.38	-0.60	-0.86	-6.17	-0.91	-6.11	0.54
1	20	140	-2.03	-4.40	-2.38	-4.05	-0.84	-1.48	-5.98	-1.49	-5.97	-0.20
1	20	141	-1.73	-3.64	-2.12	-3.25	-0.77	-2.57	-5.96	-2.58	-5.95	0.15
1	20	142	-2.01	-3.23	-2.10	-3.13	-0.32	-2.22	-3.97	-2.76	-3.44	0.81
1	20	143	-2.17	-3.49	-2.18	-3.48	0.13	-1.92	-6.93	-2.89	-5.96	1.98
1	20	144	-1.89	-4.06	-1.92	-4.03	0.25	-1.00	-7.11	-2.13	-5.98	2.37
1	20	145	-1.58	-4.21	-1.58	-4.21	-0.10	-0.31	-6.92	-1.22	-6.02	2.27
1	20	146	-0.76	-4.37	-0.82	-4.31	-0.46	0.14	-6.76	-0.53	-6.09	2.05
1	20	147	-8.52e-02	-4.42	-0.16	-4.34	-0.56	0.16	-6.50	-0.33	-6.00	1.74
1	20	148	-3.89e-02	-4.42	-0.14	-4.32	-0.65	0.33	-6.35	2.00e-02	-6.05	1.40
1	20	149	0.27	-4.38	0.15	-4.26	-0.74	0.20	-6.12	1.46e-02	-5.94	1.07
1	20	150	0.56	-4.29	0.40	-4.13	-0.86	-0.22	-6.06	-0.33	-5.95	0.78
1	20	151	0.73	-4.13	0.51	-3.90	-1.02	-0.72	-5.87	-0.79	-5.80	0.58
1	20	152	1.07	-3.77	0.79	-3.49	-1.13	-1.29	-5.67	-1.29	-5.67	3.84e-02
1	20	153	1.15	-2.99	0.91	-2.74	-0.97	-2.31	-5.69	-2.36	-5.65	0.37
1	20	154	0.65	-2.95	0.57	-2.87	-0.52	-2.02	-3.80	-2.55	-3.26	0.81
1	20	155	0.92	-3.05	0.91	-3.04	-0.16	-1.70	-6.63	-2.67	-5.66	1.96
1	20	156	1.51	-3.48	1.51	-3.48	-4.48e-02	-0.81	-6.79	-1.93	-5.67	2.33
1	20	157	1.79	-3.73	1.79	-3.72	-8.54e-02	-0.15	-6.59	-1.05	-5.69	2.23
1	20	158	2.10	-3.85	2.09	-3.84	-0.29	0.27	-6.42	-0.39	-5.75	2.01
1	20	159	2.40	-3.91	2.36	-3.87	-0.46	0.49	-6.13	2.38e-02	-5.66	1.70
1	20	160	2.67	-3.90	2.64	-3.86	-0.49	0.45	-5.99	0.15	-5.69	1.35
1	20	161	2.94	-3.83	2.90	-3.80	-0.49	0.33	-5.74	0.16	-5.57	1.01
1	20	162	3.18	-3.71	3.14	-3.68	-0.50	0.10	-5.65	1.63e-02	-5.56	0.70
1	20	163	3.35	-3.50	3.31	-3.45	-0.53	-0.35	-5.41	-0.37	-5.40	0.27
1	20	164	3.54	-3.06	3.52	-3.03	-0.40	-0.93	-5.25	-0.94	-5.24	-0.19
1	20	165	3.12	-2.55	3.11	-2.55	-0.10	-1.88	-5.18	-1.88	-5.18	5.67e-02
1	20	166	2.51	-2.74	2.48	-2.71	0.35	-1.83	-3.08	-2.02	-2.89	0.45
1	20	167	3.10	-2.63	2.96	-2.48	0.90	-1.44	-5.64	-2.02	-5.06	1.45
1	20	168	3.45	-3.28	3.17	-3.00	1.34	-0.57	-5.61	-1.20	-4.98	1.66
1	20	169	3.35	-3.70	2.97	-3.31	1.60	0.18	-5.30	-0.21	-4.91	1.42
1	20	170	3.26	-3.87	2.79	-3.40	1.77	0.51	-5.05	0.31	-4.85	1.03
1	20	171	3.13	-3.92	2.55	-3.34	1.94	1.33	-4.70	1.28	-4.65	0.56
1	20	172	2.96	-3.82	2.26	-3.11	2.07	1.62	-4.57	1.61	-4.56	-0.24
1	20	173	2.71	-3.48	1.92	-2.69	2.07	1.79	-4.37	1.75	-4.33	-0.54
1	20	174	2.30	-2.81	1.50	-2.01	1.86	1.86	-4.28	1.70	-4.12	-0.98
1	20	175	1.47	-1.84	0.71	-1.08	1.40	1.42	-4.24	1.18	-4.00	-1.14
1	20	176	0.99	-0.64	0.27	7.63e-02	0.81	1.23	-2.46	0.87	-2.10	-1.10
1	20	177	0.55	-1.24	0.39	-1.08	0.51	0.26	-3.96	0.18	-3.89	-0.55
1	20	178	0.25	-5.02	0.25	-5.02	-0.12	-0.22	-12.39	-0.26	-12.36	0.61
1	20	179	4.24e-02	-7.52	4.41e-03	-7.48	0.53	-0.55	-12.45	-0.72	-12.28	1.39
1	20	180	0.20	-8.65	-8.61e-02	-8.37	1.57	-1.23	-12.63	-1.51	-12.35	1.75
1	20	181	-0.12	-8.92	-0.62	-8.43	2.02	-1.57	-12.87	-1.87	-12.56	1.84
1	20	182	-0.69	-9.01	-1.25	-8.45	2.08	-1.71	-13.25	-1.97	-12.98	1.73
1	20	183	-1.15	-8.75	-1.70	-8.20	1.98	-1.78	-13.11	-1.96	-12.93	1.43
1	20	184	-1.60	-8.43	-2.10	-7.93	1.78	-1.95	-13.29	-2.06	-13.19	1.11
1	20	185	-2.00	-7.98	-2.42	-7.56	1.52	-2.12	-13.04	-2.18	-12.98	0.82
1	20	186	-2.45	-7.48	-2.72	-7.22	1.13	-2.47	-13.13	-2.51	-13.08	0.66
1	20	187	-2.84	-6.83	-2.94	-6.73	0.61	-2.90	-12.79	-2.95	-12.74	0.68
1	20	188	-3.01	-6.49	-3.08	-6.42	0.49	-3.27	-12.57	-3.35	-12.50	0.82
1	20	189	-3.04	-6.73	-3.26	-6.52	0.87	-3.39	-12.38	-3.54	-12.23	1.15
1	20	190	-2.89	-6.71	-3.26	-6.33	1.14	-3.34	-12.68	-3.60	-12.42	1.54
1	20	191	-2.98	-6.79	-3.27	-6.50	1.02	-2.85	-12.99	-3.23	-12.61	1.91
1	20	192	-3.10	-6.95	-3.25	-6.81	0.73	-2.33	-13.34	-2.72	-12.95	2.03
1	20	193	-3.09	-6.99	-3.15	-6.93	0.48	-1.92	-13.17	-2.25	-12.84	1.90
1	20	194	-3.07	-7.03	-3.07	-7.02	0.19	-1.78	-13.29	-2.02	-13.04	1.66
1	20	195	-2.98	-6.98	-2.98	-6.98	-0.12	-1.70	-13.00	-1.87	-12.83	1.37

1	20	196	-2.87	-6.94	-2.89	-6.92	-0.30	-1.81	-13.06	-1.92	-12.96	1.09
1	20	197	-2.75	-6.78	-2.80	-6.73	-0.44	-1.96	-12.73	-2.02	-12.66	0.84
1	20	198	-2.65	-6.59	-2.75	-6.49	-0.62	-2.30	-12.75	-2.34	-12.70	0.71
1	20	199	-2.50	-6.25	-2.68	-6.08	-0.80	-2.73	-12.38	-2.79	-12.32	0.72
1	20	200	-2.42	-6.03	-2.60	-5.85	-0.79	-3.11	-12.12	-3.19	-12.04	0.84
1	20	201	-2.49	-6.03	-2.54	-5.98	-0.41	-3.24	-11.90	-3.40	-11.74	1.16
1	20	202	-2.35	-5.87	-2.35	-5.86	6.38e-02	-3.19	-12.17	-3.46	-11.90	1.55
1	20	203	-2.20	-5.97	-2.20	-5.97	3.58e-02	-2.69	-12.46	-3.08	-12.07	1.92
1	20	204	-1.97	-6.25	-2.00	-6.22	-0.36	-2.15	-12.79	-2.56	-12.38	2.05
1	20	205	-1.66	-6.40	-1.74	-6.31	-0.62	-1.73	-12.60	-2.08	-12.25	1.92
1	20	206	-1.41	-6.50	-1.52	-6.39	-0.73	-1.58	-12.70	-1.85	-12.43	1.69
1	20	207	-1.16	-6.48	-1.30	-6.34	-0.83	-1.50	-12.40	-1.68	-12.22	1.41
1	20	208	-0.93	-6.44	-1.09	-6.28	-0.93	-1.59	-12.45	-1.71	-12.33	1.13
1	20	209	-0.70	-6.28	-0.90	-6.08	-1.04	-1.73	-12.12	-1.81	-12.04	0.89
1	20	210	-0.53	-6.09	-0.78	-5.84	-1.14	-2.05	-12.12	-2.11	-12.06	0.75
1	20	211	-0.36	-5.73	-0.66	-5.44	-1.22	-2.47	-11.76	-2.53	-11.70	0.75
1	20	212	-0.13	-5.64	-0.39	-5.39	-1.16	-2.84	-11.51	-2.93	-11.43	0.86
1	20	213	-4.80e-02	-5.52	-0.16	-5.40	-0.77	-2.97	-11.30	-3.14	-11.13	1.17
1	20	214	-4.17e-02	-5.44	-5.79e-02	-5.42	-0.30	-2.92	-11.57	-3.20	-11.28	1.54
1	20	215	0.18	-5.36	0.17	-5.34	-0.26	-2.43	-11.84	-2.83	-11.44	1.90
1	20	216	0.37	-5.59	0.34	-5.56	-0.41	-1.90	-12.15	-2.32	-11.73	2.02
1	20	217	0.73	-5.71	0.69	-5.67	-0.53	-1.50	-11.96	-1.85	-11.60	1.89
1	20	218	0.96	-5.81	0.90	-5.75	-0.63	-1.36	-12.03	-1.62	-11.77	1.66
1	20	219	1.15	-5.77	1.10	-5.71	-0.62	-1.27	-11.73	-1.45	-11.55	1.37
1	20	220	1.30	-5.70	1.25	-5.65	-0.59	-1.36	-11.76	-1.47	-11.64	1.08
1	20	221	1.41	-5.52	1.36	-5.48	-0.55	-1.47	-11.42	-1.54	-11.35	0.83
1	20	222	1.42	-5.30	1.38	-5.26	-0.47	-1.75	-11.39	-1.80	-11.34	0.66
1	20	223	1.39	-4.96	1.38	-4.95	-0.27	-2.13	-11.00	-2.17	-10.96	0.63
1	20	224	1.37	-5.08	1.37	-5.08	1.37e-02	-2.45	-10.70	-2.51	-10.65	0.67
1	20	225	1.48	-5.07	1.42	-5.01	0.61	-2.56	-10.39	-2.66	-10.29	0.88
1	20	226	1.62	-5.32	1.39	-5.09	1.23	-2.49	-10.50	-2.65	-10.33	1.13
1	20	227	1.82	-5.25	1.46	-4.89	1.56	-1.98	-10.58	-2.20	-10.36	1.36
1	20	228	1.99	-5.57	1.51	-5.09	1.84	-1.42	-10.68	-1.61	-10.49	1.33
1	20	229	2.18	-5.73	1.58	-5.13	2.09	-0.95	-10.31	-1.07	-10.19	1.04
1	20	230	2.30	-5.77	1.56	-5.03	2.33	-0.80	-10.20	-0.84	-10.15	0.65
1	20	231	2.38	-5.56	1.48	-4.66	2.52	-0.37	-9.74	-0.38	-9.74	-9.48e-02
1	20	232	2.37	-5.08	1.31	-4.03	2.60	7.26e-02	-9.61	5.86e-02	-9.60	-0.37
1	20	233	2.24	-4.20	1.07	-3.03	2.48	0.22	-9.17	0.17	-9.13	-0.62
1	20	234	1.98	-3.10	0.78	-1.90	2.16	0.32	-8.84	0.25	-8.77	-0.76
1	20	235	1.26	-2.24	0.37	-1.35	1.52	0.27	-8.47	0.22	-8.42	-0.61
1	20	236	1.60	-0.63	0.22	0.75	1.08	0.14	-8.26	0.14	-8.26	1.19e-02
1	20	237	3.11	-4.30	2.87	-4.06	-1.31	-1.06	-21.74	-1.25	-21.55	2.00
1	20	238	0.18	-16.24	5.01e-02	-16.11	1.47	-1.94	-21.46	-2.07	-21.32	1.64
1	20	239	1.36	-8.63	0.53	-7.80	2.75	-3.07	-21.72	-3.23	-21.56	1.70
1	20	240	-1.49	-15.32	-2.09	-14.72	2.82	-3.39	-21.42	-3.57	-21.25	1.77
1	20	241	-0.24	-8.70	-1.25	-7.68	2.75	-3.82	-21.93	-3.96	-21.79	1.59
1	20	242	-2.47	-14.59	-3.02	-14.04	2.52	-3.93	-21.68	-4.04	-21.57	1.38
1	20	243	-1.13	-7.89	-1.99	-7.03	2.24	-4.10	-22.03	-4.17	-21.96	1.12
1	20	244	-3.19	-13.55	-3.56	-13.19	1.90	-4.11	-21.58	-4.17	-21.53	0.96
1	20	245	-1.88	-6.90	-2.45	-6.32	1.60	-4.29	-21.75	-4.33	-21.71	0.83
1	20	246	-3.85	-12.47	-4.04	-12.28	1.27	-4.37	-21.23	-4.41	-21.19	0.86
1	20	247	-2.41	-5.75	-2.65	-5.50	0.86	-4.78	-21.57	-4.85	-21.50	1.10
1	20	248	-3.94	-13.60	-4.07	-13.47	1.14	-4.99	-21.35	-5.08	-21.25	1.25
1	20	249	-2.08	-6.02	-2.71	-5.39	1.44	-4.79	-21.42	-4.91	-21.31	1.38
1	20	250	-4.01	-12.02	-4.14	-11.89	1.03	-4.31	-21.09	-4.50	-20.90	1.77
1	20	251	-2.50	-6.06	-2.67	-5.89	0.75	-4.16	-21.54	-4.36	-21.34	1.86
1	20	252	-3.80	-12.34	-3.83	-12.31	0.53	-3.91	-21.30	-4.11	-21.11	1.82
1	20	253	-2.47	-6.10	-2.49	-6.08	0.23	-3.87	-21.65	-4.02	-21.50	1.63
1	20	254	-3.69	-12.39	-3.69	-12.39	-8.54e-02	-3.75	-21.25	-3.87	-21.13	1.44
1	20	255	-2.36	-6.01	-2.38	-5.99	-0.26	-3.85	-21.46	-3.93	-21.38	1.19
1	20	256	-3.58	-12.08	-3.60	-12.06	-0.40	-3.86	-20.94	-3.92	-20.87	1.04
1	20	257	-2.28	-5.69	-2.36	-5.61	-0.51	-4.05	-21.03	-4.10	-20.99	0.90
1	20	258	-3.64	-11.43	-3.70	-11.38	-0.66	-4.13	-20.47	-4.19	-20.42	0.93
1	20	259	-1.99	-5.22	-2.25	-4.96	-0.88	-4.54	-20.75	-4.63	-20.67	1.14
1	20	260	-3.46	-12.62	-3.47	-12.60	-0.39	-4.75	-20.49	-4.85	-20.39	1.29
1	20	261	-2.08	-4.93	-2.09	-4.93	8.47e-02	-4.56	-20.52	-4.68	-20.40	1.42
1	20	262	-3.32	-11.08	-3.33	-11.06	-0.32	-4.07	-20.18	-4.28	-19.98	1.81
1	20	263	-1.78	-5.43	-1.88	-5.33	-0.58	-3.90	-20.59	-4.12	-20.38	1.90
1	20	264	-2.82	-11.44	-2.87	-11.38	-0.69	-3.64	-20.35	-3.86	-20.14	1.86
1	20	265	-1.40	-5.63	-1.55	-5.47	-0.81	-3.58	-20.66	-3.75	-20.49	1.68
1	20	266	-2.49	-11.51	-2.58	-11.42	-0.90	-3.46	-20.26	-3.59	-20.13	1.49
1	20	267	-1.10	-5.59	-1.32	-5.36	-0.98	-3.54	-20.44	-3.63	-20.35	1.24
1	20	268	-2.24	-11.21	-2.37	-11.08	-1.07	-3.55	-19.93	-3.62	-19.85	1.09
1	20	269	-0.90	-5.29	-1.19	-4.99	-1.10	-3.73	-20.00	-3.78	-19.95	0.95
1	20	270	-2.21	-10.61	-2.36	-10.45	-1.14	-3.81	-19.46	-3.87	-19.40	0.97
1	20	271	-0.38	-4.85	-0.78	-4.46	-1.27	-4.21	-19.71	-4.30	-19.63	1.16
1	20	272	-1.99	-11.76	-2.06	-11.69	-0.85	-4.40	-19.46	-4.52	-19.35	1.30
1	20	273	-0.59	-4.48	-0.62	-4.45	-0.35	-4.22	-19.49	-4.36	-19.35	1.42
1	20	274	-1.84	-10.18	-1.88	-10.14	-0.55	-3.76	-19.17	-3.97	-18.95	1.79

1	20	275	-0.33	-4.84	-0.44	-4.73	-0.70	-3.59	-19.56	-3.81	-19.33	1.88
1	20	276	-1.37	-10.48	-1.43	-10.42	-0.70	-3.34	-19.32	-3.55	-19.10	1.84
1	20	277	8.11e-02	-4.96	-1.46e-02	-4.87	-0.69	-3.28	-19.60	-3.45	-19.44	1.65
1	20	278	-1.13	-10.54	-1.17	-10.49	-0.65	-3.16	-19.22	-3.29	-19.09	1.45
1	20	279	0.21	-4.86	0.14	-4.79	-0.58	-3.24	-19.38	-3.33	-19.29	1.20
1	20	280	-1.02	-10.24	-1.05	-10.21	-0.50	-3.24	-18.87	-3.31	-18.80	1.03
1	20	281	0.19	-4.52	0.17	-4.50	-0.30	-3.40	-18.92	-3.45	-18.87	0.87
1	20	282	-1.10	-9.73	-1.10	-9.73	-7.60e-02	-3.47	-18.36	-3.52	-18.31	0.86
1	20	283	0.24	-4.17	0.24	-4.17	6.92e-03	-3.83	-18.54	-3.89	-18.47	1.00
1	20	284	-0.98	-11.11	-1.02	-11.06	0.68	-3.99	-18.20	-4.07	-18.12	1.07
1	20	285	0.88	-4.56	0.49	-4.17	1.41	-3.78	-18.11	-3.87	-18.02	1.11
1	20	286	-0.65	-9.80	-0.92	-9.54	1.53	-3.31	-17.63	-3.44	-17.50	1.37
1	20	287	1.14	-4.98	0.54	-4.38	1.82	-3.08	-17.80	-3.20	-17.68	1.34
1	20	288	-1.36e-02	-10.11	-0.49	-9.64	2.14	-2.74	-17.33	-2.83	-17.23	1.17
1	20	289	1.92	-5.19	0.96	-4.23	2.44	-2.51	-17.32	-2.55	-17.27	0.83
1	20	290	0.66	-9.66	-9.14e-02	-8.92	2.67	-2.13	-16.63	-2.14	-16.61	0.40
1	20	291	2.44	-4.66	1.00	-3.22	2.85	-1.80	-16.44	-1.80	-16.44	-0.11
1	20	292	0.90	-7.57	-0.12	-6.56	2.75	-1.34	-15.67	-1.36	-15.66	-0.39
1	20	293	3.13	-1.69	1.06	0.39	2.38	-1.18	-15.52	-1.19	-15.50	-0.45
1	20	294	0.85	-4.33	0.29	-3.77	1.61	-0.75	-14.92	-0.76	-14.91	-0.45
1	20	295	7.21	1.00	1.98	6.23	2.26	-0.35	-14.77	-0.38	-14.74	-0.68
1	20	296	3.88	-4.02	2.49	-2.63	-3.01	-4.20	-27.23	-4.37	-27.06	1.97
1	20	297	-1.15	-18.79	-1.75	-18.18	3.21	-4.89	-30.66	-5.02	-30.53	1.78
1	20	298	3.47	-4.34	0.40	-1.26	3.82	-4.28	-27.93	-4.45	-27.77	1.98
1	20	299	-4.93	-28.11	-5.43	-27.61	3.37	-5.34	-30.37	-5.48	-30.22	1.92
1	20	300	4.25	-2.36	-2.11e-02	1.91	3.16	-5.41	-28.14	-5.50	-28.05	1.43
1	20	301	-5.80	-27.71	-6.17	-27.35	2.80	-5.99	-30.65	-6.10	-30.55	1.61
1	20	302	4.15	-1.72	-0.34	2.78	2.49	-5.58	-28.17	-5.63	-28.12	1.08
1	20	303	-6.09	-26.38	-6.30	-26.16	2.06	-6.03	-30.41	-6.11	-30.34	1.37
1	20	304	3.85	-1.25	-0.52	3.11	1.79	-5.59	-27.77	-5.63	-27.73	0.87
1	20	305	-5.96	-24.31	-6.07	-24.20	1.41	-5.92	-29.88	-6.00	-29.81	1.33
1	20	306	1.65	-1.29	-0.96	1.33	0.92	-5.70	-27.40	-5.72	-27.39	0.60
1	20	307	-4.28	-14.84	-4.47	-14.65	1.38	-6.56	-30.49	-6.67	-30.38	1.61
1	20	308	2.26	-1.90	-1.06	1.42	1.67	-5.66	-27.32	-5.78	-27.19	1.65
1	20	309	-5.89	-23.60	-5.94	-23.55	0.96	-5.78	-29.53	-5.95	-29.37	1.97
1	20	310	3.47	-0.52	-0.39	3.33	0.72	-5.42	-27.31	-5.54	-27.19	1.67
1	20	311	-6.00	-24.85	-6.02	-24.83	0.52	-5.77	-29.79	-5.94	-29.62	2.01
1	20	312	3.44	-0.28	-0.26	3.42	0.26	-5.31	-27.49	-5.41	-27.39	1.50
1	20	313	-5.97	-25.01	-5.97	-25.01	1.50e-02	-5.70	-29.81	-5.83	-29.68	1.78
1	20	314	3.46	-0.22	-0.21	3.45	-0.14	-5.27	-27.32	-5.34	-27.25	1.20
1	20	315	-5.87	-24.49	-5.87	-24.48	-0.32	-5.70	-29.42	-5.80	-29.32	1.52
1	20	316	3.47	-0.28	-0.24	3.43	-0.38	-5.31	-26.80	-5.35	-26.76	0.97
1	20	317	-5.54	-22.83	-5.56	-22.81	-0.56	-5.63	-28.78	-5.72	-28.69	1.44
1	20	318	1.84	-0.77	-0.47	1.54	-0.83	-5.41	-26.35	-5.45	-26.31	0.86
1	20	319	-3.99	-13.70	-3.99	-13.70	-0.19	-6.24	-29.26	-6.36	-29.13	1.69
1	20	320	1.59	-0.44	-0.43	1.57	0.17	-5.37	-26.17	-5.51	-26.03	1.69
1	20	321	-5.35	-22.16	-5.36	-22.15	-0.45	-5.47	-28.25	-5.65	-28.07	2.05
1	20	322	3.52	-0.14	-5.73e-02	3.44	-0.56	-5.11	-26.10	-5.25	-25.96	1.72
1	20	323	-5.38	-23.29	-5.40	-23.27	-0.65	-5.41	-28.44	-5.61	-28.25	2.09
1	20	324	3.71	-9.45e-02	7.09e-02	3.55	-0.78	-4.97	-26.22	-5.08	-26.11	1.55
1	20	325	-5.29	-23.42	-5.33	-23.38	-0.88	-5.32	-28.42	-5.47	-28.27	1.85
1	20	326	3.83	-0.10	0.13	3.59	-0.93	-4.92	-26.02	-4.99	-25.94	1.26
1	20	327	-5.14	-22.92	-5.20	-22.86	-1.03	-5.31	-28.00	-5.42	-27.89	1.58
1	20	328	3.83	-0.14	0.12	3.56	-1.00	-4.94	-25.49	-4.99	-25.44	1.02
1	20	329	-4.79	-21.36	-4.86	-21.29	-1.07	-5.24	-27.36	-5.34	-27.26	1.48
1	20	330	2.31	-0.79	-0.18	1.70	-1.24	-5.05	-25.03	-5.09	-24.99	0.90
1	20	331	-3.32	-12.70	-3.36	-12.66	-0.61	-5.83	-27.80	-5.96	-27.67	1.71
1	20	332	1.74	-0.17	-0.15	1.72	-0.20	-5.01	-24.86	-5.15	-24.71	1.68
1	20	333	-4.60	-20.66	-4.63	-20.63	-0.68	-5.08	-26.83	-5.27	-26.64	2.03
1	20	334	3.69	0.19	0.33	3.55	-0.69	-4.74	-24.79	-4.89	-24.64	1.70
1	20	335	-4.64	-21.72	-4.67	-21.70	-0.66	-5.03	-27.02	-5.23	-26.82	2.06
1	20	336	3.78	0.33	0.46	3.66	-0.64	-4.62	-24.91	-4.73	-24.79	1.52
1	20	337	-4.57	-21.87	-4.59	-21.85	-0.59	-4.95	-26.99	-5.10	-26.85	1.81
1	20	338	3.75	0.45	0.52	3.67	-0.49	-4.57	-24.71	-4.65	-24.63	1.22
1	20	339	-4.46	-21.43	-4.48	-21.42	-0.41	-4.95	-26.58	-5.05	-26.48	1.51
1	20	340	3.58	0.51	0.52	3.57	-0.17	-4.59	-24.18	-4.64	-24.13	0.96
1	20	341	-4.13	-20.06	-4.13	-20.06	-1.92e-02	-4.87	-25.92	-4.96	-25.83	1.38
1	20	342	1.66	0.20	0.20	1.66	4.32e-03	-4.68	-23.66	-4.71	-23.62	0.80
1	20	343	-2.53	-12.08	-2.61	-12.01	0.86	-5.41	-26.20	-5.53	-26.09	1.53
1	20	344	2.63	-0.77	0.27	1.59	1.57	-4.61	-23.30	-4.73	-23.18	1.45
1	20	345	-3.58	-19.68	-3.70	-19.55	1.40	-4.65	-25.00	-4.80	-24.86	1.73
1	20	346	4.24	0.15	1.09	3.30	1.72	-4.28	-22.88	-4.37	-22.78	1.34
1	20	347	-3.26	-20.49	-3.51	-20.24	2.05	-4.47	-24.69	-4.60	-24.57	1.58
1	20	348	5.10	-0.16	1.34	3.59	2.38	-3.92	-22.41	-3.97	-22.36	0.96
1	20	349	-2.73	-19.58	-3.15	-19.16	2.61	-3.99	-23.88	-4.05	-23.82	1.09
1	20	350	6.09	-0.35	1.48	4.26	2.90	-3.21	-21.33	-3.21	-21.33	9.55e-02
1	20	351	-2.12	-15.67	-2.68	-15.11	2.70	-2.92	-22.39	-2.93	-22.38	0.49
1	20	352	4.59	-0.64	0.95	3.00	2.41	-2.07	-20.00	-2.08	-20.00	-0.39
1	20	353	-0.65	-4.95	-0.94	-4.66	1.07	-2.68	-21.40	-2.68	-21.39	0.18

1	20	354	11.85	0.24	1.58	10.52	3.70	-2.72	-18.87	-2.74	-18.86	-0.49
1	20	355	3.58	-6.22	1.51	-4.15	-4.00	-3.99	-25.44	-4.00	-25.43	0.53
1	20	356	2.24	-5.96	0.28	-4.01	3.50	-4.59	-29.21	-4.71	-29.09	1.73
1	20	357	4.31	-3.08	0.71	0.51	3.69	-3.98	-26.61	-4.17	-26.42	2.03
1	20	358	-2.07	-15.40	-2.92	-14.54	3.26	-5.31	-29.86	-5.45	-29.72	1.87
1	20	359	5.37	-1.30	0.38	3.69	2.90	-5.19	-27.00	-5.28	-26.91	1.39
1	20	360	-3.03	-14.82	-3.57	-14.28	2.48	-5.91	-30.15	-6.02	-30.05	1.61
1	20	361	5.04	-0.81	0.13	4.10	2.15	-5.35	-26.98	-5.41	-26.92	1.12
1	20	362	-3.38	-13.65	-3.66	-13.37	1.68	-5.93	-29.87	-6.01	-29.78	1.42
1	20	363	4.44	-0.49	-3.54e-02	3.99	1.42	-5.34	-26.57	-5.38	-26.53	0.95
1	20	364	-3.34	-11.95	-3.44	-11.85	0.92	-5.82	-29.28	-5.90	-29.20	1.39
1	20	365	1.72	-0.70	-0.57	1.59	0.54	-5.42	-26.09	-5.45	-26.07	0.75
1	20	366	-7.44e-02	-2.26	-1.82	-0.51	0.88	-6.19	-29.23	-6.31	-29.12	1.61
1	20	367	2.03	-1.28	-0.86	1.62	1.09	-5.36	-26.03	-5.51	-25.88	1.76
1	20	368	-3.20	-11.50	-3.24	-11.46	0.54	-5.69	-28.93	-5.86	-28.77	1.94
1	20	369	4.00	5.75e-02	7.10e-02	3.98	0.23	-5.16	-26.11	-5.29	-25.98	1.62
1	20	370	-3.38	-12.49	-3.38	-12.49	5.40e-02	-5.67	-29.21	-5.84	-29.04	1.97
1	20	371	4.20	0.17	0.18	4.19	-0.19	-5.08	-26.27	-5.18	-26.17	1.48
1	20	372	-3.31	-12.63	-3.33	-12.61	-0.38	-5.60	-29.24	-5.74	-29.10	1.79
1	20	373	4.25	0.14	0.21	4.19	-0.52	-5.04	-26.12	-5.11	-26.04	1.25
1	20	374	-3.19	-12.33	-3.25	-12.27	-0.73	-5.60	-28.86	-5.71	-28.75	1.58
1	20	375	4.12	1.52e-02	0.16	3.97	-0.77	-5.06	-25.63	-5.11	-25.57	1.06
1	20	376	-2.85	-11.14	-2.98	-11.01	-1.04	-5.53	-28.20	-5.63	-28.10	1.51
1	20	377	2.24	-0.68	-4.42e-02	1.60	-1.21	-5.16	-25.08	-5.20	-25.04	0.85
1	20	378	0.24	-1.45	-1.03	-0.18	-0.72	-5.88	-28.05	-6.02	-27.92	1.70
1	20	379	1.67	-0.47	-0.39	1.59	-0.39	-5.08	-24.94	-5.25	-24.78	1.81
1	20	380	-2.68	-10.68	-2.77	-10.60	-0.82	-5.38	-27.68	-5.56	-27.50	2.02
1	20	381	4.14	0.30	0.58	3.86	-1.00	-4.86	-24.95	-5.00	-24.81	1.68
1	20	382	-2.75	-11.63	-2.89	-11.50	-1.08	-5.32	-27.89	-5.51	-27.70	2.06
1	20	383	4.44	0.30	0.69	4.05	-1.21	-4.75	-25.06	-4.87	-24.94	1.54
1	20	384	-2.64	-11.75	-2.83	-11.56	-1.31	-5.22	-27.87	-5.38	-27.72	1.87
1	20	385	4.52	0.25	0.73	4.04	-1.35	-4.69	-24.87	-4.78	-24.79	1.31
1	20	386	-2.51	-11.46	-2.75	-11.22	-1.46	-5.21	-27.47	-5.34	-27.35	1.64
1	20	387	4.35	0.16	0.70	3.81	-1.40	-4.70	-24.37	-4.77	-24.31	1.11
1	20	388	-2.17	-10.36	-2.49	-10.04	-1.57	-5.14	-26.81	-5.25	-26.70	1.56
1	20	389	4.97	-0.15	0.43	4.39	-1.63	-4.81	-23.83	-4.85	-23.79	0.89
1	20	390	0.97	-1.43	-0.69	0.24	-1.11	-5.49	-26.66	-5.64	-26.52	1.72
1	20	391	4.48	-0.23	-0.12	4.37	-0.73	-4.73	-23.70	-4.90	-23.53	1.79
1	20	392	-2.14	-9.77	-2.29	-9.63	-1.05	-5.00	-26.30	-5.19	-26.11	2.01
1	20	393	5.36	0.53	0.80	5.09	-1.12	-4.51	-23.70	-4.66	-23.56	1.66
1	20	394	-2.27	-10.62	-2.41	-10.48	-1.07	-4.95	-26.50	-5.14	-26.31	2.03
1	20	395	5.49	0.66	0.90	5.25	-1.06	-4.41	-23.82	-4.53	-23.70	1.51
1	20	396	-2.25	-10.70	-2.37	-10.58	-1.01	-4.86	-26.49	-5.02	-26.34	1.82
1	20	397	6.67	0.79	0.93	6.54	-0.89	-4.37	-23.64	-4.45	-23.56	1.27
1	20	398	-2.23	-10.40	-2.31	-10.32	-0.82	-4.86	-26.11	-4.98	-25.99	1.58
1	20	399	6.41	0.83	0.89	6.35	-0.57	-4.37	-23.15	-4.43	-23.09	1.05
1	20	400	-1.99	-9.36	-2.03	-9.32	-0.55	-4.79	-25.44	-4.89	-25.34	1.46
1	20	401	4.26	0.87	0.91	4.21	-0.40	-4.46	-22.56	-4.50	-22.53	0.80
1	20	402	0.43	-0.47	-0.33	0.28	0.33	-5.11	-25.18	-5.23	-25.06	1.56
1	20	403	4.31	0.37	0.61	4.06	0.96	-4.37	-22.27	-4.51	-22.13	1.59
1	20	404	-1.55	-9.27	-1.67	-9.16	0.93	-4.59	-24.60	-4.75	-24.45	1.75
1	20	405	6.24	1.17	1.47	5.94	1.18	-4.09	-21.98	-4.19	-21.88	1.36
1	20	406	-1.28	-10.05	-1.55	-9.78	1.51	-4.42	-24.36	-4.56	-24.22	1.62
1	20	407	6.90	1.04	1.71	6.22	1.88	-3.77	-21.55	-3.83	-21.49	1.05
1	20	408	-0.70	-9.46	-1.24	-8.91	2.11	-3.95	-23.58	-4.03	-23.51	1.21
1	20	409	7.97	0.74	1.77	6.95	2.52	-3.06	-20.51	-3.08	-20.49	0.56
1	20	410	1.69e-02	-6.43	-0.90	-5.52	2.25	-2.89	-22.04	-2.91	-22.02	0.73
1	20	411	8.44	0.55	1.21	7.78	2.18	-1.92	-19.07	-1.92	-19.06	-0.38
1	20	412	5.82	0.46	0.51	5.76	0.54	-2.46	-20.47	-2.47	-20.47	0.35
1	20	413	12.71	-0.68	0.57	11.47	3.89	-2.70	-17.91	-2.71	-17.90	0.43
1	20	414	0.53	-7.64	-2.52	-4.59	-3.96	0.53	-16.23	0.53	-16.23	0.26
1	20	415	9.83	-0.53	-0.30	9.61	1.51	-0.58	-16.38	-0.70	-16.27	1.35
1	20	416	2.75	-2.37	-1.29	1.67	2.09	-2.20	-17.31	-2.37	-17.14	1.59
1	20	417	12.33	0.51	0.82	12.03	1.89	-3.20	-17.74	-3.36	-17.58	1.51
1	20	418	3.23	-1.32	-0.78	2.70	1.46	-3.51	-17.99	-3.65	-17.86	1.41
1	20	419	13.29	1.03	1.13	13.19	1.06	-3.56	-17.94	-3.69	-17.82	1.34
1	20	420	3.14	-0.77	-0.59	2.97	0.80	-3.57	-17.97	-3.70	-17.85	1.32
1	20	421	13.62	1.30	1.31	13.62	0.27	-3.53	-17.76	-3.65	-17.64	1.28
1	20	422	2.94	-0.47	-0.47	2.94	-1.41e-02	-3.52	-17.67	-3.63	-17.55	1.28
1	20	423	13.59	1.44	1.46	13.57	-0.50	-3.53	-17.37	-3.64	-17.27	1.23
1	20	424	2.96	-0.66	-0.47	2.76	-0.82	-3.40	-17.20	-3.52	-17.08	1.26
1	20	425	14.15	1.48	1.52	14.10	-0.76	-3.14	-16.75	-3.28	-16.61	1.40
1	20	426	2.82	-0.14	-1.35e-02	2.69	-0.60	-3.30	-17.13	-3.49	-16.94	1.60
1	20	427	13.54	1.68	1.75	13.47	-0.89	-3.40	-17.19	-3.60	-17.00	1.62
1	20	428	3.39	-8.56e-02	0.44	2.87	-1.25	-3.36	-17.37	-3.55	-17.18	1.61
1	20	429	13.81	1.63	1.81	13.64	-1.43	-3.34	-17.37	-3.52	-17.18	1.59
1	20	430	3.78	-0.38	0.46	2.95	-1.67	-3.34	-17.49	-3.51	-17.32	1.56
1	20	431	13.94	1.53	1.81	13.66	-1.84	-3.31	-17.39	-3.47	-17.22	1.51
1	20	432	4.05	-0.63	0.47	2.95	-1.99	-3.31	-17.39	-3.47	-17.23	1.48

1	20	433	13.96	1.39	1.77	13.58	-2.17	-3.30	-17.16	-3.44	-17.02	1.42
1	20	434	4.20	-0.85	0.50	2.86	-2.23	-3.30	-17.06	-3.45	-16.91	1.41
1	20	435	13.83	1.21	1.72	13.32	-2.49	-3.33	-16.75	-3.46	-16.61	1.35
1	20	436	4.38	-1.31	0.39	2.68	-2.61	-3.21	-16.56	-3.35	-16.41	1.37
1	20	437	14.21	1.63	2.10	13.74	-2.40	-2.95	-16.10	-3.12	-15.93	1.50
1	20	438	3.93	-0.78	0.53	2.61	-2.11	-3.09	-16.44	-3.31	-16.22	1.69
1	20	439	13.54	1.24	1.68	13.11	-2.27	-3.18	-16.48	-3.40	-16.25	1.71
1	20	440	4.41	-1.09	0.51	2.80	-2.50	-3.13	-16.63	-3.35	-16.41	1.69
1	20	441	13.82	1.08	1.63	13.28	-2.58	-3.09	-16.61	-3.31	-16.40	1.67
1	20	442	4.64	-1.28	0.47	2.89	-2.71	-3.08	-16.71	-3.28	-16.51	1.64
1	20	443	13.94	0.93	1.56	13.31	-2.78	-3.05	-16.60	-3.23	-16.41	1.58
1	20	444	4.74	-1.41	0.44	2.89	-2.82	-3.05	-16.59	-3.23	-16.41	1.54
1	20	445	13.91	0.79	1.46	13.23	-2.90	-3.03	-16.36	-3.20	-16.19	1.48
1	20	446	4.72	-1.47	0.44	2.81	-2.86	-3.04	-16.25	-3.20	-16.08	1.45
1	20	447	13.69	0.65	1.38	12.96	-2.99	-3.05	-15.94	-3.21	-15.79	1.38
1	20	448	5.59	-1.90	-0.39	4.08	-3.00	-2.96	-15.75	-3.11	-15.60	1.39
1	20	449	13.95	0.65	1.25	13.34	-2.76	-2.71	-15.32	-2.90	-15.14	1.51
1	20	450	5.11	-1.40	-0.33	4.05	-2.41	-2.85	-15.64	-3.07	-15.41	1.69
1	20	451	13.25	0.78	1.29	12.74	-2.47	-2.92	-15.67	-3.15	-15.44	1.70
1	20	452	5.43	-0.95	0.36	4.12	-2.58	-2.88	-15.80	-3.10	-15.58	1.67
1	20	453	13.44	0.68	1.21	12.91	-2.55	-2.85	-15.79	-3.06	-15.58	1.65
1	20	454	5.28	-1.57	-0.46	4.16	-2.53	-2.84	-15.89	-3.04	-15.69	1.61
1	20	455	13.43	0.64	1.14	12.93	-2.47	-2.81	-15.79	-3.00	-15.60	1.54
1	20	456	5.13	-1.48	-0.51	4.15	-2.35	-2.82	-15.78	-3.00	-15.60	1.49
1	20	457	13.22	0.64	1.07	12.80	-2.27	-2.80	-15.56	-2.96	-15.40	1.42
1	20	458	4.85	-1.31	-0.52	4.07	-2.05	-2.81	-15.44	-2.97	-15.29	1.39
1	20	459	12.78	0.69	1.04	12.43	-2.03	-2.84	-15.14	-2.98	-15.00	1.31
1	20	460	4.52	-1.51	-0.88	3.89	-1.84	-2.75	-14.94	-2.89	-14.80	1.31
1	20	461	12.79	0.88	1.04	12.63	-1.38	-2.51	-14.49	-2.68	-14.33	1.40
1	20	462	3.94	-0.50	-0.36	3.79	-0.79	-2.63	-14.74	-2.84	-14.53	1.55
1	20	463	11.94	1.25	1.28	11.91	-0.59	-2.69	-14.69	-2.89	-14.49	1.54
1	20	464	3.86	0.29	0.33	3.82	-0.39	-2.64	-14.72	-2.82	-14.53	1.50
1	20	465	12.01	1.49	1.49	12.01	-6.23e-02	-2.56	-14.57	-2.73	-14.40	1.43
1	20	466	3.98	0.39	0.42	3.95	0.32	-2.47	-14.46	-2.63	-14.31	1.35
1	20	467	12.40	1.61	1.66	12.35	0.76	-2.25	-14.10	-2.38	-13.98	1.21
1	20	468	6.25	0.13	0.39	5.99	1.24	-1.93	-13.72	-2.03	-13.62	1.09
1	20	469	13.62	1.30	1.42	13.50	1.20	-1.47	-13.10	-1.53	-13.04	0.85
1	20	470	8.81	-0.99	-0.72	8.54	1.62	-0.77	-12.47	-0.80	-12.44	0.58
1	20	471	17.32	3.27e-02	4.27e-02	17.31	0.42	0.24	-11.67	0.22	-11.66	0.41
1	20	472	12.29	-2.61	-2.29	11.97	2.18	0.41	-11.79	0.31	-11.70	1.05
1	20	473	1.31	-4.05	-2.20	-0.54	-2.55	2.27	-6.04	1.96	-5.72	1.58
1	20	474	11.07	-0.42	-0.40	11.05	-0.49	1.46	-5.46	1.25	-5.26	1.18
1	20	475	6.56	-1.39	-1.38	6.55	0.31	0.11	-6.53	-0.15	-6.27	1.28
1	20	476	14.72	0.72	0.72	14.72	0.24	-0.77	-6.40	-1.06	-6.11	1.25
1	20	477	8.50	-0.51	-0.50	8.50	-0.23	-1.19	-7.23	-1.50	-6.92	1.34
1	20	478	16.07	1.26	1.29	16.04	-0.69	-1.08	-6.65	-1.41	-6.32	1.31
1	20	479	9.32	0.17	0.24	9.24	-0.85	-1.20	-7.26	-1.53	-6.93	1.37
1	20	480	16.47	1.66	1.78	16.34	-1.34	-1.04	-6.59	-1.38	-6.25	1.33
1	20	481	9.68	0.25	0.55	9.38	-1.65	-1.16	-7.14	-1.49	-6.80	1.38
1	20	482	16.41	1.84	2.12	16.12	-2.03	-1.00	-6.45	-1.37	-6.09	1.36
1	20	483	9.83	0.42	1.03	9.21	-2.32	-0.95	-6.90	-1.33	-6.52	1.45
1	20	484	16.23	2.04	2.42	15.84	-2.31	-0.68	-6.21	-1.07	-5.82	1.41
1	20	485	9.73	0.63	1.23	9.13	-2.26	-0.92	-6.85	-1.31	-6.46	1.47
1	20	486	16.39	2.17	2.64	15.92	-2.53	-0.91	-6.41	-1.34	-5.98	1.47
1	20	487	10.21	0.51	1.41	9.31	-2.81	-1.03	-7.07	-1.45	-6.65	1.54
1	20	488	16.82	2.07	2.72	16.17	-3.03	-0.88	-6.51	-1.31	-6.08	1.50
1	20	489	10.54	0.27	1.43	9.39	-3.25	-1.00	-7.12	-1.42	-6.71	1.55
1	20	490	17.04	1.89	2.70	16.23	-3.41	-0.85	-6.52	-1.28	-6.09	1.49
1	20	491	10.72	4.17e-02	1.40	9.36	-3.56	-0.98	-7.09	-1.39	-6.67	1.53
1	20	492	17.02	1.67	2.62	16.06	-3.71	-0.85	-6.44	-1.27	-6.02	1.47
1	20	493	10.77	-0.20	1.36	9.21	-3.83	-0.98	-6.96	-1.40	-6.54	1.52
1	20	494	16.77	1.38	2.49	15.66	-3.99	-0.85	-6.29	-1.29	-5.85	1.48
1	20	495	10.72	-0.45	1.33	8.94	-4.09	-0.82	-6.72	-1.28	-6.27	1.57
1	20	496	16.41	1.30	2.42	15.30	-3.94	-0.56	-6.04	-1.02	-5.58	1.52
1	20	497	10.39	-0.29	1.28	8.83	-3.78	-0.77	-6.65	-1.23	-6.19	1.58
1	20	498	16.44	1.24	2.34	15.35	-3.93	-0.76	-6.22	-1.25	-5.72	1.57
1	20	499	10.76	-0.51	1.26	9.00	-4.09	-0.86	-6.84	-1.35	-6.35	1.64
1	20	500	16.79	1.01	2.22	15.58	-4.21	-0.71	-6.29	-1.21	-5.80	1.59
1	20	501	11.00	-0.69	1.21	9.09	-4.32	-0.82	-6.87	-1.30	-6.39	1.63
1	20	502	16.93	0.78	2.07	15.64	-4.38	-0.68	-6.28	-1.16	-5.80	1.56
1	20	503	11.08	-0.78	1.21	9.09	-4.43	-0.81	-6.82	-1.27	-6.35	1.60
1	20	504	16.85	0.58	1.92	15.50	-4.48	-0.69	-6.19	-1.15	-5.73	1.53
1	20	505	11.02	-0.81	1.25	8.96	-4.49	-0.82	-6.68	-1.27	-6.23	1.57
1	20	506	16.51	0.39	1.78	15.11	-4.53	-0.69	-6.03	-1.16	-5.56	1.51
1	20	507	10.69	-1.45	0.57	8.67	-4.52	-0.70	-6.44	-1.18	-5.96	1.59
1	20	508	16.04	0.39	1.70	14.73	-4.33	-0.45	-5.79	-0.94	-5.31	1.53
1	20	509	10.26	-1.16	0.56	8.54	-4.08	-0.64	-6.35	-1.11	-5.88	1.58
1	20	510	15.95	0.42	1.61	14.76	-4.13	-0.62	-5.94	-1.12	-5.43	1.56
1	20	511	10.47	-1.19	0.58	8.71	-4.18	-0.73	-6.53	-1.22	-6.03	1.62

1	20	512	16.18	0.35	1.54	14.99	-4.17	-0.59	-6.01	-1.09	-5.51	1.56
1	20	513	10.42	-1.73	-9.43e-02	8.79	-4.14	-0.71	-6.55	-1.18	-6.08	1.59
1	20	514	16.17	0.33	1.46	15.03	-4.08	-0.58	-5.99	-1.05	-5.52	1.52
1	20	515	10.15	-2.40	-0.98	8.74	-3.96	-0.71	-6.49	-1.16	-6.05	1.54
1	20	516	15.86	0.36	1.39	14.83	-3.87	-0.60	-5.90	-1.04	-5.45	1.47
1	20	517	9.80	-2.30	-1.03	8.53	-3.71	-0.72	-6.36	-1.16	-5.93	1.50
1	20	518	15.28	0.39	1.31	14.36	-3.60	-0.61	-5.74	-1.05	-5.30	1.44
1	20	519	9.28	-2.17	-1.04	8.15	-3.41	-0.56	-6.11	-1.00	-5.66	1.51
1	20	520	14.56	0.53	1.20	13.88	-3.01	-0.33	-5.48	-0.78	-5.04	1.45
1	20	521	8.60	-1.65	-0.96	7.91	-2.56	-0.57	-6.01	-1.01	-5.57	1.48
1	20	522	14.19	0.63	1.06	13.77	-2.37	-0.55	-5.59	-1.02	-5.13	1.46
1	20	523	8.50	-1.25	-0.76	8.00	-2.14	-0.66	-6.11	-1.11	-5.66	1.50
1	20	524	14.16	0.74	0.99	13.91	-1.82	-0.51	-5.58	-0.95	-5.13	1.43
1	20	525	8.48	-8.43e-02	0.16	8.23	-1.44	-0.61	-6.01	-1.03	-5.59	1.45
1	20	526	14.22	0.94	1.00	14.16	-0.86	-0.36	-5.36	-0.76	-4.97	1.34
1	20	527	8.94	7.22e-02	7.91e-02	8.94	-0.25	-0.19	-5.61	-0.52	-5.28	1.30
1	20	528	14.95	0.70	0.71	14.95	0.26	0.27	-4.81	3.26e-03	-4.55	1.12
1	20	529	10.92	-0.88	-0.76	10.79	1.20	0.76	-4.84	0.58	-4.66	1.00
1	20	530	17.40	-7.46e-02	-5.35e-02	17.38	0.61	1.47	-4.10	1.39	-4.02	0.65
1	20	531	13.31	-1.51	-1.51	13.31	1.82e-02	1.36	-4.48	1.36	-4.48	6.28e-02
1	20	532	2.98	-0.86	-0.39	2.51	-1.26	2.57	-0.61	1.75	0.22	1.39
1	20	533	5.41	-0.72	-0.50	5.19	-1.15	1.99	-0.77	1.50	-0.28	1.06
1	20	534	6.28	-0.96	-0.90	6.22	-0.65	1.55	-1.15	0.96	-0.56	1.12
1	20	535	8.40	-0.94	-0.85	8.30	-0.93	0.82	-1.68	8.80e-02	-0.95	1.14
1	20	536	8.34	-1.09	-0.90	8.15	-1.33	0.70	-1.97	-0.25	-1.02	1.28
1	20	537	9.91	-0.56	-0.22	9.57	-1.86	0.61	-2.12	-0.34	-1.17	1.30
1	20	538	9.26	-0.53	-5.17e-02	8.78	-2.11	0.72	-2.14	-0.33	-1.09	1.37
1	20	539	10.45	-0.27	0.35	9.83	-2.50	0.67	-2.18	-0.34	-1.17	1.36
1	20	540	9.70	-0.26	0.61	8.82	-2.82	0.78	-2.16	-0.31	-1.06	1.42
1	20	541	10.69	0.17	1.20	9.67	-3.12	0.75	-2.20	-0.32	-1.12	1.42
1	20	542	9.93	-0.17	1.17	8.59	-3.42	0.94	-2.13	-0.20	-0.99	1.48
1	20	543	10.71	0.26	1.51	9.46	-3.40	0.94	-2.09	-8.49e-02	-1.07	1.43
1	20	544	9.85	0.14	1.46	8.53	-3.33	0.95	-2.08	-0.16	-0.98	1.46
1	20	545	10.92	0.32	1.74	9.51	-3.60	0.79	-2.20	-0.31	-1.10	1.44
1	20	546	10.34	-6.40e-02	1.60	8.68	-3.82	0.89	-2.21	-0.30	-1.03	1.51
1	20	547	11.39	0.12	1.83	9.69	-4.04	0.82	-2.26	-0.31	-1.13	1.48
1	20	548	10.73	-0.35	1.62	8.76	-4.23	0.92	-2.24	-0.28	-1.05	1.53
1	20	549	11.68	-0.14	1.81	9.73	-4.38	0.85	-2.27	-0.28	-1.14	1.50
1	20	550	10.91	-0.63	1.55	8.72	-4.52	0.94	-2.24	-0.26	-1.04	1.54
1	20	551	11.76	-0.44	1.72	9.60	-4.65	0.86	-2.27	-0.28	-1.12	1.51
1	20	552	10.95	-0.97	1.44	8.55	-4.79	0.96	-2.25	-0.27	-1.01	1.56
1	20	553	11.71	-0.78	1.62	9.32	-4.91	0.91	-2.27	-0.29	-1.08	1.54
1	20	554	10.93	-1.33	1.34	8.25	-5.06	1.09	-2.21	-0.18	-0.95	1.60
1	20	555	11.50	-0.90	1.53	9.06	-4.93	1.05	-2.17	-0.11	-1.02	1.54
1	20	556	10.60	-1.14	1.30	8.16	-4.77	1.09	-2.15	-0.13	-0.93	1.57
1	20	557	11.53	-0.92	1.51	9.09	-4.94	0.93	-2.25	-0.27	-1.05	1.55
1	20	558	10.95	-1.38	1.27	8.30	-5.07	1.03	-2.27	-0.25	-0.98	1.61
1	20	559	11.72	-1.69	0.77	9.25	-5.19	0.96	-2.29	-0.26	-1.08	1.58
1	20	560	11.22	-1.53	1.29	8.40	-5.29	1.06	-2.27	-0.22	-0.99	1.62
1	20	561	11.87	-1.90	0.65	9.31	-5.35	0.98	-2.28	-0.22	-1.08	1.57
1	20	562	11.14	-2.17	0.59	8.38	-5.39	1.06	-2.25	-0.20	-0.99	1.61
1	20	563	11.84	-2.05	0.57	9.23	-5.43	0.97	-2.26	-0.22	-1.07	1.56
1	20	564	11.08	-2.25	0.61	8.22	-5.47	1.06	-2.23	-0.21	-0.96	1.60
1	20	565	11.53	-2.78	-0.21	8.96	-5.50	1.00	-2.24	-0.22	-1.02	1.57
1	20	566	10.55	-3.74	-1.10	7.91	-5.54	1.15	-2.18	-0.12	-0.90	1.62
1	20	567	11.14	-2.78	-0.30	8.66	-5.33	1.12	-2.12	-3.38e-02	-0.96	1.56
1	20	568	10.10	-3.53	-1.24	7.80	-5.10	1.14	-2.11	-8.67e-02	-0.88	1.57
1	20	569	10.85	-3.58	-1.41	8.68	-5.16	1.00	-2.18	-0.20	-0.99	1.54
1	20	570	10.09	-4.45	-2.29	7.93	-5.17	1.08	-2.19	-0.18	-0.92	1.59
1	20	571	10.98	-3.72	-1.58	8.84	-5.18	1.00	-2.21	-0.19	-1.02	1.55
1	20	572	10.11	-4.65	-2.56	8.01	-5.15	1.08	-2.18	-0.16	-0.94	1.58
1	20	573	10.91	-3.78	-1.74	8.87	-5.07	1.00	-2.18	-0.16	-1.02	1.53
1	20	574	9.90	-4.75	-2.80	7.95	-4.98	1.07	-2.14	-0.14	-0.94	1.55
1	20	575	10.49	-4.58	-2.80	8.71	-4.87	0.98	-2.14	-0.16	-1.01	1.50
1	20	576	9.53	-4.80	-2.99	7.72	-4.75	1.05	-2.11	-0.15	-0.91	1.53
1	20	577	10.03	-4.57	-2.92	8.38	-4.62	0.98	-2.11	-0.16	-0.97	1.50
1	20	578	9.04	-4.75	-3.06	7.36	-4.52	1.11	-2.06	-8.31e-02	-0.86	1.54
1	20	579	9.43	-4.27	-2.88	8.04	-4.14	1.07	-2.00	-1.24e-02	-0.92	1.47
1	20	580	8.41	-4.15	-2.91	7.17	-3.75	1.08	-1.98	-5.58e-02	-0.85	1.48
1	20	581	9.07	-3.75	-2.65	7.98	-3.58	0.95	-2.04	-0.15	-0.94	1.44
1	20	582	8.27	-3.65	-2.60	7.22	-3.37	1.02	-2.05	-0.14	-0.88	1.49
1	20	583	8.96	-3.10	-2.26	8.12	-3.07	0.96	-2.05	-0.13	-0.96	1.45
1	20	584	8.12	-2.86	-2.14	7.40	-2.71	1.04	-2.00	-7.91e-02	-0.88	1.47
1	20	585	8.86	-1.72	-1.26	8.40	-2.16	1.02	-1.92	2.09e-02	-0.92	1.39
1	20	586	8.13	-1.78	-1.55	7.90	-1.49	1.18	-1.73	0.25	-0.80	1.36
1	20	587	9.12	-1.00	-0.96	9.07	-0.69	1.29	-1.47	0.58	-0.77	1.20
1	20	588	9.09	-0.99	-0.97	9.07	0.47	1.55	-1.11	1.05	-0.61	1.04
1	20	589	10.78	-0.40	-0.39	10.78	0.18	1.51	-0.77	1.31	-0.57	0.65
1	20	590	11.81	-0.65	-0.45	11.61	-1.57	1.17	-0.46	1.17	-0.45	6.65e-02

1	20	591	2.68	-0.29	8.20e-02	2.31	-0.98	2.62	1.28	1.69	2.22	0.61
1	20	592	1.80	-1.24	-0.96	1.52	-0.88	2.46	1.13	1.73	1.87	0.66
1	20	593	3.78	-1.71	-1.58	3.64	-0.85	2.38	0.52	1.43	1.47	0.93
1	20	594	3.74	-2.56	-2.05	3.23	-1.72	1.97	-0.17	0.68	1.12	1.05
1	20	595	5.72	-2.24	-1.58	5.06	-2.20	1.94	-0.64	0.30	1.01	1.24
1	20	596	5.09	-2.58	-1.42	3.93	-2.75	1.86	-0.82	0.15	0.89	1.29
1	20	597	6.70	-2.08	-0.82	5.44	-3.09	1.96	-0.92	0.12	0.91	1.38
1	20	598	5.82	-2.52	-0.78	4.07	-3.40	1.91	-0.95	0.11	0.86	1.38
1	20	599	7.30	-1.75	0.11	5.44	-3.66	2.01	-0.99	0.12	0.90	1.45
1	20	600	6.41	-2.30	0.11	4.00	-3.89	1.97	-1.00	0.12	0.86	1.44
1	20	601	7.66	-2.07	0.24	5.34	-4.14	2.09	-1.00	0.19	0.91	1.50
1	20	602	6.66	-2.37	0.25	4.04	-4.10	2.03	-0.93	0.24	0.86	1.45
1	20	603	7.66	-1.58	0.80	5.28	-4.04	2.06	-0.97	0.19	0.90	1.48
1	20	604	6.87	-2.25	0.71	3.91	-4.27	1.98	-1.02	0.11	0.85	1.45
1	20	605	8.21	-1.51	1.39	5.32	-4.44	2.07	-1.07	0.12	0.89	1.52
1	20	606	7.43	-2.23	1.22	3.98	-4.63	2.01	-1.06	0.11	0.84	1.49
1	20	607	8.56	-1.77	1.41	5.38	-4.77	2.10	-1.09	0.13	0.88	1.55
1	20	608	7.68	-2.49	1.20	4.00	-4.89	2.03	-1.08	0.12	0.83	1.51
1	20	609	8.71	-2.06	1.31	5.34	-5.00	2.11	-1.10	0.13	0.87	1.57
1	20	610	7.65	-3.06	0.68	3.92	-5.10	2.05	-1.09	0.12	0.83	1.53
1	20	611	8.78	-2.42	1.15	5.21	-5.22	2.13	-1.13	0.13	0.87	1.59
1	20	612	7.57	-3.71	9.28e-02	3.77	-5.33	2.08	-1.12	0.13	0.83	1.56
1	20	613	8.60	-3.43	9.69e-02	5.08	-5.48	2.19	-1.13	0.19	0.87	1.63
1	20	614	7.56	-3.83	-4.54e-02	3.77	-5.36	2.13	-1.05	0.24	0.83	1.56
1	20	615	8.31	-3.31	-5.96e-03	5.01	-5.24	2.16	-1.09	0.20	0.87	1.59
1	20	616	7.47	-3.97	-0.13	3.64	-5.40	2.07	-1.12	0.13	0.82	1.56
1	20	617	8.56	-3.59	-6.91e-02	5.03	-5.51	2.16	-1.17	0.14	0.85	1.62
1	20	618	7.47	-4.68	-0.91	3.69	-5.62	2.09	-1.15	0.13	0.81	1.59
1	20	619	8.74	-3.79	-0.14	5.09	-5.69	2.17	-1.17	0.15	0.84	1.64
1	20	620	7.31	-5.44	-1.87	3.73	-5.73	2.09	-1.15	0.15	0.80	1.59
1	20	621	8.32	-5.12	-1.88	5.08	-5.75	2.16	-1.17	0.16	0.83	1.63
1	20	622	7.18	-5.84	-2.33	3.67	-5.78	2.09	-1.14	0.15	0.79	1.58
1	20	623	8.17	-5.58	-2.37	4.96	-5.81	2.16	-1.17	0.16	0.83	1.63
1	20	624	6.99	-6.34	-2.88	3.53	-5.84	2.10	-1.15	0.16	0.79	1.59
1	20	625	8.00	-6.11	-2.92	4.82	-5.90	2.20	-1.14	0.23	0.83	1.65
1	20	626	6.72	-6.63	-3.41	3.49	-5.72	2.13	-1.06	0.28	0.80	1.57
1	20	627	7.54	-6.19	-3.38	4.73	-5.53	2.16	-1.09	0.24	0.83	1.60
1	20	628	6.42	-6.86	-3.80	3.36	-5.59	2.06	-1.10	0.17	0.78	1.55
1	20	629	7.54	-6.51	-3.72	4.75	-5.61	2.13	-1.14	0.17	0.82	1.60
1	20	630	6.40	-7.15	-4.16	3.41	-5.62	2.06	-1.11	0.17	0.77	1.56
1	20	631	7.49	-6.79	-4.10	4.80	-5.58	2.12	-1.13	0.19	0.80	1.60
1	20	632	6.24	-7.38	-4.56	3.42	-5.51	2.04	-1.09	0.19	0.76	1.54
1	20	633	7.26	-7.01	-4.50	4.75	-5.43	2.10	-1.11	0.20	0.80	1.58
1	20	634	5.93	-7.57	-4.95	3.32	-5.33	2.02	-1.07	0.19	0.76	1.52
1	20	635	6.92	-7.21	-4.87	4.58	-5.25	2.08	-1.09	0.19	0.79	1.56
1	20	636	5.58	-7.74	-5.29	3.13	-5.16	2.01	-1.07	0.19	0.75	1.51
1	20	637	6.61	-7.35	-5.15	4.40	-5.09	2.10	-1.06	0.25	0.79	1.56
1	20	638	5.23	-7.60	-5.45	3.07	-4.79	2.03	-0.98	0.29	0.76	1.48
1	20	639	6.06	-6.95	-5.16	4.26	-4.49	2.04	-1.00	0.25	0.78	1.50
1	20	640	4.82	-7.18	-5.28	2.92	-4.39	1.94	-1.01	0.19	0.74	1.45
1	20	641	5.91	-6.50	-4.83	4.24	-4.23	2.00	-1.05	0.19	0.76	1.50
1	20	642	4.68	-6.52	-4.84	3.00	-4.00	1.92	-1.02	0.19	0.71	1.45
1	20	643	5.73	-5.64	-4.27	4.36	-3.70	1.97	-1.02	0.22	0.73	1.47
1	20	644	4.47	-5.31	-4.10	3.26	-3.22	1.90	-0.93	0.29	0.68	1.40
1	20	645	5.52	-4.10	-3.30	4.72	-2.66	1.94	-0.81	0.42	0.70	1.37
1	20	646	4.34	-3.31	-2.75	3.78	-2.00	1.86	-0.53	0.65	0.68	1.19
1	20	647	5.49	-1.68	-1.56	5.37	-0.92	1.93	-0.19	1.00	0.74	1.05
1	20	648	4.29	-1.06	-0.89	4.12	-0.95	1.69	0.18	1.12	0.75	0.73
1	20	649	7.54	-0.66	7.59e-02	6.80	-2.35	1.37	0.37	0.99	0.74	0.48
1	20	650	1.75	-0.50	0.12	1.13	-1.00	2.32	1.33	1.71	1.94	0.49
1	20	651	1.73	-1.71	-1.63	1.66	-0.52	2.64	1.76	2.08	2.32	0.42
1	20	652	1.55	-3.65	-3.64	1.53	-0.29	2.55	1.31	1.86	2.00	0.62
1	20	653	1.55	-3.63	-3.50	1.42	-0.80	2.31	0.46	1.08	1.69	0.87
1	20	654	2.47	-2.64	-2.39	2.22	-1.10	2.25	-0.11	0.60	1.54	1.08
1	20	655	2.09	-2.11	-1.58	1.56	-1.40	2.25	-0.36	0.39	1.50	1.17
1	20	656	3.03	-1.52	-0.88	2.39	-1.58	2.27	-0.49	0.30	1.47	1.25
1	20	657	2.50	-1.74	-0.82	1.58	-1.75	2.28	-0.53	0.27	1.47	1.27
1	20	658	3.29	-1.74	-0.83	2.38	-1.94	2.30	-0.57	0.27	1.46	1.31
1	20	659	2.77	-2.04	-0.83	1.55	-2.09	2.31	-0.58	0.27	1.46	1.32
1	20	660	3.45	-2.05	-0.94	2.35	-2.20	2.33	-0.60	0.30	1.44	1.35
1	20	661	2.91	-2.07	-0.89	1.73	-2.12	2.33	-0.56	0.33	1.44	1.33
1	20	662	3.36	-1.49	-0.46	2.33	-1.98	2.31	-0.59	0.30	1.43	1.34
1	20	663	3.04	-1.35	0.19	1.49	-2.09	2.31	-0.62	0.26	1.43	1.34
1	20	664	4.11	-0.41	1.39	2.31	-2.21	2.33	-0.66	0.25	1.42	1.37
1	20	665	3.70	-0.92	1.29	1.48	-2.31	2.33	-0.66	0.25	1.42	1.37
1	20	666	4.37	-0.60	1.44	2.33	-2.44	2.34	-0.69	0.25	1.41	1.40
1	20	667	3.86	-1.17	1.21	1.49	-2.51	2.34	-0.68	0.25	1.41	1.39
1	20	668	4.23	-1.11	0.80	2.31	-2.56	2.35	-0.70	0.25	1.40	1.42
1	20	669	3.85	-1.40	1.01	1.44	-2.61	2.35	-0.69	0.25	1.40	1.41

1	20	670	4.06	-1.72	8.90e-02	2.25	-2.68	2.36	-0.72	0.25	1.39	1.43
1	20	671	3.22	-2.82	-0.98	1.38	-2.78	2.37	-0.71	0.27	1.39	1.43
1	20	672	3.83	-2.81	-1.19	2.21	-2.85	2.39	-0.72	0.30	1.38	1.46
1	20	673	3.18	-3.03	-1.39	1.54	-2.74	2.38	-0.68	0.33	1.38	1.44
1	20	674	3.52	-2.77	-1.43	2.18	-2.58	2.37	-0.71	0.30	1.36	1.44
1	20	675	2.89	-3.15	-1.57	1.31	-2.65	2.36	-0.72	0.27	1.37	1.44
1	20	676	3.62	-3.05	-1.59	2.16	-2.76	2.37	-0.76	0.26	1.36	1.47
1	20	677	2.96	-3.49	-1.83	1.31	-2.82	2.37	-0.75	0.25	1.36	1.46
1	20	678	3.66	-3.42	-1.94	2.18	-2.88	2.37	-0.77	0.26	1.34	1.48
1	20	679	2.95	-3.95	-2.32	1.32	-2.94	2.36	-0.76	0.26	1.34	1.46
1	20	680	3.60	-3.93	-2.50	2.17	-2.95	2.36	-0.77	0.26	1.33	1.47
1	20	681	2.81	-4.54	-3.00	1.27	-2.98	2.35	-0.76	0.26	1.33	1.46
1	20	682	3.46	-4.63	-3.28	2.11	-3.02	2.36	-0.77	0.27	1.32	1.47
1	20	683	2.64	-5.31	-3.90	1.22	-3.05	2.35	-0.75	0.28	1.32	1.46
1	20	684	3.32	-5.51	-4.26	2.07	-3.08	2.37	-0.75	0.31	1.31	1.48
1	20	685	2.51	-5.99	-4.83	1.36	-2.92	2.36	-0.70	0.34	1.31	1.45
1	20	686	2.99	-5.86	-4.89	2.03	-2.76	2.33	-0.72	0.31	1.30	1.45
1	20	687	2.19	-6.22	-5.16	1.14	-2.78	2.31	-0.73	0.29	1.30	1.43
1	20	688	2.97	-6.12	-5.15	2.00	-2.80	2.32	-0.75	0.27	1.29	1.45
1	20	689	2.19	-6.59	-5.52	1.13	-2.87	2.30	-0.74	0.27	1.29	1.43
1	20	690	2.99	-6.57	-5.60	2.02	-2.89	2.30	-0.75	0.28	1.28	1.44
1	20	691	2.12	-7.05	-6.05	1.13	-2.86	2.28	-0.73	0.28	1.28	1.42
1	20	692	2.87	-7.05	-6.17	1.99	-2.82	2.28	-0.73	0.28	1.26	1.42
1	20	693	1.97	-7.54	-6.64	1.08	-2.78	2.26	-0.71	0.28	1.27	1.40
1	20	694	2.71	-7.57	-6.77	1.91	-2.75	2.26	-0.72	0.28	1.26	1.41
1	20	695	1.82	-8.09	-7.27	1.01	-2.72	2.25	-0.70	0.29	1.25	1.39
1	20	696	2.57	-8.16	-7.43	1.85	-2.70	2.26	-0.69	0.32	1.24	1.40
1	20	697	1.77	-8.46	-7.80	1.11	-2.51	2.23	-0.64	0.35	1.24	1.37
1	20	698	2.31	-8.13	-7.60	1.78	-2.28	2.20	-0.65	0.32	1.23	1.36
1	20	699	1.46	-8.15	-7.60	0.91	-2.23	2.18	-0.66	0.29	1.23	1.34
1	20	700	2.23	-7.72	-7.22	1.74	-2.17	2.17	-0.68	0.28	1.21	1.34
1	20	701	1.43	-7.65	-7.15	0.93	-2.06	2.14	-0.66	0.28	1.21	1.32
1	20	702	2.20	-7.07	-6.67	1.79	-1.90	2.11	-0.65	0.28	1.17	1.31
1	20	703	1.40	-6.71	-6.38	1.08	-1.59	2.04	-0.60	0.30	1.14	1.25
1	20	704	2.15	-5.73	-5.55	1.97	-1.18	1.97	-0.52	0.36	1.09	1.19
1	20	705	1.36	-4.74	-4.66	1.28	-0.69	1.88	-0.32	0.51	1.05	1.07
1	20	706	2.27	-2.26	-2.26	2.27	-3.68e-02	1.86	2.51e-03	0.79	1.07	0.92
1	20	707	1.06	0.34	0.43	0.97	-0.24	1.50	0.32	0.86	0.97	0.59
1	20	708	3.53	1.48	2.47	2.54	-1.02	0.98	0.41	0.74	0.64	0.28
1	20	709	-0.12	-2.42	-1.84	-0.70	-1.00	1.89	0.18	0.95	1.12	0.85
1	20	710	2.56	-1.34	-1.30	2.52	-0.40	2.26	1.27	1.65	1.89	0.48
1	20	711	1.40	-1.42	-1.41	1.39	0.16	2.30	1.45	1.97	1.78	0.41
1	20	712	1.94	-1.12	-1.09	1.91	0.29	2.20	0.70	1.35	1.55	0.74
1	20	713	1.50	-1.07	-1.01	1.44	0.40	2.07	6.21e-02	0.73	1.40	0.95
1	20	714	1.56	-0.91	-0.85	1.50	0.38	2.08	-0.25	0.44	1.39	1.07
1	20	715	1.35	-1.03	-0.99	1.30	0.32	2.04	-0.38	0.31	1.34	1.10
1	20	716	1.42	-1.18	-1.16	1.40	0.23	2.08	-0.45	0.28	1.36	1.14
1	20	717	1.26	-1.33	-1.33	1.26	5.88e-02	2.06	-0.47	0.26	1.33	1.15
1	20	718	1.37	-1.36	-1.36	1.36	-4.03e-02	2.10	-0.49	0.27	1.34	1.18
1	20	719	1.24	-1.32	-1.32	1.24	-5.02e-02	2.08	-0.49	0.28	1.31	1.18
1	20	720	1.58	-1.32	-1.32	1.57	7.69e-02	2.12	-0.49	0.30	1.33	1.20
1	20	721	1.25	-1.50	-1.46	1.22	0.30	2.07	-0.50	0.28	1.30	1.18
1	20	722	1.36	5.89e-03	6.41e-02	1.30	0.27	2.11	-0.54	0.26	1.32	1.21
1	20	723	1.91	1.15	1.86	1.20	0.19	2.08	-0.55	0.23	1.29	1.21
1	20	724	1.95	1.23	1.91	1.27	0.16	2.12	-0.58	0.23	1.31	1.24
1	20	725	1.88	1.20	1.88	1.20	7.99e-03	2.09	-0.58	0.23	1.28	1.23
1	20	726	1.74	1.26	1.74	1.26	-3.65e-02	2.13	-0.60	0.24	1.30	1.25
1	20	727	1.58	1.17	1.57	1.18	-5.39e-02	2.10	-0.60	0.23	1.27	1.24
1	20	728	1.38	1.18	1.34	1.22	-7.45e-02	2.13	-0.61	0.24	1.29	1.27
1	20	729	1.14	4.87e-02	6.03e-02	1.13	-0.11	2.11	-0.61	0.24	1.26	1.26
1	20	730	1.19	-1.07	-1.06	1.17	-0.19	2.15	-0.62	0.26	1.28	1.29
1	20	731	1.12	-1.21	-1.19	1.10	-0.20	2.13	-0.61	0.27	1.25	1.28
1	20	732	1.36	-1.39	-1.39	1.36	-5.96e-02	2.16	-0.60	0.29	1.26	1.29
1	20	733	1.08	-1.57	-1.56	1.07	0.17	2.11	-0.60	0.27	1.24	1.27
1	20	734	1.11	-1.59	-1.58	1.10	0.16	2.15	-0.64	0.25	1.25	1.30
1	20	735	1.04	-1.70	-1.70	1.04	4.63e-02	2.11	-0.65	0.24	1.23	1.29
1	20	736	1.07	-1.88	-1.88	1.07	2.30e-02	2.14	-0.67	0.24	1.24	1.31
1	20	737	1.02	-2.16	-2.16	1.02	-5.03e-02	2.11	-0.66	0.23	1.22	1.29
1	20	738	1.05	-2.51	-2.50	1.05	-0.14	2.14	-0.67	0.24	1.23	1.31
1	20	739	1.00	-2.92	-2.91	0.99	-0.16	2.10	-0.66	0.23	1.20	1.29
1	20	740	1.01	-3.39	-3.38	1.00	-0.21	2.13	-0.67	0.24	1.22	1.31
1	20	741	0.96	-3.93	-3.92	0.95	-0.24	2.10	-0.66	0.24	1.20	1.29
1	20	742	0.97	-4.56	-4.55	0.96	-0.27	2.13	-0.66	0.26	1.21	1.31
1	20	743	0.92	-5.23	-5.22	0.91	-0.27	2.11	-0.64	0.28	1.18	1.30
1	20	744	1.13	-5.74	-5.74	1.13	-9.35e-02	2.13	-0.63	0.30	1.20	1.30
1	20	745	0.87	-6.06	-6.06	0.87	6.67e-02	2.07	-0.62	0.28	1.17	1.27
1	20	746	0.88	-6.20	-6.20	0.88	7.65e-02	2.10	-0.65	0.26	1.19	1.29
1	20	747	0.82	-6.38	-6.38	0.82	4.97e-02	2.06	-0.65	0.25	1.16	1.27
1	20	748	0.84	-6.65	-6.65	0.83	-7.27e-02	2.08	-0.66	0.25	1.17	1.29

1	20	749	0.80	-6.98	-6.98	0.80	-0.14	2.04	-0.65	0.24	1.15	1.26
1	20	750	0.82	-7.36	-7.36	0.81	-0.15	2.06	-0.65	0.25	1.16	1.28
1	20	751	0.77	-7.75	-7.75	0.76	-0.16	2.02	-0.63	0.25	1.14	1.25
1	20	752	0.77	-8.17	-8.17	0.77	-0.17	2.04	-0.64	0.25	1.15	1.26
1	20	753	0.71	-8.60	-8.60	0.70	-0.19	2.00	-0.62	0.25	1.13	1.24
1	20	754	0.71	-9.07	-9.07	0.71	-0.20	2.03	-0.62	0.27	1.14	1.25
1	20	755	0.66	-9.55	-9.55	0.66	-0.19	2.00	-0.59	0.29	1.12	1.23
1	20	756	0.84	-9.86	-9.86	0.84	-5.45e-02	2.01	-0.58	0.30	1.13	1.23
1	20	757	0.61	-9.93	-9.93	0.61	0.16	1.96	-0.56	0.29	1.11	1.19
1	20	758	0.61	-9.83	-9.83	0.61	0.18	1.97	-0.59	0.27	1.12	1.21
1	20	759	0.55	-9.71	-9.70	0.55	0.18	1.92	-0.58	0.25	1.10	1.18
1	20	760	0.59	-9.58	-9.58	0.58	0.21	1.92	-0.59	0.24	1.10	1.18
1	20	761	0.55	-9.36	-9.35	0.54	0.28	1.85	-0.56	0.22	1.06	1.13
1	20	762	0.68	-8.89	-8.86	0.65	0.48	1.80	-0.54	0.23	1.04	1.10
1	20	763	0.75	-7.92	-7.84	0.68	0.81	1.68	-0.45	0.26	0.97	1.00
1	20	764	1.07	-6.23	-6.01	0.85	1.24	1.64	-0.31	0.39	0.93	0.94
1	20	765	1.42	-4.02	-3.47	0.87	1.64	1.50	-6.57e-02	0.52	0.91	0.76
1	20	766	0.41	-2.24	-1.71	-0.12	1.06	0.97	0.15	0.39	0.73	0.38
1	20	767	0.37	-1.01	-0.93	0.30	0.32	0.35	0.13	0.17	0.31	-8.29e-02

M_G	**N max**	**N min**	**N 1**	**N 2**	**N 1-2**	**M max**	**M min**	**M 1**	**M 2**	**M 1-2**
		-28.11	-16.37	-27.61	-18.83		-30.66	-6.67	-30.55	-4.90
	21.76		16.36	20.06	3.89	8.62		4.69	7.50	3.05

Macro	Tipo	Angolo 1-X (gradi)
32	**Guscio**	**0.0**

M_G	**CDC**	**Nodo**	**N max**	**N min**	**N 1**	**N 2**	**N 1-2**	**M max**	**M min**	**M 1**	**M 2**	**M 1-2**
			kN/ m	kN/ m	kN/ m	kN/ m	kN/ m	kN	kN	kN	kN	kN
32	17	1190	0.52	-2.85	-2.84	0.50	0.24	2.82	0.33	2.82	0.33	-2.10e-02
32	17	1191	0.32	-2.56	-2.55	0.31	-0.16	0.57	-0.13	0.42	2.90e-02	-0.29
32	17	1192	0.33	-1.87	-1.86	0.33	-9.43e-02	0.13	-0.11	2.84e-02	-1.70e-02	-0.12
32	17	1193	0.38	-1.25	-1.13	0.27	0.42	0.23	-0.25	-9.24e-03	-9.51e-03	-0.24
32	17	1194	0.65	-0.44	-0.16	0.37	0.47	0.13	-7.91e-02	5.21e-02	-3.80e-03	-9.94e-02
32	17	1195	0.64	-0.30	8.89e-02	0.25	0.47	0.25	-0.24	1.54e-02	-3.49e-03	-0.25
32	17	1196	0.68	-0.38	-0.10	0.41	0.46	0.12	-9.34e-02	2.54e-02	-3.77e-03	-0.10
32	17	1197	0.33	-0.64	-0.32	8.68e-03	0.45	0.25	-0.24	1.10e-02	-1.99e-03	-0.25
32	17	1198	0.60	-0.47	-0.25	0.38	0.43	0.14	-9.99e-02	4.13e-02	-1.99e-03	-0.12
32	17	1199	0.31	-0.58	-0.27	-2.50e-03	0.42	0.25	-0.33	-9.24e-02	1.09e-02	-0.28
32	17	1200	0.50	-0.72	-0.57	0.35	0.40	2.74e-02	-9.45e-03	1.95e-02	-1.59e-03	1.51e-02
32	17	1201	4.19e-02	-0.99	-0.83	-0.12	0.37	0.34	-0.25	0.11	-1.51e-02	-0.28
32	17	1202	0.39	-0.91	-0.80	0.28	0.36	0.13	-0.12	9.85e-03	-3.77e-04	-0.12
32	17	1203	3.53e-02	-0.93	-0.78	-0.11	0.34	0.26	-0.26	5.37e-03	-2.40e-03	-0.26
32	17	1204	0.35	-0.89	-0.80	0.26	0.33	0.12	-9.87e-02	2.40e-02	3.97e-05	-0.11
32	17	1205	2.37e-02	-0.90	-0.77	-0.10	0.32	0.27	-0.26	6.84e-03	-1.41e-03	-0.26
32	17	1206	0.31	-0.85	-0.76	0.22	0.31	0.12	-0.10	1.78e-02	-1.09e-03	-0.11
32	17	1207	2.24e-02	-0.83	-0.71	-9.92e-02	0.30	0.27	-0.27	4.27e-03	-2.08e-03	-0.27
32	17	1208	0.11	-0.79	-0.68	2.39e-03	0.29	0.12	-0.11	1.09e-02	-2.19e-03	-0.11
32	17	1209	3.57e-02	-0.73	-0.61	-8.89e-02	0.28	0.27	-0.27	6.67e-03	-7.97e-04	-0.27
32	17	1210	0.11	-0.66	-0.56	7.10e-03	0.27	0.14	-0.11	2.85e-02	-1.20e-03	-0.13
32	17	1211	0.20	-0.54	-0.43	8.99e-02	0.26	0.26	-0.35	-0.10	1.29e-02	-0.30
32	17	1212	0.12	-0.64	-0.55	3.21e-02	0.25	2.25e-02	-1.46e-02	8.45e-03	-5.90e-04	1.80e-02
32	17	1213	5.10e-02	-0.73	-0.64	-3.40e-02	0.24	0.36	-0.26	0.11	-1.47e-02	-0.30
32	17	1214	0.10	-0.57	-0.47	-8.27e-04	0.25	0.12	-0.13	-7.61e-03	3.61e-04	-0.13
32	17	1215	0.11	-0.46	-0.32	-1.91e-02	0.24	0.27	-0.27	8.49e-05	-9.21e-04	-0.27
32	17	1216	0.15	-0.37	-0.22	-1.10e-04	0.24	0.12	-0.11	7.99e-03	1.15e-03	-0.12
32	17	1217	0.18	-0.29	-9.81e-02	-1.14e-02	0.23	0.28	-0.27	2.06e-03	4.59e-04	-0.27
32	17	1218	0.25	-0.22	3.04e-02	-3.99e-03	0.24	0.12	-0.12	5.93e-04	1.40e-04	-0.12
32	17	1219	0.33	-0.16	0.15	9.97e-03	0.23	0.27	-0.27	-3.06e-04	7.42e-06	-0.27
32	17	1220	0.40	-0.15	0.26	-3.13e-03	0.24	0.11	-0.12	-5.06e-03	-5.33e-04	-0.12
32	17	1221	0.48	-0.11	0.35	1.98e-02	0.24	0.27	-0.27	-1.65e-03	8.67e-04	-0.27
32	17	1222	0.61	-9.24e-02	0.51	8.15e-03	0.25	0.13	-0.13	5.87e-03	-4.00e-04	-0.13
32	17	1223	0.78	-4.66e-02	0.70	3.35e-02	0.24	0.26	-0.35	-0.11	1.49e-02	-0.30
32	17	1224	0.67	-0.12	0.58	-2.72e-02	0.25	1.40e-02	-2.39e-02	-1.04e-02	3.98e-04	1.82e-02
32	17	1225	0.54	-0.20	0.43	-9.36e-02	0.26	0.35	-0.26	0.10	-1.30e-02	-0.30
32	17	1226	0.67	-0.11	0.56	-7.16e-03	0.27	0.11	-0.14	-2.70e-02	1.47e-03	-0.13
32	17	1227	0.74	-3.29e-02	0.61	9.18e-02	0.28	0.27	-0.27	-6.47e-03	9.09e-04	-0.27
32	17	1228	0.79	-0.11	0.69	-2.04e-03	0.29	0.11	-0.12	-1.08e-02	2.34e-03	-0.11
32	17	1229	0.84	-2.03e-02	0.71	0.10	0.30	0.27	-0.27	-4.36e-03	2.16e-03	-0.27
32	17	1230	0.86	-0.31	0.77	-0.22	0.31	0.10	-0.12	-1.77e-02	1.24e-03	-0.11
32	17	1231	0.90	-2.17e-02	0.78	0.11	0.32	0.26	-0.27	-6.91e-03	1.49e-03	-0.26
32	17	1232	0.90	-0.35	0.80	-0.26	0.33	9.88e-02	-0.12	-2.41e-02	1.06e-04	-0.11
32	17	1233	0.93	-3.29e-02	0.79	0.11	0.34	0.26	-0.26	-5.56e-03	2.45e-03	-0.26
32	17	1234	0.91	-0.39	0.80	-0.28	0.36	0.12	-0.13	-1.07e-02	4.49e-04	-0.12
32	17	1235	0.99	-3.97e-02	0.84	0.12	0.37	0.25	-0.34	-0.11	1.52e-02	-0.28
32	17	1236	0.72	-0.50	0.57	-0.35	0.40	9.67e-03	-2.71e-02	-1.92e-02	1.73e-03	1.51e-02

32	17	1237	0.58	-0.31	0.27	2.78e-03	0.42	0.33	-0.25	9.25e-02	-1.09e-02	-0.28
32	17	1238	0.47	-0.59	0.26	-0.38	0.43	0.10	-0.14	-4.11e-02	2.16e-03	-0.12
32	17	1239	0.65	-0.32	0.33	-8.64e-03	0.45	0.24	-0.25	-1.10e-02	2.09e-03	-0.25
32	17	1240	0.59	-0.62	0.37	-0.40	0.46	9.34e-02	-0.12	-2.56e-02	3.91e-03	-0.10
32	17	1241	0.31	-0.64	-8.46e-02	-0.25	0.47	0.24	-0.25	-1.55e-02	3.56e-03	-0.25
32	17	1242	0.44	-0.65	0.16	-0.37	0.47	7.92e-02	-0.13	-5.23e-02	3.90e-03	-9.94e-02
32	17	1243	1.25	-0.39	1.13	-0.27	0.42	0.25	-0.23	9.24e-03	9.56e-03	-0.24
32	17	1244	1.87	-0.34	1.86	-0.33	-9.43e-02	0.11	-0.13	-2.85e-02	1.71e-02	-0.12
32	17	1245	2.55	-0.32	2.55	-0.31	-0.16	0.13	-0.57	-0.42	-2.89e-02	-0.29
32	17	1246	2.86	-0.52	2.84	-0.50	0.24	-0.33	-2.82	-2.82	-0.33	-2.10e-02
32	17	1247	1.56	-1.32	-1.26	1.50	0.41	2.10	0.32	2.10	0.32	4.11e-02
32	17	1248	0.67	-1.38	-1.35	0.64	0.25	0.41	-0.13	0.27	5.57e-03	-0.23
32	17	1249	0.60	-1.17	-1.11	0.54	0.33	0.14	-7.86e-02	6.56e-02	-5.67e-03	-0.10
32	17	1250	0.64	-1.13	-0.88	0.39	0.62	0.24	-0.25	-2.36e-03	-8.31e-03	-0.25
32	17	1251	0.90	-1.01	-0.72	0.61	0.68	0.12	-7.41e-02	4.72e-02	8.59e-04	-9.54e-02
32	17	1252	0.57	-1.03	-0.61	0.15	0.70	0.26	-0.25	1.42e-02	-2.34e-03	-0.26
32	17	1253	0.92	-0.85	-0.50	0.57	0.71	0.11	-8.81e-02	2.40e-02	-7.40e-04	-9.89e-02
32	17	1254	0.60	-0.94	-0.48	0.14	0.71	0.26	-0.26	8.46e-03	-2.44e-03	-0.26
32	17	1255	0.85	-0.81	-0.45	0.49	0.68	0.11	-0.11	4.49e-03	-3.19e-03	-0.11
32	17	1256	0.56	-0.93	-0.51	0.13	0.67	0.29	-0.26	8.25e-03	2.32e-02	-0.28
32	17	1257	0.53	-0.98	-0.61	0.16	0.65	7.15e-02	-5.33e-02	1.81e-02	1.65e-05	-6.17e-02
32	17	1258	0.20	-1.15	-0.74	-0.20	0.62	0.27	-0.29	5.32e-03	-2.62e-02	-0.28
32	17	1259	0.28	-1.11	-0.77	-6.32e-02	0.60	0.13	-8.90e-02	4.05e-02	4.15e-03	-0.11
32	17	1260	0.17	-1.13	-0.78	-0.17	0.57	0.28	-0.27	7.13e-03	-8.11e-04	-0.27
32	17	1261	0.24	-1.07	-0.77	-5.67e-02	0.55	0.12	-9.54e-02	2.11e-02	1.14e-03	-0.11
32	17	1262	0.15	-1.07	-0.76	-0.16	0.53	0.28	-0.27	6.44e-03	-1.14e-03	-0.28
32	17	1263	0.22	-1.02	-0.74	-6.58e-02	0.52	0.12	-0.10	1.57e-02	-9.34e-05	-0.11
32	17	1264	0.14	-1.00	-0.70	-0.15	0.50	0.28	-0.28	4.44e-03	-1.73e-03	-0.28
32	17	1265	0.14	-0.96	-0.66	-0.16	0.49	0.11	-0.10	1.00e-02	-1.28e-03	-0.11
32	17	1266	0.19	-0.88	-0.60	-9.50e-02	0.48	0.28	-0.28	4.29e-03	-1.85e-03	-0.28
32	17	1267	0.32	-0.78	-0.53	6.97e-02	0.46	0.11	-0.12	-9.03e-03	-3.94e-03	-0.12
32	17	1268	0.27	-0.75	-0.48	-4.33e-03	0.45	0.31	-0.28	4.69e-03	2.55e-02	-0.30
32	17	1269	0.20	-0.75	-0.46	-8.94e-02	0.44	7.07e-02	-6.30e-02	7.74e-03	-5.11e-05	-6.68e-02
32	17	1270	0.24	-0.73	-0.46	-3.14e-02	0.43	0.29	-0.31	1.24e-03	-2.68e-02	-0.30
32	17	1271	0.25	-0.67	-0.38	-3.05e-02	0.43	0.13	-0.10	2.72e-02	4.13e-03	-0.12
32	17	1272	0.29	-0.59	-0.28	-1.92e-02	0.42	0.29	-0.28	2.28e-03	4.91e-04	-0.29
32	17	1273	0.32	-0.53	-0.19	-1.38e-02	0.42	0.12	-0.11	6.87e-03	1.32e-03	-0.11
32	17	1274	0.38	-0.45	-6.43e-02	-6.34e-03	0.41	0.29	-0.29	1.70e-03	4.50e-04	-0.29
32	17	1275	0.44	-0.39	5.64e-02	-1.38e-02	0.41	0.11	-0.11	7.92e-04	2.71e-04	-0.11
32	17	1276	0.48	-0.35	0.13	4.48e-03	0.41	0.29	-0.29	-5.08e-04	-3.98e-05	-0.29
32	17	1277	0.54	-0.33	0.22	-2.83e-03	0.42	0.11	-0.11	-4.08e-03	-5.23e-04	-0.11
32	17	1278	0.61	-0.28	0.31	2.00e-02	0.42	0.28	-0.29	-3.29e-03	-5.38e-04	-0.29
32	17	1279	0.71	-0.22	0.43	6.43e-02	0.43	0.10	-0.13	-2.91e-02	-4.38e-03	-0.12
32	17	1280	0.77	-0.22	0.52	3.19e-02	0.43	0.31	-0.28	3.42e-05	2.71e-02	-0.30
32	17	1281	0.79	-0.16	0.50	0.13	0.44	6.21e-02	-7.21e-02	-9.69e-03	-3.77e-04	-6.69e-02
32	17	1282	0.76	-0.27	0.49	4.26e-03	0.45	0.28	-0.31	-5.42e-03	-2.56e-02	-0.30
32	17	1283	0.83	-0.21	0.54	6.91e-02	0.46	0.12	-0.11	1.04e-02	4.24e-03	-0.12
32	17	1284	0.89	-0.19	0.60	9.77e-02	0.48	0.28	-0.28	-4.17e-03	1.92e-03	-0.28
32	17	1285	0.96	-0.14	0.66	0.16	0.49	0.10	-0.11	-9.89e-03	1.38e-03	-0.11
32	17	1286	1.00	-0.14	0.71	0.16	0.50	0.28	-0.28	-4.51e-03	1.79e-03	-0.28
32	17	1287	1.02	-0.21	0.74	6.91e-02	0.52	0.10	-0.12	-1.57e-02	1.87e-04	-0.11
32	17	1288	1.08	-0.15	0.77	0.16	0.53	0.27	-0.28	-6.52e-03	1.19e-03	-0.28
32	17	1289	1.08	-0.24	0.78	6.00e-02	0.55	9.54e-02	-0.12	-2.12e-02	-1.07e-03	-0.11
32	17	1290	1.13	-0.17	0.79	0.18	0.57	0.27	-0.28	-7.28e-03	8.42e-04	-0.27
32	17	1291	1.11	-0.27	0.77	6.58e-02	0.60	8.86e-02	-0.13	-4.13e-02	-4.21e-03	-0.11
32	17	1292	1.15	-0.20	0.75	0.20	0.62	0.29	-0.27	-5.50e-03	2.62e-02	-0.28
32	17	1293	0.98	-0.53	0.62	-0.16	0.65	5.36e-02	-7.13e-02	-1.78e-02	9.53e-05	-6.18e-02
32	17	1294	0.94	-0.55	0.52	-0.13	0.67	0.26	-0.29	-8.06e-03	-2.31e-02	-0.28
32	17	1295	0.82	-0.85	0.46	-0.49	0.68	0.11	-0.11	-4.29e-03	3.32e-03	-0.11
32	17	1296	0.95	-0.60	0.49	-0.14	0.71	0.26	-0.26	-8.51e-03	2.49e-03	-0.26
32	17	1297	0.86	-0.92	0.51	-0.57	0.71	8.81e-02	-0.11	-2.41e-02	7.95e-04	-9.89e-02
32	17	1298	1.03	-0.57	0.61	-0.15	0.70	0.25	-0.26	-1.43e-02	2.37e-03	-0.26
32	17	1299	1.01	-0.90	0.72	-0.61	0.69	7.41e-02	-0.12	-4.74e-02	-8.38e-04	-9.54e-02
32	17	1300	1.13	-0.64	0.88	-0.39	0.62	0.25	-0.24	2.38e-03	8.34e-03	-0.25
32	17	1301	1.17	-0.61	1.10	-0.54	0.33	7.85e-02	-0.14	-6.57e-02	5.69e-03	-0.10
32	17	1302	1.38	-0.67	1.34	-0.64	0.25	0.13	-0.41	-0.27	-5.60e-03	-0.23
32	17	1303	1.31	-1.56	1.25	-1.50	0.41	-0.32	-2.11	-2.10	-0.32	4.11e-02
32	17	1304	2.70	-0.78	-0.62	2.54	0.72	1.55	0.31	1.55	0.31	-1.66e-02
32	17	1305	1.31	-1.13	-0.84	1.03	0.78	0.36	-0.13	0.21	2.40e-02	-0.23
32	17	1306	1.45	-1.06	-0.65	1.03	0.93	0.13	-6.22e-02	5.63e-02	8.18e-03	-9.14e-02
32	17	1307	1.18	-1.26	-0.65	0.57	1.06	0.25	-0.25	3.41e-03	3.14e-04	-0.25
32	17	1308	1.56	-1.21	-0.59	0.94	1.15	0.12	-6.95e-02	4.08e-02	9.84e-03	-9.36e-02
32	17	1309	1.31	-1.40	-0.64	0.56	1.21	0.27	-0.25	1.39e-02	4.07e-03	-0.26
32	17	1310	1.53	-1.32	-0.60	0.81	1.23	0.11	-8.45e-02	2.25e-02	5.89e-03	-9.84e-02
32	17	1311	1.29	-1.44	-0.64	0.49	1.24	0.27	-0.26	5.15e-03	1.11e-03	-0.27
32	17	1312	1.40	-1.38	-0.65	0.68	1.22	0.11	-9.42e-02	9.13e-03	4.25e-03	-0.10
32	17	1313	0.91	-1.60	-0.71	1.43e-02	1.20	0.28	-0.26	5.90e-03	8.46e-03	-0.27
32	17	1314	0.52	-1.83	-0.74	-0.58	1.17	0.11	-9.33e-02	1.66e-02	3.92e-03	-0.10
32	17	1315	0.61	-1.71	-0.79	-0.31	1.14	0.28	-0.27	8.89e-03	-4.70e-03	-0.27

32	17	1316	0.49	-1.73	-0.80	-0.43	1.09	0.12	-8.76e-02	3.00e-02	4.59e-03	-0.10
32	17	1317	0.55	-1.64	-0.83	-0.26	1.06	0.29	-0.27	1.13e-02	3.01e-03	-0.28
32	17	1318	0.45	-1.64	-0.81	-0.38	1.02	0.12	-9.55e-02	1.73e-02	3.55e-03	-0.11
32	17	1319	0.51	-1.55	-0.80	-0.24	0.99	0.29	-0.28	6.65e-03	1.19e-03	-0.28
32	17	1320	0.43	-1.54	-0.75	-0.36	0.97	0.12	-9.93e-02	1.39e-02	2.74e-03	-0.11
32	17	1321	0.49	-1.45	-0.73	-0.23	0.94	0.29	-0.28	5.14e-03	8.48e-04	-0.29
32	17	1322	0.43	-1.44	-0.67	-0.34	0.92	0.11	-0.10	1.02e-02	1.93e-03	-0.11
32	17	1323	0.51	-1.34	-0.62	-0.21	0.90	0.29	-0.29	6.23e-04	-9.01e-04	-0.29
32	17	1324	0.66	-1.20	-0.56	1.85e-02	0.88	0.11	-0.11	-2.30e-03	1.18e-03	-0.11
32	17	1325	0.54	-1.23	-0.52	-0.17	0.87	0.29	-0.29	1.84e-03	7.45e-03	-0.29
32	17	1326	0.54	-1.19	-0.46	-0.20	0.85	0.11	-0.11	7.00e-03	1.45e-03	-0.11
32	17	1327	0.62	-1.09	-0.40	-7.63e-02	0.84	0.29	-0.29	4.67e-03	-6.25e-03	-0.29
32	17	1328	0.62	-1.04	-0.33	-8.75e-02	0.82	0.12	-0.10	1.80e-02	1.92e-03	-0.11
32	17	1329	0.67	-0.97	-0.26	-4.12e-02	0.81	0.30	-0.29	6.36e-03	2.14e-03	-0.29
32	17	1330	0.69	-0.93	-0.19	-5.00e-02	0.81	0.11	-0.11	4.77e-03	1.06e-03	-0.11
32	17	1331	0.74	-0.87	-0.11	-2.32e-02	0.80	0.29	-0.29	1.25e-03	3.24e-04	-0.29
32	17	1332	0.80	-0.81	8.37e-03	-1.77e-02	0.80	0.11	-0.11	9.99e-04	3.01e-04	-0.11
32	17	1333	0.87	-0.73	0.12	2.09e-02	0.80	0.29	-0.29	-6.25e-04	-9.10e-05	-0.29
32	17	1334	0.95	-0.68	0.21	5.23e-02	0.81	0.11	-0.11	-2.43e-03	-4.34e-04	-0.11
32	17	1335	1.00	-0.67	0.29	4.34e-02	0.82	0.29	-0.30	-6.63e-03	-2.14e-03	-0.29
32	17	1336	1.07	-0.61	0.37	8.79e-02	0.83	9.94e-02	-0.12	-1.99e-02	-2.37e-03	-0.11
32	17	1337	1.13	-0.60	0.45	7.49e-02	0.85	0.29	-0.29	-3.78e-03	6.41e-03	-0.29
32	17	1338	1.21	-0.53	0.49	0.19	0.86	0.11	-0.12	-8.72e-03	-1.98e-03	-0.11
32	17	1339	1.24	-0.53	0.54	0.18	0.87	0.28	-0.29	-2.32e-03	-7.66e-03	-0.29
32	17	1340	1.27	-0.54	0.58	0.16	0.88	0.11	-0.11	3.44e-03	-9.88e-04	-0.11
32	17	1341	1.34	-0.50	0.63	0.21	0.90	0.29	-0.29	-5.96e-04	8.68e-04	-0.29
32	17	1342	1.45	-0.42	0.67	0.35	0.92	0.10	-0.11	-1.02e-02	-1.96e-03	-0.11
32	17	1343	1.46	-0.49	0.73	0.24	0.94	0.28	-0.29	-5.21e-03	-9.03e-04	-0.29
32	17	1344	1.55	-0.42	0.76	0.37	0.97	9.93e-02	-0.12	-1.39e-02	-2.80e-03	-0.11
32	17	1345	1.55	-0.50	0.80	0.25	0.99	0.28	-0.29	-6.76e-03	-1.27e-03	-0.28
32	17	1346	1.64	-0.45	0.81	0.39	1.02	9.54e-02	-0.12	-1.75e-02	-3.66e-03	-0.11
32	17	1347	1.64	-0.54	0.83	0.27	1.06	0.27	-0.29	-1.14e-02	-3.11e-03	-0.28
32	17	1348	1.73	-0.49	0.81	0.43	1.09	8.71e-02	-0.12	-3.07e-02	-4.84e-03	-0.10
32	17	1349	1.71	-0.61	0.80	0.31	1.14	0.27	-0.28	-9.28e-03	4.53e-03	-0.27
32	17	1350	1.84	-0.51	0.74	0.58	1.17	9.35e-02	-0.11	-1.63e-02	-3.91e-03	-0.10
32	17	1351	1.61	-0.90	0.72	-1.43e-02	1.20	0.26	-0.28	-5.54e-03	-8.40e-03	-0.27
32	17	1352	1.62	-0.89	0.65	7.08e-02	1.22	9.42e-02	-0.11	-9.02e-03	-4.28e-03	-0.10
32	17	1353	1.45	-1.29	0.65	-0.49	1.24	0.26	-0.27	-5.28e-03	-1.20e-03	-0.27
32	17	1354	1.32	-1.53	0.61	-0.82	1.24	8.44e-02	-0.11	-2.27e-02	-6.00e-03	-9.84e-02
32	17	1355	1.40	-1.31	0.65	-0.56	1.22	0.25	-0.27	-1.40e-02	-4.16e-03	-0.26
32	17	1356	1.21	-1.56	0.60	-0.95	1.15	6.93e-02	-0.12	-4.11e-02	-9.97e-03	-9.36e-02
32	17	1357	1.26	-1.19	0.65	-0.58	1.06	0.25	-0.25	-3.36e-03	-3.58e-04	-0.25
32	17	1358	1.06	-1.45	0.64	-1.04	0.93	6.21e-02	-0.13	-5.64e-02	-8.26e-03	-9.13e-02
32	17	1359	1.12	-1.32	0.84	-1.03	0.78	0.13	-0.37	-0.21	-2.41e-02	-0.23
32	17	1360	0.77	-2.71	0.61	-2.55	0.73	-0.31	-1.55	-1.55	-0.31	-1.67e-02
32	17	1361	2.71	-0.96	-0.60	2.34	1.09	1.00	0.17	1.00	0.17	5.24e-03
32	17	1362	1.76	-1.22	-0.67	1.21	1.15	0.30	-0.15	0.13	1.77e-02	-0.22
32	17	1363	1.82	-1.37	-0.53	0.98	1.40	0.12	-6.95e-02	3.98e-02	6.09e-03	-9.09e-02
32	17	1364	1.74	-1.72	-0.58	0.60	1.63	0.25	-0.25	4.45e-03	6.57e-04	-0.25
32	17	1365	1.97	-1.78	-0.65	0.84	1.72	0.12	-7.62e-02	3.12e-02	8.49e-03	-9.54e-02
32	17	1366	1.82	-2.02	-0.77	0.57	1.80	0.27	-0.25	1.20e-02	4.18e-03	-0.26
32	17	1367	1.94	-2.00	-0.79	0.73	1.82	0.11	-8.92e-02	1.86e-02	5.56e-03	-0.10
32	17	1368	1.60	-2.21	-0.85	0.24	1.83	0.27	-0.26	6.21e-03	1.86e-03	-0.27
32	17	1369	1.07	-2.55	-0.86	-0.62	1.80	0.11	-9.63e-02	9.47e-03	2.59e-03	-0.10
32	17	1370	1.24	-2.37	-0.91	-0.22	1.78	0.27	-0.27	5.44e-03	-5.74e-04	-0.27
32	17	1371	1.03	-2.46	-0.91	-0.52	1.74	0.11	-9.45e-02	1.43e-02	2.93e-03	-0.10
32	17	1372	1.09	-2.34	-0.93	-0.33	1.69	0.28	-0.27	8.73e-03	2.23e-03	-0.27
32	17	1373	1.00	-2.32	-0.92	-0.40	1.64	0.12	-9.21e-02	2.30e-02	4.23e-03	-0.11
32	17	1374	1.02	-2.22	-0.92	-0.28	1.59	0.28	-0.27	9.26e-03	9.41e-04	-0.28
32	17	1375	0.94	-2.19	-0.89	-0.36	1.54	0.12	-9.99e-02	1.45e-02	2.37e-03	-0.11
32	17	1376	0.97	-2.09	-0.87	-0.26	1.50	0.28	-0.28	6.17e-03	1.85e-04	-0.28
32	17	1377	0.90	-2.07	-0.82	-0.35	1.46	0.12	-0.10	1.16e-02	1.91e-03	-0.11
32	17	1378	0.94	-1.97	-0.78	-0.25	1.43	0.29	-0.28	5.24e-03	3.10e-04	-0.28
32	17	1379	0.89	-1.94	-0.71	-0.33	1.40	0.12	-0.11	8.50e-03	1.47e-03	-0.11
32	17	1380	0.95	-1.83	-0.66	-0.22	1.37	0.29	-0.28	2.20e-03	-2.90e-04	-0.29
32	17	1381	1.02	-1.73	-0.60	-0.11	1.35	0.11	-0.11	-2.53e-05	-2.63e-04	-0.11
32	17	1382	0.99	-1.70	-0.54	-0.18	1.33	0.29	-0.29	1.60e-03	-1.70e-03	-0.29
32	17	1383	1.00	-1.65	-0.46	-0.18	1.32	0.11	-0.11	5.91e-03	9.31e-04	-0.11
32	17	1384	1.06	-1.54	-0.39	-8.82e-02	1.29	0.29	-0.29	4.73e-03	1.87e-03	-0.29
32	17	1385	1.08	-1.49	-0.32	-8.68e-02	1.28	0.12	-0.10	1.30e-02	2.33e-03	-0.11
32	17	1386	1.12	-1.41	-0.25	-4.37e-02	1.26	0.29	-0.29	4.43e-03	6.73e-04	-0.29
32	17	1387	1.14	-1.37	-0.18	-5.03e-02	1.25	0.12	-0.11	4.20e-03	7.14e-04	-0.11
32	17	1388	1.19	-1.31	-9.29e-02	-2.22e-02	1.25	0.29	-0.29	7.79e-04	6.31e-05	-0.29
32	17	1389	1.25	-1.25	7.53e-03	-8.38e-03	1.25	0.11	-0.11	1.02e-03	3.94e-04	-0.11
32	17	1390	1.31	-1.19	0.10	2.00e-02	1.25	0.29	-0.29	-3.08e-04	3.00e-04	-0.29
32	17	1391	1.39	-1.14	0.19	4.89e-02	1.26	0.11	-0.12	-2.51e-03	-2.31e-04	-0.11
32	17	1392	1.44	-1.12	0.28	4.59e-02	1.28	0.29	-0.29	-4.05e-03	-4.49e-04	-0.29
32	17	1393	1.52	-1.07	0.36	8.71e-02	1.29	0.10	-0.12	-1.44e-02	-2.84e-03	-0.11
32	17	1394	1.57	-1.06	0.43	8.51e-02	1.30	0.29	-0.29	-4.64e-03	-2.26e-03	-0.29

32	17	1395	1.67	-0.99	0.50	0.18	1.32	0.11	-0.11	-7.09e-03	-1.39e-03	-0.11
32	17	1396	1.72	-0.97	0.57	0.18	1.33	0.29	-0.29	-1.74e-03	1.56e-03	-0.29
32	17	1397	1.81	-0.91	0.62	0.28	1.35	0.11	-0.11	8.12e-04	3.31e-04	-0.11
32	17	1398	1.84	-0.94	0.67	0.23	1.37	0.28	-0.29	-2.25e-03	1.50e-04	-0.29
32	17	1399	1.95	-0.88	0.73	0.33	1.40	0.11	-0.12	-8.46e-03	-1.59e-03	-0.11
32	17	1400	1.97	-0.93	0.79	0.25	1.43	0.28	-0.29	-5.30e-03	-4.65e-04	-0.28
32	17	1401	2.07	-0.89	0.83	0.35	1.46	0.10	-0.12	-1.16e-02	-2.07e-03	-0.11
32	17	1402	2.10	-0.96	0.87	0.26	1.50	0.28	-0.28	-6.30e-03	-3.95e-04	-0.28
32	17	1403	2.20	-0.93	0.90	0.37	1.54	9.98e-02	-0.12	-1.47e-02	-2.60e-03	-0.11
32	17	1404	2.22	-1.02	0.93	0.28	1.59	0.27	-0.28	-9.33e-03	-1.17e-03	-0.28
32	17	1405	2.33	-0.99	0.93	0.41	1.64	9.16e-02	-0.12	-2.37e-02	-4.63e-03	-0.11
32	17	1406	2.35	-1.08	0.93	0.33	1.69	0.27	-0.28	-9.25e-03	-2.62e-03	-0.27
32	17	1407	2.47	-1.03	0.91	0.52	1.74	9.46e-02	-0.11	-1.40e-02	-2.96e-03	-0.10
32	17	1408	2.38	-1.24	0.92	0.23	1.78	0.27	-0.27	-4.97e-03	6.79e-04	-0.27
32	17	1409	2.55	-1.06	0.87	0.62	1.80	9.63e-02	-0.11	-9.43e-03	-2.69e-03	-0.10
32	17	1410	2.21	-1.60	0.85	-0.24	1.83	0.26	-0.27	-6.40e-03	-2.08e-03	-0.27
32	17	1411	2.10	-1.74	0.80	-0.44	1.82	8.91e-02	-0.11	-1.87e-02	-5.77e-03	-0.10
32	17	1412	2.02	-1.82	0.77	-0.58	1.80	0.25	-0.27	-1.21e-02	-4.38e-03	-0.26
32	17	1413	1.78	-1.98	0.65	-0.85	1.72	7.60e-02	-0.12	-3.14e-02	-8.70e-03	-9.54e-02
32	17	1414	1.72	-1.75	0.58	-0.60	1.63	0.25	-0.25	-4.39e-03	-7.93e-04	-0.25
32	17	1415	1.36	-1.83	0.52	-0.99	1.41	6.94e-02	-0.12	-3.99e-02	-6.26e-03	-9.09e-02
32	17	1416	1.21	-1.77	0.67	-1.22	1.16	0.15	-0.30	-0.13	-1.80e-02	-0.22
32	17	1417	0.95	-2.72	0.59	-2.36	1.09	-0.17	-1.00	-1.00	-0.17	5.29e-03
32	17	1418	2.50	-1.07	-0.26	1.69	1.50	0.46	0.14	0.46	0.14	5.20e-04
32	17	1419	2.04	-1.41	-0.36	1.00	1.59	0.26	-0.17	6.81e-02	2.11e-02	-0.21
32	17	1420	2.02	-1.93	-0.53	0.63	1.89	9.91e-02	-6.65e-02	2.10e-02	1.16e-02	-8.27e-02
32	17	1421	2.07	-2.37	-0.76	0.46	2.14	0.25	-0.24	4.24e-03	4.74e-03	-0.24
32	17	1422	1.90	-2.65	-0.93	0.18	2.21	0.11	-7.67e-02	2.19e-02	7.04e-03	-9.09e-02
32	17	1423	2.09	-2.67	-1.02	0.44	2.27	0.26	-0.25	8.96e-03	2.48e-03	-0.26
32	17	1424	1.72	-2.93	-1.07	-0.14	2.28	0.11	-8.79e-02	1.57e-02	4.64e-03	-9.79e-02
32	17	1425	1.75	-2.92	-1.09	-7.29e-02	2.28	0.27	-0.26	7.31e-03	2.07e-03	-0.26
32	17	1426	1.62	-2.97	-1.11	-0.25	2.25	0.11	-9.22e-02	1.14e-02	3.61e-03	-9.96e-02
32	17	1427	1.61	-2.92	-1.11	-0.19	2.22	0.27	-0.26	6.85e-03	1.79e-03	-0.27
32	17	1428	1.50	-2.93	-1.12	-0.31	2.17	0.11	-9.21e-02	1.29e-02	3.54e-03	-0.10
32	17	1429	1.48	-2.85	-1.11	-0.26	2.12	0.28	-0.27	8.57e-03	1.52e-03	-0.27
32	17	1430	1.43	-2.78	-1.09	-0.25	2.06	0.11	-9.26e-02	1.64e-02	3.63e-03	-0.10
32	17	1431	1.41	-2.69	-1.06	-0.22	2.01	0.28	-0.27	8.27e-03	1.25e-03	-0.27
32	17	1432	1.37	-2.62	-1.02	-0.22	1.96	0.11	-9.75e-02	1.23e-02	2.89e-03	-0.10
32	17	1433	1.36	-2.53	-0.97	-0.20	1.91	0.28	-0.27	6.67e-03	1.35e-03	-0.28
32	17	1434	1.34	-2.46	-0.92	-0.21	1.87	0.11	-0.10	1.00e-02	2.69e-03	-0.11
32	17	1435	1.33	-2.38	-0.86	-0.19	1.83	0.28	-0.28	5.75e-03	1.53e-03	-0.28
32	17	1436	1.33	-2.31	-0.79	-0.20	1.80	0.11	-0.10	7.59e-03	2.44e-03	-0.11
32	17	1437	1.38	-2.20	-0.72	-0.10	1.76	0.28	-0.28	3.97e-03	1.51e-03	-0.28
32	17	1438	1.35	-2.16	-0.64	-0.17	1.74	0.11	-0.10	3.37e-03	1.60e-03	-0.11
32	17	1439	1.41	-2.06	-0.57	-8.05e-02	1.72	0.29	-0.28	2.87e-03	1.06e-03	-0.29
32	17	1440	1.41	-2.01	-0.49	-0.11	1.70	0.11	-0.10	5.18e-03	1.40e-03	-0.11
32	17	1441	1.44	-1.93	-0.42	-7.37e-02	1.68	0.29	-0.28	4.05e-03	5.29e-04	-0.29
32	17	1442	1.47	-1.86	-0.34	-5.62e-02	1.66	0.11	-0.10	7.58e-03	1.21e-03	-0.11
32	17	1443	1.50	-1.79	-0.26	-3.50e-02	1.64	0.29	-0.28	2.96e-03	-7.31e-06	-0.29
32	17	1444	1.54	-1.74	-0.17	-3.20e-02	1.64	0.11	-0.11	3.33e-03	3.29e-04	-0.11
32	17	1445	1.58	-1.69	-9.24e-02	-1.82e-02	1.63	0.29	-0.29	7.42e-04	-1.54e-04	-0.29
32	17	1446	1.63	-1.63	2.88e-03	-8.55e-03	1.63	0.11	-0.11	7.05e-04	-2.52e-05	-0.11
32	17	1447	1.69	-1.58	0.10	1.03e-02	1.63	0.29	-0.29	-4.01e-04	-7.48e-05	-0.29
32	17	1448	1.76	-1.53	0.19	3.17e-02	1.65	0.11	-0.11	-2.30e-03	-4.06e-04	-0.11
32	17	1449	1.82	-1.50	0.28	3.70e-02	1.66	0.29	-0.29	-2.55e-03	1.28e-05	-0.29
32	17	1450	1.89	-1.47	0.36	5.62e-02	1.67	0.10	-0.11	-8.40e-03	-1.41e-03	-0.11
32	17	1451	1.95	-1.44	0.45	6.95e-02	1.69	0.28	-0.29	-4.19e-03	-6.09e-04	-0.29
32	17	1452	2.03	-1.40	0.52	0.11	1.70	0.10	-0.11	-5.77e-03	-1.39e-03	-0.11
32	17	1453	2.07	-1.40	0.59	8.23e-02	1.72	0.28	-0.29	-2.82e-03	-9.44e-04	-0.29
32	17	1454	2.18	-1.34	0.67	0.17	1.74	0.11	-0.11	-2.93e-03	-1.49e-03	-0.11
32	17	1455	2.21	-1.37	0.73	0.11	1.77	0.28	-0.28	-3.98e-03	-1.53e-03	-0.28
32	17	1456	2.32	-1.32	0.80	0.20	1.80	0.10	-0.11	-7.56e-03	-2.45e-03	-0.11
32	17	1457	2.39	-1.33	0.87	0.20	1.83	0.28	-0.28	-5.76e-03	-1.55e-03	-0.28
32	17	1458	2.47	-1.33	0.93	0.21	1.87	0.10	-0.11	-1.00e-02	-2.72e-03	-0.11
32	17	1459	2.54	-1.35	0.98	0.20	1.91	0.27	-0.28	-6.73e-03	-1.39e-03	-0.28
32	17	1460	2.63	-1.37	1.03	0.23	1.96	9.75e-02	-0.11	-1.25e-02	-2.93e-03	-0.11
32	17	1461	2.70	-1.41	1.07	0.22	2.01	0.27	-0.28	-8.32e-03	-1.28e-03	-0.27
32	17	1462	2.78	-1.43	1.10	0.25	2.06	9.24e-02	-0.11	-1.68e-02	-3.75e-03	-0.10
32	17	1463	2.85	-1.47	1.12	0.26	2.12	0.27	-0.28	-8.86e-03	-1.58e-03	-0.27
32	17	1464	2.93	-1.49	1.12	0.32	2.17	9.21e-02	-0.11	-1.27e-02	-3.51e-03	-0.10
32	17	1465	2.93	-1.61	1.12	0.20	2.22	0.26	-0.27	-6.57e-03	-1.78e-03	-0.27
32	17	1466	2.98	-1.61	1.11	0.25	2.26	9.23e-02	-0.11	-1.14e-02	-3.62e-03	-9.97e-02
32	17	1467	2.92	-1.75	1.09	7.40e-02	2.28	0.26	-0.27	-7.39e-03	-2.11e-03	-0.26
32	17	1468	2.93	-1.72	1.07	0.14	2.28	8.79e-02	-0.11	-1.58e-02	-4.66e-03	-9.80e-02
32	17	1469	2.77	-1.93	1.02	-0.18	2.27	0.25	-0.26	-8.99e-03	-2.50e-03	-0.26
32	17	1470	2.65	-1.91	0.93	-0.18	2.21	7.67e-02	-0.11	-2.20e-02	-7.05e-03	-9.09e-02
32	17	1471	2.38	-2.08	0.76	-0.46	2.14	0.24	-0.25	-4.20e-03	-4.74e-03	-0.24
32	17	1472	1.93	-2.03	0.53	-0.63	1.89	6.66e-02	-9.92e-02	-2.11e-02	-1.16e-02	-8.28e-02
32	17	1473	1.41	-2.05	0.36	-1.00	1.59	0.17	-0.26	-6.83e-02	-2.11e-02	-0.21

32	17	1474	1.07	-2.51	0.26	-1.70	1.50	-0.14	-0.46	-0.46	-0.14	6.59e-04
32	17	1475	2.39	-1.85	-1.02	1.57	1.68	0.13	4.92e-02	7.10e-02	0.11	-3.68e-02
32	17	1476	1.96	-1.92	-0.79	0.83	1.77	0.30	-0.16	9.06e-02	4.98e-02	-0.23
32	17	1477	1.66	-2.63	-1.02	4.94e-02	2.08	0.16	-2.60e-02	0.11	3.22e-02	-8.78e-02
32	17	1478	1.55	-3.23	-1.37	-0.30	2.33	0.23	-0.25	-4.09e-04	-1.74e-02	-0.24
32	17	1479	1.62	-3.27	-1.36	-0.29	2.39	8.87e-02	-9.53e-02	5.91e-03	-1.25e-02	-9.15e-02
32	17	1480	1.65	-3.31	-1.34	-0.32	2.43	0.25	-0.26	-7.03e-04	-1.18e-02	-0.25
32	17	1481	1.68	-3.31	-1.35	-0.27	2.44	9.33e-02	-9.86e-02	6.08e-03	-1.13e-02	-9.55e-02
32	17	1482	1.67	-3.31	-1.35	-0.28	2.43	0.25	-0.26	-7.80e-04	-1.18e-02	-0.26
32	17	1483	1.67	-3.27	-1.37	-0.23	2.41	9.42e-02	-0.10	4.62e-03	-1.14e-02	-9.72e-02
32	17	1484	1.64	-3.23	-1.35	-0.24	2.37	0.26	-0.27	-6.37e-04	-1.16e-02	-0.26
32	17	1485	1.62	-3.16	-1.34	-0.20	2.32	9.65e-02	-0.10	6.15e-03	-1.05e-02	-9.83e-02
32	17	1486	1.58	-3.09	-1.31	-0.20	2.27	0.26	-0.27	-4.80e-05	-1.02e-02	-0.26
32	17	1487	1.56	-3.00	-1.28	-0.16	2.21	0.10	-0.10	7.10e-03	-8.63e-03	-0.10
32	17	1488	1.52	-2.91	-1.22	-0.16	2.15	0.26	-0.27	2.41e-04	-8.57e-03	-0.27
32	17	1489	1.51	-2.82	-1.17	-0.14	2.10	0.10	-0.10	4.78e-03	-7.66e-03	-0.10
32	17	1490	1.49	-2.73	-1.09	-0.15	2.05	0.27	-0.27	2.59e-04	-7.48e-03	-0.27
32	17	1491	1.48	-2.64	-1.02	-0.13	2.01	0.10	-0.11	4.48e-03	-6.64e-03	-0.10
32	17	1492	1.47	-2.55	-0.94	-0.15	1.97	0.27	-0.28	3.11e-04	-6.45e-03	-0.27
32	17	1493	1.48	-2.47	-0.86	-0.13	1.94	0.10	-0.11	4.04e-03	-5.65e-03	-0.11
32	17	1494	1.48	-2.39	-0.77	-0.14	1.91	0.27	-0.28	1.11e-04	-5.40e-03	-0.27
32	17	1495	1.51	-2.31	-0.69	-0.11	1.89	0.10	-0.11	1.13e-03	-4.94e-03	-0.11
32	17	1496	1.53	-2.23	-0.60	-0.10	1.86	0.28	-0.28	5.42e-05	-4.22e-03	-0.28
32	17	1497	1.56	-2.16	-0.52	-7.38e-02	1.84	0.11	-0.11	2.35e-03	-3.29e-03	-0.11
32	17	1498	1.58	-2.08	-0.44	-6.07e-02	1.82	0.28	-0.28	4.15e-04	-2.64e-03	-0.28
32	17	1499	1.61	-2.02	-0.36	-4.08e-02	1.81	0.11	-0.11	3.54e-03	-1.47e-03	-0.11
32	17	1500	1.64	-1.95	-0.28	-2.92e-02	1.79	0.28	-0.28	3.58e-04	-1.30e-03	-0.28
32	17	1501	1.67	-1.90	-0.20	-2.66e-02	1.78	0.11	-0.11	4.68e-04	-7.92e-04	-0.11
32	17	1502	1.71	-1.85	-0.12	-1.96e-02	1.78	0.28	-0.28	4.25e-05	-3.45e-04	-0.28
32	17	1503	1.77	-1.79	-6.32e-03	-7.48e-03	1.78	0.11	-0.11	-1.51e-04	1.13e-04	-0.11
32	17	1504	1.85	-1.72	0.12	5.74e-03	1.78	0.28	-0.28	-8.07e-05	5.58e-04	-0.28
32	17	1505	1.91	-1.68	0.21	2.76e-02	1.79	0.11	-0.11	-6.23e-04	9.80e-04	-0.11
32	17	1506	1.97	-1.65	0.30	3.08e-02	1.80	0.28	-0.28	-3.69e-04	1.42e-03	-0.28
32	17	1507	2.04	-1.61	0.39	4.19e-02	1.82	0.11	-0.11	-3.47e-03	1.48e-03	-0.11
32	17	1508	2.11	-1.58	0.47	5.56e-02	1.83	0.28	-0.28	-4.09e-04	2.60e-03	-0.28
32	17	1509	2.18	-1.55	0.55	7.52e-02	1.85	0.11	-0.11	-2.30e-03	3.25e-03	-0.11
32	17	1510	2.25	-1.52	0.63	0.10	1.86	0.28	-0.28	-4.01e-05	4.21e-03	-0.28
32	17	1511	2.32	-1.50	0.71	0.11	1.89	0.11	-0.10	-1.14e-03	4.97e-03	-0.11
32	17	1512	2.40	-1.48	0.79	0.14	1.91	0.28	-0.27	-9.74e-05	5.43e-03	-0.27
32	17	1513	2.48	-1.48	0.87	0.13	1.94	0.11	-0.10	-4.03e-03	5.68e-03	-0.11
32	17	1514	2.56	-1.46	0.95	0.15	1.97	0.28	-0.27	-2.97e-04	6.47e-03	-0.27
32	17	1515	2.65	-1.48	1.04	0.13	2.01	0.11	-0.10	-4.45e-03	6.67e-03	-0.10
32	17	1516	2.74	-1.48	1.11	0.15	2.05	0.27	-0.27	-2.42e-04	7.48e-03	-0.27
32	17	1517	2.83	-1.50	1.18	0.14	2.10	0.10	-0.10	-4.72e-03	7.66e-03	-0.10
32	17	1518	2.92	-1.52	1.24	0.16	2.15	0.27	-0.26	-2.13e-04	8.56e-03	-0.27
32	17	1519	3.01	-1.56	1.29	0.16	2.21	0.10	-0.10	-6.97e-03	8.60e-03	-0.10
32	17	1520	3.09	-1.58	1.31	0.20	2.27	0.27	-0.26	9.43e-05	1.01e-02	-0.26
32	17	1521	3.16	-1.62	1.34	0.20	2.32	0.10	-9.63e-02	-6.14e-03	1.05e-02	-9.82e-02
32	17	1522	3.23	-1.64	1.35	0.24	2.37	0.27	-0.26	6.69e-04	1.17e-02	-0.26
32	17	1523	3.27	-1.67	1.36	0.23	2.41	0.10	-9.42e-02	-4.58e-03	1.14e-02	-9.73e-02
32	17	1524	3.31	-1.68	1.35	0.28	2.43	0.26	-0.25	8.09e-04	1.18e-02	-0.26
32	17	1525	3.31	-1.69	1.35	0.27	2.44	9.86e-02	-9.33e-02	-5.99e-03	1.13e-02	-9.56e-02
32	17	1526	3.31	-1.65	1.34	0.32	2.43	0.26	-0.25	7.29e-04	1.18e-02	-0.25
32	17	1527	3.27	-1.62	1.36	0.29	2.39	9.53e-02	-8.86e-02	-5.81e-03	1.25e-02	-9.15e-02
32	17	1528	3.23	-1.56	1.37	0.30	2.33	0.25	-0.23	4.34e-04	1.74e-02	-0.24
32	17	1529	2.63	-1.66	1.02	-4.97e-02	2.08	2.61e-02	-0.16	-0.11	-3.20e-02	-8.78e-02
32	17	1530	1.92	-1.96	0.79	-0.83	1.77	0.16	-0.30	-9.10e-02	-4.97e-02	-0.23
32	17	1531	1.85	-2.40	1.02	-1.57	1.68	-4.96e-02	-0.13	-7.13e-02	-0.11	-3.67e-02

M_G			**N max**	**N min**	**N 1**	**N 2**	**N 1-2**	**M max**	**M min**	**M 1**	**M 2**	**M 1-2**
				-3.31	-2.84	-2.55	-0.16		-2.82	-2.82	-0.33	-0.30
			3.31		2.84	2.54	2.44	2.82		2.82	0.33	0.04

Macro	Tipo	Angolo 1-X (gradi)
33	**Guscio**	**0.0**

M_G	**CDC**	**Nodo**	**N max**	**N min**	**N 1**	**N 2**	**N 1-2**	**M max**	**M min**	**M 1**	**M 2**	**M 1-2**
			kN/ m	kN/ m	kN/ m	kN/ m	kN/ m	kN	kN	kN	kN	kN
33	17	1954	1.40	0.41	0.91	0.90	0.50	2.55	0.30	2.54	0.30	-4.40e-02
33	17	1955	1.04	0.10	0.99	0.16	0.22	0.49	-0.15	0.32	2.36e-02	-0.28
33	17	1956	1.53	0.29	1.48	0.34	0.24	0.16	-8.47e-02	7.70e-02	-2.49e-03	-0.12
33	17	1957	1.83	9.87e-03	1.72	0.11	0.42	0.25	-0.24	1.55e-02	-2.39e-03	-0.24
33	17	1958	1.98	0.21	1.84	0.35	0.47	0.12	-8.79e-02	3.62e-02	-6.42e-05	-0.10
33	17	1959	2.07	-5.63e-02	1.92	9.52e-02	0.55	0.25	-0.24	1.03e-02	-1.33e-03	-0.24
33	17	1960	2.10	0.12	1.95	0.27	0.53	0.12	-9.40e-02	2.57e-02	3.70e-04	-0.11
33	17	1961	2.18	-0.12	2.04	2.14e-02	0.56	0.25	-0.24	1.04e-02	-5.82e-05	-0.25

33	17	1962	2.21	6.17e-02	2.07	0.20	0.53	0.14	-0.10	3.66e-02	6.14e-04	-0.12
33	17	1963	0.54	-0.54	-1.39e-03	-1.62e-03	0.54	0.25	-0.31	-7.80e-02	1.24e-02	-0.28
33	17	1964	0.58	-0.49	-6.61e-02	0.16	0.52	3.69e-02	-1.69e-02	1.97e-02	3.27e-04	-2.51e-02
33	17	1965	0.53	-0.49	2.86e-02	9.43e-03	0.51	0.32	-0.25	9.13e-02	-1.40e-02	-0.28
33	17	1966	0.25	-2.08	-1.98	0.15	0.49	0.13	-0.11	1.52e-02	2.32e-03	-0.12
33	17	1967	0.11	-2.08	-1.97	-1.74e-03	0.48	0.26	-0.26	6.08e-03	-9.15e-04	-0.26
33	17	1968	0.24	-2.02	-1.91	0.14	0.46	0.13	-0.10	2.35e-02	1.77e-03	-0.11
33	17	1969	0.11	-1.97	-1.86	-9.37e-04	0.46	0.26	-0.26	6.59e-03	-2.79e-04	-0.26
33	17	1970	9.01e-02	-1.89	-1.79	-1.69e-02	0.45	0.12	-0.11	1.83e-02	7.97e-04	-0.11
33	17	1971	0.11	-1.81	-1.70	1.56e-03	0.44	0.27	-0.26	4.00e-03	-9.87e-04	-0.26
33	17	1972	9.16e-02	-1.70	-1.59	-2.16e-02	0.44	0.12	-0.11	1.27e-02	-1.73e-04	-0.12
33	17	1973	0.12	-1.58	-1.46	3.46e-03	0.43	0.27	-0.26	5.29e-03	-9.60e-05	-0.27
33	17	1974	0.11	-1.46	-1.34	-2.06e-02	0.43	0.14	-0.12	2.43e-02	-2.44e-04	-0.13
33	17	1975	0.14	-1.34	-1.20	1.18e-03	0.43	0.26	-0.34	-8.77e-02	1.36e-02	-0.30
33	17	1976	0.31	-0.58	-0.24	-3.23e-02	0.43	3.17e-02	-2.27e-02	8.89e-03	1.73e-04	-2.68e-02
33	17	1977	0.47	-0.37	9.32e-02	1.26e-02	0.42	0.34	-0.26	9.30e-02	-1.45e-02	-0.30
33	17	1978	0.36	-0.47	-9.33e-02	-1.67e-02	0.41	0.13	-0.13	-2.40e-03	1.40e-03	-0.13
33	17	1979	0.45	-0.36	8.29e-02	3.12e-03	0.41	0.27	-0.27	9.35e-04	-3.42e-04	-0.27
33	17	1980	0.44	-0.38	5.08e-02	7.01e-03	0.41	0.12	-0.11	7.13e-03	9.09e-04	-0.12
33	17	1981	0.56	-0.29	0.28	-3.01e-04	0.40	0.27	-0.27	1.01e-03	-8.94e-04	-0.27
33	17	1982	0.67	-0.24	0.42	1.15e-02	0.41	0.12	-0.12	1.93e-03	9.39e-05	-0.12
33	17	1983	0.74	-0.24	0.52	-5.99e-03	0.41	0.27	-0.28	-4.22e-03	-7.01e-04	-0.27
33	17	1984	0.95	-0.18	0.75	1.63e-02	0.43	0.11	-0.12	-6.07e-03	-1.06e-04	-0.11
33	17	1985	1.00	-0.24	0.80	-3.48e-02	0.46	0.29	-0.27	1.17e-02	6.39e-03	-0.28
33	17	1986	0.89	-0.20	0.61	8.18e-02	0.48	0.12	-0.12	-5.21e-04	-1.70e-03	-0.12
33	17	1987	0.55	-0.37	5.24e-02	0.13	0.46	0.26	-0.35	-0.10	9.92e-03	-0.30
33	17	1988	0.54	-0.35	0.16	3.08e-02	0.44	2.35e-02	-3.25e-02	-8.28e-03	-7.09e-04	-2.77e-02
33	17	1989	1.04	-0.18	0.86	-4.07e-03	0.42	0.34	-0.26	8.94e-02	-1.32e-02	-0.30
33	17	1990	1.21	-0.13	1.06	1.48e-02	0.42	0.12	-0.14	-2.32e-02	4.06e-04	-0.13
33	17	1991	1.38	-0.14	1.26	-7.16e-03	0.42	0.26	-0.27	-4.72e-03	1.49e-04	-0.27
33	17	1992	1.55	-9.94e-02	1.43	2.13e-02	0.43	0.11	-0.12	-1.30e-02	2.47e-04	-0.11
33	17	1993	1.70	-0.12	1.59	-3.42e-03	0.44	0.26	-0.27	-3.92e-03	1.09e-03	-0.26
33	17	1994	1.81	-9.22e-02	1.71	1.71e-02	0.44	0.10	-0.12	-1.85e-02	-6.79e-04	-0.11
33	17	1995	1.92	-0.11	1.81	6.24e-05	0.45	0.26	-0.26	-6.44e-03	3.79e-04	-0.26
33	17	1996	1.98	-0.24	1.88	-0.14	0.46	0.10	-0.13	-2.37e-02	-1.63e-03	-0.11
33	17	1997	2.07	-0.11	1.96	1.69e-03	0.47	0.26	-0.26	-6.17e-03	1.09e-03	-0.26
33	17	1998	2.08	-0.26	1.98	-0.15	0.49	0.11	-0.13	-1.62e-02	-2.24e-03	-0.12
33	17	1999	0.49	-0.53	-2.95e-02	-6.79e-03	0.51	0.25	-0.32	-9.14e-02	1.37e-02	-0.28
33	17	2000	0.48	-0.58	6.55e-02	-0.17	0.52	1.70e-02	-3.66e-02	-1.94e-02	-2.20e-04	-2.50e-02
33	17	2001	0.54	-0.54	6.34e-05	-6.85e-04	0.54	0.31	-0.25	7.82e-02	-1.20e-02	-0.28
33	17	2002	-6.63e-02	-2.22	-2.08	-0.21	0.53	0.10	-0.14	-3.62e-02	-4.77e-04	-0.12
33	17	2003	0.12	-2.18	-2.04	-1.98e-02	0.55	0.24	-0.25	-1.05e-02	7.70e-05	-0.25
33	17	2004	-0.12	-2.10	-1.94	-0.27	0.53	9.37e-02	-0.12	-2.58e-02	-2.69e-04	-0.11
33	17	2005	5.71e-02	-2.06	-1.91	-9.28e-02	0.54	0.24	-0.25	-1.04e-02	1.41e-03	-0.24
33	17	2006	-0.21	-1.96	-1.82	-0.34	0.47	8.77e-02	-0.12	-3.63e-02	1.51e-04	-0.10
33	17	2007	-5.44e-03	-1.80	-1.70	-0.11	0.42	0.24	-0.25	-1.56e-02	2.48e-03	-0.24
33	17	2008	-0.29	-1.51	-1.46	-0.34	0.24	8.46e-02	-0.16	-7.72e-02	2.52e-03	-0.12
33	17	2009	-9.71e-02	-1.03	-0.97	-0.15	0.22	0.15	-0.49	-0.32	-2.37e-02	-0.28
33	17	2010	-0.40	-1.38	-0.90	-0.88	0.49	-0.30	-2.54	-2.54	-0.30	-4.39e-02
33	17	2011	1.47	0.24	0.68	1.02	0.59	1.90	0.28	1.90	0.28	1.57e-02
33	17	2012	0.92	9.94e-02	0.68	0.34	0.38	0.36	-0.15	0.20	-8.58e-04	-0.23
33	17	2013	1.17	1.68e-02	0.92	0.27	0.48	0.17	-5.81e-02	0.11	6.56e-03	-0.10
33	17	2014	1.47	-0.25	1.08	0.14	0.72	0.26	-0.24	1.74e-02	-2.75e-03	-0.25
33	17	2015	1.67	-0.17	1.20	0.31	0.81	0.12	-8.42e-02	3.32e-02	1.18e-03	-0.10
33	17	2016	1.77	-0.38	1.27	0.13	0.91	0.26	-0.25	9.72e-03	-1.63e-03	-0.25
33	17	2017	1.85	-0.25	1.31	0.29	0.91	0.12	-9.06e-02	2.34e-02	1.17e-03	-0.10
33	17	2018	1.87	-0.38	1.36	0.13	0.94	0.26	-0.26	8.49e-03	-1.27e-03	-0.26
33	17	2019	1.88	-0.28	1.38	0.23	0.92	0.11	-0.11	3.30e-03	-1.88e-03	-0.11
33	17	2020	1.88	-0.37	1.41	9.65e-02	0.92	0.29	-0.26	1.17e-02	2.24e-02	-0.27
33	17	2021	1.84	-0.30	1.37	0.17	0.89	7.96e-02	-6.16e-02	1.73e-02	6.91e-04	-7.01e-02
33	17	2022	0.93	-0.82	2.47e-02	8.40e-02	0.88	0.27	-0.29	1.21e-03	-2.42e-02	-0.28
33	17	2023	0.92	-0.80	-2.96e-03	0.13	0.85	0.14	-8.91e-02	4.25e-02	5.92e-03	-0.11
33	17	2024	0.88	-0.80	1.23e-02	6.99e-02	0.84	0.27	-0.27	7.14e-03	6.47e-05	-0.27
33	17	2025	0.50	-1.63	-1.24	0.11	0.82	0.12	-9.77e-02	2.09e-02	2.26e-03	-0.11
33	17	2026	0.44	-1.59	-1.20	4.39e-02	0.81	0.28	-0.27	6.21e-03	-4.01e-04	-0.27
33	17	2027	0.49	-1.53	-1.14	9.80e-02	0.79	0.12	-0.10	1.61e-02	1.02e-03	-0.11
33	17	2028	0.44	-1.48	-1.07	3.98e-02	0.78	0.28	-0.27	4.07e-03	-1.14e-03	-0.28
33	17	2029	0.47	-1.40	-0.99	5.56e-02	0.78	0.12	-0.11	1.10e-02	-1.89e-04	-0.11
33	17	2030	0.47	-1.33	-0.90	3.48e-02	0.77	0.28	-0.28	3.67e-03	-1.40e-03	-0.28
33	17	2031	0.50	-1.25	-0.81	4.86e-02	0.76	0.11	-0.12	-9.83e-03	-3.48e-03	-0.12
33	17	2032	0.51	-1.17	-0.69	2.94e-02	0.76	0.31	-0.28	8.53e-03	2.43e-02	-0.29
33	17	2033	0.71	-0.81	-0.13	3.73e-02	0.75	7.89e-02	-7.09e-02	7.78e-03	2.58e-04	-7.48e-02
33	17	2034	0.80	-0.70	6.35e-02	3.25e-02	0.75	0.28	-0.31	-3.30e-03	-2.53e-02	-0.29
33	17	2035	0.73	-0.76	-4.89e-02	2.14e-02	0.74	0.14	-0.10	2.91e-02	4.88e-03	-0.12
33	17	2036	0.80	-0.68	0.11	1.47e-02	0.74	0.28	-0.28	1.91e-03	4.00e-04	-0.28
33	17	2037	0.85	-0.64	0.18	2.85e-02	0.74	0.12	-0.11	6.94e-03	1.32e-03	-0.11
33	17	2038	0.90	-0.61	0.30	3.27e-04	0.74	0.28	-0.29	-8.68e-05	-1.11e-03	-0.28
33	17	2039	1.03	-0.53	0.49	1.71e-02	0.75	0.11	-0.11	-6.10e-04	5.05e-05	-0.11
33	17	2040	1.16	-0.50	0.68	-2.84e-02	0.75	0.29	-0.28	4.54e-03	2.68e-03	-0.29

33	17	2041	1.17	-0.48	0.67	1.60e-02	0.76	0.10	-0.11	-1.11e-02	-1.33e-03	-0.11
33	17	2042	1.25	-0.48	0.78	-1.38e-02	0.77	0.30	-0.28	1.60e-02	7.04e-03	-0.29
33	17	2043	0.91	-0.65	0.23	3.11e-02	0.78	9.88e-02	-0.13	-2.90e-02	-4.97e-03	-0.12
33	17	2044	0.62	-0.96	-0.36	2.04e-02	0.77	0.29	-0.30	-1.98e-02	1.61e-02	-0.30
33	17	2045	0.75	-0.77	2.05e-02	-4.42e-02	0.76	7.37e-02	-7.61e-02	-2.44e-03	4.23e-05	-7.49e-02
33	17	2046	0.69	-0.81	-8.88e-02	-2.80e-02	0.75	0.28	-0.31	-6.71e-03	-2.36e-02	-0.29
33	17	2047	0.76	-0.75	9.61e-02	-8.84e-02	0.75	0.12	-0.11	1.09e-02	3.73e-03	-0.12
33	17	2048	1.19	-0.50	0.72	-3.29e-02	0.75	0.28	-0.28	-2.89e-03	1.57e-03	-0.28
33	17	2049	1.28	-0.51	0.85	-8.87e-02	0.76	0.11	-0.12	-1.13e-02	2.33e-04	-0.11
33	17	2050	1.39	-0.46	0.97	-3.82e-02	0.77	0.27	-0.28	-4.03e-03	1.26e-03	-0.28
33	17	2051	1.46	-0.49	1.06	-0.10	0.78	0.10	-0.12	-1.62e-02	-9.13e-04	-0.11
33	17	2052	1.55	-0.44	1.15	-4.18e-02	0.80	0.27	-0.28	-6.01e-03	5.39e-04	-0.27
33	17	2053	1.59	-0.50	1.21	-0.11	0.81	9.79e-02	-0.12	-2.09e-02	-2.13e-03	-0.11
33	17	2054	1.67	-0.46	1.27	-6.59e-02	0.83	0.27	-0.27	-7.49e-03	5.54e-05	-0.27
33	17	2055	0.78	-0.92	-6.84e-03	-0.13	0.85	8.91e-02	-0.14	-4.35e-02	-5.98e-03	-0.11
33	17	2056	0.82	-0.93	-3.48e-02	-7.69e-02	0.87	0.29	-0.27	-1.22e-03	2.38e-02	-0.28
33	17	2057	0.30	-1.83	-1.37	-0.17	0.88	6.15e-02	-7.90e-02	-1.69e-02	-5.54e-04	-6.97e-02
33	17	2058	0.36	-1.88	-1.42	-9.94e-02	0.90	0.26	-0.29	-1.16e-02	-2.18e-02	-0.27
33	17	2059	0.27	-1.87	-1.37	-0.23	0.91	0.11	-0.11	-3.02e-03	2.07e-03	-0.11
33	17	2060	0.37	-1.85	-1.35	-0.13	0.93	0.26	-0.26	-8.29e-03	1.37e-03	-0.26
33	17	2061	0.24	-1.83	-1.30	-0.29	0.90	9.07e-02	-0.12	-2.37e-02	-1.09e-03	-0.10
33	17	2062	0.37	-1.75	-1.26	-0.12	0.90	0.25	-0.26	-9.80e-03	1.73e-03	-0.25
33	17	2063	0.16	-1.65	-1.18	-0.31	0.80	8.44e-02	-0.12	-3.32e-02	-1.07e-03	-0.10
33	17	2064	0.25	-1.45	-1.06	-0.14	0.71	0.24	-0.26	-1.77e-02	2.88e-03	-0.25
33	17	2065	-1.49e-02	-1.16	-0.91	-0.27	0.47	5.85e-02	-0.17	-0.11	-6.50e-03	-0.10
33	17	2066	-9.47e-02	-0.91	-0.67	-0.34	0.37	0.15	-0.36	-0.20	6.15e-04	-0.23
33	17	2067	-0.23	-1.44	-0.66	-1.00	0.58	-0.28	-1.90	-1.90	-0.28	1.60e-02
33	17	2068	1.78	8.88e-02	0.59	1.28	0.78	1.39	0.27	1.39	0.27	-3.09e-02
33	17	2069	1.26	-0.12	0.54	0.59	0.69	0.32	-0.15	0.16	9.76e-03	-0.23
33	17	2070	1.48	-0.49	0.66	0.32	0.97	0.15	-4.92e-02	8.82e-02	1.13e-02	-9.12e-02
33	17	2071	1.82	-0.83	0.72	0.27	1.31	0.26	-0.24	1.88e-02	1.29e-03	-0.25
33	17	2072	2.00	-0.92	0.76	0.33	1.44	0.12	-8.24e-02	2.86e-02	4.17e-03	-9.80e-02
33	17	2073	2.14	-1.08	0.80	0.27	1.59	0.27	-0.26	9.29e-03	7.69e-04	-0.26
33	17	2074	2.20	-1.08	0.81	0.31	1.62	0.11	-8.93e-02	2.10e-02	3.24e-03	-0.10
33	17	2075	2.21	-1.16	0.82	0.23	1.66	0.27	-0.26	5.30e-03	-3.34e-04	-0.26
33	17	2076	2.20	-1.13	0.81	0.25	1.64	0.11	-9.79e-02	8.24e-03	2.12e-03	-0.10
33	17	2077	2.15	-1.17	0.80	0.18	1.63	0.28	-0.26	5.47e-03	5.89e-03	-0.27
33	17	2078	2.10	-1.14	0.77	0.19	1.60	0.12	-9.88e-02	1.53e-02	2.27e-03	-0.11
33	17	2079	2.05	-1.16	0.73	0.15	1.58	0.27	-0.27	8.02e-03	-4.49e-03	-0.27
33	17	2080	2.00	-1.16	0.70	0.14	1.56	0.12	-8.93e-02	3.06e-02	4.27e-03	-0.11
33	17	2081	1.95	-1.16	0.68	0.12	1.53	0.28	-0.27	1.04e-02	2.30e-03	-0.28
33	17	2082	1.91	-1.15	0.64	0.12	1.51	0.12	-9.81e-02	1.72e-02	2.95e-03	-0.11
33	17	2083	1.56	-1.42	3.42e-02	0.11	1.49	0.28	-0.28	6.26e-03	6.44e-04	-0.28
33	17	2084	1.52	-1.42	-1.05e-02	0.11	1.47	0.12	-0.10	1.37e-02	1.96e-03	-0.11
33	17	2085	1.51	-1.39	3.40e-02	9.27e-02	1.45	0.29	-0.28	4.49e-03	3.27e-05	-0.28
33	17	2086	1.48	-1.40	-1.96e-02	9.46e-02	1.44	0.12	-0.10	1.01e-02	9.76e-04	-0.11
33	17	2087	1.49	-1.37	3.86e-02	8.12e-02	1.43	0.28	-0.29	5.24e-04	-1.51e-03	-0.29
33	17	2088	1.45	-1.38	-2.02e-02	8.53e-02	1.41	0.11	-0.11	-2.63e-03	4.84e-05	-0.11
33	17	2089	1.46	-1.35	5.48e-02	5.78e-02	1.40	0.29	-0.28	1.70e-03	5.61e-03	-0.29
33	17	2090	1.42	-1.37	-1.13e-02	6.24e-02	1.39	0.12	-0.11	6.81e-03	8.92e-04	-0.11
33	17	2091	1.48	-1.30	0.14	4.98e-02	1.39	0.29	-0.29	3.75e-03	-5.38e-03	-0.29
33	17	2092	1.48	-1.30	0.16	3.08e-02	1.39	0.12	-0.10	1.90e-02	2.30e-03	-0.11
33	17	2093	1.51	-1.27	0.22	2.22e-02	1.39	0.29	-0.29	4.83e-03	1.15e-03	-0.29
33	17	2094	1.58	-1.21	0.34	2.98e-02	1.39	0.12	-0.11	3.92e-03	1.05e-03	-0.11
33	17	2095	1.66	-1.16	0.50	3.51e-03	1.39	0.30	-0.29	4.34e-03	1.40e-03	-0.29
33	17	2096	1.69	-1.14	0.54	1.29e-02	1.39	0.11	-0.11	-4.00e-03	-1.30e-04	-0.11
33	17	2097	1.75	-1.10	0.66	-1.56e-02	1.39	0.30	-0.29	1.04e-02	5.54e-03	-0.29
33	17	2098	1.61	-1.18	0.42	9.41e-03	1.38	0.10	-0.11	-7.52e-03	-1.20e-03	-0.11
33	17	2099	1.49	-1.27	0.22	6.54e-03	1.38	0.29	-0.29	-1.15e-03	-8.71e-04	-0.29
33	17	2100	1.31	-1.44	-0.13	-2.93e-04	1.38	0.11	-0.13	-1.53e-02	-2.03e-03	-0.12
33	17	2101	1.12	-1.68	-0.55	-7.98e-03	1.38	0.28	-0.30	-2.24e-02	-1.83e-03	-0.29
33	17	2102	1.18	-1.59	-0.33	-7.80e-02	1.38	0.11	-0.11	-2.00e-03	-5.16e-04	-0.11
33	17	2103	1.25	-1.52	-0.21	-6.63e-02	1.38	0.28	-0.29	-1.53e-03	-5.46e-03	-0.29
33	17	2104	1.21	-1.58	-0.24	-0.12	1.39	0.11	-0.11	4.04e-03	3.24e-04	-0.11
33	17	2105	1.22	-1.60	-0.29	-9.06e-02	1.40	0.29	-0.28	6.40e-04	1.87e-03	-0.28
33	17	2106	1.28	-1.56	-0.17	-0.11	1.42	0.11	-0.12	-1.06e-02	-1.03e-03	-0.11
33	17	2107	1.36	-1.50	-4.71e-02	-9.31e-02	1.43	0.28	-0.29	-4.56e-03	-2.85e-05	-0.28
33	17	2108	1.27	-1.62	-0.24	-0.11	1.45	0.10	-0.12	-1.39e-02	-1.98e-03	-0.11
33	17	2109	1.27	-1.67	-0.30	-0.10	1.47	0.28	-0.28	-5.99e-03	-5.89e-04	-0.28
33	17	2110	1.15	-1.88	-0.62	-0.11	1.49	9.87e-02	-0.12	-1.70e-02	-2.98e-03	-0.11
33	17	2111	1.15	-1.93	-0.66	-0.11	1.52	0.27	-0.28	-1.13e-02	-2.60e-03	-0.28
33	17	2112	1.16	-1.98	-0.70	-0.12	1.54	8.94e-02	-0.13	-3.23e-02	-4.74e-03	-0.11
33	17	2113	1.15	-2.04	-0.75	-0.14	1.57	0.27	-0.27	-6.28e-03	4.75e-03	-0.27
33	17	2114	1.14	-2.09	-0.76	-0.19	1.59	9.84e-02	-0.12	-1.47e-02	-2.15e-03	-0.11
33	17	2115	1.16	-2.12	-0.79	-0.18	1.61	0.26	-0.28	-7.10e-03	-6.17e-03	-0.27
33	17	2116	1.12	-2.17	-0.80	-0.25	1.62	9.95e-02	-0.11	-7.50e-03	-1.92e-03	-0.10
33	17	2117	1.14	-2.18	-0.82	-0.23	1.63	0.26	-0.27	-4.65e-03	5.17e-04	-0.26
33	17	2118	1.07	-2.17	-0.80	-0.30	1.60	8.96e-02	-0.11	-2.16e-02	-3.35e-03	-0.10
33	17	2119	1.06	-2.11	-0.79	-0.26	1.57	0.25	-0.27	-9.38e-03	-8.08e-04	-0.26

33	17	2120	0.91	-1.97	-0.75	-0.32	1.43	8.30e-02	-0.12	-2.85e-02	-4.15e-03	-9.85e-02
33	17	2121	0.83	-1.79	-0.71	-0.26	1.29	0.24	-0.26	-1.94e-02	-1.33e-03	-0.25
33	17	2122	0.50	-1.45	-0.65	-0.31	0.96	5.01e-02	-0.15	-8.87e-02	-1.12e-02	-9.22e-02
33	17	2123	0.14	-1.23	-0.52	-0.58	0.68	0.16	-0.32	-0.15	-9.26e-03	-0.23
33	17	2124	-6.79e-02	-1.75	-0.56	-1.25	0.77	-0.27	-1.38	-1.38	-0.27	-3.04e-02
33	17	2125	2.03	-0.10	0.59	1.33	1.00	0.88	0.14	0.88	0.14	-1.66e-02
33	17	2126	1.58	-0.53	0.44	0.61	1.05	0.27	-0.17	9.66e-02	2.76e-03	-0.21
33	17	2127	1.95	-1.03	0.51	0.42	1.49	0.13	-5.75e-02	6.44e-02	7.41e-03	-8.90e-02
33	17	2128	2.25	-1.51	0.47	0.27	1.88	0.26	-0.24	1.52e-02	-2.03e-04	-0.25
33	17	2129	2.48	-1.60	0.50	0.38	2.04	0.11	-8.72e-02	2.21e-02	3.31e-03	-9.94e-02
33	17	2130	2.60	-1.81	0.49	0.29	2.20	0.26	-0.25	8.33e-03	5.15e-05	-0.26
33	17	2131	2.69	-1.82	0.50	0.37	2.26	0.11	-9.34e-02	1.68e-02	2.49e-03	-0.10
33	17	2132	2.69	-1.92	0.49	0.28	2.31	0.27	-0.26	6.15e-03	-4.70e-04	-0.26
33	17	2133	2.70	-1.90	0.48	0.32	2.30	0.11	-9.97e-02	8.56e-03	4.44e-04	-0.10
33	17	2134	2.64	-1.95	0.46	0.23	2.29	0.27	-0.27	4.42e-03	-2.89e-03	-0.27
33	17	2135	2.62	-1.92	0.44	0.27	2.27	0.11	-9.77e-02	1.32e-02	1.37e-03	-0.10
33	17	2136	2.55	-1.95	0.41	0.20	2.25	0.28	-0.27	8.38e-03	1.40e-03	-0.27
33	17	2137	2.53	-1.92	0.38	0.23	2.22	0.12	-9.43e-02	2.30e-02	3.33e-03	-0.11
33	17	2138	2.46	-1.94	0.35	0.17	2.20	0.28	-0.27	8.29e-03	-1.99e-04	-0.28
33	17	2139	2.44	-1.91	0.33	0.20	2.17	0.12	-0.10	1.44e-02	1.58e-03	-0.11
33	17	2140	2.38	-1.92	0.31	0.15	2.15	0.28	-0.28	5.77e-03	-7.79e-04	-0.28
33	17	2141	2.37	-1.89	0.29	0.18	2.13	0.12	-0.11	1.13e-02	8.45e-04	-0.11
33	17	2142	2.32	-1.90	0.28	0.14	2.11	0.28	-0.28	4.49e-03	-1.05e-03	-0.28
33	17	2143	2.31	-1.88	0.27	0.17	2.09	0.12	-0.11	7.97e-03	1.60e-04	-0.11
33	17	2144	2.27	-1.88	0.26	0.12	2.08	0.28	-0.28	2.11e-03	-1.41e-03	-0.28
33	17	2145	2.26	-1.86	0.26	0.14	2.06	0.11	-0.11	-2.83e-04	-1.34e-03	-0.11
33	17	2146	2.23	-1.86	0.27	9.46e-02	2.04	0.29	-0.29	8.28e-04	-3.13e-03	-0.29
33	17	2147	2.23	-1.84	0.28	0.11	2.03	0.11	-0.11	5.78e-03	3.62e-04	-0.11
33	17	2148	2.21	-1.84	0.32	4.72e-02	2.02	0.29	-0.29	4.23e-03	1.80e-03	-0.29
33	17	2149	2.23	-1.82	0.37	4.72e-02	2.02	0.12	-0.11	1.28e-02	2.36e-03	-0.11
33	17	2150	2.26	-1.81	0.45	-1.84e-03	2.02	0.29	-0.29	5.15e-03	1.51e-03	-0.29
33	17	2151	2.27	-1.79	0.48	7.25e-03	2.02	0.11	-0.11	1.41e-03	7.68e-04	-0.11
33	17	2152	2.31	-1.74	0.57	6.43e-04	2.01	0.30	-0.28	8.39e-03	3.89e-03	-0.29
33	17	2153	2.23	-1.80	0.43	3.47e-03	2.00	0.11	-0.11	-2.51e-03	-1.54e-05	-0.11
33	17	2154	2.16	-1.82	0.32	1.59e-02	1.99	0.29	-0.29	2.28e-03	2.00e-04	-0.29
33	17	2155	2.01	-1.96	2.66e-02	2.28e-02	1.99	0.12	-0.12	-6.41e-04	-5.64e-04	-0.12
33	17	2156	1.83	-2.16	-0.37	3.33e-02	1.98	0.28	-0.30	-1.19e-02	-6.32e-03	-0.29
33	17	2157	1.81	-2.20	-0.40	3.34e-03	1.99	0.11	-0.13	-1.10e-02	-2.35e-03	-0.12
33	17	2158	1.75	-2.27	-0.46	-5.80e-02	2.00	0.28	-0.29	-7.44e-03	-3.33e-04	-0.29
33	17	2159	1.71	-2.32	-0.48	-0.13	2.01	0.11	-0.11	-4.78e-03	-1.70e-04	-0.11
33	17	2160	1.74	-2.32	-0.48	-0.10	2.02	0.29	-0.29	-3.22e-03	1.65e-03	-0.29
33	17	2161	1.76	-2.32	-0.39	-0.17	2.03	0.11	-0.11	2.04e-03	1.63e-03	-0.11
33	17	2162	1.82	-2.29	-0.34	-0.13	2.05	0.28	-0.28	-7.07e-04	1.84e-03	-0.28
33	17	2163	1.83	-2.31	-0.31	-0.17	2.07	0.11	-0.12	-8.62e-03	-4.60e-04	-0.11
33	17	2164	1.87	-2.31	-0.30	-0.14	2.09	0.28	-0.28	-4.66e-03	7.52e-04	-0.28
33	17	2165	1.87	-2.35	-0.30	-0.18	2.11	0.11	-0.12	-1.14e-02	-1.12e-03	-0.11
33	17	2166	1.91	-2.36	-0.31	-0.15	2.13	0.28	-0.28	-5.53e-03	5.95e-04	-0.28
33	17	2167	1.91	-2.42	-0.32	-0.19	2.16	0.10	-0.12	-1.42e-02	-1.87e-03	-0.11
33	17	2168	1.94	-2.44	-0.34	-0.16	2.19	0.27	-0.28	-9.60e-03	-7.48e-04	-0.28
33	17	2169	1.94	-2.50	-0.36	-0.20	2.22	9.32e-02	-0.12	-2.54e-02	-4.26e-03	-0.11
33	17	2170	1.96	-2.53	-0.38	-0.20	2.24	0.27	-0.27	-4.64e-03	1.28e-04	-0.27
33	17	2171	1.91	-2.61	-0.43	-0.27	2.26	9.80e-02	-0.11	-1.25e-02	-1.28e-03	-0.10
33	17	2172	1.93	-2.63	-0.47	-0.23	2.28	0.27	-0.27	-8.09e-03	9.97e-04	-0.27
33	17	2173	1.89	-2.69	-0.49	-0.31	2.29	0.10	-0.11	-7.35e-03	-4.85e-04	-0.10
33	17	2174	1.92	-2.67	-0.48	-0.27	2.29	0.26	-0.27	-5.16e-03	6.14e-04	-0.26
33	17	2175	1.82	-2.67	-0.49	-0.35	2.24	9.33e-02	-0.11	-1.75e-02	-2.99e-03	-0.10
33	17	2176	1.81	-2.58	-0.49	-0.29	2.19	0.25	-0.26	-8.45e-03	-4.20e-04	-0.26
33	17	2177	1.61	-2.46	-0.48	-0.37	2.04	8.75e-02	-0.11	-2.19e-02	-3.61e-03	-9.98e-02
33	17	2178	1.52	-2.24	-0.46	-0.26	1.88	0.24	-0.26	-1.62e-02	-4.99e-04	-0.25
33	17	2179	1.05	-1.93	-0.48	-0.40	1.49	5.72e-02	-0.13	-6.58e-02	-7.83e-03	-8.95e-02
33	17	2180	0.56	-1.56	-0.40	-0.60	1.06	0.17	-0.27	-9.30e-02	-1.26e-03	-0.21
33	17	2181	0.14	-2.01	-0.56	-1.31	1.00	-0.14	-0.87	-0.87	-0.14	-1.69e-02
33	17	2182	1.91	-0.71	0.20	1.00	1.25	0.39	0.12	0.39	0.12	-1.33e-02
33	17	2183	1.72	-1.03	0.24	0.44	1.37	0.24	-0.17	5.29e-02	1.91e-02	-0.20
33	17	2184	2.22	-1.48	0.32	0.41	1.85	0.11	-5.48e-02	3.62e-02	1.48e-02	-7.96e-02
33	17	2185	2.49	-2.00	0.36	0.14	2.24	0.25	-0.24	8.67e-03	4.46e-03	-0.25
33	17	2186	2.81	-2.02	0.43	0.36	2.41	0.11	-8.39e-02	1.72e-02	5.70e-03	-9.52e-02
33	17	2187	2.94	-2.21	0.48	0.25	2.57	0.26	-0.25	7.46e-03	2.06e-03	-0.26
33	17	2188	3.11	-2.17	0.57	0.36	2.64	0.11	-9.07e-02	1.41e-02	3.87e-03	-9.96e-02
33	17	2189	3.14	-2.27	0.62	0.25	2.70	0.26	-0.26	7.08e-03	1.68e-03	-0.26
33	17	2190	3.23	-2.19	0.70	0.34	2.71	0.11	-9.49e-02	1.05e-02	3.05e-03	-0.10
33	17	2191	3.19	-2.25	0.72	0.22	2.71	0.27	-0.26	6.51e-03	1.59e-03	-0.27
33	17	2192	3.24	-2.16	0.78	0.30	2.69	0.11	-9.46e-02	1.21e-02	3.06e-03	-0.10
33	17	2193	3.17	-2.21	0.77	0.19	2.68	0.27	-0.26	7.95e-03	1.06e-03	-0.27
33	17	2194	3.21	-2.13	0.80	0.28	2.66	0.11	-9.48e-02	1.62e-02	3.17e-03	-0.10
33	17	2195	3.12	-2.18	0.78	0.16	2.63	0.28	-0.27	7.70e-03	8.92e-04	-0.27
33	17	2196	3.15	-2.10	0.79	0.25	2.61	0.11	-9.95e-02	1.22e-02	2.57e-03	-0.11
33	17	2197	3.06	-2.15	0.76	0.15	2.59	0.28	-0.27	6.41e-03	1.15e-03	-0.28
33	17	2198	3.08	-2.09	0.77	0.23	2.57	0.11	-0.10	9.80e-03	2.51e-03	-0.11

33	17	2199	3.00	-2.13	0.73	0.14	2.55	0.28	-0.27	5.39e-03	1.41e-03	-0.28
33	17	2200	3.01	-2.09	0.72	0.21	2.53	0.11	-0.10	7.30e-03	2.37e-03	-0.11
33	17	2201	2.93	-2.14	0.67	0.12	2.52	0.28	-0.28	3.94e-03	1.53e-03	-0.28
33	17	2202	2.92	-2.10	0.65	0.17	2.50	0.11	-0.11	3.24e-03	1.66e-03	-0.11
33	17	2203	2.84	-2.15	0.60	9.81e-02	2.48	0.29	-0.28	2.83e-03	1.22e-03	-0.28
33	17	2204	2.83	-2.13	0.57	0.13	2.47	0.11	-0.11	5.16e-03	1.46e-03	-0.11
33	17	2205	2.77	-2.17	0.52	6.93e-02	2.46	0.29	-0.28	3.46e-03	3.37e-04	-0.29
33	17	2206	2.77	-2.15	0.53	8.91e-02	2.45	0.11	-0.11	6.66e-03	1.03e-03	-0.11
33	17	2207	2.72	-2.19	0.53	-2.39e-03	2.44	0.29	-0.28	5.38e-03	9.39e-04	-0.28
33	17	2208	2.69	-2.20	0.47	1.63e-02	2.43	0.11	-0.11	1.45e-03	1.78e-04	-0.11
33	17	2209	2.64	-2.21	0.41	2.63e-02	2.41	0.29	-0.28	4.01e-03	9.94e-04	-0.29
33	17	2210	2.49	-2.32	0.16	8.90e-03	2.41	0.12	-0.11	9.17e-04	8.81e-05	-0.12
33	17	2211	2.42	-2.38	-1.29e-02	4.94e-02	2.40	0.28	-0.29	-3.79e-03	-2.26e-03	-0.28
33	17	2212	2.34	-2.47	-0.12	-4.60e-03	2.40	0.12	-0.12	4.83e-04	-1.83e-04	-0.12
33	17	2213	2.21	-2.63	-0.41	1.89e-03	2.41	0.28	-0.29	-7.15e-03	-2.35e-03	-0.28
33	17	2214	2.18	-2.68	-0.47	-3.28e-02	2.43	0.11	-0.12	-8.18e-03	-1.31e-03	-0.11
33	17	2215	2.15	-2.73	-0.49	-9.48e-02	2.43	0.29	-0.28	-1.09e-03	2.70e-03	-0.28
33	17	2216	2.08	-2.84	-0.61	-0.15	2.45	0.11	-0.11	-5.50e-03	-1.14e-03	-0.11
33	17	2217	2.08	-2.88	-0.70	-0.10	2.46	0.28	-0.29	-5.00e-03	-1.96e-03	-0.28
33	17	2218	2.05	-2.95	-0.72	-0.18	2.48	0.11	-0.11	-1.96e-03	-1.59e-03	-0.11
33	17	2219	2.10	-2.95	-0.71	-0.13	2.51	0.28	-0.28	-3.21e-03	-1.55e-03	-0.28
33	17	2220	2.07	-3.01	-0.75	-0.20	2.53	0.10	-0.11	-7.72e-03	-2.63e-03	-0.11
33	17	2221	2.12	-3.00	-0.74	-0.14	2.54	0.28	-0.28	-5.47e-03	-1.57e-03	-0.28
33	17	2222	2.08	-3.08	-0.77	-0.22	2.57	0.10	-0.11	-9.91e-03	-2.67e-03	-0.11
33	17	2223	2.15	-3.06	-0.76	-0.15	2.59	0.27	-0.28	-6.28e-03	-1.25e-03	-0.28
33	17	2224	2.12	-3.14	-0.79	-0.24	2.61	9.94e-02	-0.11	-1.20e-02	-2.65e-03	-0.11
33	17	2225	2.20	-3.12	-0.77	-0.15	2.64	0.27	-0.28	-8.40e-03	-1.16e-03	-0.27
33	17	2226	2.16	-3.19	-0.77	-0.26	2.66	9.27e-02	-0.11	-1.80e-02	-3.61e-03	-0.10
33	17	2227	2.24	-3.15	-0.71	-0.20	2.68	0.27	-0.27	-5.43e-03	-4.85e-04	-0.27
33	17	2228	2.17	-3.24	-0.77	-0.30	2.69	9.59e-02	-0.11	-1.16e-02	-3.00e-03	-0.10
33	17	2229	2.24	-3.20	-0.76	-0.20	2.71	0.26	-0.27	-8.97e-03	-2.32e-03	-0.27
33	17	2230	2.19	-3.24	-0.72	-0.33	2.71	9.44e-02	-0.11	-9.61e-03	-3.02e-03	-0.10
33	17	2231	2.27	-3.14	-0.62	-0.25	2.70	0.26	-0.27	-6.51e-03	-1.71e-03	-0.26
33	17	2232	2.18	-3.11	-0.57	-0.35	2.64	9.02e-02	-0.11	-1.45e-02	-4.08e-03	-9.94e-02
33	17	2233	2.22	-2.94	-0.47	-0.24	2.58	0.25	-0.26	-7.49e-03	-2.19e-03	-0.26
33	17	2234	2.04	-2.81	-0.42	-0.35	2.42	8.38e-02	-0.11	-1.70e-02	-5.76e-03	-9.50e-02
33	17	2235	2.02	-2.50	-0.34	-0.13	2.26	0.24	-0.25	-9.17e-03	-4.68e-03	-0.25
33	17	2236	1.53	-2.20	-0.29	-0.38	1.86	5.31e-02	-0.11	-3.75e-02	-1.52e-02	-7.86e-02
33	17	2237	1.07	-1.71	-0.20	-0.45	1.39	0.17	-0.24	-5.04e-02	-1.84e-02	-0.20
33	17	2238	0.75	-1.91	-0.16	-0.99	1.26	-0.12	-0.39	-0.39	-0.12	-1.41e-02
33	17	2239	0.52	-2.20	-0.78	-0.89	1.36	0.12	-8.25e-02	-7.39e-02	0.11	-4.03e-02
33	17	2240	1.04	-1.93	-0.52	-0.37	1.48	0.26	-0.18	1.27e-02	6.30e-02	-0.22
33	17	2241	1.61	-2.26	-0.28	-0.37	1.94	0.11	-7.14e-02	6.50e-03	2.95e-02	-8.87e-02
33	17	2242	2.28	-2.36	0.10	-0.18	2.32	0.24	-0.25	4.29e-03	-2.12e-02	-0.24
33	17	2243	2.91	-2.06	0.51	0.35	2.48	0.15	-7.22e-02	9.92e-02	-1.98e-02	-9.47e-02
33	17	2244	3.12	-2.17	0.71	0.25	2.64	0.24	-0.26	-3.27e-03	-2.06e-02	-0.25
33	17	2245	3.39	-2.06	0.94	0.38	2.71	9.34e-02	-0.10	2.10e-03	-1.04e-02	-9.73e-02
33	17	2246	3.48	-2.13	1.08	0.27	2.77	0.25	-0.26	-2.51e-03	-1.16e-02	-0.25
33	17	2247	3.63	-2.01	1.23	0.39	2.79	9.57e-02	-0.10	2.64e-03	-9.81e-03	-9.91e-02
33	17	2248	3.62	-2.07	1.30	0.25	2.80	0.25	-0.27	-1.88e-03	-1.13e-02	-0.26
33	17	2249	3.71	-1.95	1.38	0.37	2.79	9.84e-02	-0.10	4.86e-03	-8.94e-03	-0.10
33	17	2250	3.64	-2.03	1.38	0.23	2.77	0.26	-0.27	-9.15e-04	-9.23e-03	-0.26
33	17	2251	3.69	-1.93	1.41	0.35	2.76	0.10	-0.10	5.88e-03	-6.91e-03	-0.10
33	17	2252	3.59	-2.00	1.39	0.20	2.74	0.26	-0.27	-3.98e-04	-7.62e-03	-0.26
33	17	2253	3.64	-1.90	1.41	0.33	2.72	0.10	-0.11	4.27e-03	-6.10e-03	-0.10
33	17	2254	3.54	-1.98	1.37	0.19	2.69	0.26	-0.27	-1.87e-04	-6.80e-03	-0.27
33	17	2255	3.56	-1.90	1.36	0.30	2.68	0.11	-0.11	4.19e-03	-5.50e-03	-0.11
33	17	2256	3.45	-1.98	1.29	0.18	2.66	0.27	-0.27	-4.33e-05	-6.07e-03	-0.27
33	17	2257	3.45	-1.93	1.25	0.27	2.65	0.11	-0.11	3.87e-03	-4.89e-03	-0.11
33	17	2258	3.35	-2.01	1.17	0.16	2.63	0.27	-0.28	-1.44e-04	-5.26e-03	-0.27
33	17	2259	3.32	-1.99	1.10	0.23	2.62	0.11	-0.11	1.37e-03	-4.29e-03	-0.11
33	17	2260	3.19	-2.08	0.98	0.13	2.60	0.27	-0.28	-1.34e-04	-4.17e-03	-0.28
33	17	2261	3.14	-2.09	0.88	0.17	2.59	0.11	-0.11	2.24e-03	-2.82e-03	-0.11
33	17	2262	3.01	-2.18	0.74	8.50e-02	2.58	0.28	-0.28	3.20e-04	-2.31e-03	-0.28
33	17	2263	2.94	-2.21	0.62	0.10	2.56	0.11	-0.11	2.97e-03	-1.15e-03	-0.11
33	17	2264	2.79	-2.33	0.48	-1.86e-02	2.55	0.28	-0.28	7.41e-04	-1.05e-03	-0.28
33	17	2265	2.74	-2.35	0.36	3.17e-02	2.54	0.11	-0.11	3.92e-04	-4.87e-04	-0.11
33	17	2266	2.63	-2.40	0.21	2.09e-02	2.52	0.28	-0.28	-3.09e-04	1.17e-04	-0.28
33	17	2267	2.53	-2.49	4.14e-02	-9.20e-04	2.51	0.11	-0.11	-4.12e-05	1.85e-04	-0.11
33	17	2268	2.50	-2.51	-0.10	8.85e-02	2.50	0.28	-0.28	-1.04e-04	4.66e-04	-0.28
33	17	2269	2.38	-2.65	-0.26	-1.15e-02	2.51	0.11	-0.11	-5.99e-04	6.80e-04	-0.11
33	17	2270	2.32	-2.74	-0.39	-3.32e-02	2.53	0.28	-0.28	-3.40e-04	9.24e-04	-0.28
33	17	2271	2.25	-2.86	-0.52	-8.51e-02	2.55	0.11	-0.11	-3.02e-03	1.05e-03	-0.11
33	17	2272	2.18	-2.96	-0.67	-0.11	2.55	0.28	-0.28	-3.51e-04	2.23e-03	-0.28
33	17	2273	2.08	-3.10	-0.84	-0.18	2.57	0.11	-0.11	-2.24e-03	2.76e-03	-0.11
33	17	2274	2.08	-3.15	-0.95	-0.12	2.58	0.28	-0.27	1.42e-04	4.03e-03	-0.28
33	17	2275	1.98	-3.30	-1.09	-0.22	2.60	0.11	-0.10	-1.41e-03	4.35e-03	-0.11
33	17	2276	2.01	-3.34	-1.16	-0.17	2.63	0.28	-0.27	1.24e-04	5.34e-03	-0.27
33	17	2277	1.94	-3.44	-1.23	-0.26	2.64	0.11	-0.11	-3.83e-03	4.92e-03	-0.11

33	17	2278	1.99	-3.44	-1.27	-0.18	2.66	0.27	-0.27	3.88e-05	6.05e-03	-0.27
33	17	2279	1.92	-3.55	-1.34	-0.29	2.68	0.11	-0.10	-4.14e-03	5.51e-03	-0.11
33	17	2280	1.99	-3.53	-1.35	-0.19	2.70	0.27	-0.27	1.94e-04	6.78e-03	-0.27
33	17	2281	1.92	-3.63	-1.39	-0.32	2.73	0.10	-0.10	-4.21e-03	6.07e-03	-0.10
33	17	2282	2.03	-3.59	-1.36	-0.19	2.75	0.27	-0.26	4.15e-04	7.39e-03	-0.27
33	17	2283	1.96	-3.67	-1.38	-0.34	2.77	0.10	-0.10	-5.59e-03	6.83e-03	-0.10
33	17	2284	2.03	-3.65	-1.37	-0.25	2.78	0.27	-0.26	1.01e-03	9.77e-03	-0.26
33	17	2285	1.96	-3.72	-1.38	-0.38	2.80	0.10	-9.89e-02	-4.87e-03	9.00e-03	-0.10
33	17	2286	2.09	-3.61	-1.30	-0.23	2.80	0.27	-0.25	1.90e-03	1.06e-02	-0.26
33	17	2287	2.01	-3.65	-1.25	-0.39	2.80	0.10	-9.47e-02	-2.63e-03	9.74e-03	-9.81e-02
33	17	2288	2.14	-3.49	-1.09	-0.27	2.78	0.26	-0.25	2.49e-03	1.16e-02	-0.26
33	17	2289	2.08	-3.40	-0.94	-0.38	2.72	0.10	-9.27e-02	-1.96e-03	1.02e-02	-9.66e-02
33	17	2290	2.19	-3.13	-0.71	-0.24	2.65	0.26	-0.24	3.26e-03	2.07e-02	-0.25
33	17	2291	2.08	-2.92	-0.50	-0.34	2.50	7.15e-02	-0.15	-9.95e-02	1.99e-02	-9.39e-02
33	17	2292	2.37	-2.32	-0.12	0.16	2.34	0.25	-0.24	-4.26e-03	2.10e-02	-0.25
33	17	2293	2.25	-1.66	0.25	0.34	1.96	7.03e-02	-0.11	-6.84e-03	-2.92e-02	-8.76e-02
33	17	2294	1.95	-1.05	0.52	0.38	1.50	0.18	-0.26	-1.25e-02	-6.40e-02	-0.22
33	17	2295	2.22	-0.53	0.79	0.90	1.38	8.42e-02	-0.11	7.55e-02	-0.11	-4.07e-02

M_G			**N max**	**N min**	**N 1**	**N 2**	**N 1-2**	**M max**	**M min**	**M 1**	**M 2**	**M 1-2**
				-3.72	-2.08	-1.31	0.22		-2.54	-2.54	-0.30	-0.30
			3.71		2.07	1.33	2.80	2.55		2.54	0.30	0.02

Macro	Tipo	Angolo 1-X (gradi)
34	**Guscio**	**0.0**

M_G	**CDC**	**Nodo**	**N max**	**N min**	**N 1**	**N 2**	**N 1-2**	**M max**	**M min**	**M 1**	**M 2**	**M 1-2**
			kN/ m	kN/ m	kN/ m	kN/ m	kN/ m	kN	kN	kN	kN	kN
34	17	2718	1.47	0.48	0.98	0.96	0.49	2.55	0.30	2.55	0.30	-4.50e-02
34	17	2719	1.29	7.30e-02	1.26	9.75e-02	0.17	0.49	-0.14	0.32	2.80e-02	-0.28
34	17	2720	1.77	0.23	1.68	0.32	0.35	0.17	-6.81e-02	9.57e-02	6.69e-03	-0.11
34	17	2721	2.30	-5.11e-02	2.10	0.16	0.67	0.25	-0.23	2.01e-02	2.54e-03	-0.24
34	17	2722	2.69	8.97e-02	2.50	0.27	0.66	0.12	-8.54e-02	3.20e-02	3.19e-03	-0.10
34	17	2723	3.13	-0.20	2.97	-3.81e-02	0.72	0.25	-0.24	1.03e-02	1.14e-03	-0.25
34	17	2724	3.47	7.28e-02	3.33	0.21	0.68	0.12	-8.89e-02	2.87e-02	3.22e-03	-0.10
34	17	2725	3.79	-0.18	3.67	-5.68e-02	0.68	0.25	-0.25	2.85e-03	6.17e-04	-0.25
34	17	2726	3.88	0.11	3.78	0.21	0.61	0.13	-9.84e-02	2.97e-02	1.26e-03	-0.11
34	17	2727	0.51	-0.64	-0.11	-2.88e-02	0.57	0.26	-0.30	-5.79e-02	1.56e-02	-0.28
34	17	2728	0.35	-4.17	-4.11	0.28	0.56	4.05e-02	-2.10e-02	1.80e-02	1.40e-03	-2.96e-02
34	17	2729	7.21e-02	-4.40	-4.33	5.06e-04	0.56	0.31	-0.26	7.12e-02	-1.44e-02	-0.28
34	17	2730	9.70e-03	-4.10	-4.03	-6.73e-02	0.56	0.13	-0.10	2.50e-02	5.94e-03	-0.12
34	17	2731	5.22e-02	-3.88	-3.80	-2.83e-02	0.56	0.27	-0.25	1.41e-02	1.72e-03	-0.26
34	17	2732	3.53e-02	-3.84	-3.76	-4.25e-02	0.54	0.12	-9.91e-02	2.05e-02	3.03e-03	-0.11
34	17	2733	5.45e-02	-3.71	-3.64	-2.37e-02	0.54	0.27	-0.26	5.21e-03	7.23e-04	-0.26
34	17	2734	2.73e-02	-3.60	-3.53	-5.05e-02	0.53	0.12	-0.10	1.85e-02	2.12e-03	-0.11
34	17	2735	5.97e-02	-3.42	-3.34	-1.95e-02	0.52	0.27	-0.26	5.87e-03	2.12e-04	-0.27
34	17	2736	-0.16	-3.28	-3.19	-0.25	0.51	0.12	-0.10	1.59e-02	1.22e-03	-0.11
34	17	2737	6.49e-02	-3.07	-2.99	-1.91e-02	0.51	0.27	-0.27	-2.05e-03	-4.67e-04	-0.27
34	17	2738	3.89e-03	-2.73	-2.65	-8.17e-02	0.48	0.13	-0.11	1.64e-02	-9.51e-04	-0.12
34	17	2739	9.82e-02	-2.22	-2.13	1.02e-02	0.44	0.27	-0.33	-6.74e-02	1.60e-02	-0.30
34	17	2740	-9.06e-02	-2.25	-2.15	-0.19	0.44	3.58e-02	-2.68e-02	8.37e-03	5.86e-04	-3.10e-02
34	17	2741	0.11	-2.19	-2.11	2.04e-02	0.44	0.33	-0.27	7.29e-02	-1.59e-02	-0.30
34	17	2742	2.55e-02	-1.70	-1.58	-9.65e-02	0.44	0.13	-0.12	6.58e-03	3.85e-03	-0.12
34	17	2743	0.15	-1.29	-1.13	-2.68e-03	0.45	0.28	-0.27	8.54e-03	1.71e-03	-0.27
34	17	2744	0.28	-0.63	-0.29	-5.91e-02	0.44	0.12	-0.11	3.13e-03	8.38e-04	-0.11
34	17	2745	0.45	-0.42	1.66e-02	1.07e-02	0.43	0.28	-0.27	3.62e-03	5.13e-03	-0.27
34	17	2746	0.30	-0.57	-0.25	-1.81e-02	0.42	0.12	-0.12	1.17e-03	-2.25e-03	-0.12
34	17	2747	0.27	-0.66	-0.21	-0.18	0.47	0.25	-0.29	-1.27e-02	-3.43e-02	-0.27
34	17	2748	0.80	-0.28	0.40	0.12	0.52	0.15	-0.14	1.29e-02	3.82e-03	-0.14
34	17	2749	1.66	0.51	1.64	0.53	0.15	0.32	-0.29	-2.00e-02	5.46e-02	-0.30
34	17	2750	1.56	0.24	1.56	0.24	-4.10e-02	-3.67e-03	-8.57e-03	-8.39e-03	-3.86e-03	-9.30e-04
34	17	2751	1.83	-0.35	1.79	-0.31	0.30	0.30	-0.37	-6.11e-02	-1.37e-02	-0.34
34	17	2752	2.71	0.10	2.63	0.18	0.45	3.18e-02	-5.92e-02	-2.24e-02	-5.02e-03	-4.46e-02
34	17	2753	2.77	-7.70e-02	2.70	-4.00e-03	0.45	0.33	-0.27	7.62e-02	-1.06e-02	-0.30
34	17	2754	3.27	1.11e-02	3.19	9.12e-02	0.50	0.11	-0.13	-1.66e-02	1.11e-03	-0.12
34	17	2755	3.51	-4.41e-02	3.42	4.02e-02	0.54	0.27	-0.27	7.97e-04	7.43e-04	-0.27
34	17	2756	3.64	0.19	3.55	0.28	0.54	0.10	-0.12	-1.56e-02	-1.26e-03	-0.11
34	17	2757	3.72	-4.53e-02	3.63	3.84e-02	0.55	0.26	-0.27	-5.79e-03	-3.89e-04	-0.27
34	17	2758	3.84	-2.23e-02	3.76	6.03e-02	0.56	9.85e-02	-0.12	-1.87e-02	-2.83e-03	-0.11
34	17	2759	3.90	-4.46e-02	3.81	3.98e-02	0.57	0.26	-0.27	-5.19e-03	-7.52e-04	-0.26
34	17	2760	3.99	-2.91e-02	3.90	5.45e-02	0.57	9.61e-02	-0.12	-2.08e-02	-4.40e-03	-0.11
34	17	2761	4.01	-4.80e-02	3.92	3.90e-02	0.59	0.25	-0.27	-1.43e-02	-2.22e-03	-0.26
34	17	2762	4.20	-5.82e-03	4.12	7.75e-02	0.59	9.74e-02	-0.13	-2.65e-02	-7.77e-03	-0.11
34	17	2763	4.50	-6.53e-02	4.42	1.04e-02	0.58	0.25	-0.32	-7.21e-02	1.06e-02	-0.28
34	17	2764	4.24	-0.36	4.17	-0.29	0.57	2.00e-02	-3.89e-02	-1.77e-02	-1.23e-03	-2.82e-02
34	17	2765	0.69	-0.49	0.16	3.43e-02	0.59	0.30	-0.26	5.88e-02	-1.20e-02	-0.28

34	17	2766	0.66	-0.68	0.21	-0.23	0.63	9.65e-02	-0.13	-2.95e-02	-2.32e-03	-0.11
34	17	2767	0.92	-0.52	0.34	6.35e-02	0.71	0.25	-0.25	-2.90e-03	-1.83e-04	-0.25
34	17	2768	-6.96e-02	-3.48	-3.33	-0.22	0.70	8.59e-02	-0.12	-2.91e-02	-4.64e-03	-0.10
34	17	2769	0.22	-3.14	-2.96	3.75e-02	0.75	0.24	-0.25	-1.05e-02	-1.24e-03	-0.25
34	17	2770	-7.11e-02	-2.67	-2.47	-0.28	0.70	8.22e-02	-0.12	-3.25e-02	-4.68e-03	-9.98e-02
34	17	2771	4.62e-02	-2.31	-2.08	-0.18	0.70	0.23	-0.26	-2.01e-02	-3.70e-03	-0.24
34	17	2772	-0.23	-1.75	-1.66	-0.32	0.37	6.77e-02	-0.17	-9.56e-02	-5.43e-03	-0.11
34	17	2773	-9.49e-02	-1.26	-1.23	-0.12	0.17	0.14	-0.49	-0.32	-3.21e-02	-0.28
34	17	2774	-0.45	-1.45	-0.93	-0.97	0.50	-0.30	-2.56	-2.56	-0.31	-4.43e-02
34	17	2775	1.48	7.02e-02	0.54	1.02	0.66	1.91	0.29	1.91	0.29	1.40e-02
34	17	2776	0.94	-3.91e-03	0.68	0.25	0.42	0.36	-0.15	0.21	5.31e-03	-0.23
34	17	2777	1.46	-0.14	1.06	0.26	0.69	0.18	-4.29e-02	0.12	1.62e-02	-9.87e-02
34	17	2778	1.98	-0.44	1.37	0.17	1.05	0.26	-0.24	2.04e-02	2.20e-03	-0.25
34	17	2779	2.23	-0.34	1.63	0.26	1.09	0.12	-8.24e-02	2.94e-02	4.27e-03	-9.84e-02
34	17	2780	2.46	-0.42	1.88	0.16	1.16	0.26	-0.25	9.80e-03	1.08e-03	-0.26
34	17	2781	2.61	-0.29	2.09	0.23	1.11	0.12	-8.66e-02	2.51e-02	3.99e-03	-0.10
34	17	2782	2.73	-0.31	2.26	0.16	1.10	0.26	-0.26	3.75e-03	-1.49e-04	-0.26
34	17	2783	2.73	-0.18	2.33	0.23	1.01	0.10	-0.11	-1.02e-03	-9.90e-04	-0.10
34	17	2784	2.70	-0.19	2.35	0.15	0.94	0.30	-0.25	2.27e-02	2.49e-02	-0.27
34	17	2785	2.84	-9.28e-02	2.52	0.22	0.91	8.28e-02	-6.46e-02	1.60e-02	2.16e-03	-7.34e-02
34	17	2786	2.94	-9.23e-02	2.65	0.20	0.90	0.26	-0.29	-9.42e-03	-2.33e-02	-0.28
34	17	2787	2.89	-0.12	2.58	0.19	0.91	0.14	-7.93e-02	4.92e-02	9.55e-03	-0.11
34	17	2788	2.76	-0.16	2.43	0.16	0.92	0.28	-0.26	1.24e-02	2.65e-03	-0.27
34	17	2789	2.70	-0.16	2.38	0.16	0.90	0.12	-9.62e-02	1.86e-02	3.55e-03	-0.11
34	17	2790	2.60	-0.17	2.27	0.16	0.90	0.28	-0.27	5.42e-03	8.03e-04	-0.27
34	17	2791	2.53	-0.18	2.20	0.15	0.88	0.12	-9.89e-02	1.62e-02	2.41e-03	-0.11
34	17	2792	0.91	-0.84	1.97e-03	7.41e-02	0.88	0.28	-0.27	5.46e-03	1.63e-04	-0.28
34	17	2793	0.82	-0.92	-0.13	2.61e-02	0.86	0.12	-0.10	1.33e-02	1.30e-03	-0.11
34	17	2794	0.90	-0.82	1.82e-02	6.44e-02	0.86	0.28	-0.28	-8.90e-04	-1.43e-03	-0.28
34	17	2795	0.74	-0.92	-0.20	2.79e-02	0.82	0.10	-0.12	-1.49e-02	-4.00e-03	-0.11
34	17	2796	0.85	-0.73	4.13e-02	8.24e-02	0.79	0.32	-0.27	1.95e-02	2.58e-02	-0.29
34	17	2797	0.31	-1.73	-1.36	-5.91e-02	0.78	8.20e-02	-7.39e-02	7.33e-03	8.03e-04	-7.79e-02
34	17	2798	0.40	-1.68	-1.33	4.87e-02	0.78	0.28	-0.31	-1.39e-02	-2.55e-02	-0.29
34	17	2799	0.38	-1.53	-1.10	-4.56e-02	0.80	0.13	-9.31e-02	3.46e-02	7.07e-03	-0.11
34	17	2800	0.65	-1.03	-0.41	2.95e-02	0.81	0.29	-0.28	8.30e-03	3.70e-03	-0.29
34	17	2801	0.51	-1.22	-0.68	-3.16e-02	0.80	0.11	-0.11	4.39e-03	6.63e-04	-0.11
34	17	2802	0.54	-1.17	-0.59	-3.68e-02	0.81	0.28	-0.29	-3.78e-03	-7.04e-03	-0.28
34	17	2803	0.67	-0.97	-0.31	-3.53e-03	0.81	0.13	-0.12	8.33e-03	5.68e-04	-0.12
34	17	2804	0.95	-0.66	0.24	4.74e-02	0.80	0.28	-0.31	-1.99e-02	-1.47e-02	-0.29
34	17	2805	0.77	-0.87	-0.14	3.54e-02	0.81	6.48e-02	-0.11	-3.99e-02	-4.12e-03	-8.50e-02
34	17	2806	0.48	-1.08	-0.74	0.14	0.65	0.42	-0.20	0.13	8.34e-02	-0.31
34	17	2807	1.36	-0.16	1.10	0.10	0.57	4.43e-02	-9.12e-02	-3.92e-02	-7.76e-03	-6.59e-02
34	17	2808	2.81	-0.36	2.63	-0.18	0.74	0.24	-0.39	-0.11	-4.34e-02	-0.31
34	17	2809	2.43	-0.24	2.15	3.47e-02	0.81	0.10	-6.94e-02	2.88e-02	2.14e-03	-8.38e-02
34	17	2810	2.28	-0.26	1.99	3.18e-02	0.81	0.27	-0.31	-8.98e-03	-2.80e-02	-0.29
34	17	2811	2.39	-0.24	2.08	7.07e-02	0.85	0.12	-0.11	1.31e-02	3.05e-03	-0.12
34	17	2812	2.52	-0.38	2.21	-6.94e-02	0.89	0.28	-0.28	7.59e-04	2.24e-03	-0.28
34	17	2813	2.61	-0.24	2.29	8.37e-02	0.90	0.11	-0.12	-1.34e-02	-1.18e-03	-0.11
34	17	2814	2.62	-0.46	2.32	-0.16	0.91	0.27	-0.28	-5.17e-03	2.01e-04	-0.28
34	17	2815	2.69	-0.46	2.39	-0.16	0.92	0.10	-0.12	-1.62e-02	-2.18e-03	-0.11
34	17	2816	0.81	-1.05	-6.97e-02	-0.16	0.93	0.27	-0.28	-5.46e-03	-2.22e-04	-0.27
34	17	2817	0.16	-2.82	-2.49	-0.17	0.93	0.10	-0.12	-1.83e-02	-3.14e-03	-0.11
34	17	2818	0.16	-2.85	-2.51	-0.17	0.94	0.26	-0.28	-1.31e-02	-2.55e-03	-0.27
34	17	2819	0.12	-2.97	-2.65	-0.19	0.93	8.31e-02	-0.14	-4.96e-02	-8.57e-03	-0.11
34	17	2820	0.13	-2.97	-2.66	-0.18	0.93	0.30	-0.26	9.94e-03	2.92e-02	-0.28
34	17	2821	0.11	-2.90	-2.57	-0.23	0.95	6.46e-02	-8.21e-02	-1.56e-02	-1.99e-03	-7.30e-02
34	17	2822	0.16	-2.78	-2.42	-0.19	0.96	0.25	-0.30	-2.32e-02	-2.99e-02	-0.27
34	17	2823	0.16	-2.75	-2.35	-0.24	1.01	0.11	-0.11	9.64e-04	7.71e-04	-0.11
34	17	2824	0.29	-2.76	-2.28	-0.19	1.11	0.26	-0.26	-2.98e-03	1.68e-03	-0.26
34	17	2825	0.28	-2.63	-2.10	-0.25	1.13	9.01e-02	-0.12	-2.54e-02	-3.54e-03	-0.10
34	17	2826	0.41	-2.48	-1.87	-0.20	1.18	0.25	-0.26	-9.74e-03	-2.50e-04	-0.25
34	17	2827	0.36	-2.25	-1.61	-0.27	1.12	8.61e-02	-0.12	-2.92e-02	-3.88e-03	-0.10
34	17	2828	0.45	-1.98	-1.33	-0.20	1.08	0.24	-0.26	-2.09e-02	-2.46e-03	-0.25
34	17	2829	0.15	-1.44	-1.03	-0.27	0.70	4.60e-02	-0.18	-0.12	-1.60e-02	-0.10
34	17	2830	1.53e-02	-0.92	-0.65	-0.26	0.43	0.15	-0.36	-0.21	-1.10e-03	-0.23
34	17	2831	-3.71e-02	-1.49	-0.53	-0.99	0.69	-0.29	-1.91	-1.91	-0.29	1.48e-02
34	17	2832	1.72	-0.25	0.50	0.97	0.95	1.40	0.28	1.40	0.28	-3.11e-02
34	17	2833	1.29	-0.37	0.50	0.42	0.83	0.33	-0.15	0.17	1.44e-02	-0.22
34	17	2834	1.78	-0.76	0.74	0.28	1.25	0.16	-4.02e-02	9.91e-02	1.58e-02	-8.84e-02
34	17	2835	2.32	-1.12	0.92	0.28	1.69	0.27	-0.24	1.92e-02	3.06e-03	-0.26
34	17	2836	2.48	-1.18	1.06	0.25	1.78	0.11	-8.27e-02	2.56e-02	4.96e-03	-9.74e-02
34	17	2837	2.65	-1.23	1.17	0.24	1.88	0.27	-0.26	9.08e-03	2.03e-03	-0.26
34	17	2838	2.66	-1.18	1.26	0.22	1.84	0.11	-8.78e-02	2.12e-02	4.41e-03	-0.10
34	17	2839	2.67	-1.15	1.32	0.20	1.82	0.27	-0.26	2.99e-03	4.25e-04	-0.27
34	17	2840	2.59	-1.04	1.36	0.20	1.72	0.10	-9.53e-02	6.18e-03	2.51e-03	-9.96e-02
34	17	2841	2.52	-0.96	1.37	0.19	1.64	0.28	-0.26	8.86e-03	6.57e-03	-0.27
34	17	2842	2.49	-0.92	1.39	0.18	1.59	0.12	-0.10	1.46e-02	3.33e-03	-0.11
34	17	2843	2.46	-0.90	1.39	0.17	1.57	0.27	-0.27	4.81e-03	-2.99e-03	-0.27
34	17	2844	2.46	-0.95	1.37	0.15	1.59	0.12	-8.35e-02	3.34e-02	5.94e-03	-0.10

34	17	2845	2.45	-0.97	1.32	0.16	1.61	0.29	-0.27	1.29e-02	3.47e-03	-0.28
34	17	2846	2.40	-0.99	1.27	0.14	1.59	0.12	-9.76e-02	1.58e-02	3.36e-03	-0.11
34	17	2847	2.35	-1.00	1.21	0.14	1.59	0.29	-0.28	5.81e-03	1.27e-03	-0.28
34	17	2848	2.29	-1.02	1.15	0.12	1.57	0.12	-9.98e-02	1.37e-02	2.57e-03	-0.11
34	17	2849	2.24	-1.03	1.08	0.13	1.57	0.29	-0.28	5.32e-03	7.74e-04	-0.28
34	17	2850	2.18	-1.06	1.01	0.11	1.55	0.12	-0.10	1.12e-02	1.78e-03	-0.11
34	17	2851	2.12	-1.08	0.93	0.11	1.55	0.29	-0.29	-1.49e-03	-1.28e-03	-0.29
34	17	2852	2.02	-1.08	0.85	0.10	1.51	0.10	-0.11	-4.95e-03	-2.09e-04	-0.11
34	17	2853	1.94	-1.09	0.76	8.94e-02	1.47	0.29	-0.28	5.16e-03	5.60e-03	-0.29
34	17	2854	1.89	-1.11	0.70	7.51e-02	1.47	0.12	-0.11	6.39e-03	1.20e-03	-0.12
34	17	2855	1.86	-1.13	0.66	6.56e-02	1.47	0.29	-0.29	1.04e-03	-4.38e-03	-0.29
34	17	2856	1.83	-1.20	0.59	3.53e-02	1.49	0.12	-9.60e-02	2.17e-02	3.09e-03	-0.11
34	17	2857	1.54	-1.50	1.76e-02	2.11e-02	1.52	0.29	-0.29	5.47e-03	-5.22e-05	-0.29
34	17	2858	1.50	-1.54	-4.50e-02	1.00e-02	1.52	0.12	-0.11	8.18e-03	1.21e-03	-0.12
34	17	2859	1.60	-1.41	0.15	4.30e-02	1.50	0.29	-0.31	-1.14e-02	-9.51e-03	-0.30
34	17	2860	1.20	-1.84	-0.62	-2.85e-02	1.49	8.61e-02	-0.11	-2.33e-02	-2.29e-03	-9.83e-02
34	17	2861	1.00	-2.24	-1.24	-1.00e-02	1.50	0.37	-0.25	7.92e-02	4.43e-02	-0.31
34	17	2862	1.41	-1.70	-0.27	-2.14e-02	1.55	4.96e-02	-9.34e-02	-3.92e-02	-4.62e-03	-6.94e-02
34	17	2863	1.80	-1.55	0.24	9.77e-03	1.67	0.30	-0.27	2.21e-02	5.29e-03	-0.29
34	17	2864	2.19	-1.35	0.87	-3.47e-02	1.71	0.18	-0.17	6.85e-03	8.00e-04	-0.17
34	17	2865	2.75	-1.08	1.83	-0.17	1.63	0.20	-0.35	-0.11	-3.90e-02	-0.27
34	17	2866	2.41	-1.07	1.42	-8.94e-02	1.57	0.13	-9.57e-02	2.86e-02	2.59e-03	-0.11
34	17	2867	1.62	-1.54	0.17	-8.88e-02	1.58	0.29	-0.30	-2.58e-03	-1.14e-02	-0.29
34	17	2868	1.73	-1.60	0.28	-0.15	1.65	9.58e-02	-8.74e-02	7.75e-03	6.97e-04	-9.15e-02
34	17	2869	1.82	-1.63	0.24	-4.84e-02	1.72	0.30	-0.30	-1.61e-03	1.41e-03	-0.30
34	17	2870	1.11	-2.51	-1.24	-0.16	1.73	9.20e-02	-0.10	-1.05e-02	-1.03e-03	-9.76e-02
34	17	2871	1.12	-2.54	-1.28	-0.15	1.74	0.29	-0.30	-4.70e-03	-8.24e-05	-0.29
34	17	2872	1.10	-2.56	-1.29	-0.17	1.74	8.82e-02	-0.10	-1.37e-02	-1.94e-03	-9.59e-02
34	17	2873	1.09	-2.60	-1.33	-0.18	1.75	0.29	-0.29	-5.94e-03	-8.93e-04	-0.29
34	17	2874	1.07	-2.62	-1.36	-0.20	1.75	8.63e-02	-0.11	-1.62e-02	-2.80e-03	-9.56e-02
34	17	2875	1.05	-2.65	-1.40	-0.20	1.75	0.28	-0.29	-1.05e-02	-2.87e-03	-0.29
34	17	2876	0.98	-2.66	-1.44	-0.23	1.72	6.66e-02	-0.11	-3.77e-02	-5.61e-03	-8.68e-02
34	17	2877	0.91	-2.64	-1.51	-0.22	1.66	0.28	-0.27	2.89e-04	1.21e-02	-0.28
34	17	2878	0.96	-2.57	-1.42	-0.19	1.65	0.11	-0.13	-1.43e-02	-3.27e-03	-0.12
34	17	2879	1.02	-2.58	-1.37	-0.19	1.70	0.26	-0.29	-1.33e-02	-1.49e-02	-0.27
34	17	2880	1.05	-2.78	-1.44	-0.29	1.82	8.21e-02	-8.62e-02	-2.80e-03	-1.37e-03	-8.41e-02
34	17	2881	1.23	-2.88	-1.40	-0.24	1.97	0.27	-0.28	-5.30e-03	8.08e-05	-0.28
34	17	2882	1.23	-2.90	-1.33	-0.35	2.01	7.82e-02	-0.10	-2.06e-02	-3.27e-03	-8.97e-02
34	17	2883	1.34	-2.89	-1.25	-0.29	2.06	0.27	-0.28	-8.92e-03	-1.24e-03	-0.27
34	17	2884	1.25	-2.76	-1.12	-0.38	1.97	7.27e-02	-0.10	-2.65e-02	-3.98e-03	-8.72e-02
34	17	2885	1.26	-2.58	-1.02	-0.30	1.88	0.26	-0.27	-1.64e-02	-1.21e-03	-0.27
34	17	2886	0.83	-2.02	-0.83	-0.36	1.41	2.90e-02	-0.14	-0.10	-1.41e-02	-7.50e-02
34	17	2887	0.48	-1.36	-0.51	-0.37	0.92	0.16	-0.32	-0.16	-5.40e-03	-0.23
34	17	2888	0.33	-1.73	-0.52	-0.89	1.01	-0.28	-1.42	-1.42	-0.28	-3.61e-02
34	17	2889	1.86	-0.42	0.61	0.84	1.14	0.89	0.14	0.89	0.14	-1.21e-02
34	17	2890	1.55	-0.69	0.50	0.36	1.12	0.27	-0.16	0.11	4.20e-03	-0.21
34	17	2891	2.19	-1.10	0.71	0.38	1.64	0.13	-5.41e-02	7.01e-02	7.27e-03	-8.73e-02
34	17	2892	2.69	-1.57	0.85	0.27	2.11	0.26	-0.25	1.39e-02	-1.36e-03	-0.25
34	17	2893	2.94	-1.61	1.01	0.31	2.25	0.11	-8.79e-02	2.01e-02	2.46e-03	-9.88e-02
34	17	2894	3.13	-1.72	1.13	0.28	2.38	0.26	-0.26	7.84e-03	-1.04e-04	-0.26
34	17	2895	3.20	-1.66	1.25	0.30	2.38	0.11	-9.31e-02	1.60e-02	2.23e-03	-0.10
34	17	2896	3.24	-1.65	1.33	0.26	2.39	0.27	-0.26	5.48e-03	1.15e-04	-0.27
34	17	2897	3.20	-1.56	1.39	0.25	2.31	0.11	-9.79e-02	7.70e-03	5.98e-04	-0.10
34	17	2898	3.16	-1.51	1.41	0.25	2.26	0.27	-0.27	4.14e-03	-3.58e-03	-0.27
34	17	2899	3.14	-1.48	1.43	0.23	2.23	0.11	-9.72e-02	1.26e-02	1.68e-03	-0.10
34	17	2900	3.11	-1.49	1.41	0.21	2.22	0.28	-0.27	8.68e-03	2.98e-03	-0.27
34	17	2901	3.14	-1.47	1.39	0.28	2.24	0.12	-9.20e-02	2.33e-02	3.14e-03	-0.10
34	17	2902	3.12	-1.54	1.35	0.22	2.26	0.28	-0.27	8.77e-03	-4.99e-04	-0.28
34	17	2903	3.10	-1.54	1.32	0.24	2.26	0.12	-0.10	1.36e-02	1.40e-03	-0.11
34	17	2904	3.06	-1.59	1.27	0.20	2.26	0.28	-0.28	5.62e-03	-5.67e-04	-0.28
34	17	2905	3.02	-1.60	1.22	0.20	2.25	0.12	-0.10	1.10e-02	8.54e-04	-0.11
34	17	2906	2.96	-1.65	1.14	0.17	2.25	0.29	-0.28	4.82e-03	-8.31e-04	-0.28
34	17	2907	2.91	-1.68	1.07	0.16	2.25	0.12	-0.11	8.16e-03	3.32e-04	-0.11
34	17	2908	2.84	-1.73	0.98	0.13	2.24	0.29	-0.29	1.84e-03	-7.01e-04	-0.29
34	17	2909	2.74	-1.75	0.87	0.11	2.21	0.11	-0.11	-9.76e-04	-1.14e-03	-0.11
34	17	2910	2.65	-1.78	0.75	0.12	2.19	0.29	-0.29	6.41e-04	-4.09e-03	-0.29
34	17	2911	2.56	-1.85	0.62	9.39e-02	2.19	0.11	-0.11	5.61e-03	4.06e-04	-0.11
34	17	2912	2.48	-1.92	0.48	8.23e-02	2.19	0.29	-0.29	4.32e-03	2.97e-03	-0.29
34	17	2913	2.44	-1.99	0.35	0.11	2.21	0.12	-0.10	1.58e-02	2.48e-03	-0.11
34	17	2914	2.44	-2.02	0.33	8.97e-02	2.23	0.29	-0.29	-1.47e-03	-2.76e-03	-0.29
34	17	2915	2.16	-2.31	-0.17	2.88e-02	2.23	0.11	-0.12	-1.05e-02	-7.17e-04	-0.11
34	17	2916	1.86	-2.71	-0.85	-3.55e-03	2.24	0.33	-0.26	4.60e-02	2.24e-02	-0.30
34	17	2917	2.09	-2.52	-0.42	-1.90e-02	2.30	7.48e-02	-0.10	-2.35e-02	-2.68e-03	-8.72e-02
34	17	2918	2.31	-2.49	-0.20	1.98e-02	2.39	0.30	-0.27	2.23e-02	9.88e-03	-0.29
34	17	2919	2.53	-2.44	0.13	-4.53e-02	2.48	0.16	-0.14	1.90e-02	1.33e-03	-0.15
34	17	2920	3.07	-2.12	1.10	-0.15	2.52	0.20	-0.34	-8.50e-02	-5.23e-02	-0.27
34	17	2921	2.58	-2.32	0.39	-0.13	2.44	0.15	-0.14	8.56e-03	6.38e-04	-0.15
34	17	2922	2.03	-2.66	-0.48	-0.15	2.34	0.29	-0.27	5.66e-03	1.91e-02	-0.28
34	17	2923	2.10	-2.47	-0.27	-0.10	2.28	9.05e-02	-0.12	-2.74e-02	-1.87e-03	-0.10

34	17	2924	1.84	-2.74	-0.79	-0.11	2.27	0.33	-0.26	4.93e-02	2.62e-02	-0.29
34	17	2925	1.86	-2.84	-0.89	-8.64e-02	2.31	8.46e-02	-0.10	-1.53e-02	-7.65e-04	-9.23e-02
34	17	2926	1.90	-2.85	-0.80	-0.15	2.35	0.29	-0.30	-6.89e-03	-1.82e-03	-0.30
34	17	2927	1.79	-2.98	-1.00	-0.18	2.35	9.29e-02	-0.10	-6.98e-03	-5.91e-04	-9.66e-02
34	17	2928	1.76	-3.01	-1.06	-0.18	2.34	0.29	-0.30	-4.62e-03	2.09e-04	-0.29
34	17	2929	1.67	-3.10	-1.20	-0.23	2.34	8.90e-02	-0.10	-1.10e-02	-1.88e-03	-9.53e-02
34	17	2930	1.65	-3.13	-1.27	-0.21	2.33	0.29	-0.30	-6.84e-03	-1.02e-03	-0.29
34	17	2931	1.55	-3.23	-1.38	-0.29	2.33	8.60e-02	-0.10	-1.46e-02	-3.23e-03	-9.47e-02
34	17	2932	1.56	-3.24	-1.45	-0.23	2.32	0.29	-0.29	-5.56e-03	4.76e-04	-0.29
34	17	2933	1.38	-3.35	-1.61	-0.35	2.28	8.09e-02	-9.41e-02	-9.39e-03	-3.79e-03	-8.74e-02
34	17	2934	1.34	-3.41	-1.83	-0.24	2.24	0.24	-0.32	-5.53e-02	-2.63e-02	-0.28
34	17	2935	1.45	-3.12	-1.44	-0.23	2.20	0.10	-0.12	-1.01e-02	-1.31e-03	-0.11
34	17	2936	1.58	-2.94	-1.13	-0.23	2.22	0.31	-0.24	4.12e-02	2.48e-02	-0.28
34	17	2937	1.55	-3.20	-1.34	-0.31	2.32	7.14e-02	-9.97e-02	-2.41e-02	-4.13e-03	-8.50e-02
34	17	2938	1.66	-3.27	-1.32	-0.29	2.41	0.27	-0.28	-1.10e-02	-3.96e-03	-0.28
34	17	2939	1.61	-3.31	-1.30	-0.40	2.41	7.94e-02	-9.84e-02	-1.50e-02	-3.95e-03	-8.87e-02
34	17	2940	1.70	-3.22	-1.20	-0.31	2.42	0.27	-0.28	-8.84e-03	-1.67e-03	-0.27
34	17	2941	1.53	-3.10	-1.14	-0.43	2.29	7.32e-02	-9.88e-02	-2.14e-02	-4.24e-03	-8.55e-02
34	17	2942	1.57	-2.84	-1.00	-0.28	2.18	0.26	-0.27	-1.23e-02	1.71e-03	-0.26
34	17	2943	1.00	-2.42	-0.97	-0.45	1.69	4.71e-02	-0.11	-5.39e-02	-4.17e-03	-7.20e-02
34	17	2944	0.52	-1.79	-0.93	-0.33	1.12	0.14	-0.31	-0.15	-2.29e-02	-0.22
34	17	2945	0.34	-1.84	-0.78	-0.72	1.09	-0.14	-0.88	-0.88	-0.14	-1.65e-02
34	17	2946	1.41	-0.92	0.32	0.17	1.16	0.39	0.11	0.39	0.11	-5.65e-03
34	17	2947	1.54	-0.91	0.46	0.17	1.22	0.24	-0.16	5.60e-02	1.77e-02	-0.20
34	17	2948	2.35	-1.14	0.83	0.38	1.73	0.10	-5.55e-02	3.69e-02	1.04e-02	-7.80e-02
34	17	2949	2.92	-1.57	1.18	0.17	2.19	0.25	-0.24	6.72e-03	5.81e-04	-0.25
34	17	2950	3.39	-1.50	1.52	0.37	2.38	0.10	-8.56e-02	1.47e-02	2.49e-03	-9.40e-02
34	17	2951	3.68	-1.65	1.79	0.25	2.55	0.26	-0.25	6.47e-03	-1.77e-04	-0.26
34	17	2952	3.95	-1.50	2.05	0.40	2.60	0.11	-9.12e-02	1.22e-02	1.66e-03	-9.80e-02
34	17	2953	4.06	-1.58	2.22	0.26	2.65	0.27	-0.26	6.50e-03	3.12e-04	-0.26
34	17	2954	4.20	-1.42	2.40	0.38	2.62	0.11	-9.44e-02	9.23e-03	1.33e-03	-9.97e-02
34	17	2955	4.20	-1.48	2.47	0.25	2.61	0.27	-0.26	5.71e-03	-1.16e-04	-0.27
34	17	2956	4.31	-1.36	2.56	0.39	2.61	0.11	-9.39e-02	1.09e-02	1.32e-03	-9.99e-02
34	17	2957	4.26	-1.47	2.56	0.23	2.62	0.27	-0.27	7.86e-03	-1.16e-04	-0.27
34	17	2958	4.36	-1.36	2.58	0.42	2.65	0.11	-9.42e-02	1.53e-02	1.37e-03	-0.10
34	17	2959	4.29	-1.54	2.51	0.24	2.69	0.28	-0.27	7.31e-03	-7.54e-04	-0.27
34	17	2960	4.33	-1.47	2.49	0.38	2.70	0.11	-9.89e-02	1.13e-02	1.08e-03	-0.10
34	17	2961	4.22	-1.62	2.39	0.22	2.71	0.28	-0.27	6.16e-03	8.64e-05	-0.28
34	17	2962	4.23	-1.57	2.32	0.33	2.72	0.11	-0.10	9.11e-03	1.30e-03	-0.11
34	17	2963	4.09	-1.72	2.18	0.19	2.73	0.28	-0.28	5.27e-03	4.65e-04	-0.28
34	17	2964	4.06	-1.71	2.07	0.28	2.74	0.11	-0.10	6.82e-03	1.45e-03	-0.11
34	17	2965	3.90	-1.85	1.89	0.16	2.74	0.28	-0.28	3.96e-03	1.15e-03	-0.28
34	17	2966	3.80	-1.87	1.72	0.21	2.73	0.11	-0.11	2.77e-03	1.03e-03	-0.11
34	17	2967	3.62	-1.99	1.49	0.13	2.72	0.29	-0.28	2.44e-03	4.26e-04	-0.29
34	17	2968	3.51	-2.06	1.27	0.18	2.73	0.11	-0.10	4.79e-03	8.31e-04	-0.11
34	17	2969	3.33	-2.23	1.00	9.58e-02	2.75	0.29	-0.28	3.65e-03	-6.31e-05	-0.29
34	17	2970	3.21	-2.39	0.68	0.15	2.79	0.11	-0.11	3.10e-03	8.29e-05	-0.11
34	17	2971	3.00	-2.68	0.28	4.35e-02	2.83	0.30	-0.28	1.42e-02	5.71e-03	-0.29
34	17	2972	3.04	-2.73	0.24	7.55e-02	2.88	9.72e-02	-0.11	-1.00e-02	-1.63e-03	-0.10
34	17	2973	3.08	-2.85	0.25	-2.67e-02	2.96	0.30	-0.26	2.55e-02	1.03e-02	-0.28
34	17	2974	3.19	-2.91	0.26	2.16e-02	3.04	0.13	-0.13	8.97e-03	4.58e-04	-0.13
34	17	2975	3.29	-2.80	0.46	3.05e-02	3.04	0.24	-0.31	-4.77e-02	-3.13e-02	-0.27
34	17	2976	2.85	-3.10	-0.15	-0.10	2.98	0.14	-0.13	1.11e-02	3.99e-04	-0.13
34	17	2977	2.41	-3.49	-0.86	-0.22	2.93	0.29	-0.28	5.43e-03	5.77e-03	-0.28
34	17	2978	2.43	-3.24	-0.64	-0.17	2.83	9.14e-02	-0.10	-1.19e-02	-4.49e-04	-9.74e-02
34	17	2979	2.50	-3.04	-0.56	1.13e-02	2.76	0.29	-0.28	-2.14e-03	1.04e-02	-0.29
34	17	2980	2.26	-3.23	-0.80	-0.16	2.72	9.32e-02	-0.11	-1.74e-02	-1.10e-03	-0.10
34	17	2981	2.24	-3.12	-0.83	-5.28e-02	2.65	0.30	-0.25	3.36e-02	1.40e-02	-0.28
34	17	2982	1.92	-3.38	-1.23	-0.22	2.60	0.12	-0.14	-1.59e-02	-3.76e-03	-0.13
34	17	2983	1.82	-3.52	-1.55	-0.15	2.57	0.26	-0.27	-8.00e-03	-3.19e-03	-0.27
34	17	2984	1.62	-3.71	-1.82	-0.27	2.55	0.12	-0.13	-6.29e-03	-2.26e-03	-0.12
34	17	2985	1.58	-3.78	-2.01	-0.19	2.52	0.26	-0.27	-5.33e-03	-1.13e-03	-0.27
34	17	2986	1.42	-3.93	-2.20	-0.31	2.51	0.12	-0.13	-9.20e-03	-1.90e-03	-0.12
34	17	2987	1.43	-3.97	-2.32	-0.22	2.48	0.26	-0.27	-7.13e-03	-7.55e-04	-0.26
34	17	2988	1.29	-4.10	-2.47	-0.34	2.47	0.12	-0.13	-1.19e-02	-1.38e-03	-0.12
34	17	2989	1.33	-4.12	-2.56	-0.23	2.46	0.26	-0.26	-4.76e-03	1.49e-03	-0.26
34	17	2990	1.17	-4.26	-2.72	-0.37	2.44	0.12	-0.12	-2.37e-03	4.20e-04	-0.12
34	17	2991	1.23	-4.31	-2.83	-0.25	2.45	0.23	-0.29	-4.69e-02	-1.66e-02	-0.26
34	17	2992	1.20	-4.14	-2.54	-0.39	2.44	8.66e-02	-9.71e-02	-9.40e-03	-1.08e-03	-9.18e-02
34	17	2993	1.36	-3.79	-2.18	-0.24	2.39	0.29	-0.24	3.24e-02	1.57e-02	-0.26
34	17	2994	1.22	-3.83	-2.22	-0.40	2.35	0.11	-0.14	-2.35e-02	-4.24e-03	-0.12
34	17	2995	1.31	-3.73	-2.14	-0.28	2.34	0.24	-0.26	-1.12e-02	-2.63e-03	-0.25
34	17	2996	1.19	-3.63	-2.02	-0.42	2.28	0.11	-0.12	-1.09e-02	-2.11e-03	-0.11
34	17	2997	1.30	-3.37	-1.80	-0.27	2.21	0.24	-0.25	-7.48e-03	-7.96e-04	-0.24
34	17	2998	1.39	-2.98	-1.57	-1.82e-02	2.04	0.10	-0.12	-1.44e-02	-3.29e-03	-0.11
34	17	2999	1.23	-2.68	-1.28	-0.18	1.88	0.23	-0.24	-5.08e-03	-1.65e-03	-0.24
34	17	3000	1.13	-2.02	-0.99	9.95e-02	1.48	7.69e-02	-0.12	-2.78e-02	-1.20e-02	-9.64e-02
34	17	3001	0.59	-1.55	-0.72	-0.24	1.05	0.14	-0.26	-8.98e-02	-3.05e-02	-0.19
34	17	3002	0.70	-1.31	-0.50	-0.11	0.99	-0.11	-0.38	-0.38	-0.11	2.98e-03

34	17	3003	0.63	-1.61	-0.54	-0.44	1.12	0.11	-8.37e-02	-7.74e-02	0.10	-3.43e-02
34	17	3004	1.15	-1.26	0.11	-0.22	1.19	0.25	-0.19	1.08e-02	5.33e-02	-0.22
34	17	3005	2.28	-1.19	1.05	4.34e-02	1.66	9.80e-02	-7.51e-02	8.23e-03	1.46e-02	-8.65e-02
34	17	3006	3.11	-1.39	1.67	5.26e-02	2.10	0.25	-0.24	4.03e-03	8.49e-03	-0.25
34	17	3007	3.88	-1.09	2.31	0.48	2.31	8.65e-02	-0.10	5.54e-03	-1.99e-02	-9.28e-02
34	17	3008	4.32	-1.25	2.76	0.31	2.50	0.24	-0.26	4.31e-03	-1.99e-02	-0.25
34	17	3009	4.79	-1.00	3.22	0.57	2.58	0.15	-7.37e-02	9.33e-02	-1.92e-02	-9.54e-02
34	17	3010	5.01	-1.14	3.51	0.37	2.65	0.30	-0.22	9.51e-02	-1.97e-02	-0.26
34	17	3011	5.30	-0.90	3.80	0.61	2.66	0.15	-7.44e-02	9.80e-02	-1.97e-02	-9.71e-02
34	17	3012	5.34	-1.06	3.91	0.37	2.67	0.25	-0.27	-3.07e-03	-2.02e-02	-0.26
34	17	3013	5.51	-0.85	4.04	0.62	2.69	9.68e-02	-9.91e-02	2.29e-03	-4.68e-03	-9.79e-02
34	17	3014	5.44	-1.09	4.00	0.35	2.71	0.26	-0.27	-1.85e-03	-4.95e-03	-0.26
34	17	3015	5.56	-0.90	4.04	0.63	2.74	0.10	-9.99e-02	3.67e-03	-3.04e-03	-0.10
34	17	3016	5.46	-1.17	3.94	0.34	2.78	0.26	-0.27	-1.27e-03	-4.13e-03	-0.27
34	17	3017	5.52	-1.00	3.93	0.59	2.80	0.10	-0.10	2.66e-03	-2.99e-03	-0.10
34	17	3018	5.35	-1.26	3.77	0.32	2.82	0.27	-0.27	-9.43e-04	-4.25e-03	-0.27
34	17	3019	5.35	-1.14	3.68	0.53	2.84	0.10	-0.10	3.00e-03	-3.20e-03	-0.10
34	17	3020	5.14	-1.39	3.46	0.29	2.85	0.27	-0.27	-6.88e-04	-4.23e-03	-0.27
34	17	3021	5.08	-1.32	3.30	0.47	2.87	0.10	-0.10	3.00e-03	-3.25e-03	-0.10
34	17	3022	4.84	-1.56	3.03	0.25	2.88	0.27	-0.28	-6.69e-04	-4.01e-03	-0.27
34	17	3023	4.71	-1.53	2.80	0.38	2.88	0.10	-0.11	8.69e-04	-3.03e-03	-0.11
34	17	3024	4.41	-1.76	2.45	0.20	2.87	0.28	-0.28	-4.80e-04	-3.29e-03	-0.28
34	17	3025	4.24	-1.83	2.11	0.30	2.90	0.10	-0.11	1.41e-03	-1.85e-03	-0.10
34	17	3026	3.95	-2.09	1.71	0.15	2.92	0.28	-0.28	8.85e-04	-1.11e-03	-0.28
34	17	3027	3.82	-2.25	1.35	0.22	2.98	0.10	-0.11	-1.48e-03	-9.13e-04	-0.11
34	17	3028	3.74	-2.49	1.07	0.17	3.08	0.28	-0.27	7.70e-03	2.24e-04	-0.28
34	17	3029	3.66	-2.73	0.76	0.17	3.18	0.11	-0.11	-1.89e-03	9.56e-05	-0.11
34	17	3030	3.40	-3.12	0.44	-0.15	3.25	0.26	-0.27	-6.11e-03	1.40e-03	-0.27
34	17	3031	3.31	-3.27	5.25e-02	-1.45e-02	3.29	0.14	-0.14	4.59e-03	1.19e-03	-0.14
34	17	3032	2.94	-3.39	-0.43	-1.66e-02	3.15	0.27	-0.27	-3.14e-03	1.88e-03	-0.27
34	17	3033	2.60	-3.39	-0.63	-0.16	2.99	9.66e-02	-9.57e-02	7.91e-04	1.38e-04	-9.62e-02
34	17	3034	2.62	-3.48	-0.82	-3.69e-02	3.02	0.28	-0.29	-5.19e-04	-6.92e-03	-0.28
34	17	3035	2.34	-3.80	-1.25	-0.21	3.03	0.11	-0.11	-3.05e-03	-6.06e-04	-0.11
34	17	3036	2.13	-3.89	-1.59	-0.16	2.92	0.28	-0.28	5.88e-04	4.13e-03	-0.28
34	17	3037	1.80	-4.11	-1.97	-0.35	2.84	0.10	-0.10	-3.09e-03	1.79e-03	-0.10
34	17	3038	1.75	-4.21	-2.36	-9.27e-02	2.75	0.27	-0.26	2.30e-03	5.13e-03	-0.27
34	17	3039	1.31	-4.47	-2.66	-0.49	2.68	0.14	-0.14	-2.87e-03	3.28e-03	-0.14
34	17	3040	1.38	-4.51	-2.88	-0.25	2.64	0.25	-0.25	-6.49e-04	3.58e-03	-0.25
34	17	3041	1.08	-4.77	-3.18	-0.52	2.60	0.13	-0.14	-5.10e-03	3.28e-03	-0.14
34	17	3042	1.18	-4.81	-3.36	-0.27	2.57	0.25	-0.25	-1.17e-03	4.03e-03	-0.25
34	17	3043	0.90	-5.05	-3.61	-0.55	2.55	0.13	-0.14	-5.87e-03	3.64e-03	-0.13
34	17	3044	1.03	-5.06	-3.72	-0.31	2.52	0.25	-0.24	-1.25e-03	4.52e-03	-0.25
34	17	3045	0.78	-5.24	-3.90	-0.56	2.51	0.13	-0.13	-6.27e-03	3.88e-03	-0.13
34	17	3046	0.95	-5.20	-3.93	-0.32	2.49	0.24	-0.24	-1.27e-03	4.98e-03	-0.24
34	17	3047	0.76	-5.29	-4.00	-0.52	2.48	0.13	-0.13	-5.87e-03	3.75e-03	-0.13
34	17	3048	0.86	-5.20	-3.91	-0.43	2.48	0.26	-0.24	-3.49e-03	2.28e-02	-0.25
34	17	3049	0.67	-5.32	-4.02	-0.62	2.47	9.46e-02	-9.40e-02	-4.36e-03	4.94e-03	-9.42e-02
34	17	3050	0.91	-5.15	-3.97	-0.27	2.40	0.26	-0.24	6.47e-03	1.15e-02	-0.25
34	17	3051	0.56	-5.05	-3.80	-0.69	2.33	0.13	-0.12	-5.42e-03	1.55e-02	-0.13
34	17	3052	0.83	-4.70	-3.49	-0.38	2.28	0.24	-0.22	2.59e-03	1.48e-02	-0.23
34	17	3053	0.62	-4.47	-3.22	-0.62	2.19	0.13	-0.12	-3.12e-03	1.48e-02	-0.12
34	17	3054	0.87	-3.97	-2.77	-0.32	2.09	0.24	-0.22	3.04e-03	1.57e-02	-0.23
34	17	3055	1.02	-3.41	-2.33	-6.35e-02	1.90	0.11	-0.14	-5.29e-02	1.73e-02	-0.12
34	17	3056	1.05	-2.76	-1.68	-2.71e-02	1.72	0.23	-0.22	-2.85e-03	2.04e-02	-0.23
34	17	3057	1.49	-1.83	-1.10	0.76	1.37	0.13	-0.11	-1.34e-02	2.92e-02	-0.12
34	17	3058	1.14	-0.90	-3.53e-02	0.28	1.01	0.20	-0.21	-2.37e-03	-1.49e-02	-0.20
34	17	3059	1.42	-0.46	0.52	0.43	0.94	6.82e-02	-0.11	6.25e-02	-0.10	-3.13e-02
M_G			**N max**	**N min**	**N 1**	**N 2**	**N 1-2**	**M max**	**M min**	**M 1**	**M 2**	**M 1-2**
				-5.32	-4.33	-0.99	-0.04		-2.56	-2.56	-0.31	-0.34
			5.56		4.42	1.02	3.29	2.55		2.55	0.30	0.01

Macro	Tipo	Angolo 1-X (gradi)
35	**Guscio**	**0.0**

M_G	**CDC**	**Nodo**	**N max**	**N min**	**N 1**	**N 2**	**N 1-2**	**M max**	**M min**	**M 1**	**M 2**	**M 1-2**
			kN/ m	kN/ m	kN/ m	kN/ m	kN/ m	kN	kN	kN	kN	kN
35	17	3488	9.03	1.21	8.84	1.39	1.18	2.74	0.34	2.74	0.34	5.34e-02
35	17	3489	8.54	1.00	8.50	1.04	0.58	0.68	-6.66e-02	0.58	3.94e-02	-0.26
35	17	3490	4.98	0.94	4.98	0.95	-0.13	0.23	-0.21	2.18e-02	-1.20e-04	-0.22
35	17	3491	2.15	2.48e-02	2.08	9.43e-02	-0.38	0.17	-0.18	-4.48e-03	-5.63e-04	-0.18
35	17	3492	0.31	-1.76	-1.49	4.04e-02	-0.70	0.20	-0.16	3.82e-02	2.47e-03	-0.18
35	17	3493	0.40	-2.23	-1.66	-0.17	-1.08	0.19	-0.17	1.14e-02	-1.52e-04	-0.18
35	17	3494	0.18	-3.39	-2.97	-0.24	-1.15	0.19	-0.18	1.55e-02	-1.76e-03	-0.19
35	17	3495	0.28	-2.62	-2.03	-0.30	-1.16	0.20	-0.16	3.93e-02	3.81e-03	-0.18
35	17	3496	-0.46	-4.08	-3.88	-0.66	-0.83	0.31	-0.17	0.12	9.33e-03	-0.23

35	17	3497	-1.24	-11.35	-11.35	-1.24	-2.49e-02	0.16	-0.46	-0.32	1.24e-02	-0.26
35	17	3498	-0.45	-4.13	-4.08	-0.50	0.42	6.71e-02	-5.49e-02	7.89e-03	4.33e-03	6.09e-02
35	17	3499	3.06	0.72	3.06	0.72	-1.91e-02	0.47	-0.14	0.34	-6.92e-03	-0.25
35	17	3500	0.24	-1.79	-1.44	-0.12	-0.77	0.20	-0.27	-6.39e-02	-1.93e-03	-0.23
35	17	3501	0.59	-2.66	-1.95	-0.13	-1.35	0.18	-0.20	-1.41e-02	-1.03e-03	-0.19
35	17	3502	0.65	-3.51	-2.50	-0.37	-1.78	0.21	-0.18	2.59e-02	4.59e-03	-0.20
35	17	3503	0.88	-3.56	-2.48	-0.20	-1.90	0.20	-0.19	1.24e-02	1.61e-03	-0.19
35	17	3504	0.75	-3.75	-2.63	-0.36	-1.95	0.21	-0.19	1.60e-02	6.98e-04	-0.20
35	17	3505	0.88	-3.76	-2.67	-0.21	-1.97	0.20	-0.19	3.97e-03	-1.22e-03	-0.20
35	17	3506	0.37	-3.58	-2.85	-0.35	-1.53	0.20	-0.20	4.59e-03	-3.06e-03	-0.20
35	17	3507	0.41	-3.33	-2.67	-0.26	-1.43	0.21	-0.18	3.38e-02	2.68e-03	-0.20
35	17	3508	-0.14	-4.29	-3.82	-0.61	-1.31	0.31	-0.19	0.11	6.77e-03	-0.25
35	17	3509	-1.09	-9.16	-9.14	-1.11	-0.44	0.17	-0.48	-0.33	1.10e-02	-0.28
35	17	3510	-0.20	-2.27	-2.21	-0.27	0.35	5.87e-02	-5.27e-02	4.51e-03	1.45e-03	5.57e-02
35	17	3511	4.74	0.87	4.74	0.87	-1.94e-02	0.49	-0.16	0.34	-9.30e-03	-0.27
35	17	3512	2.33	-0.65	1.52	0.16	-1.32	0.21	-0.29	-8.40e-02	-4.12e-03	-0.25
35	17	3513	2.12	-1.69	0.39	4.42e-02	-1.90	0.19	-0.21	-2.30e-02	-1.86e-03	-0.20
35	17	3514	2.04	-2.01	7.83e-02	-5.52e-02	-2.02	0.21	-0.20	1.20e-02	4.00e-03	-0.20
35	17	3515	2.11	-2.12	-1.77e-02	4.81e-03	-2.11	0.21	-0.20	4.85e-03	1.78e-03	-0.20
35	17	3516	2.11	-2.12	-1.59e-02	1.84e-03	-2.11	0.21	-0.21	-6.51e-04	-1.33e-04	-0.21
35	17	3517	2.08	-2.12	-3.78e-02	-4.25e-03	-2.10	0.20	-0.20	-1.54e-04	-9.35e-04	-0.20
35	17	3518	1.99	-2.02	-9.46e-02	6.65e-02	-2.00	0.20	-0.21	-6.22e-03	-3.33e-03	-0.21
35	17	3519	1.62	-2.10	-0.42	-6.66e-02	-1.85	0.21	-0.19	1.46e-02	2.90e-04	-0.20
35	17	3520	0.56	-2.42	-1.68	-0.18	-1.29	0.29	-0.21	8.15e-02	3.84e-03	-0.25
35	17	3521	-0.85	-4.95	-4.95	-0.85	-1.69e-02	0.16	-0.48	-0.33	1.05e-02	-0.27
35	17	3522	2.06	0.17	2.00	0.23	0.33	5.05e-02	-6.09e-02	-8.26e-03	-2.17e-03	5.56e-02
35	17	3523	9.00	1.06	8.97	1.09	-0.45	0.48	-0.17	0.32	-1.27e-02	-0.28
35	17	3524	4.26	0.12	3.79	0.59	-1.32	0.20	-0.31	-0.10	-6.21e-03	-0.25
35	17	3525	3.49	-0.57	2.65	0.26	-1.64	0.18	-0.21	-3.30e-02	-2.89e-03	-0.20
35	17	3526	3.72	-0.56	2.82	0.34	-1.74	0.20	-0.20	-4.63e-03	3.55e-03	-0.20
35	17	3527	3.77	-0.90	2.66	0.20	-1.99	0.19	-0.20	-4.48e-03	8.16e-04	-0.20
35	17	3528	3.74	-0.78	2.61	0.36	-1.96	0.19	-0.21	-1.57e-02	-9.70e-05	-0.20
35	17	3529	3.57	-0.90	2.48	0.20	-1.92	0.19	-0.20	-1.25e-02	-2.02e-03	-0.19
35	17	3530	3.51	-0.66	2.49	0.37	-1.80	0.18	-0.21	-2.56e-02	-3.91e-03	-0.20
35	17	3531	2.65	-0.59	1.93	0.12	-1.35	0.19	-0.18	1.34e-02	5.02e-04	-0.19
35	17	3532	1.77	-0.24	1.41	0.12	-0.77	0.27	-0.20	6.29e-02	2.80e-03	-0.24
35	17	3533	-0.69	-3.02	-3.02	-0.69	-2.83e-02	0.14	-0.47	-0.34	7.79e-03	-0.25
35	17	3534	4.14	0.46	4.09	0.51	0.40	5.50e-02	-6.67e-02	-7.35e-03	-4.40e-03	6.08e-02
35	17	3535	11.33	1.22	11.33	1.22	-3.74e-02	0.46	-0.16	0.32	-1.38e-02	-0.26
35	17	3536	4.08	0.46	3.87	0.66	-0.84	0.18	-0.31	-0.12	-8.27e-03	-0.23
35	17	3537	2.61	-0.29	2.02	0.30	-1.17	0.16	-0.20	-3.93e-02	-4.12e-03	-0.18
35	17	3538	3.39	-0.19	2.96	0.24	-1.16	0.18	-0.19	-1.57e-02	1.73e-03	-0.19
35	17	3539	2.24	-0.41	1.66	0.16	-1.09	0.17	-0.18	-1.16e-02	2.40e-04	-0.18
35	17	3540	1.76	-0.31	1.49	-4.32e-02	-0.70	0.16	-0.20	-3.83e-02	-2.41e-03	-0.18
35	17	3541	-2.49e-02	-2.18	-2.11	-9.65e-02	-0.39	0.18	-0.17	4.41e-03	4.45e-04	-0.18
35	17	3542	-0.94	-4.98	-4.97	-0.94	-0.14	0.21	-0.23	-2.16e-02	4.27e-04	-0.22
35	17	3543	-0.99	-8.47	-8.43	-1.03	0.57	6.71e-02	-0.69	-0.58	-3.86e-02	-0.26
35	17	3544	-1.20	-8.96	-8.78	-1.38	1.16	-0.34	-2.75	-2.75	-0.34	5.34e-02
35	17	3545	3.35	-0.36	2.19	0.80	1.72	1.99	0.31	1.99	0.31	7.89e-02
35	17	3546	2.69	-0.46	1.76	0.48	1.44	0.38	-0.13	0.27	-1.63e-02	-0.21
35	17	3547	2.36	-0.27	1.68	0.41	1.16	0.24	-0.11	0.12	1.75e-02	-0.17
35	17	3548	2.39	-0.17	1.95	0.26	0.96	0.21	-0.21	5.45e-03	1.74e-03	-0.21
35	17	3549	1.80	2.49e-02	1.56	0.27	0.61	0.17	-0.13	3.36e-02	5.06e-03	-0.15
35	17	3550	2.47	0.25	2.44	0.28	0.26	0.22	-0.21	9.50e-03	5.31e-04	-0.21
35	17	3551	2.87	0.26	2.86	0.27	0.17	0.16	-0.14	1.81e-02	1.41e-03	-0.15
35	17	3552	1.36e-02	-1.24	-1.22	-3.34e-03	0.14	0.23	-0.21	2.20e-02	5.21e-04	-0.22
35	17	3553	0.21	-0.92	-0.74	3.19e-02	0.41	0.19	-0.17	1.52e-02	1.31e-03	-0.18
35	17	3554	0.31	-1.35	-0.49	-0.56	0.83	0.27	-0.26	-3.85e-02	5.53e-02	-0.26
35	17	3555	0.61	-1.57	-1.03	6.14e-02	0.94	2.91e-02	-7.34e-03	1.42e-02	7.49e-03	-1.79e-02
35	17	3556	2.73	0.33	2.50	0.56	0.71	0.27	-0.26	5.60e-02	-4.74e-02	-0.26
35	17	3557	2.53	0.26	2.50	0.29	0.26	0.20	-0.16	3.22e-02	8.48e-03	-0.18
35	17	3558	2.63	0.28	2.62	0.29	-0.12	0.23	-0.23	-1.28e-03	3.15e-03	-0.23
35	17	3559	2.67	0.21	2.62	0.26	-0.35	0.18	-0.15	2.04e-02	4.88e-03	-0.16
35	17	3560	2.83	7.62e-03	2.77	6.25e-02	-0.39	0.24	-0.22	9.84e-03	1.77e-03	-0.23
35	17	3561	2.84	-1.62e-02	2.79	3.84e-02	-0.39	0.17	-0.16	1.43e-02	1.80e-03	-0.17
35	17	3562	0.18	-0.95	-0.79	2.72e-02	-0.38	0.23	-0.23	5.12e-03	-3.41e-04	-0.23
35	17	3563	4.83e-02	-0.78	-0.76	2.15e-02	-0.15	0.17	-0.16	7.02e-03	-1.23e-03	-0.17
35	17	3564	-7.34e-03	-0.95	-0.94	-1.48e-02	-8.35e-02	0.24	-0.23	1.82e-02	-7.70e-04	-0.23
35	17	3565	-0.30	-0.91	-0.90	-0.30	4.30e-02	0.19	-0.19	8.60e-04	-2.37e-03	-0.19
35	17	3566	0.11	-0.94	-0.28	-0.55	0.51	0.29	-0.27	-4.26e-02	5.39e-02	-0.28
35	17	3567	0.45	-1.39	-0.83	-0.12	0.85	2.96e-02	-2.09e-02	6.21e-03	2.42e-03	-2.52e-02
35	17	3568	1.49	7.32e-02	1.02	0.55	0.67	0.28	-0.28	5.09e-02	-5.13e-02	-0.27
35	17	3569	1.36	0.15	1.36	0.15	7.03e-03	0.20	-0.18	1.77e-02	5.64e-03	-0.19
35	17	3570	1.38	8.09e-02	1.31	0.15	-0.30	0.24	-0.24	-8.57e-03	2.07e-03	-0.24
35	17	3571	1.14	-7.83e-02	1.03	2.75e-02	-0.34	0.17	-0.16	7.67e-03	3.20e-03	-0.17
35	17	3572	0.48	-0.27	0.17	3.74e-02	-0.37	0.24	-0.24	3.51e-03	1.64e-03	-0.24
35	17	3573	0.38	-0.35	1.85e-02	1.15e-02	-0.37	0.17	-0.17	6.82e-04	1.87e-04	-0.17
35	17	3574	0.29	-0.45	-0.13	-2.57e-02	-0.36	0.24	-0.24	-2.10e-03	-1.44e-03	-0.24
35	17	3575	0.22	-0.50	-0.28	-3.31e-03	-0.33	0.17	-0.17	-1.38e-03	-1.99e-03	-0.17

35	17	3576	-1.08e-02	-0.70	-0.56	-0.15	-0.28	0.24	-0.24	1.03e-03	-4.09e-03	-0.24
35	17	3577	-0.18	-1.27	-1.27	-0.18	2.07e-02	0.18	-0.21	-2.13e-02	-6.26e-03	-0.19
35	17	3578	-9.93e-02	-1.53	-1.08	-0.55	0.67	0.28	-0.27	-4.24e-02	5.39e-02	-0.27
35	17	3579	1.25	-0.51	0.65	8.65e-02	0.83	1.88e-02	-3.28e-02	-1.05e-02	-3.46e-03	-2.56e-02
35	17	3580	0.90	-0.12	0.24	0.54	0.49	0.27	-0.29	3.88e-02	-5.59e-02	-0.28
35	17	3581	0.85	0.21	0.85	0.21	3.37e-02	0.19	-0.19	2.29e-03	2.59e-03	-0.19
35	17	3582	0.90	-3.31e-02	0.86	6.28e-03	-0.19	0.23	-0.24	-1.77e-02	7.30e-04	-0.24
35	17	3583	0.79	-9.51e-02	0.71	-2.07e-02	-0.25	0.16	-0.17	-7.18e-03	9.77e-04	-0.16
35	17	3584	0.89	-0.19	0.73	-3.21e-02	-0.38	0.23	-0.24	-5.52e-03	6.66e-05	-0.23
35	17	3585	1.94e-02	-2.78	-2.72	-3.63e-02	-0.39	0.16	-0.17	-1.43e-02	-2.10e-03	-0.17
35	17	3586	-5.85e-03	-2.77	-2.71	-6.30e-02	-0.39	0.22	-0.24	-9.98e-03	-2.09e-03	-0.23
35	17	3587	-0.20	-2.63	-2.57	-0.25	-0.36	0.15	-0.17	-2.04e-02	-5.24e-03	-0.16
35	17	3588	-0.28	-2.58	-2.57	-0.28	-0.13	0.23	-0.23	8.99e-04	-3.58e-03	-0.23
35	17	3589	-0.25	-2.47	-2.44	-0.27	0.23	0.16	-0.20	-3.39e-02	-9.04e-03	-0.18
35	17	3590	-0.34	-2.67	-2.45	-0.55	0.67	0.26	-0.27	-5.52e-02	4.84e-02	-0.26
35	17	3591	1.54	-0.58	1.02	-6.10e-02	0.91	8.17e-03	-2.94e-02	-1.38e-02	-7.48e-03	-1.85e-02
35	17	3592	1.31	-0.30	0.46	0.54	0.80	0.26	-0.28	3.77e-02	-5.67e-02	-0.26
35	17	3593	0.84	-0.19	0.68	-3.11e-02	0.37	0.17	-0.19	-1.45e-02	-1.76e-03	-0.18
35	17	3594	1.17	-1.19e-02	1.16	-2.83e-03	0.10	0.21	-0.23	-2.21e-02	-9.71e-04	-0.22
35	17	3595	-0.26	-2.84	-2.83	-0.26	0.11	0.14	-0.16	-1.84e-02	-1.54e-03	-0.15
35	17	3596	-0.25	-2.43	-2.41	-0.27	0.20	0.21	-0.22	-9.67e-03	-6.73e-04	-0.21
35	17	3597	-5.64e-02	-1.75	-1.55	-0.26	0.55	0.13	-0.17	-3.39e-02	-5.12e-03	-0.15
35	17	3598	0.13	-2.29	-1.90	-0.26	0.89	0.21	-0.21	-5.32e-03	-1.77e-03	-0.21
35	17	3599	0.21	-2.29	-1.64	-0.43	1.10	0.11	-0.24	-0.12	-1.74e-02	-0.17
35	17	3600	0.43	-2.65	-1.74	-0.48	1.41	0.13	-0.38	-0.27	1.76e-02	-0.22
35	17	3601	0.36	-3.28	-2.14	-0.79	1.69	-0.31	-2.00	-2.00	-0.31	7.88e-02
35	17	3602	3.43	-3.24	0.61	-0.42	3.30	1.42	0.28	1.42	0.28	-5.45e-03
35	17	3603	3.55	-3.22	-0.29	0.63	3.35	0.31	-0.17	0.15	-1.21e-02	-0.23
35	17	3604	4.02	-3.44	0.18	0.39	3.73	0.17	-4.26e-02	0.12	1.66e-02	-9.67e-02
35	17	3605	4.99	-2.79	1.73	0.47	3.84	0.26	-0.25	1.47e-02	5.02e-03	-0.25
35	17	3606	4.69	-2.54	1.79	0.36	3.54	0.12	-8.01e-02	2.82e-02	7.78e-03	-9.75e-02
35	17	3607	4.60	-2.14	2.06	0.39	3.27	0.27	-0.26	8.76e-03	3.66e-03	-0.26
35	17	3608	4.44	-2.01	2.04	0.38	3.12	0.11	-8.68e-02	2.02e-02	6.27e-03	-9.98e-02
35	17	3609	4.35	-2.04	2.22	8.75e-02	3.01	0.27	-0.26	6.40e-03	4.37e-04	-0.26
35	17	3610	4.52	-1.96	2.50	5.60e-02	3.00	0.11	-0.11	1.78e-05	7.45e-03	-0.11
35	17	3611	3.92	-2.23	2.15	-0.45	2.79	0.30	-0.24	2.01e-02	3.67e-02	-0.27
35	17	3612	3.74	-1.48	1.90	0.36	2.50	9.67e-02	-7.38e-02	1.53e-02	7.59e-03	-8.52e-02
35	17	3613	4.17	-1.14	2.25	0.78	2.55	0.26	-0.29	-2.83e-03	-2.66e-02	-0.27
35	17	3614	4.34	-1.25	2.63	0.46	2.58	0.13	-9.31e-02	3.76e-02	3.89e-03	-0.11
35	17	3615	4.07	-1.29	2.38	0.40	2.49	0.28	-0.27	1.14e-02	6.05e-03	-0.28
35	17	3616	3.96	-1.26	2.34	0.36	2.41	0.12	-9.91e-02	1.46e-02	3.98e-03	-0.11
35	17	3617	3.94	-1.22	2.36	0.36	2.38	0.29	-0.28	8.19e-03	2.34e-03	-0.28
35	17	3618	3.75	-1.44	2.21	0.10	2.37	0.12	-0.10	1.26e-02	3.45e-03	-0.11
35	17	3619	3.80	-1.43	2.25	0.12	2.38	0.29	-0.28	6.19e-03	2.15e-03	-0.28
35	17	3620	3.70	-1.57	2.09	4.22e-02	2.42	0.12	-0.10	9.95e-03	2.76e-03	-0.11
35	17	3621	3.66	-1.71	2.04	-9.14e-02	2.46	0.28	-0.28	3.40e-03	-1.52e-03	-0.28
35	17	3622	3.78	-1.76	2.21	-0.19	2.49	0.12	-0.12	-1.13e-02	3.64e-03	-0.12
35	17	3623	3.13	-2.16	1.62	-0.65	2.39	0.31	-0.26	1.63e-02	3.38e-02	-0.29
35	17	3624	2.88	-1.65	1.07	0.16	2.22	9.86e-02	-8.98e-02	6.24e-03	2.52e-03	-9.42e-02
35	17	3625	2.60	-2.16	-0.25	0.69	2.33	0.27	-0.31	-8.03e-03	-3.04e-02	-0.29
35	17	3626	2.66	-2.22	0.14	0.31	2.44	0.13	-0.11	2.58e-02	1.37e-04	-0.12
35	17	3627	2.81	-2.09	0.47	0.25	2.45	0.29	-0.28	5.55e-03	4.06e-03	-0.29
35	17	3628	2.69	-2.18	0.38	0.13	2.44	0.12	-0.11	3.39e-03	7.99e-04	-0.11
35	17	3629	2.59	-2.27	0.26	6.49e-02	2.43	0.29	-0.29	1.13e-03	3.46e-04	-0.29
35	17	3630	2.47	-2.38	5.86e-02	2.37e-02	2.42	0.12	-0.12	2.12e-03	5.20e-04	-0.12
35	17	3631	2.34	-2.51	-0.13	-4.39e-02	2.42	0.29	-0.29	-3.16e-03	-1.12e-03	-0.29
35	17	3632	2.21	-2.64	-0.33	-9.80e-02	2.42	0.12	-0.12	1.99e-03	5.32e-04	-0.12
35	17	3633	2.06	-2.79	-0.49	-0.25	2.42	0.28	-0.30	-8.75e-03	-4.86e-03	-0.29
35	17	3634	2.06	-2.76	-0.30	-0.39	2.41	0.10	-0.13	-3.03e-02	-9.86e-04	-0.12
35	17	3635	1.96	-2.69	-2.84e-02	-0.70	2.30	0.31	-0.27	1.51e-02	3.30e-02	-0.29
35	17	3636	1.61	-2.89	-1.12	-0.16	2.20	8.82e-02	-0.10	-1.15e-02	-3.79e-03	-9.58e-02
35	17	3637	2.11	-3.15	-1.68	0.64	2.36	0.26	-0.31	-1.52e-02	-3.44e-02	-0.29
35	17	3638	1.71	-3.80	-2.28	0.18	2.46	0.12	-0.11	1.28e-02	-2.85e-03	-0.12
35	17	3639	1.68	-3.62	-2.02	8.65e-02	2.43	0.28	-0.29	-3.09e-03	2.25e-03	-0.29
35	17	3640	1.54	-3.69	-2.11	-4.45e-02	2.40	0.10	-0.12	-9.97e-03	-2.25e-03	-0.11
35	17	3641	1.41	-3.78	-2.24	-0.13	2.37	0.28	-0.29	-6.37e-03	-1.65e-03	-0.28
35	17	3642	1.42	-3.75	-2.22	-0.11	2.36	0.10	-0.12	-1.24e-02	-2.99e-03	-0.11
35	17	3643	1.20	-3.93	-2.36	-0.37	2.36	0.28	-0.29	-8.21e-03	-1.89e-03	-0.28
35	17	3644	1.22	-3.94	-2.35	-0.37	2.39	9.73e-02	-0.12	-1.44e-02	-3.63e-03	-0.11
35	17	3645	1.25	-4.03	-2.37	-0.41	2.45	0.27	-0.29	-1.14e-02	-5.73e-03	-0.28
35	17	3646	1.20	-4.31	-2.64	-0.46	2.53	9.04e-02	-0.13	-3.75e-02	-3.61e-03	-0.11
35	17	3647	1.10	-4.13	-2.26	-0.78	2.51	0.29	-0.26	-9.24e-04	2.68e-02	-0.27
35	17	3648	1.48	-3.69	-1.85	-0.36	2.48	7.55e-02	-9.80e-02	-1.49e-02	-7.56e-03	-8.67e-02
35	17	3649	2.20	-3.92	-2.16	0.43	2.77	0.25	-0.30	-1.66e-02	-3.64e-02	-0.27
35	17	3650	1.92	-4.49	-2.52	-5.33e-02	2.96	0.10	-0.11	-3.05e-04	-6.70e-03	-0.11
35	17	3651	1.99	-4.29	-2.21	-9.09e-02	2.96	0.26	-0.27	-6.70e-03	5.50e-04	-0.27
35	17	3652	2.11	-4.29	-2.07	-0.11	3.05	8.41e-02	-0.11	-2.03e-02	-6.46e-03	-9.72e-02
35	17	3653	2.06	-4.52	-2.08	-0.38	3.18	0.26	-0.27	-9.12e-03	-3.94e-03	-0.26
35	17	3654	2.42	-4.61	-1.83	-0.36	3.44	7.71e-02	-0.11	-2.86e-02	-7.99e-03	-9.49e-02

35	17	3655	2.68	-4.89	-1.74	-0.48	3.73	0.25	-0.27	-1.42e-02	-4.69e-03	-0.26
35	17	3656	3.41	-3.90	-9.35e-02	-0.40	3.65	4.09e-02	-0.17	-0.11	-1.57e-02	-9.35e-02
35	17	3657	3.25	-3.49	0.41	-0.64	3.33	0.17	-0.31	-0.15	1.18e-02	-0.23
35	17	3658	3.29	-3.37	-0.53	0.45	3.29	-0.28	-1.43	-1.43	-0.28	-6.24e-03
35	17	3659	5.41	-4.11	0.71	0.58	4.76	0.84	0.12	0.84	0.12	-5.43e-03
35	17	3660	5.15	-4.28	0.67	0.20	4.71	0.26	-0.17	9.49e-02	-6.75e-03	-0.21
35	17	3661	5.84	-4.59	0.84	0.41	5.21	0.12	-3.92e-02	7.69e-02	6.96e-03	-7.33e-02
35	17	3662	6.45	-4.79	1.16	0.50	5.61	0.27	-0.25	1.41e-02	6.36e-04	-0.26
35	17	3663	6.50	-4.55	1.57	0.37	5.49	9.85e-02	-7.33e-02	2.08e-02	4.39e-03	-8.55e-02
35	17	3664	6.50	-4.25	1.88	0.37	5.32	0.28	-0.27	8.35e-03	2.72e-03	-0.27
35	17	3665	6.46	-4.04	2.13	0.28	5.16	9.95e-02	-7.80e-02	1.63e-02	5.20e-03	-8.86e-02
35	17	3666	6.40	-3.79	2.37	0.24	4.98	0.28	-0.27	4.76e-03	1.83e-03	-0.28
35	17	3667	6.30	-3.50	2.59	0.22	4.76	9.47e-02	-8.22e-02	8.24e-03	4.27e-03	-8.84e-02
35	17	3668	6.01	-3.16	2.58	0.26	4.43	0.28	-0.27	6.35e-03	4.73e-03	-0.28
35	17	3669	5.94	-2.81	2.78	0.35	4.20	0.10	-8.86e-02	1.21e-02	3.02e-03	-9.60e-02
35	17	3670	6.18	-2.62	2.93	0.63	4.25	0.29	-0.28	9.33e-03	-7.87e-04	-0.28
35	17	3671	6.21	-2.78	2.81	0.62	4.36	0.10	-8.06e-02	2.12e-02	2.38e-03	-9.19e-02
35	17	3672	6.22	-2.88	2.83	0.50	4.40	0.29	-0.28	1.10e-02	1.80e-03	-0.29
35	17	3673	6.11	-2.89	2.82	0.40	4.33	0.10	-8.93e-02	1.20e-02	1.88e-03	-9.62e-02
35	17	3674	5.95	-2.90	2.72	0.33	4.26	0.29	-0.29	6.98e-03	8.79e-04	-0.29
35	17	3675	5.80	-2.97	2.57	0.26	4.23	0.10	-9.15e-02	1.03e-02	2.36e-03	-9.77e-02
35	17	3676	5.67	-3.04	2.40	0.24	4.22	0.30	-0.29	6.46e-03	2.03e-03	-0.29
35	17	3677	5.57	-3.18	2.23	0.16	4.25	0.10	-9.34e-02	8.38e-03	2.75e-03	-9.89e-02
35	17	3678	5.46	-3.31	2.10	6.15e-02	4.27	0.30	-0.29	2.22e-03	6.74e-04	-0.30
35	17	3679	5.27	-3.32	1.96	-1.35e-02	4.18	9.85e-02	-9.70e-02	-4.15e-04	1.84e-03	-9.77e-02
35	17	3680	4.84	-3.42	1.64	-0.22	4.02	0.30	-0.29	2.74e-03	3.26e-03	-0.30
35	17	3681	4.80	-3.11	1.54	0.15	3.90	0.11	-0.10	4.92e-03	8.61e-04	-0.10
35	17	3682	4.98	-3.10	1.42	0.46	4.01	0.30	-0.30	4.80e-03	-2.15e-03	-0.30
35	17	3683	4.91	-3.43	1.05	0.43	4.16	0.11	-9.36e-02	1.17e-02	8.34e-05	-9.93e-02
35	17	3684	4.83	-3.67	0.86	0.30	4.24	0.30	-0.30	5.72e-03	6.87e-04	-0.30
35	17	3685	4.65	-3.79	0.66	0.20	4.21	0.10	-0.10	3.39e-03	-1.59e-04	-0.10
35	17	3686	4.39	-3.97	0.35	5.82e-02	4.18	0.30	-0.30	-1.13e-03	-1.22e-03	-0.30
35	17	3687	4.18	-4.15	2.67e-02	2.44e-03	4.17	0.10	-0.10	2.48e-03	8.34e-04	-0.10
35	17	3688	4.02	-4.32	-0.26	-4.55e-02	4.16	0.30	-0.30	-1.58e-03	5.69e-04	-0.30
35	17	3689	3.79	-4.59	-0.63	-0.18	4.18	0.10	-0.10	-3.67e-04	1.17e-03	-0.10
35	17	3690	3.60	-4.81	-0.93	-0.28	4.19	0.30	-0.30	-3.76e-03	1.17e-03	-0.30
35	17	3691	3.33	-4.95	-1.17	-0.45	4.12	8.87e-02	-0.10	-1.54e-02	-9.16e-04	-9.66e-02
35	17	3692	2.99	-5.08	-1.62	-0.47	3.99	0.30	-0.30	-3.61e-03	1.46e-03	-0.30
35	17	3693	3.01	-4.96	-1.78	-0.17	3.90	0.10	-0.11	-9.15e-03	-1.41e-03	-0.11
35	17	3694	3.23	-5.15	-1.99	6.28e-02	4.06	0.30	-0.29	3.67e-03	4.80e-04	-0.30
35	17	3695	3.25	-5.49	-2.18	-5.93e-02	4.24	9.32e-02	-9.44e-02	3.33e-05	-1.27e-03	-9.38e-02
35	17	3696	3.34	-5.61	-2.22	-5.28e-02	4.34	0.30	-0.30	-3.07e-03	-1.08e-03	-0.30
35	17	3697	3.21	-5.72	-2.31	-0.20	4.34	9.06e-02	-0.10	-8.29e-03	-2.66e-03	-9.60e-02
35	17	3698	3.11	-5.79	-2.43	-0.26	4.32	0.29	-0.30	-6.83e-03	-2.40e-03	-0.30
35	17	3699	3.03	-5.93	-2.59	-0.31	4.34	8.85e-02	-0.10	-1.02e-02	-2.35e-03	-9.47e-02
35	17	3700	3.01	-6.04	-2.70	-0.33	4.37	0.29	-0.30	-7.23e-03	-1.35e-03	-0.29
35	17	3701	2.97	-6.21	-2.79	-0.46	4.44	8.64e-02	-0.10	-1.20e-02	-1.99e-03	-9.32e-02
35	17	3702	3.02	-6.27	-2.75	-0.50	4.50	0.28	-0.30	-1.06e-02	-2.21e-03	-0.29
35	17	3703	2.88	-6.27	-2.71	-0.68	4.46	7.74e-02	-0.10	-1.98e-02	-2.77e-03	-8.83e-02
35	17	3704	2.79	-6.15	-2.73	-0.62	4.34	0.27	-0.29	-1.78e-02	-3.83e-03	-0.28
35	17	3705	2.90	-6.02	-2.78	-0.35	4.29	8.95e-02	-0.10	-1.20e-02	-3.19e-03	-9.70e-02
35	17	3706	3.19	-6.21	-2.76	-0.27	4.53	0.28	-0.28	2.06e-03	-8.54e-04	-0.28
35	17	3707	3.52	-6.52	-2.70	-0.31	4.87	7.71e-02	-9.22e-02	-1.08e-02	-4.35e-03	-8.46e-02
35	17	3708	3.87	-6.54	-2.42	-0.25	5.09	0.28	-0.28	-4.54e-03	-1.78e-03	-0.28
35	17	3709	4.11	-6.56	-2.18	-0.27	5.24	7.77e-02	-9.95e-02	-1.68e-02	-5.02e-03	-8.84e-02
35	17	3710	4.33	-6.55	-1.88	-0.35	5.39	0.27	-0.28	-7.99e-03	-2.21e-03	-0.27
35	17	3711	4.62	-6.52	-1.55	-0.36	5.54	7.25e-02	-9.76e-02	-2.11e-02	-4.04e-03	-8.46e-02
35	17	3712	4.85	-6.46	-1.09	-0.52	5.64	0.26	-0.27	-1.36e-02	-4.43e-05	-0.26
35	17	3713	4.65	-5.88	-0.80	-0.43	5.27	4.03e-02	-0.12	-7.32e-02	-5.90e-03	-7.24e-02
35	17	3714	4.41	-5.19	-0.57	-0.22	4.80	0.17	-0.27	-0.10	2.84e-03	-0.21
35	17	3715	4.30	-5.41	-0.60	-0.50	4.86	-0.12	-0.84	-0.84	-0.12	-5.14e-03
35	17	3716	4.44	-4.86	0.27	-0.69	4.62	0.34	8.38e-02	0.34	8.39e-02	4.24e-03
35	17	3717	4.81	-4.27	0.70	-0.17	4.52	0.22	-0.16	4.52e-02	7.20e-03	-0.19
35	17	3718	5.89	-4.02	1.44	0.43	4.93	9.43e-02	-5.76e-02	3.51e-02	1.68e-03	-7.41e-02
35	17	3719	6.73	-4.20	2.16	0.37	5.39	0.25	-0.25	4.69e-03	-4.51e-03	-0.25
35	17	3720	7.21	-3.86	2.82	0.53	5.41	9.79e-02	-8.66e-02	1.29e-02	-1.55e-03	-9.20e-02
35	17	3721	7.44	-3.74	3.35	0.35	5.39	0.26	-0.26	5.84e-03	-2.71e-03	-0.26
35	17	3722	7.73	-3.37	3.84	0.52	5.30	0.10	-9.19e-02	1.04e-02	-1.38e-03	-9.62e-02
35	17	3723	7.74	-3.30	4.16	0.28	5.17	0.27	-0.26	6.11e-03	-1.68e-03	-0.26
35	17	3724	7.86	-2.92	4.47	0.46	5.00	0.10	-9.40e-02	8.35e-03	-1.09e-03	-9.75e-02
35	17	3725	7.80	-2.86	4.63	0.31	4.88	0.27	-0.27	4.93e-03	-5.02e-03	-0.27
35	17	3726	7.93	-2.56	4.78	0.60	4.81	0.10	-9.36e-02	9.30e-03	-1.58e-03	-9.73e-02
35	17	3727	7.87	-2.68	4.77	0.42	4.81	0.28	-0.27	8.69e-03	4.63e-04	-0.27
35	17	3728	8.04	-2.49	4.83	0.72	4.85	0.11	-9.51e-02	1.31e-02	-1.34e-03	-0.10
35	17	3729	7.96	-2.77	4.73	0.47	4.92	0.28	-0.27	7.49e-03	-2.49e-03	-0.27
35	17	3730	7.99	-2.71	4.68	0.60	4.95	0.11	-9.92e-02	9.92e-03	-9.08e-04	-0.10
35	17	3731	7.79	-2.94	4.50	0.35	4.94	0.28	-0.28	6.39e-03	-1.44e-03	-0.28
35	17	3732	7.74	-2.91	4.35	0.48	4.96	0.11	-0.10	7.87e-03	-6.93e-04	-0.10
35	17	3733	7.49	-3.15	4.08	0.26	4.97	0.28	-0.28	5.74e-03	-7.99e-04	-0.28

35	17	3734	7.40	-3.17	3.87	0.36	4.99	0.11	-0.10	5.80e-03	-5.04e-04	-0.11
35	17	3735	7.12	-3.40	3.56	0.16	4.98	0.28	-0.28	4.36e-03	1.97e-05	-0.28
35	17	3736	6.89	-3.40	3.27	0.22	4.91	0.11	-0.11	2.65e-03	-2.19e-04	-0.11
35	17	3737	6.58	-3.57	2.91	0.11	4.88	0.29	-0.29	2.05e-03	-3.32e-03	-0.29
35	17	3738	6.41	-3.58	2.55	0.28	4.86	0.11	-0.10	3.95e-03	-4.85e-04	-0.11
35	17	3739	6.16	-3.82	2.12	0.21	4.90	0.29	-0.28	4.78e-03	2.05e-03	-0.29
35	17	3740	6.05	-3.96	1.75	0.34	4.95	0.11	-0.10	6.06e-03	-5.65e-04	-0.11
35	17	3741	5.85	-4.29	1.33	0.23	5.04	0.29	-0.29	2.64e-03	-1.17e-03	-0.29
35	17	3742	5.63	-4.51	0.94	0.18	5.06	0.11	-0.11	3.53e-03	-2.79e-05	-0.11
35	17	3743	5.36	-4.75	0.53	7.57e-02	5.05	0.29	-0.29	-8.71e-04	-7.73e-04	-0.29
35	17	3744	5.09	-5.01	5.33e-02	1.78e-02	5.05	0.11	-0.11	1.59e-03	2.37e-04	-0.11
35	17	3745	4.80	-5.27	-0.43	-4.43e-02	5.03	0.29	-0.29	-2.91e-04	3.20e-04	-0.29
35	17	3746	4.51	-5.57	-0.91	-0.16	5.03	0.11	-0.11	-2.45e-03	4.16e-05	-0.11
35	17	3747	4.24	-5.84	-1.38	-0.22	5.01	0.29	-0.29	-8.74e-05	2.33e-03	-0.29
35	17	3748	3.92	-6.09	-1.81	-0.35	4.95	0.10	-0.11	-8.08e-03	2.49e-04	-0.11
35	17	3749	3.80	-6.25	-2.21	-0.24	4.92	0.28	-0.29	-6.01e-03	-3.04e-03	-0.29
35	17	3750	3.59	-6.56	-2.70	-0.27	4.93	0.10	-0.11	-8.38e-03	1.21e-04	-0.10
35	17	3751	3.60	-6.81	-3.08	-0.14	4.99	0.29	-0.27	1.02e-02	8.29e-03	-0.28
35	17	3752	3.52	-7.15	-3.43	-0.20	5.08	0.11	-0.11	-6.81e-03	-4.35e-04	-0.11
35	17	3753	3.62	-7.35	-3.65	-7.64e-02	5.18	0.28	-0.28	-4.68e-03	-4.29e-04	-0.28
35	17	3754	3.36	-7.66	-3.93	-0.36	5.21	0.11	-0.11	-5.96e-03	2.82e-04	-0.11
35	17	3755	3.39	-7.73	-4.11	-0.24	5.21	0.27	-0.28	-5.97e-03	4.51e-04	-0.28
35	17	3756	3.14	-7.98	-4.35	-0.48	5.21	0.11	-0.11	-7.85e-03	4.89e-04	-0.11
35	17	3757	3.20	-8.00	-4.48	-0.32	5.20	0.27	-0.28	-6.62e-03	1.07e-03	-0.27
35	17	3758	2.96	-8.20	-4.64	-0.60	5.20	0.10	-0.11	-9.79e-03	7.16e-04	-0.11
35	17	3759	3.04	-8.13	-4.66	-0.43	5.17	0.27	-0.27	-7.37e-03	2.22e-03	-0.27
35	17	3760	2.72	-8.19	-4.74	-0.74	5.07	0.10	-0.11	-9.57e-03	1.52e-03	-0.11
35	17	3761	2.93	-8.01	-4.70	-0.37	5.02	0.26	-0.28	-2.16e-02	-5.40e-03	-0.27
35	17	3762	2.73	-8.12	-4.78	-0.61	5.01	9.28e-02	-9.88e-02	-7.87e-03	1.88e-03	-9.57e-02
35	17	3763	3.04	-8.03	-4.68	-0.30	5.09	0.28	-0.26	7.18e-03	9.34e-03	-0.27
35	17	3764	3.11	-8.19	-4.58	-0.50	5.27	9.62e-02	-0.11	-1.18e-02	2.41e-05	-0.10
35	17	3765	3.60	-8.08	-4.32	-0.17	5.46	0.25	-0.27	-1.30e-02	-1.23e-03	-0.26
35	17	3766	3.61	-8.02	-3.89	-0.51	5.56	9.60e-02	-0.10	-6.88e-03	2.25e-03	-9.82e-02
35	17	3767	4.02	-7.70	-3.35	-0.33	5.66	0.25	-0.26	-6.17e-03	2.99e-03	-0.26
35	17	3768	4.12	-7.43	-2.79	-0.51	5.66	8.90e-02	-9.98e-02	-1.26e-02	1.82e-03	-9.41e-02
35	17	3769	4.45	-6.91	-2.09	-0.36	5.62	0.25	-0.24	-4.48e-03	4.68e-03	-0.24
35	17	3770	4.27	-6.08	-1.34	-0.47	5.15	6.12e-02	-9.63e-02	-3.36e-02	-1.53e-03	-7.71e-02
35	17	3771	4.51	-4.99	-0.61	0.13	4.74	0.16	-0.22	-5.06e-02	-8.90e-03	-0.19
35	17	3772	5.01	-4.70	-0.32	0.63	4.83	-8.43e-02	-0.34	-0.34	-8.44e-02	4.55e-03
35	17	3773	3.50	-4.65	-0.30	-0.85	4.07	6.83e-02	-0.10	-9.88e-02	6.35e-02	-2.83e-02
35	17	3774	4.57	-3.59	1.19	-0.21	4.02	0.21	-0.19	7.81e-05	1.90e-02	-0.20
35	17	3775	6.14	-2.99	2.59	0.55	4.45	8.07e-02	-8.52e-02	-3.99e-03	-5.23e-04	-8.29e-02
35	17	3776	7.18	-3.19	3.59	0.39	4.93	0.24	-0.24	1.51e-03	-3.39e-03	-0.24
35	17	3777	8.05	-2.67	4.59	0.79	5.01	9.15e-02	-9.36e-02	3.20e-03	-5.28e-03	-9.25e-02
35	17	3778	8.49	-2.69	5.28	0.51	5.05	0.25	-0.25	4.03e-03	-4.22e-03	-0.25
35	17	3779	9.05	-2.19	5.97	0.88	5.01	9.52e-02	-9.68e-02	3.33e-03	-4.93e-03	-9.59e-02
35	17	3780	9.18	-2.32	6.37	0.49	4.94	0.26	-0.25	4.39e-03	-3.36e-03	-0.25
35	17	3781	9.53	-1.81	6.81	0.91	4.85	8.89e-02	-0.11	3.95e-03	-2.33e-02	-9.76e-02
35	17	3782	9.48	-2.05	6.94	0.49	4.77	0.25	-0.27	4.20e-03	-2.32e-02	-0.26
35	17	3783	9.71	-1.60	7.14	0.97	4.74	8.76e-02	-0.11	1.25e-03	-2.36e-02	-9.80e-02
35	17	3784	9.62	-1.92	7.09	0.61	4.78	0.25	-0.27	3.13e-03	-2.42e-02	-0.26
35	17	3785	9.79	-1.66	7.13	1.00	4.84	0.17	-7.57e-02	0.12	-2.47e-02	-0.10
35	17	3786	9.64	-2.07	6.96	0.61	4.92	0.33	-0.23	0.13	-2.55e-02	-0.27
35	17	3787	9.70	-1.89	6.89	0.93	4.97	0.18	-7.72e-02	0.13	-2.58e-02	-0.10
35	17	3788	9.41	-2.30	6.60	0.51	5.00	0.25	-0.28	-2.65e-03	-2.62e-02	-0.27
35	17	3789	9.37	-2.15	6.40	0.82	5.04	9.19e-02	-0.12	2.68e-04	-2.67e-02	-0.10
35	17	3790	8.98	-2.59	6.00	0.39	5.06	0.27	-0.27	-2.07e-03	1.12e-03	-0.27
35	17	3791	8.87	-2.47	5.70	0.70	5.09	0.11	-0.10	9.37e-04	1.53e-03	-0.11
35	17	3792	8.40	-2.91	5.22	0.28	5.09	0.27	-0.27	-1.84e-03	4.10e-04	-0.27
35	17	3793	8.17	-2.80	4.82	0.55	5.05	0.11	-0.11	-8.62e-04	1.55e-03	-0.11
35	17	3794	7.65	-3.19	4.24	0.22	5.03	0.28	-0.28	-1.68e-03	-7.04e-04	-0.28
35	17	3795	7.37	-3.20	3.71	0.46	5.03	0.11	-0.10	4.47e-04	7.70e-04	-0.11
35	17	3796	6.94	-3.58	3.07	0.29	5.07	0.28	-0.28	-7.63e-04	1.46e-03	-0.28
35	17	3797	6.67	-3.81	2.49	0.37	5.13	0.11	-0.11	1.51e-03	5.03e-04	-0.11
35	17	3798	6.32	-4.20	1.89	0.23	5.20	0.28	-0.28	-6.66e-04	8.76e-04	-0.28
35	17	3799	6.00	-4.51	1.30	0.20	5.22	0.11	-0.11	-7.15e-04	6.68e-04	-0.11
35	17	3800	5.60	-4.87	0.66	7.15e-02	5.22	0.28	-0.28	-3.50e-04	-1.45e-04	-0.28
35	17	3801	5.25	-5.20	3.71e-02	1.20e-02	5.23	0.11	-0.11	-5.57e-04	4.42e-04	-0.11
35	17	3802	4.90	-5.52	-0.59	-3.93e-02	5.20	0.28	-0.28	3.58e-04	7.02e-04	-0.28
35	17	3803	4.52	-5.94	-1.23	-0.18	5.20	0.11	-0.11	2.21e-04	7.83e-05	-0.11
35	17	3804	4.22	-6.26	-1.83	-0.21	5.18	0.28	-0.28	5.16e-04	-1.81e-04	-0.28
35	17	3805	3.84	-6.66	-2.46	-0.36	5.15	0.11	-0.11	-1.36e-03	-8.07e-04	-0.11
35	17	3806	3.61	-6.99	-3.06	-0.32	5.12	0.28	-0.28	1.71e-03	-1.83e-03	-0.28
35	17	3807	3.31	-7.43	-3.70	-0.43	5.12	0.10	-0.11	-3.29e-03	-1.55e-03	-0.11
35	17	3808	3.22	-7.88	-4.39	-0.28	5.16	0.28	-0.27	7.90e-03	2.02e-03	-0.27
35	17	3809	3.04	-8.29	-4.83	-0.42	5.22	0.12	-0.12	-2.58e-03	-2.40e-03	-0.12
35	17	3810	3.08	-8.59	-5.25	-0.27	5.28	0.26	-0.26	2.57e-03	-7.16e-04	-0.26
35	17	3811	2.74	-9.04	-5.70	-0.59	5.31	0.13	-0.11	-1.27e-03	2.19e-02	-0.12
35	17	3812	2.82	-9.19	-6.00	-0.37	5.30	0.27	-0.25	1.68e-03	2.13e-02	-0.26

35	17	3813	2.46	-9.55	-6.37	-0.71	5.29	0.13	-0.11	-1.98e-04	2.11e-02	-0.12
35	17	3814	2.55	-9.61	-6.58	-0.48	5.25	0.27	-0.25	1.95e-03	2.06e-02	-0.26
35	17	3815	2.20	-9.87	-6.85	-0.82	5.22	9.06e-02	-0.17	-0.10	2.07e-02	-0.12
35	17	3816	2.31	-9.81	-6.94	-0.57	5.16	0.22	-0.30	-0.10	2.06e-02	-0.26
35	17	3817	1.91	-9.95	-7.11	-0.92	5.06	8.84e-02	-0.17	-0.10	2.09e-02	-0.11
35	17	3818	2.22	-9.67	-6.93	-0.52	5.00	0.27	-0.25	1.52e-03	2.19e-02	-0.26
35	17	3819	1.80	-9.88	-7.11	-0.98	4.97	0.11	-8.82e-02	-1.40e-03	2.18e-02	-9.77e-02
35	17	3820	2.18	-9.79	-7.09	-0.52	5.00	0.26	-0.25	-7.18e-03	2.09e-02	-0.26
35	17	3821	2.11	-9.78	-6.86	-0.82	5.12	0.12	-0.10	-3.84e-03	2.14e-02	-0.11
35	17	3822	2.75	-9.34	-6.25	-0.34	5.27	0.26	-0.24	1.84e-04	2.19e-02	-0.25
35	17	3823	2.49	-9.34	-5.97	-0.88	5.34	9.85e-02	-9.97e-02	-5.28e-03	4.11e-03	-9.90e-02
35	17	3824	3.04	-8.79	-5.27	-0.48	5.41	0.25	-0.25	-3.60e-03	3.97e-03	-0.25
35	17	3825	3.00	-8.34	-4.57	-0.78	5.34	9.59e-02	-9.45e-02	-3.30e-03	4.69e-03	-9.51e-02
35	17	3826	3.48	-7.46	-3.58	-0.41	5.24	0.24	-0.24	-1.61e-03	3.16e-03	-0.24
35	17	3827	3.23	-6.46	-2.61	-0.62	4.74	8.79e-02	-8.40e-02	3.26e-03	6.67e-04	-8.60e-02
35	17	3828	3.85	-4.84	-1.20	0.21	4.29	0.19	-0.21	-5.21e-04	-1.83e-02	-0.20
35	17	3829	4.88	-3.77	0.30	0.81	4.32	0.10	-6.83e-02	9.78e-02	-6.35e-02	-2.82e-02

M_G			**N max**	**N min**	**N 1**	**N 2**	**N 1-2**	**M max**	**M min**	**M 1**	**M 2**	**M 1-2**
				-11.35	-11.35	-1.38	-2.11		-2.75	-2.75	-0.34	-0.30
			11.33		11.33	1.39	5.66	2.74		2.74	0.34	0.08

Macro	Tipo	Angolo 1-X (gradi)
36	**Guscio**	**0.0**

M_G	**CDC**	**Nodo**	**N max**	**N min**	**N 1**	**N 2**	**N 1-2**	**M max**	**M min**	**M 1**	**M 2**	**M 1-2**
			kN/ m	kN/ m	kN/ m	kN/ m	kN/ m	kN	kN	kN	kN	kN
36	1	4076	2.18	-2.97	2.11	-2.90	-0.60	0.58	-0.12	0.14	0.32	-0.34
36	1	4077	8.40	-3.23	5.26	-8.49e-02	5.16	1.73	-0.75	1.72	-0.75	-9.39e-02
36	1	4078	12.97	3.45	12.95	3.48	0.45	0.75	-1.02	-0.52	0.26	-0.79
36	1	4079	9.99	-0.67	9.97	-0.65	-0.51	0.30	-3.45	-3.26	0.10	-0.83
36	1	4080	8.82	3.39e-02	8.82	3.39e-02	-2.30e-03	0.15	-4.47	-4.41	8.53e-02	-0.52
36	1	4081	7.89	7.35e-02	7.89	7.35e-02	1.40e-02	8.71e-02	-4.81	-4.80	8.29e-02	-0.14
36	1	4082	7.28	8.10e-02	7.28	8.10e-02	5.00e-03	9.57e-02	-4.59	-4.58	8.21e-02	0.25
36	1	4083	6.84	9.48e-02	6.84	9.48e-02	-1.72e-03	0.18	-3.82	-3.72	8.12e-02	0.63
36	1	4084	6.45	0.14	6.45	0.14	2.50e-03	0.42	-2.44	-2.10	8.28e-02	0.93
36	1	4085	5.90	0.31	5.90	0.31	-2.49e-02	1.47	-0.72	0.64	0.11	1.06
36	1	4086	3.22	-0.78	3.19	-0.75	-0.31	6.11	0.39	6.07	0.42	0.44
36	1	4087	8.03	-2.70	5.92	-0.59	4.27	11.11	-1.55	11.09	-1.52	-0.53
36	1	4088	13.30	3.03	13.29	3.04	0.38	4.83	0.31	4.74	0.40	-0.63
36	1	4089	12.44	-0.57	12.42	-0.54	-0.55	1.38	-1.09	0.21	7.73e-02	-1.23
36	1	4090	12.14	6.60e-02	12.14	6.61e-02	-2.66e-02	0.50	-2.72	-2.29	7.53e-02	-1.09
36	1	4091	11.74	8.38e-02	11.74	8.38e-02	6.63e-03	0.23	-3.94	-3.80	7.90e-02	-0.77
36	1	4092	11.48	8.17e-02	11.48	8.17e-02	3.43e-03	0.11	-4.63	-4.60	8.06e-02	-0.39
36	1	4093	11.33	8.23e-02	11.33	8.23e-02	-4.14e-04	8.12e-02	-4.83	-4.83	8.11e-02	1.72e-02
36	1	4094	11.28	8.44e-02	11.28	8.44e-02	-3.89e-03	0.12	-4.56	-4.52	8.05e-02	0.42
36	1	4095	11.29	9.14e-02	11.29	9.14e-02	-6.29e-03	0.24	-3.79	-3.63	7.92e-02	0.80
36	1	4096	11.33	9.75e-02	11.33	9.75e-02	1.84e-02	0.55	-2.48	-2.01	7.83e-02	1.10
36	1	4097	11.15	-0.21	11.14	-0.20	0.31	1.65	-0.87	0.69	9.39e-02	1.22
36	1	4098	10.25	1.43	10.22	1.47	-0.56	5.88	0.36	5.82	0.42	0.58
36	1	4099	7.81	-0.85	7.79	-0.83	0.46	11.59	-1.57	11.59	-1.57	-3.04e-02
36	1	4100	11.32	1.83	11.28	1.86	0.57	5.76	0.36	5.70	0.42	-0.57
36	1	4101	11.84	-0.31	11.83	-0.29	-0.37	1.61	-0.87	0.65	9.14e-02	-1.21
36	1	4102	11.92	9.01e-02	11.92	9.01e-02	-2.18e-02	0.53	-2.49	-2.03	7.79e-02	-1.08
36	1	4103	11.80	9.02e-02	11.80	9.02e-02	5.87e-03	0.24	-3.79	-3.63	7.92e-02	-0.78
36	1	4104	11.71	8.45e-02	11.71	8.45e-02	3.38e-03	0.12	-4.53	-4.50	8.06e-02	-0.41
36	1	4105	11.68	8.35e-02	11.68	8.35e-02	-1.01e-04	8.11e-02	-4.78	-4.78	8.11e-02	-3.99e-03
36	1	4106	11.72	8.46e-02	11.72	8.46e-02	-3.56e-03	0.12	-4.54	-4.50	8.06e-02	0.40
36	1	4107	11.83	9.03e-02	11.83	9.03e-02	-5.95e-03	0.23	-3.79	-3.64	7.91e-02	0.77
36	1	4108	11.97	8.97e-02	11.97	8.97e-02	2.20e-02	0.53	-2.49	-2.04	7.77e-02	1.07
36	1	4109	11.89	-0.31	11.88	-0.30	0.38	1.59	-0.87	0.62	9.05e-02	1.20
36	1	4110	11.38	1.86	11.35	1.89	-0.57	5.71	0.36	5.65	0.42	0.56
36	1	4111	7.81	-0.85	7.78	-0.82	-0.50	11.59	-1.57	11.59	-1.57	5.66e-02
36	1	4112	10.16	1.40	10.13	1.44	0.56	5.94	0.36	5.87	0.42	-0.59
36	1	4113	11.07	-0.21	11.06	-0.20	-0.31	1.67	-0.87	0.71	9.52e-02	-1.23
36	1	4114	11.24	9.77e-02	11.24	9.77e-02	-1.81e-02	0.56	-2.47	-1.99	7.85e-02	-1.11
36	1	4115	11.20	9.11e-02	11.20	9.11e-02	6.36e-03	0.25	-3.78	-3.62	7.91e-02	-0.81
36	1	4116	11.20	8.41e-02	11.20	8.41e-02	3.78e-03	0.12	-4.55	-4.51	8.05e-02	-0.43
36	1	4117	11.27	8.20e-02	11.27	8.20e-02	1.51e-04	8.12e-02	-4.82	-4.82	8.11e-02	-2.65e-02
36	1	4118	11.44	8.14e-02	11.44	8.14e-02	-3.81e-03	0.11	-4.63	-4.59	8.06e-02	0.38
36	1	4119	11.74	8.33e-02	11.74	8.33e-02	-7.07e-03	0.22	-3.94	-3.80	7.89e-02	0.76
36	1	4120	12.17	6.41e-02	12.17	6.42e-02	2.65e-02	0.49	-2.72	-2.30	7.50e-02	1.08
36	1	4121	12.51	-0.58	12.49	-0.56	0.55	1.36	-1.09	0.19	7.66e-02	1.22
36	1	4122	13.47	3.09	13.45	3.10	-0.39	4.76	0.31	4.67	0.40	0.63
36	1	4123	8.14	-2.73	6.01	-0.60	-4.31	11.11	-1.55	11.08	-1.53	0.57
36	1	4124	3.27	-0.78	3.25	-0.76	0.32	6.16	0.39	6.12	0.43	-0.45

36	1	4125	5.98	0.31	5.98	0.31	2.40e-02	1.49	-0.72	0.65	0.11	-1.07
36	1	4126	6.54	0.14	6.54	0.14	-2.70e-03	0.43	-2.43	-2.09	8.31e-02	-0.93
36	1	4127	6.93	9.51e-02	6.93	9.51e-02	1.84e-03	0.18	-3.82	-3.71	8.12e-02	-0.63
36	1	4128	7.35	8.11e-02	7.35	8.11e-02	-4.78e-03	9.64e-02	-4.59	-4.58	8.21e-02	-0.26
36	1	4129	7.96	7.33e-02	7.96	7.33e-02	-1.37e-02	8.66e-02	-4.81	-4.81	8.28e-02	0.14
36	1	4130	8.88	3.27e-02	8.88	3.27e-02	2.55e-03	0.14	-4.48	-4.42	8.51e-02	0.52
36	1	4131	10.05	-0.68	10.02	-0.65	0.51	0.29	-3.47	-3.28	0.10	0.82
36	1	4132	13.06	3.49	13.04	3.51	-0.46	0.73	-1.06	-0.59	0.26	0.79
36	1	4133	8.46	-3.25	5.30	-8.68e-02	-5.20	1.69	-0.76	1.68	-0.75	0.12
36	1	4134	2.19	-2.99	2.12	-2.92	0.61	0.58	-9.16e-02	0.16	0.33	0.32
36	1	4135	0.12	-2.07	-0.28	-1.68	-0.84	1.76	-0.43	-0.36	1.69	-0.38
36	1	4136	3.99	-1.67	3.96	-1.63	-0.42	4.44	1.50	2.95	2.99	-1.47
36	1	4137	7.19	0.68	6.97	0.91	1.20	1.31	-2.65	-1.56	0.22	-1.77
36	1	4138	8.27	0.42	7.99	0.71	1.46	0.27	-3.84	-3.13	-0.45	-1.56
36	1	4139	7.18	0.24	7.09	0.32	0.78	-0.40	-4.38	-4.12	-0.66	-0.99
36	1	4140	6.57	0.22	6.52	0.26	0.52	-0.71	-4.50	-4.48	-0.73	-0.28
36	1	4141	6.10	0.21	6.07	0.23	0.38	-0.67	-4.31	-4.26	-0.73	0.45
36	1	4142	5.69	0.18	5.67	0.20	0.32	-0.25	-3.84	-3.44	-0.65	1.13
36	1	4143	5.25	9.80e-02	5.22	0.13	0.40	0.63	-3.01	-1.92	-0.46	1.67
36	1	4144	4.63	-0.32	4.49	-0.18	0.82	2.16	-1.72	0.49	-5.32e-02	1.92
36	1	4145	4.30	-1.13	4.14	-0.97	0.93	4.56	0.48	3.88	1.16	1.52
36	1	4146	7.18	-1.21	7.17	-1.20	-0.30	13.82	6.49	13.81	6.50	-0.25
36	1	4147	9.59	0.51	9.55	0.55	0.57	4.72	-0.29	3.56	0.88	-2.12
36	1	4148	10.81	0.46	10.77	0.51	0.69	2.33	-2.31	0.14	-0.11	-2.31
36	1	4149	10.32	0.23	10.31	0.24	0.33	0.86	-3.45	-2.10	-0.49	-2.00
36	1	4150	10.07	0.22	10.07	0.22	0.23	-6.56e-02	-4.10	-3.51	-0.66	-1.43
36	1	4151	9.90	0.22	9.89	0.22	0.14	-0.59	-4.41	-4.26	-0.74	-0.73
36	1	4152	9.77	0.21	9.77	0.21	7.73e-02	-0.76	-4.48	-4.48	-0.76	3.07e-02
36	1	4153	9.69	0.21	9.69	0.21	3.07e-02	-0.56	-4.36	-4.19	-0.73	0.78
36	1	4154	9.62	0.20	9.62	0.20	6.05e-03	4.38e-03	-3.99	-3.35	-0.64	1.47
36	1	4155	9.53	0.17	9.53	0.17	2.83e-02	0.98	-3.27	-1.84	-0.45	2.01
36	1	4156	9.40	0.19	9.40	0.19	6.39e-02	2.54	-2.03	0.55	-4.67e-02	2.26
36	1	4157	8.41	-0.15	8.40	-0.14	0.30	4.97	0.15	4.03	1.09	1.91
36	1	4158	9.15	-1.32	9.15	-1.32	-2.49e-02	14.35	6.68	14.35	6.68	7.96e-03
36	1	4159	8.97	2.04e-02	8.97	2.25e-02	-0.13	4.94	0.13	4.00	1.06	-1.90
36	1	4160	10.04	0.26	10.04	0.26	0.10	2.49	-2.02	0.52	-5.25e-02	-2.24
36	1	4161	10.03	0.18	10.03	0.18	5.58e-02	0.94	-3.25	-1.85	-0.45	-1.98
36	1	4162	10.03	0.20	10.03	0.20	5.81e-02	-1.88e-02	-3.97	-3.35	-0.64	-1.44
36	1	4163	10.02	0.21	10.02	0.21	2.93e-02	-0.57	-4.33	-4.17	-0.73	-0.75
36	1	4164	10.02	0.21	10.02	0.21	-6.96e-03	-0.75	-4.44	-4.44	-0.75	-7.65e-03
36	1	4165	10.04	0.20	10.04	0.20	-4.23e-02	-0.57	-4.33	-4.18	-0.73	0.74
36	1	4166	10.06	0.20	10.06	0.20	-6.86e-02	-3.12e-02	-3.97	-3.36	-0.64	1.42
36	1	4167	10.07	0.18	10.07	0.18	-6.28e-02	0.92	-3.25	-1.87	-0.45	1.96
36	1	4168	10.09	0.27	10.09	0.27	-0.11	2.47	-2.02	0.50	-5.53e-02	2.23
36	1	4169	9.01	3.27e-02	9.01	3.46e-02	0.13	4.92	0.12	3.99	1.05	1.89
36	1	4170	9.15	-1.31	9.15	-1.31	4.41e-02	14.34	6.68	14.34	6.68	-1.66e-02
36	1	4171	8.38	-0.15	8.37	-0.14	-0.30	4.99	0.16	4.05	1.10	-1.91
36	1	4172	9.35	0.19	9.35	0.19	-6.52e-02	2.56	-2.03	0.58	-4.46e-02	-2.28
36	1	4173	9.48	0.17	9.48	0.17	-2.83e-02	1.00	-3.27	-1.82	-0.45	-2.02
36	1	4174	9.58	0.20	9.58	0.20	-1.06e-02	1.94e-02	-3.99	-3.34	-0.64	-1.48
36	1	4175	9.66	0.21	9.66	0.21	-4.09e-02	-0.55	-4.36	-4.18	-0.73	-0.80
36	1	4176	9.76	0.21	9.76	0.21	-9.29e-02	-0.76	-4.48	-4.48	-0.76	-4.88e-02
36	1	4177	9.90	0.22	9.90	0.22	-0.16	-0.60	-4.40	-4.26	-0.74	0.71
36	1	4178	10.10	0.22	10.09	0.22	-0.25	-7.91e-02	-4.09	-3.51	-0.66	1.41
36	1	4179	10.38	0.23	10.37	0.24	-0.36	0.84	-3.44	-2.11	-0.49	1.98
36	1	4180	10.91	0.47	10.86	0.52	-0.73	2.30	-2.30	0.12	-0.12	2.30
36	1	4181	9.69	0.54	9.65	0.58	-0.59	4.70	-0.31	3.54	0.86	2.11
36	1	4182	7.28	-1.21	7.27	-1.20	0.29	13.80	6.47	13.79	6.48	0.24
36	1	4183	4.38	-1.14	4.21	-0.97	-0.95	4.57	0.48	3.89	1.16	-1.52
36	1	4184	4.71	-0.32	4.57	-0.18	-0.83	2.18	-1.73	0.51	-5.27e-02	-1.93
36	1	4185	5.33	9.63e-02	5.30	0.13	-0.40	0.64	-3.02	-1.91	-0.46	-1.68
36	1	4186	5.77	0.18	5.76	0.20	-0.32	-0.24	-3.84	-3.44	-0.65	-1.14
36	1	4187	6.17	0.21	6.15	0.23	-0.37	-0.67	-4.32	-4.26	-0.73	-0.46
36	1	4188	6.63	0.22	6.59	0.26	-0.52	-0.71	-4.50	-4.48	-0.73	0.27
36	1	4189	7.24	0.24	7.15	0.33	-0.77	-0.41	-4.39	-4.13	-0.66	0.97
36	1	4190	8.33	0.43	8.04	0.72	-1.47	0.25	-3.86	-3.15	-0.45	1.55
36	1	4191	7.24	0.70	7.01	0.93	-1.20	1.29	-2.67	-1.59	0.21	1.77
36	1	4192	4.02	-1.67	3.99	-1.64	0.43	4.42	1.47	2.92	2.98	1.47
36	1	4193	0.12	-2.09	-0.28	-1.69	0.84	1.77	-0.45	-0.37	1.70	0.39
36	1	4194	0.15	-5.78	0.11	-5.75	0.45	0.42	-1.31	0.12	-1.01	-0.66
36	1	4195	1.71	-2.69	1.48	-2.46	-0.97	1.33	-2.78	6.61e-02	-1.52	-1.89
36	1	4196	3.26	-3.02e-02	3.05	0.18	0.81	0.96	-3.04	-0.90	-1.17	-1.99
36	1	4197	4.22	0.51	3.84	0.89	1.13	-0.33	-3.62	-2.58	-1.37	-1.53
36	1	4198	4.49	0.58	4.19	0.88	1.03	-1.15	-3.80	-3.41	-1.54	-0.94
36	1	4199	4.45	0.55	4.27	0.73	0.82	-1.57	-3.73	-3.69	-1.61	-0.29
36	1	4200	4.34	0.46	4.21	0.58	0.69	-1.52	-3.57	-3.49	-1.59	0.38
36	1	4201	4.20	0.29	4.08	0.40	0.66	-0.96	-3.32	-2.79	-1.49	0.99
36	1	4202	4.11	-9.19e-02	3.95	6.31e-02	0.79	8.56e-02	-2.88	-1.50	-1.30	1.48
36	1	4203	4.26	-1.04	4.00	-0.78	1.14	1.73	-2.19	0.56	-1.02	1.79

36	1	4204	4.66	-2.12	4.38	-1.85	1.33	4.58	-1.40	3.98	-0.79	1.81
36	1	4205	5.74	-1.47	5.71	-1.44	-0.42	5.67	-2.27	5.66	-2.26	-0.28
36	1	4206	7.11	-0.35	7.09	-0.34	0.34	4.42	-1.80	3.37	-0.76	-2.33
36	1	4207	7.46	0.24	7.43	0.27	0.48	1.86	-2.61	0.29	-1.03	-2.14
36	1	4208	7.50	0.53	7.47	0.56	0.48	0.34	-3.25	-1.62	-1.28	-1.79
36	1	4209	7.49	0.57	7.47	0.58	0.35	-0.69	-3.58	-2.82	-1.45	-1.27
36	1	4210	7.46	0.54	7.45	0.55	0.25	-1.35	-3.67	-3.47	-1.55	-0.65
36	1	4211	7.41	0.51	7.41	0.51	0.17	-1.58	-3.65	-3.65	-1.58	2.74e-02
36	1	4212	7.33	0.48	7.33	0.48	0.13	-1.31	-3.64	-3.41	-1.54	0.70
36	1	4213	7.22	0.42	7.22	0.42	0.12	-0.60	-3.52	-2.69	-1.43	1.31
36	1	4214	7.13	0.24	7.12	0.25	0.17	0.48	-3.12	-1.41	-1.23	1.80
36	1	4215	7.12	-0.35	7.10	-0.33	0.40	2.08	-2.42	0.62	-0.97	2.10
36	1	4216	7.13	-1.25	7.08	-1.20	0.63	4.80	-1.56	3.96	-0.71	2.16
36	1	4217	7.16	-1.48	7.16	-1.48	-2.54e-02	5.95	-2.23	5.95	-2.23	3.35e-03
36	1	4218	7.38	-1.07	7.36	-1.05	-0.41	4.75	-1.56	3.90	-0.71	-2.15
36	1	4219	7.42	-0.23	7.42	-0.22	-0.19	2.03	-2.41	0.59	-0.97	-2.08
36	1	4220	7.42	0.30	7.42	0.30	3.18e-03	0.44	-3.10	-1.42	-1.24	-1.77
36	1	4221	7.47	0.44	7.47	0.44	2.37e-02	-0.63	-3.49	-2.70	-1.43	-1.28
36	1	4222	7.52	0.47	7.52	0.47	7.41e-03	-1.32	-3.61	-3.39	-1.54	-0.68
36	1	4223	7.55	0.48	7.55	0.48	-1.62e-02	-1.58	-3.62	-3.62	-1.58	-6.71e-03
36	1	4224	7.54	0.47	7.54	0.47	-3.82e-02	-1.33	-3.61	-3.40	-1.54	0.66
36	1	4225	7.50	0.44	7.50	0.44	-4.92e-02	-0.65	-3.49	-2.70	-1.43	1.27
36	1	4226	7.46	0.29	7.46	0.29	-2.03e-02	0.42	-3.10	-1.44	-1.24	1.75
36	1	4227	7.47	-0.23	7.46	-0.23	0.19	2.01	-2.40	0.58	-0.97	2.06
36	1	4228	7.42	-1.07	7.40	-1.04	0.42	4.72	-1.56	3.88	-0.71	2.14
36	1	4229	7.19	-1.47	7.19	-1.47	5.45e-02	5.95	-2.23	5.95	-2.23	-8.72e-03
36	1	4230	7.15	-1.26	7.10	-1.21	-0.62	4.83	-1.56	3.98	-0.71	-2.17
36	1	4231	7.13	-0.35	7.11	-0.33	-0.40	2.10	-2.42	0.64	-0.96	-2.11
36	1	4232	7.14	0.25	7.13	0.26	-0.17	0.50	-3.13	-1.39	-1.23	-1.81
36	1	4233	7.24	0.43	7.24	0.43	-0.13	-0.58	-3.52	-2.68	-1.42	-1.33
36	1	4234	7.35	0.49	7.35	0.49	-0.15	-1.29	-3.64	-3.40	-1.54	-0.72
36	1	4235	7.45	0.52	7.44	0.52	-0.21	-1.58	-3.65	-3.65	-1.58	-4.41e-02
36	1	4236	7.51	0.55	7.50	0.56	-0.29	-1.36	-3.66	-3.47	-1.55	0.63
36	1	4237	7.56	0.57	7.53	0.59	-0.40	-0.70	-3.57	-2.82	-1.45	1.26
36	1	4238	7.59	0.53	7.55	0.57	-0.54	0.32	-3.23	-1.63	-1.28	1.77
36	1	4239	7.56	0.24	7.52	0.28	-0.54	1.84	-2.60	0.27	-1.03	2.12
36	1	4240	7.21	-0.34	7.19	-0.32	-0.39	4.38	-1.81	3.34	-0.77	2.32
36	1	4241	5.83	-1.46	5.81	-1.44	0.41	5.66	-2.27	5.65	-2.26	0.28
36	1	4242	4.75	-2.14	4.48	-1.86	-1.35	4.60	-1.40	4.00	-0.80	-1.81
36	1	4243	4.36	-1.06	4.10	-0.80	-1.15	1.74	-2.20	0.57	-1.02	-1.80
36	1	4244	4.19	-9.93e-02	4.04	5.14e-02	-0.79	0.10	-2.89	-1.49	-1.30	-1.49
36	1	4245	4.28	0.28	4.17	0.39	-0.65	-0.95	-3.33	-2.79	-1.49	-1.00
36	1	4246	4.41	0.46	4.29	0.58	-0.67	-1.52	-3.57	-3.49	-1.59	-0.39
36	1	4247	4.51	0.56	4.34	0.73	-0.80	-1.57	-3.74	-3.70	-1.61	0.28
36	1	4248	4.53	0.60	4.25	0.88	-1.02	-1.15	-3.80	-3.42	-1.54	0.93
36	1	4249	4.25	0.54	3.87	0.91	-1.12	-0.35	-3.62	-2.60	-1.37	1.52
36	1	4250	3.28	-2.29e-04	3.07	0.21	-0.80	0.94	-3.05	-0.94	-1.18	1.99
36	1	4251	1.71	-2.69	1.48	-2.46	0.98	1.32	-2.79	4.52e-02	-1.52	1.90
36	1	4252	0.14	-5.84	0.10	-5.80	-0.44	0.43	-1.33	0.12	-1.02	0.67
36	1	4253	-0.31	-5.63	-0.31	-5.63	7.88e-02	0.28	-2.23	6.04e-02	-2.01	-0.72
36	1	4254	0.22	-2.80	0.16	-2.74	-0.43	0.79	-3.05	-0.24	-2.03	-1.70
36	1	4255	0.81	-0.21	0.79	-0.20	0.12	0.21	-3.09	-1.04	-1.84	-1.60
36	1	4256	1.60	0.67	1.30	0.96	0.43	-0.49	-3.27	-2.01	-1.74	-1.38
36	1	4257	2.22	0.89	1.91	1.20	0.57	-1.17	-3.19	-2.62	-1.73	-0.91
36	1	4258	2.59	0.84	2.35	1.08	0.60	-1.67	-2.90	-2.82	-1.75	-0.29
36	1	4259	2.80	0.66	2.59	0.87	0.63	-1.61	-2.77	-2.65	-1.73	0.35
36	1	4260	2.92	0.41	2.72	0.60	0.67	-0.95	-2.83	-2.10	-1.68	0.91
36	1	4261	3.02	2.87e-02	2.85	0.20	0.69	-3.75e-02	-2.69	-1.09	-1.63	1.30
36	1	4262	3.25	-0.62	3.16	-0.52	0.60	1.11	-2.36	0.47	-1.72	1.35
36	1	4263	3.86	-1.57	3.82	-1.53	0.46	2.51	-2.20	2.36	-2.05	0.81
36	1	4264	4.42	-1.60	4.42	-1.60	4.50e-02	3.20	-2.37	3.19	-2.36	-0.26
36	1	4265	4.83	-0.47	4.80	-0.44	0.37	2.56	-2.33	2.19	-1.96	-1.29
36	1	4266	4.71	0.51	4.67	0.56	0.42	1.32	-2.60	0.31	-1.60	-1.71
36	1	4267	4.89	0.89	4.86	0.92	0.34	0.29	-2.95	-1.16	-1.50	-1.61
36	1	4268	5.05	0.93	5.03	0.94	0.27	-0.57	-3.05	-2.09	-1.53	-1.21
36	1	4269	5.14	0.86	5.13	0.87	0.23	-1.27	-2.89	-2.59	-1.57	-0.63
36	1	4270	5.16	0.79	5.15	0.80	0.22	-1.58	-2.73	-2.73	-1.59	2.67e-02
36	1	4271	5.11	0.73	5.10	0.74	0.23	-1.22	-2.89	-2.54	-1.56	0.68
36	1	4272	5.02	0.64	5.01	0.66	0.24	-0.49	-3.02	-1.99	-1.52	1.24
36	1	4273	4.93	0.44	4.92	0.45	0.24	0.38	-2.87	-1.00	-1.49	1.61
36	1	4274	4.94	-0.11	4.94	-0.10	0.18	1.44	-2.50	0.54	-1.59	1.66
36	1	4275	5.33	-1.13	5.33	-1.13	0.16	2.73	-2.23	2.46	-1.96	1.12
36	1	4276	5.43	-1.72	5.43	-1.72	4.45e-02	3.38	-2.32	3.38	-2.32	2.63e-03
36	1	4277	5.40	-1.02	5.40	-1.02	1.54e-02	2.71	-2.22	2.44	-1.96	-1.11
36	1	4278	5.02	1.28e-02	5.02	1.28e-02	5.00e-03	1.41	-2.49	0.52	-1.60	-1.64
36	1	4279	5.02	0.53	5.01	0.53	-5.23e-02	0.34	-2.86	-1.02	-1.50	-1.58
36	1	4280	5.10	0.69	5.10	0.69	-6.48e-02	-0.53	-3.00	-2.00	-1.53	-1.21
36	1	4281	5.17	0.73	5.17	0.73	-5.20e-02	-1.25	-2.87	-2.53	-1.58	-0.65
36	1	4282	5.21	0.73	5.21	0.73	-2.61e-02	-1.60	-2.70	-2.70	-1.60	-6.10e-03

36	1	4283	5.19	0.72	5.19	0.72	1.73e-03	-1.26	-2.86	-2.54	-1.58	0.64
36	1	4284	5.13	0.68	5.13	0.68	2.14e-02	-0.55	-2.99	-2.01	-1.53	1.20
36	1	4285	5.07	0.50	5.07	0.50	2.34e-02	0.33	-2.85	-1.03	-1.50	1.57
36	1	4286	5.09	-1.04e-02	5.09	-1.03e-02	-1.23e-02	1.39	-2.48	0.51	-1.60	1.62
36	1	4287	5.46	-1.03	5.46	-1.03	6.43e-04	2.69	-2.22	2.43	-1.95	1.11
36	1	4288	5.49	-1.72	5.49	-1.72	-1.46e-02	3.38	-2.31	3.38	-2.31	-9.25e-03
36	1	4289	5.39	-1.13	5.38	-1.13	-0.13	2.74	-2.23	2.47	-1.96	-1.13
36	1	4290	4.99	-8.99e-02	4.99	-8.42e-02	-0.17	1.46	-2.50	0.56	-1.59	-1.66
36	1	4291	4.98	0.46	4.97	0.47	-0.24	0.40	-2.88	-0.99	-1.49	-1.62
36	1	4292	5.08	0.67	5.07	0.69	-0.26	-0.47	-3.03	-1.99	-1.51	-1.25
36	1	4293	5.18	0.75	5.17	0.76	-0.26	-1.20	-2.89	-2.53	-1.56	-0.69
36	1	4294	5.24	0.80	5.23	0.82	-0.26	-1.58	-2.72	-2.72	-1.58	-4.28e-02
36	1	4295	5.23	0.87	5.22	0.89	-0.28	-1.28	-2.87	-2.58	-1.56	0.61
36	1	4296	5.15	0.93	5.13	0.96	-0.33	-0.58	-3.03	-2.09	-1.52	1.19
36	1	4297	5.00	0.89	4.96	0.93	-0.41	0.27	-2.93	-1.17	-1.49	1.59
36	1	4298	4.83	0.51	4.78	0.56	-0.48	1.30	-2.59	0.30	-1.59	1.70
36	1	4299	4.95	-0.48	4.92	-0.44	-0.42	2.55	-2.32	2.18	-1.95	1.29
36	1	4300	4.54	-1.62	4.54	-1.62	-7.38e-02	3.20	-2.37	3.19	-2.35	0.26
36	1	4301	3.98	-1.60	3.94	-1.56	-0.47	2.51	-2.19	2.37	-2.05	-0.81
36	1	4302	3.35	-0.64	3.26	-0.55	-0.60	1.12	-2.36	0.48	-1.71	-1.35
36	1	4303	3.11	1.72e-02	2.95	0.18	-0.68	-2.30e-02	-2.69	-1.09	-1.62	-1.30
36	1	4304	2.99	0.41	2.81	0.59	-0.65	-0.93	-2.83	-2.10	-1.67	-0.92
36	1	4305	2.86	0.67	2.68	0.85	-0.61	-1.60	-2.77	-2.65	-1.72	-0.36
36	1	4306	2.63	0.86	2.42	1.07	-0.57	-1.67	-2.90	-2.83	-1.74	0.28
36	1	4307	2.24	0.94	1.97	1.21	-0.53	-1.17	-3.18	-2.63	-1.73	0.90
36	1	4308	1.60	0.73	1.34	0.99	-0.40	-0.50	-3.26	-2.03	-1.73	1.37
36	1	4309	0.82	-0.17	0.81	-0.16	-8.53e-02	0.20	-3.09	-1.05	-1.83	1.60
36	1	4310	0.23	-2.80	0.16	-2.73	0.45	0.78	-3.05	-0.25	-2.03	1.70
36	1	4311	-0.31	-5.65	-0.31	-5.64	-7.99e-02	0.29	-2.23	6.22e-02	-2.01	0.72
36	1	4312	7.27e-02	-4.12	5.30e-02	-4.10	-0.29	0.42	-1.24	0.10	-0.92	-0.65
36	1	4313	0.32	-2.46	0.27	-2.41	-0.39	0.92	-2.16	-0.15	-1.09	-1.46
36	1	4314	-0.42	-0.49	-0.45	-0.46	3.91e-02	0.52	-2.13	-0.75	-0.86	-1.33
36	1	4315	1.10	-0.11	-4.69e-02	1.03	-0.27	9.11e-02	-2.50	-1.47	-0.94	-1.27
36	1	4316	1.28	0.50	0.51	1.27	-7.96e-02	-0.39	-2.31	-1.74	-0.96	-0.88
36	1	4317	1.27	0.91	1.00	1.18	0.16	-0.89	-1.90	-1.80	-0.99	-0.30
36	1	4318	1.55	0.75	1.31	0.99	0.37	-0.83	-1.79	-1.67	-0.95	0.32
36	1	4319	1.79	0.56	1.55	0.80	0.49	-0.29	-2.01	-1.33	-0.97	0.84
36	1	4320	1.87	0.38	1.70	0.55	0.48	0.28	-1.95	-0.74	-0.93	1.11
36	1	4321	1.92	0.13	1.90	0.15	0.19	0.74	-1.48	0.16	-0.91	0.97
36	1	4322	2.35	-1.29	2.13	-1.06	-0.87	1.59	-0.89	1.57	-0.87	0.21
36	1	4323	3.55	-1.60	3.54	-1.59	-6.07e-02	2.40	-1.37	2.39	-1.36	-0.21
36	1	4324	2.69	-0.84	2.35	-0.50	1.05	1.69	-0.91	1.55	-0.76	-0.61
36	1	4325	2.47	0.97	2.44	1.00	0.22	1.07	-1.67	0.12	-0.72	-1.31
36	1	4326	2.65	1.25	2.65	1.25	7.26e-02	0.70	-2.13	-0.75	-0.69	-1.41
36	1	4327	2.88	1.21	2.88	1.21	7.36e-02	0.18	-2.14	-1.28	-0.68	-1.12
36	1	4328	3.00	1.08	2.99	1.09	0.13	-0.33	-1.85	-1.56	-0.63	-0.60
36	1	4329	3.08	0.98	3.05	1.00	0.22	-0.64	-1.64	-1.64	-0.64	2.33e-02
36	1	4330	3.05	0.89	3.01	0.93	0.31	-0.30	-1.86	-1.53	-0.63	0.64
36	1	4331	3.01	0.83	2.95	0.89	0.36	0.21	-2.13	-1.22	-0.69	1.14
36	1	4332	2.88	0.73	2.83	0.79	0.34	0.72	-2.08	-0.65	-0.71	1.40
36	1	4333	2.78	0.44	2.78	0.45	0.11	1.09	-1.59	0.24	-0.74	1.24
36	1	4334	3.00	-1.07	2.82	-0.89	-0.84	1.75	-0.85	1.66	-0.76	0.47
36	1	4335	4.09	-1.68	4.09	-1.68	5.07e-02	2.49	-1.32	2.49	-1.32	1.94e-03
36	1	4336	3.05	-1.09	2.79	-0.84	1.00	1.74	-0.85	1.66	-0.77	-0.46
36	1	4337	2.73	0.54	2.73	0.54	6.26e-02	1.06	-1.58	0.23	-0.75	-1.23
36	1	4338	2.80	0.85	2.79	0.86	-0.15	0.69	-2.08	-0.66	-0.73	-1.38
36	1	4339	2.92	0.92	2.90	0.93	-0.18	0.17	-2.12	-1.23	-0.72	-1.12
36	1	4340	2.97	0.91	2.96	0.92	-0.12	-0.35	-1.85	-1.53	-0.67	-0.62
36	1	4341	3.02	0.91	3.01	0.91	-3.78e-02	-0.68	-1.64	-1.64	-0.68	-5.48e-03
36	1	4342	2.99	0.90	2.99	0.90	4.77e-02	-0.36	-1.85	-1.54	-0.67	0.60
36	1	4343	2.96	0.90	2.95	0.90	0.11	0.16	-2.12	-1.24	-0.72	1.11
36	1	4344	2.87	0.81	2.86	0.81	0.10	0.67	-2.07	-0.67	-0.72	1.37
36	1	4345	2.83	0.48	2.82	0.48	-7.89e-02	1.04	-1.57	0.22	-0.75	1.22
36	1	4346	3.13	-1.11	2.89	-0.87	-0.98	1.73	-0.84	1.65	-0.76	0.45
36	1	4347	4.18	-1.69	4.18	-1.69	-2.06e-02	2.49	-1.31	2.49	-1.31	-1.11e-02
36	1	4348	3.10	-1.07	2.90	-0.87	0.88	1.76	-0.85	1.67	-0.76	-0.47
36	1	4349	2.86	0.48	2.86	0.49	-9.67e-02	1.10	-1.59	0.25	-0.73	-1.25
36	1	4350	2.98	0.78	2.92	0.83	-0.35	0.74	-2.08	-0.64	-0.70	-1.41
36	1	4351	3.12	0.87	3.05	0.94	-0.39	0.23	-2.13	-1.22	-0.69	-1.15
36	1	4352	3.18	0.92	3.12	0.97	-0.35	-0.28	-1.87	-1.52	-0.62	-0.65
36	1	4353	3.21	1.00	3.17	1.03	-0.28	-0.64	-1.64	-1.64	-0.64	-3.85e-02
36	1	4354	3.14	1.09	3.12	1.11	-0.20	-0.34	-1.83	-1.56	-0.62	0.58
36	1	4355	3.02	1.22	3.01	1.23	-0.14	0.17	-2.12	-1.28	-0.67	1.10
36	1	4356	2.80	1.25	2.79	1.26	-0.15	0.69	-2.11	-0.75	-0.68	1.40
36	1	4357	2.63	0.95	2.58	1.00	-0.29	1.06	-1.65	0.11	-0.70	1.29
36	1	4358	2.85	-0.88	2.49	-0.52	-1.11	1.69	-0.89	1.54	-0.74	0.59
36	1	4359	3.69	-1.65	3.69	-1.65	2.40e-02	2.41	-1.36	2.39	-1.35	0.21
36	1	4360	2.47	-1.34	2.25	-1.12	0.88	1.60	-0.87	1.59	-0.85	-0.21
36	1	4361	2.02	9.65e-02	2.01	0.11	-0.18	0.75	-1.47	0.17	-0.89	-0.98

36	1	4362	1.96	0.37	1.80	0.52	-0.46	0.30	-1.95	-0.73	-0.92	-1.12
36	1	4363	1.85	0.57	1.65	0.78	-0.47	-0.27	-2.01	-1.33	-0.96	-0.85
36	1	4364	1.59	0.79	1.41	0.97	-0.33	-0.81	-1.79	-1.67	-0.94	-0.33
36	1	4365	1.25	1.01	1.09	1.17	-0.12	-0.89	-1.90	-1.81	-0.98	0.29
36	1	4366	1.30	0.56	0.58	1.27	0.13	-0.40	-2.30	-1.75	-0.95	0.87
36	1	4367	1.15	-8.57e-02	9.68e-03	1.06	0.33	8.53e-02	-2.50	-1.48	-0.93	1.26
36	1	4368	-0.39	-0.44	-0.41	-0.41	2.30e-02	0.52	-2.12	-0.76	-0.85	1.32
36	1	4369	0.34	-2.42	0.27	-2.35	0.42	0.91	-2.15	-0.15	-1.08	1.45
36	1	4370	7.54e-02	-4.10	5.57e-02	-4.08	0.29	0.42	-1.23	0.10	-0.92	0.65
36	1	4579	0.50	-1.56	-1.11	4.26e-02	0.86	1.61	-0.48	-0.36	1.50	-0.47
36	1	4580	-0.27	-5.65	-0.67	-5.25	1.41	3.89	-9.47e-02	1.30	2.49	-1.90
36	1	4581	2.58	-1.66	-1.13	2.05	-1.40	1.49	-1.49	-0.88	0.88	-1.20
36	1	4582	1.52	-0.97	-0.57	1.13	-0.91	1.36	-1.19	-0.63	0.80	-1.06
36	1	4583	1.52	-0.47	-0.23	1.28	-0.65	1.10	-1.03	-0.77	0.83	-0.71
36	1	4584	0.93	6.31e-02	0.13	0.87	-0.23	1.09	-0.51	-0.48	1.06	-0.24
36	1	4585	1.10	0.30	0.32	1.08	0.10	0.98	-0.66	-0.62	0.94	0.24
36	1	4586	0.92	0.36	0.54	0.74	0.26	1.19	-0.55	-0.30	0.95	0.60
36	1	4587	1.23	0.38	0.61	0.99	0.38	1.21	-0.83	-0.32	0.70	0.88
36	1	4588	1.06	0.65	0.67	1.04	8.27e-02	1.31	-0.47	8.15e-02	0.76	0.82
36	1	4589	2.60	0.73	0.73	2.59	0.11	1.41	0.11	0.35	1.17	0.50
36	1	4590	0.56	-8.40	0.54	-8.39	0.38	4.43	3.98	4.28	4.13	-0.22
36	1	4591	3.17	0.48	0.52	3.12	-0.35	1.69	-2.50e-02	0.34	1.32	-0.71
36	1	4592	1.67	0.69	0.70	1.67	-6.49e-02	1.70	-0.58	0.10	1.02	-1.04
36	1	4593	1.64	0.80	0.85	1.59	-0.20	1.65	-0.89	-0.29	1.04	-1.09
36	1	4594	1.18	0.99	1.00	1.17	-3.63e-02	1.73	-0.54	-0.21	1.39	-0.81
36	1	4595	1.32	1.00	1.01	1.32	4.98e-02	1.55	-0.59	-0.50	1.46	-0.44
36	1	4596	1.21	0.74	1.07	0.88	0.21	1.66	-0.27	-0.27	1.66	8.85e-03
36	1	4597	1.47	0.71	1.00	1.17	0.37	1.54	-0.59	-0.48	1.44	0.46
36	1	4598	1.37	0.54	1.01	0.90	0.41	1.70	-0.53	-0.19	1.35	0.80
36	1	4599	1.57	0.54	0.89	1.21	0.49	1.61	-0.86	-0.25	0.99	1.07
36	1	4600	1.35	0.70	0.79	1.26	0.23	1.62	-0.52	0.14	0.96	0.99
36	1	4601	2.77	0.67	0.72	2.72	0.32	1.61	6.33e-02	0.40	1.28	0.64
36	1	4602	0.57	-8.34	0.56	-8.33	0.24	4.29	4.12	4.28	4.12	-2.68e-02
36	1	4603	2.83	0.57	0.59	2.81	-0.21	1.60	6.84e-02	0.39	1.27	-0.63
36	1	4604	1.34	0.67	0.68	1.34	-6.67e-02	1.60	-0.53	0.13	0.94	-0.99
36	1	4605	1.42	0.62	0.76	1.28	-0.30	1.57	-0.87	-0.26	0.96	-1.06
36	1	4606	1.12	0.67	0.85	0.94	-0.22	1.65	-0.55	-0.20	1.30	-0.80
36	1	4607	1.24	0.76	0.84	1.16	-0.18	1.47	-0.60	-0.49	1.37	-0.45
36	1	4608	0.93	0.80	0.90	0.83	-5.51e-02	1.58	-0.28	-0.28	1.58	-5.07e-03
36	1	4609	1.17	0.85	0.87	1.14	7.93e-02	1.47	-0.60	-0.50	1.37	0.44
36	1	4610	1.02	0.80	0.90	0.92	0.11	1.64	-0.55	-0.21	1.30	0.79
36	1	4611	1.29	0.76	0.86	1.19	0.21	1.56	-0.88	-0.27	0.96	1.06
36	1	4612	1.22	0.81	0.81	1.22	2.98e-02	1.59	-0.53	0.12	0.94	0.98
36	1	4613	2.74	0.71	0.74	2.72	0.22	1.59	7.32e-02	0.39	1.28	0.62
36	1	4614	0.68	-8.36	0.68	-8.36	-0.12	4.31	4.14	4.31	4.14	4.26e-03
36	1	4615	2.81	0.77	0.82	2.77	-0.31	1.63	7.18e-02	0.41	1.29	-0.64
36	1	4616	1.44	0.81	0.91	1.33	-0.23	1.64	-0.52	0.15	0.97	-1.00
36	1	4617	1.69	0.62	1.03	1.28	-0.52	1.62	-0.87	-0.24	1.00	-1.08
36	1	4618	1.53	0.60	1.16	0.97	-0.46	1.71	-0.54	-0.18	1.36	-0.82
36	1	4619	1.62	0.77	1.17	1.22	-0.43	1.55	-0.59	-0.48	1.45	-0.47
36	1	4620	1.40	0.77	1.24	0.93	-0.28	1.67	-0.27	-0.27	1.67	-2.18e-02
36	1	4621	1.41	1.12	1.18	1.35	-0.12	1.56	-0.58	-0.49	1.47	0.43
36	1	4622	1.22	1.15	1.17	1.20	-3.57e-02	1.73	-0.53	-0.21	1.41	0.79
36	1	4623	1.63	1.00	1.02	1.60	0.12	1.66	-0.88	-0.29	1.06	1.08
36	1	4624	1.67	0.87	0.87	1.67	-1.31e-02	1.71	-0.57	0.10	1.04	1.04
36	1	4625	3.12	0.68	0.71	3.09	0.27	1.71	-1.77e-02	0.35	1.34	0.70
36	1	4626	0.71	-8.56	0.71	-8.55	-0.29	4.44	4.04	4.30	4.17	0.19
36	1	4627	2.59	0.84	0.85	2.58	-0.13	1.43	0.12	0.35	1.19	-0.50
36	1	4628	1.03	0.76	0.79	1.01	-7.95e-02	1.33	-0.47	8.43e-02	0.78	-0.83
36	1	4629	1.22	0.46	0.73	0.95	-0.36	1.22	-0.84	-0.32	0.71	-0.89
36	1	4630	0.92	0.44	0.65	0.71	-0.24	1.21	-0.55	-0.30	0.96	-0.61
36	1	4631	1.05	0.42	0.43	1.04	-5.83e-02	0.99	-0.66	-0.62	0.95	-0.25
36	1	4632	0.96	0.11	0.23	0.84	0.29	1.10	-0.51	-0.48	1.07	0.23
36	1	4633	1.57	-0.44	-0.14	1.27	0.71	1.10	-1.03	-0.77	0.84	0.70
36	1	4634	1.61	-0.96	-0.50	1.15	0.99	1.36	-1.19	-0.64	0.81	1.05
36	1	4635	2.67	-1.63	-1.06	2.10	1.46	1.50	-1.49	-0.89	0.89	1.20
36	1	4636	-0.31	-5.50	-0.63	-5.17	-1.27	3.88	-6.70e-02	1.30	2.52	1.88
36	1	4637	0.67	-1.53	-1.09	0.24	-0.88	1.63	-0.48	-0.37	1.52	0.47
36	1	4638	0.32	-4.50	-2.25e-02	-4.15	1.24	1.83	-0.37	-0.11	1.57	-0.71
36	1	4639	7.27	-0.95	-0.46	6.78	-1.95	3.05	0.60	1.19	2.46	-1.05
36	1	4640	0.55	-1.61	-0.80	-0.26	-1.05	2.19	-1.81	-0.80	1.19	-1.74
36	1	4641	1.57	-0.75	-0.33	1.15	-0.89	1.40	-1.28	-0.60	0.72	-1.17
36	1	4642	1.37	-0.62	-0.42	1.18	-0.60	1.68	-0.83	-0.55	1.41	-0.78
36	1	4643	1.29	0.16	0.25	1.20	-0.30	1.00	-0.49	-0.45	0.96	-0.24
36	1	4644	1.01	1.04e-02	3.77e-02	0.99	0.16	1.60	-0.44	-0.40	1.57	0.26
36	1	4645	1.14	0.55	0.63	1.06	0.19	1.14	-0.57	-0.29	0.86	0.63
36	1	4646	1.28	0.14	0.43	0.99	0.49	1.69	-0.70	-0.19	1.18	0.98
36	1	4647	0.86	0.80	0.84	0.83	3.21e-02	1.36	-0.58	5.01e-02	0.73	0.91
36	1	4648	0.98	-1.48	0.97	-1.47	0.17	1.84	-6.80e-02	0.35	1.43	0.79

36	1	4649	12.10	1.21	1.23	12.07	-0.52	4.15	4.02	4.11	4.05	-5.83e-02
36	1	4650	0.84	-0.96	0.82	-0.95	-0.17	2.21	-0.28	0.34	1.59	-1.07
36	1	4651	1.46	0.84	0.85	1.45	-8.14e-02	1.76	-0.70	6.94e-02	0.98	-1.14
36	1	4652	1.62	0.56	0.60	1.57	-0.21	2.18	-0.75	-0.14	1.56	-1.19
36	1	4653	1.52	1.01	1.02	1.50	-8.64e-02	1.66	-0.57	-0.20	1.29	-0.83
36	1	4654	1.23	0.60	0.61	1.22	6.98e-02	2.23	-0.35	-0.27	2.15	-0.47
36	1	4655	1.37	0.98	1.10	1.26	0.17	1.55	-0.25	-0.25	1.55	1.01e-02
36	1	4656	1.33	0.35	0.60	1.08	0.43	2.22	-0.36	-0.26	2.12	0.50
36	1	4657	1.53	0.72	1.02	1.23	0.39	1.63	-0.57	-0.19	1.25	0.83
36	1	4658	1.58	0.25	0.62	1.21	0.59	2.12	-0.73	-0.11	1.50	1.17
36	1	4659	1.19	0.76	0.90	1.05	0.20	1.68	-0.63	0.11	0.93	1.08
36	1	4660	0.96	-1.33	0.92	-1.29	0.32	2.08	-0.15	0.39	1.54	0.95
36	1	4661	11.86	1.19	1.19	11.86	-8.17e-02	4.12	4.04	4.11	4.04	2.11e-02
36	1	4662	0.82	-1.20	0.81	-1.19	-0.11	2.08	-0.16	0.38	1.53	-0.96
36	1	4663	1.13	0.76	0.77	1.12	-6.40e-02	1.66	-0.65	0.10	0.91	-1.08
36	1	4664	1.41	0.35	0.48	1.28	-0.35	2.08	-0.74	-0.12	1.46	-1.17
36	1	4665	1.37	0.74	0.85	1.27	-0.24	1.59	-0.58	-0.20	1.20	-0.83
36	1	4666	1.14	0.38	0.43	1.09	-0.18	2.14	-0.36	-0.27	2.04	-0.48
36	1	4667	1.20	0.89	0.90	1.19	-6.61e-02	1.47	-0.26	-0.26	1.47	-4.94e-03
36	1	4668	1.10	0.44	0.46	1.08	0.11	2.14	-0.36	-0.27	2.04	0.47
36	1	4669	1.26	0.86	0.89	1.23	0.11	1.58	-0.58	-0.20	1.20	0.82
36	1	4670	1.28	0.49	0.59	1.19	0.25	2.07	-0.75	-0.13	1.46	1.16
36	1	4671	1.00	0.91	0.91	1.00	1.92e-02	1.65	-0.65	8.19e-02	0.91	1.07
36	1	4672	0.96	-1.30	0.96	-1.29	0.14	2.07	-0.15	0.38	1.54	0.95
36	1	4673	11.87	1.31	1.31	11.87	3.13e-02	4.14	4.05	4.14	4.06	-1.78e-02
36	1	4674	1.06	-1.27	1.03	-1.23	-0.28	2.10	-0.15	0.40	1.55	-0.96
36	1	4675	1.29	0.84	1.02	1.12	-0.22	1.69	-0.64	0.12	0.94	-1.09
36	1	4676	1.69	0.36	0.76	1.29	-0.61	2.13	-0.73	-0.10	1.51	-1.18
36	1	4677	1.68	0.78	1.17	1.30	-0.45	1.65	-0.57	-0.18	1.26	-0.85
36	1	4678	1.46	0.45	0.77	1.14	-0.47	2.23	-0.36	-0.25	2.13	-0.51
36	1	4679	1.54	1.03	1.27	1.30	-0.25	1.56	-0.25	-0.25	1.56	-2.30e-02
36	1	4680	1.29	0.76	0.79	1.26	-0.12	2.24	-0.35	-0.26	2.16	0.46
36	1	4681	1.52	1.20	1.20	1.52	4.05e-04	1.67	-0.56	-0.20	1.31	0.82
36	1	4682	1.62	0.75	0.78	1.59	0.15	2.18	-0.74	-0.14	1.58	1.18
36	1	4683	1.44	1.02	1.02	1.44	-4.88e-03	1.76	-0.69	7.01e-02	1.00	1.13
36	1	4684	1.01	-1.03	1.01	-1.03	0.12	2.22	-0.26	0.34	1.62	1.06
36	1	4685	12.13	1.40	1.41	12.12	0.37	4.19	4.04	4.14	4.09	6.93e-02
36	1	4686	1.11	-1.54	1.10	-1.53	-0.15	1.87	-6.94e-02	0.35	1.45	-0.80
36	1	4687	0.97	0.78	0.96	0.79	-3.79e-02	1.38	-0.58	5.27e-02	0.75	-0.92
36	1	4688	1.25	0.25	0.55	0.95	-0.46	1.71	-0.70	-0.18	1.20	-0.99
36	1	4689	1.11	0.65	0.74	1.02	-0.18	1.16	-0.57	-0.29	0.87	-0.64
36	1	4690	0.96	0.14	0.15	0.95	-0.10	1.62	-0.44	-0.40	1.59	-0.27
36	1	4691	1.30	0.23	0.35	1.17	0.35	1.01	-0.49	-0.45	0.97	0.23
36	1	4692	1.44	-0.60	-0.33	1.17	0.68	1.69	-0.83	-0.56	1.42	0.77
36	1	4693	1.65	-0.74	-0.26	1.17	0.95	1.40	-1.28	-0.61	0.74	1.16
36	1	4694	0.69	-1.64	-0.72	-0.22	1.13	2.20	-1.81	-0.81	1.20	1.73
36	1	4695	7.38	-0.90	-0.42	6.91	1.92	3.07	0.59	1.19	2.48	1.06
36	1	4696	0.37	-4.32	2.02e-02	-3.97	-1.23	1.84	-0.37	-0.12	1.59	0.70
36	1	4697	1.87	-0.14	-0.14	1.87	2.87e-02	0.65	-0.29	0.17	0.19	-0.47
36	1	4698	3.40	-1.43	-1.43	3.40	2.08e-02	1.29	-1.31	-0.31	0.29	-1.26
36	1	4699	2.46	-0.93	-0.69	2.23	-0.86	2.12	-1.01	-0.60	1.72	-1.05
36	1	4700	1.75	-1.16	-0.80	1.40	-0.96	4.76	1.79	2.03	4.52	-0.80
36	1	4701	2.95	-1.31	-1.09	2.73	-0.94	3.55	-1.14	-1.11	3.52	-0.38
36	1	4702	0.87	-0.87	-0.69	0.69	-0.54	6.14	2.85	2.86	6.13	-0.18
36	1	4703	2.82	-1.00	-0.98	2.79	-0.31	3.86	-1.10	-1.09	3.86	0.12
36	1	4704	1.05	-0.57	-0.56	1.04	-0.12	5.60	2.57	2.61	5.57	0.31
36	1	4705	2.31	-0.49	-0.49	2.31	-9.89e-02	3.01	-0.92	-0.85	2.94	0.51
36	1	4706	2.53	-0.57	-0.50	2.46	-0.46	3.64	1.35	1.54	3.46	0.63
36	1	4707	3.43	-0.66	-4.50e-02	2.81	-1.46	1.88	-0.21	0.11	1.57	0.75
36	1	4708	3.27	-1.31	-1.30	3.27	-0.13	0.79	0.51	0.55	0.75	-9.75e-02
36	1	4709	3.25	-0.47	-0.20	2.97	0.98	2.07	-0.25	0.12	1.70	-0.84
36	1	4710	2.93	-0.85	-0.84	2.91	0.25	4.11	1.39	1.67	3.83	-0.82
36	1	4711	2.86	-0.89	-0.88	2.86	-0.13	3.42	-0.96	-0.88	3.34	-0.59
36	1	4712	1.58	-1.00	-1.00	1.58	1.45e-02	6.32	2.79	2.86	6.26	-0.49
36	1	4713	3.28	-1.36	-1.36	3.28	5.22e-03	4.49	-1.11	-1.11	4.48	-0.21
36	1	4714	1.12	-1.14	-1.12	1.11	0.17	7.15	3.25	3.25	7.15	-2.52e-02
36	1	4715	3.16	-1.45	-1.44	3.15	0.22	4.45	-1.11	-1.10	4.44	0.22
36	1	4716	1.43	-1.19	-1.17	1.40	0.26	6.20	2.76	2.81	6.15	0.43
36	1	4717	2.57	-1.12	-1.11	2.56	0.23	3.33	-0.93	-0.85	3.25	0.58
36	1	4718	2.72	-1.19	-1.19	2.71	-0.17	3.93	1.39	1.62	3.70	0.73
36	1	4719	3.15	-1.00	-0.67	2.81	-1.13	1.99	-0.22	0.12	1.65	0.80
36	1	4720	3.28	-1.92	-1.92	3.28	7.65e-02	0.75	0.54	0.54	0.74	-1.81e-02
36	1	4721	3.14	-1.09	-0.73	2.78	1.18	1.98	-0.22	0.13	1.63	-0.80
36	1	4722	2.78	-1.37	-1.35	2.76	0.31	3.91	1.35	1.60	3.65	-0.77
36	1	4723	2.56	-1.32	-1.32	2.56	-0.13	3.28	-0.93	-0.85	3.20	-0.58
36	1	4724	1.51	-1.47	-1.46	1.51	-0.12	6.12	2.72	2.78	6.06	-0.46
36	1	4725	3.04	-1.71	-1.71	3.03	-0.15	4.37	-1.10	-1.09	4.36	-0.22
36	1	4726	1.25	-1.52	-1.51	1.24	-9.94e-02	7.00	3.20	3.20	7.00	-9.32e-03
36	1	4727	2.93	-1.64	-1.64	2.93	-5.22e-02	4.37	-1.10	-1.09	4.36	0.21

36	1	4728	1.59	-1.42	-1.42	1.58	-5.14e-02	6.12	2.72	2.78	6.06	0.44
36	1	4729	2.35	-1.21	-1.21	2.35	-6.02e-02	3.27	-0.94	-0.86	3.19	0.58
36	1	4730	2.54	-1.22	-1.18	2.50	-0.38	3.87	1.32	1.56	3.63	0.75
36	1	4731	3.07	-0.99	-0.60	2.68	-1.19	1.97	-0.22	0.13	1.63	0.79
36	1	4732	3.31	-1.78	-1.78	3.31	-8.08e-02	0.75	0.56	0.56	0.75	6.30e-03
36	1	4733	3.13	-0.80	-0.47	2.80	1.10	2.00	-0.21	0.13	1.65	-0.80
36	1	4734	2.91	-1.04	-1.03	2.91	0.12	3.94	1.38	1.62	3.70	-0.74
36	1	4735	2.59	-0.90	-0.87	2.56	-0.32	3.34	-0.93	-0.85	3.26	-0.59
36	1	4736	1.62	-1.02	-0.97	1.57	-0.35	6.21	2.76	2.82	6.16	-0.44
36	1	4737	3.16	-1.20	-1.17	3.13	-0.33	4.46	-1.11	-1.10	4.45	-0.23
36	1	4738	1.27	-0.94	-0.91	1.23	-0.26	7.16	3.26	3.26	7.16	6.28e-03
36	1	4739	3.24	-1.10	-1.10	3.24	-0.12	4.51	-1.11	-1.11	4.50	0.20
36	1	4740	1.68	-0.80	-0.80	1.67	-0.10	6.34	2.80	2.87	6.28	0.47
36	1	4741	2.82	-0.64	-0.64	2.82	2.35e-02	3.44	-0.96	-0.88	3.36	0.58
36	1	4742	3.01	-0.69	-0.66	2.98	-0.34	4.12	1.41	1.68	3.85	0.80
36	1	4743	3.32	-0.38	-1.65e-03	2.94	-1.12	2.08	-0.24	0.12	1.72	0.84
36	1	4744	3.14	-1.12	-1.12	3.14	8.47e-02	0.79	0.53	0.56	0.76	8.16e-02
36	1	4745	3.36	-0.51	0.13	2.72	1.44	1.89	-0.20	0.12	1.58	-0.75
36	1	4746	2.54	-0.44	-0.38	2.48	0.44	3.67	1.34	1.54	3.47	-0.65
36	1	4747	2.20	-0.33	-0.33	2.19	6.79e-02	3.02	-0.92	-0.86	2.96	-0.51
36	1	4748	1.07	-0.46	-0.45	1.06	0.12	5.62	2.58	2.61	5.59	-0.33
36	1	4749	2.68	-0.85	-0.82	2.65	0.31	3.88	-1.10	-1.10	3.88	-0.13
36	1	4750	0.95	-0.83	-0.61	0.73	0.58	6.16	2.85	2.86	6.15	0.16
36	1	4751	2.88	-1.21	-0.96	2.63	0.98	3.57	-1.14	-1.11	3.54	0.38
36	1	4752	1.90	-1.15	-0.75	1.50	1.03	4.76	1.80	2.02	4.54	0.79
36	1	4753	2.52	-0.88	-0.62	2.27	0.90	2.12	-1.01	-0.61	1.72	1.05
36	1	4754	3.55	-1.38	-1.38	3.55	4.81e-02	1.27	-1.31	-0.33	0.29	1.25
36	1	4755	2.16	-0.14	-0.14	2.16	-1.55e-02	0.65	-0.28	0.17	0.20	0.47
36	1	4756	1.88	4.49e-02	6.11e-02	1.86	-0.17	0.13	-0.35	3.28e-02	-0.26	-0.19
36	1	4757	2.84	-1.31	-0.68	2.21	-1.49	0.25	-0.32	-4.95e-02	-1.86e-02	-0.28
36	1	4758	3.59	-1.95	-0.50	2.13	-2.44	0.47	-3.42e-02	-3.39e-02	0.47	1.36e-02
36	1	4759	4.80	-2.05	-1.42	4.18	-1.98	0.23	-9.33e-02	-6.86e-02	0.20	-8.58e-02
36	1	4760	3.26	-1.41	-0.46	2.31	-1.88	1.18	0.41	0.41	1.18	-2.38e-02
36	1	4761	5.79	-2.29	-2.07	5.57	-1.30	0.28	-0.20	-0.20	0.28	-2.41e-02
36	1	4762	2.60	-0.88	-0.63	2.35	-0.89	1.29	0.50	0.51	1.29	-4.81e-02
36	1	4763	5.10	-2.25	-2.18	5.03	-0.69	0.26	-0.17	-0.17	0.26	1.33e-02
36	1	4764	2.15	-1.06	-1.01	2.10	-0.41	0.96	0.31	0.32	0.95	-6.53e-02
36	1	4765	3.41	-2.11	-1.99	3.29	-0.81	0.18	-5.54e-02	-2.48e-02	0.15	7.91e-02
36	1	4766	2.47	-1.85	-1.59	2.21	-1.02	0.33	5.17e-02	8.74e-02	0.29	-9.27e-02
36	1	4767	3.69	-2.59	-2.52	3.63	-0.64	2.30e-02	-0.18	-0.18	2.14e-02	-1.73e-02
36	1	4768	2.41	-1.93	-1.92	2.39	-0.26	0.33	0.11	0.11	0.33	3.04e-02
36	1	4769	3.78	-2.72	-2.69	3.75	-0.40	0.20	-0.11	-6.52e-02	0.15	-0.11
36	1	4770	2.64	-2.07	-1.92	2.48	-0.84	1.05	0.39	0.39	1.05	1.91e-03
36	1	4771	5.83	-3.53	-3.50	5.80	-0.52	0.27	-0.25	-0.25	0.27	-4.44e-02
36	1	4772	2.81	-2.04	-1.99	2.76	-0.49	1.44	0.63	0.63	1.44	-1.41e-02
36	1	4773	6.55	-3.91	-3.90	6.54	-0.20	0.30	-0.32	-0.32	0.29	-1.02e-02
36	1	4774	2.67	-2.18	-2.18	2.67	3.00e-02	1.43	0.62	0.62	1.43	-3.72e-02
36	1	4775	5.58	-3.86	-3.85	5.58	6.61e-02	0.26	-0.24	-0.24	0.26	2.33e-02
36	1	4776	2.29	-2.51	-2.50	2.28	0.27	1.03	0.37	0.38	1.02	-5.21e-02
36	1	4777	3.49	-3.47	-3.47	3.49	-0.21	0.18	-9.41e-02	-6.17e-02	0.15	8.88e-02
36	1	4778	2.25	-2.97	-2.93	2.21	-0.45	0.33	7.65e-02	0.10	0.31	-7.75e-02
36	1	4779	3.50	-3.74	-3.74	3.50	-0.14	1.87e-02	-0.18	-0.18	1.85e-02	-6.98e-03
36	1	4780	2.24	-3.05	-3.04	2.23	0.17	0.31	8.97e-02	1.00e-01	0.30	4.70e-02
36	1	4781	3.46	-3.67	-3.67	3.46	-5.72e-02	0.19	-9.61e-02	-5.37e-02	0.15	-0.10
36	1	4782	2.32	-2.89	-2.83	2.26	-0.56	1.01	0.37	0.37	1.01	2.30e-02
36	1	4783	5.48	-4.28	-4.27	5.46	-0.38	0.27	-0.23	-0.22	0.26	-3.53e-02
36	1	4784	2.54	-2.73	-2.70	2.51	-0.41	1.41	0.61	0.61	1.41	8.09e-03
36	1	4785	6.10	-4.44	-4.43	6.10	-0.22	0.29	-0.30	-0.30	0.29	-3.62e-03
36	1	4786	2.41	-2.69	-2.69	2.41	-2.59e-02	1.40	0.60	0.60	1.40	-2.04e-02
36	1	4787	4.92	-4.10	-4.10	4.92	-3.75e-04	0.25	-0.24	-0.24	0.25	2.65e-02
36	1	4788	2.07	-2.80	-2.79	2.06	0.20	1.00	0.36	0.36	1.00	-4.12e-02
36	1	4789	3.11	-3.51	-3.51	3.11	-0.17	0.17	-0.12	-8.71e-02	0.13	9.65e-02
36	1	4790	2.15	-2.94	-2.92	2.14	-0.30	0.31	8.81e-02	0.10	0.30	-5.12e-02
36	1	4791	3.46	-3.58	-3.58	3.46	-3.71e-02	2.50e-02	-0.15	-0.15	2.48e-02	6.06e-03
36	1	4792	2.20	-2.74	-2.73	2.19	0.26	0.33	8.75e-02	0.11	0.31	7.19e-02
36	1	4793	3.43	-3.23	-3.23	3.42	-2.78e-02	0.19	-9.84e-02	-6.40e-02	0.15	-9.25e-02
36	1	4794	2.27	-2.32	-2.25	2.21	-0.54	1.03	0.38	0.38	1.03	4.09e-02
36	1	4795	5.47	-3.60	-3.59	5.46	-0.33	0.26	-0.24	-0.24	0.26	-2.95e-02
36	1	4796	2.59	-1.94	-1.92	2.56	-0.31	1.43	0.63	0.63	1.43	2.57e-02
36	1	4797	6.40	-3.63	-3.63	6.40	-6.81e-02	0.30	-0.31	-0.31	0.30	4.27e-03
36	1	4798	2.65	-1.74	-1.73	2.64	0.21	1.45	0.63	0.63	1.45	2.71e-03
36	1	4799	5.67	-3.25	-3.24	5.66	0.27	0.27	-0.25	-0.25	0.27	3.87e-02
36	1	4800	2.45	-1.76	-1.67	2.37	0.58	1.06	0.40	0.40	1.06	-1.37e-02
36	1	4801	3.68	-2.48	-2.48	3.67	0.16	0.20	-0.11	-7.11e-02	0.15	0.10
36	1	4802	2.31	-1.71	-1.71	2.31	-6.94e-03	0.34	0.11	0.12	0.33	-4.76e-02
36	1	4803	3.60	-2.39	-2.36	3.57	0.42	2.39e-02	-0.16	-0.16	2.32e-02	1.19e-02
36	1	4804	2.29	-1.62	-1.43	2.11	0.84	0.33	5.95e-02	9.17e-02	0.29	8.67e-02
36	1	4805	3.24	-1.93	-1.86	3.16	0.60	0.18	-6.36e-02	-3.11e-02	0.15	-8.32e-02
36	1	4806	1.91	-0.90	-0.88	1.90	0.19	0.96	0.31	0.32	0.96	5.36e-02

36	1	4807	4.82	-2.11	-2.07	4.78	0.51	0.26	-0.17	-0.17	0.25	-1.97e-02
36	1	4808	2.29	-0.73	-0.55	2.10	0.72	1.29	0.51	0.51	1.29	3.65e-02
36	1	4809	5.49	-2.17	-1.99	5.30	1.17	0.28	-0.20	-0.20	0.28	1.86e-02
36	1	4810	3.01	-1.32	-0.40	2.09	1.77	1.18	0.41	0.41	1.18	1.22e-02
36	1	4811	4.61	-1.97	-1.36	4.00	1.91	0.22	-0.11	-8.47e-02	0.20	7.88e-02
36	1	4812	3.53	-1.89	-0.46	2.11	2.38	0.47	-4.21e-02	-4.04e-02	0.47	-2.91e-02
36	1	4813	2.97	-1.24	-0.65	2.38	1.47	0.24	-0.32	-6.44e-02	-2.08e-02	0.28
36	1	4814	2.19	4.76e-02	6.05e-02	2.17	0.17	0.13	-0.35	3.31e-02	-0.26	0.19
36	1	4815	1.58	5.11e-03	7.16e-03	1.58	5.67e-02	2.09e-02	-9.97e-02	-4.94e-04	-7.83e-02	-4.61e-02
36	1	4816	1.81	-0.97	-0.19	1.04	-1.25	0.28	-1.58e-03	0.27	1.12e-02	-5.86e-02
36	1	4817	2.81	-2.20	-0.95	1.56	-2.17	-1.00e-01	-0.26	-0.24	-0.12	-5.77e-02
36	1	4818	2.41	-2.29	-1.23	1.34	-1.97	6.76e-02	-5.84e-02	6.71e-02	-5.79e-02	8.37e-03
36	1	4819	2.59	-2.57	-1.96	1.98	-1.66	-9.79e-02	-0.20	-0.12	-0.18	-4.39e-02
36	1	4820	2.05	-2.52	-2.10	1.64	-1.32	3.09e-02	-8.99e-02	2.79e-02	-8.70e-02	-1.86e-02
36	1	4821	2.23	-2.91	-2.74	2.05	-0.93	-8.89e-02	-0.21	-0.10	-0.19	-3.71e-02
36	1	4822	1.50	-2.86	-2.73	1.37	-0.74	5.87e-02	-9.32e-02	4.61e-02	-8.06e-02	-4.18e-02
36	1	4823	1.69	-3.35	-3.27	1.61	-0.61	-0.12	-0.19	-0.14	-0.17	-3.28e-02
36	1	4824	0.89	-3.37	-3.21	0.74	-0.80	0.16	-6.11e-02	0.15	-4.89e-02	-5.06e-02
36	1	4825	1.65	-4.11	-3.95	1.49	-0.96	-0.14	-0.27	-0.25	-0.17	-4.89e-02
36	1	4826	1.10	-4.08	-4.01	1.02	-0.61	0.11	-3.92e-02	0.11	-3.71e-02	-1.78e-02
36	1	4827	1.59	-4.52	-4.51	1.58	-0.22	-0.17	-0.25	-0.24	-0.17	-1.48e-02
36	1	4828	0.88	-4.33	-4.30	0.85	-0.40	0.14	-5.95e-02	0.14	-5.84e-02	1.46e-02
36	1	4829	1.88	-4.97	-4.92	1.83	-0.55	-0.12	-0.20	-0.13	-0.19	-2.96e-02
36	1	4830	1.56	-4.89	-4.85	1.52	-0.52	2.16e-02	-9.85e-02	2.13e-02	-9.82e-02	6.07e-03
36	1	4831	2.33	-5.45	-5.43	2.31	-0.39	-8.09e-02	-0.22	-8.55e-02	-0.22	-2.50e-02
36	1	4832	1.75	-5.24	-5.23	1.74	-0.24	-5.65e-03	-0.12	-7.87e-03	-0.11	-1.55e-02
36	1	4833	2.24	-5.72	-5.72	2.24	-9.92e-02	-8.44e-02	-0.22	-8.77e-02	-0.22	-2.08e-02
36	1	4834	1.39	-5.43	-5.43	1.39	-1.18e-02	3.31e-02	-0.11	2.29e-02	-9.73e-02	-3.65e-02
36	1	4835	1.67	-5.81	-5.81	1.67	-1.86e-02	-0.13	-0.19	-0.14	-0.19	-1.61e-02
36	1	4836	0.68	-5.51	-5.50	0.67	-0.24	0.15	-6.72e-02	0.14	-5.79e-02	-4.34e-02
36	1	4837	1.46	-6.08	-6.05	1.43	-0.47	-0.16	-0.26	-0.25	-0.17	-3.10e-02
36	1	4838	0.88	-5.87	-5.87	0.87	-0.15	0.11	-4.01e-02	0.11	-3.95e-02	-9.10e-03
36	1	4839	1.44	-6.19	-6.19	1.43	0.16	-0.17	-0.25	-0.25	-0.17	3.42e-03
36	1	4840	0.67	-5.78	-5.78	0.67	-8.37e-02	0.15	-5.87e-02	0.14	-5.54e-02	2.59e-02
36	1	4841	1.64	-6.24	-6.23	1.63	-0.32	-0.14	-0.19	-0.14	-0.18	-9.67e-03
36	1	4842	1.27	-6.00	-5.98	1.25	-0.38	3.34e-02	-9.83e-02	3.09e-02	-9.58e-02	1.80e-02
36	1	4843	2.03	-6.41	-6.40	2.01	-0.35	-8.93e-02	-0.22	-8.98e-02	-0.22	-8.42e-03
36	1	4844	1.22	-5.97	-5.96	1.21	-0.27	-9.05e-03	-0.12	-9.42e-03	-0.12	-6.43e-03
36	1	4845	1.89	-6.36	-6.36	1.89	-0.19	-9.12e-02	-0.22	-9.19e-02	-0.22	-9.77e-03
36	1	4846	0.88	-5.82	-5.82	0.88	-9.63e-02	2.29e-02	-0.11	1.62e-02	-0.11	-2.94e-02
36	1	4847	1.44	-6.11	-6.11	1.44	-0.11	-0.15	-0.19	-0.15	-0.19	-2.76e-03
36	1	4848	0.60	-5.65	-5.64	0.60	-0.22	0.13	-6.28e-02	0.13	-5.81e-02	-3.01e-02
36	1	4849	1.39	-6.02	-6.01	1.37	-0.34	-0.17	-0.25	-0.25	-0.17	-5.26e-03
36	1	4850	0.84	-5.68	-5.68	0.84	-9.94e-02	0.14	-3.44e-02	0.14	-3.40e-02	8.23e-03
36	1	4851	1.33	-5.80	-5.80	1.32	0.18	-0.16	-0.25	-0.24	-0.17	2.65e-02
36	1	4852	0.46	-5.20	-5.19	0.46	-8.00e-02	0.14	-6.73e-02	0.13	-5.99e-02	3.81e-02
36	1	4853	1.45	-5.53	-5.52	1.44	-0.31	-0.14	-0.19	-0.14	-0.19	5.04e-03
36	1	4854	1.13	-5.13	-5.11	1.11	-0.32	3.45e-02	-0.10	2.82e-02	-9.76e-02	2.90e-02
36	1	4855	1.99	-5.42	-5.41	1.98	-0.23	-8.81e-02	-0.22	-8.88e-02	-0.22	9.86e-03
36	1	4856	1.44	-4.91	-4.91	1.44	-8.46e-02	-2.09e-03	-0.11	-2.70e-03	-0.11	8.22e-03
36	1	4857	2.04	-5.13	-5.13	2.04	7.28e-02	-8.50e-02	-0.22	-8.66e-02	-0.22	1.45e-02
36	1	4858	1.23	-4.56	-4.55	1.23	0.21	2.72e-02	-0.10	2.58e-02	-9.88e-02	-1.32e-02
36	1	4859	1.59	-4.67	-4.65	1.58	0.26	-0.13	-0.20	-0.14	-0.19	1.94e-02
36	1	4860	0.63	-4.04	-4.03	0.63	0.13	0.13	-6.42e-02	0.13	-6.11e-02	-2.42e-02
36	1	4861	1.46	-4.31	-4.30	1.45	-5.37e-02	-0.17	-0.24	-0.24	-0.17	-2.19e-03
36	1	4862	0.99	-3.89	-3.86	0.97	0.35	0.14	-3.32e-02	0.14	-3.26e-02	1.08e-02
36	1	4863	1.43	-3.90	-3.80	1.34	0.72	-0.15	-0.27	-0.25	-0.17	4.44e-02
36	1	4864	0.56	-3.15	-3.07	0.47	0.55	0.15	-6.29e-02	0.14	-5.33e-02	4.36e-02
36	1	4865	1.34	-3.24	-3.21	1.31	0.36	-0.14	-0.19	-0.15	-0.18	1.71e-02
36	1	4866	0.89	-2.70	-2.62	0.81	0.52	4.96e-02	-0.10	4.22e-02	-9.53e-02	3.28e-02
36	1	4867	1.85	-2.87	-2.76	1.74	0.72	-9.50e-02	-0.21	-0.10	-0.21	2.59e-02
36	1	4868	1.43	-2.39	-2.03	1.06	1.13	2.02e-02	-0.10	1.91e-02	-0.10	1.15e-02
36	1	4869	2.22	-2.53	-2.00	1.69	1.50	-0.11	-0.21	-0.13	-0.20	3.34e-02
36	1	4870	1.96	-2.24	-1.14	0.86	1.85	4.46e-02	-7.82e-02	4.27e-02	-7.63e-02	-1.52e-02
36	1	4871	2.70	-2.17	-0.96	1.50	2.10	-0.11	-0.26	-0.24	-0.13	4.79e-02
36	1	4872	1.88	-0.90	-0.19	1.17	1.21	0.28	-6.61e-04	0.26	1.10e-02	5.56e-02
36	1	4873	1.85	6.07e-03	7.87e-03	1.85	-5.76e-02	2.05e-02	-9.80e-02	-7.47e-04	-7.67e-02	4.54e-02
36	1	4874	1.17	-9.45e-03	-3.20e-04	1.17	0.10	3.16e-02	-2.74e-02	1.13e-02	-7.19e-03	-2.80e-02
36	1	4875	1.13	-0.84	-0.19	0.48	-0.93	0.29	-1.56e-03	0.27	1.93e-02	-7.48e-02
36	1	4876	1.87	-1.89	-0.94	0.92	-1.64	-9.21e-02	-0.26	-0.22	-0.13	-6.82e-02
36	1	4877	1.19	-2.31	-1.57	0.45	-1.44	0.15	-4.17e-02	0.14	-3.59e-02	-3.25e-02
36	1	4878	1.37	-2.83	-2.46	1.00	-1.18	-0.14	-0.25	-0.22	-0.17	-4.43e-02
36	1	4879	0.63	-3.13	-2.90	0.41	-0.89	0.16	-4.85e-02	0.16	-4.47e-02	-2.80e-02
36	1	4880	1.07	-3.79	-3.71	0.99	-0.62	-0.15	-0.24	-0.22	-0.17	-3.75e-02
36	1	4881	0.26	-4.02	-3.98	0.21	-0.44	0.16	-5.03e-02	0.16	-4.63e-02	-2.88e-02
36	1	4882	0.80	-4.73	-4.70	0.77	-0.41	-0.15	-0.24	-0.22	-0.17	-3.34e-02
36	1	4883	-1.86e-02	-4.95	-4.91	-6.82e-02	-0.49	0.18	-4.56e-02	0.18	-3.96e-02	-3.68e-02
36	1	4884	0.77	-5.74	-5.68	0.71	-0.63	-0.14	-0.26	-0.24	-0.16	-4.23e-02
36	1	4885	8.50e-02	-5.92	-5.89	6.40e-02	-0.35	0.15	-4.47e-02	0.14	-4.21e-02	-2.21e-02

36	1	4886	0.74	-6.45	-6.45	0.73	-9.22e-02	-0.16	-0.25	-0.24	-0.16	-2.10e-02
36	1	4887	-0.11	-6.40	-6.40	-0.12	-0.21	0.17	-4.52e-02	0.17	-4.50e-02	-7.41e-03
36	1	4888	0.84	-7.00	-6.99	0.83	-0.30	-0.16	-0.24	-0.22	-0.17	-2.87e-02
36	1	4889	9.58e-02	-6.94	-6.93	8.15e-02	-0.32	0.15	-5.76e-02	0.15	-5.66e-02	-1.51e-02
36	1	4890	1.04	-7.55	-7.54	1.04	-0.24	-0.18	-0.24	-0.23	-0.19	-2.47e-02
36	1	4891	0.14	-7.39	-7.38	0.14	-0.13	0.15	-6.18e-02	0.15	-6.06e-02	-1.63e-02
36	1	4892	1.00	-7.94	-7.94	1.00	-5.90e-02	-0.18	-0.24	-0.23	-0.19	-2.06e-02
36	1	4893	-1.05e-02	-7.72	-7.72	-1.05e-02	1.75e-02	0.15	-5.94e-02	0.15	-5.80e-02	-1.73e-02
36	1	4894	0.73	-8.21	-8.21	0.73	-5.78e-02	-0.17	-0.23	-0.22	-0.18	-1.64e-02
36	1	4895	-0.27	-8.01	-8.00	-0.27	-0.18	0.17	-5.07e-02	0.17	-4.80e-02	-2.46e-02
36	1	4896	0.65	-8.54	-8.53	0.63	-0.36	-0.16	-0.25	-0.25	-0.17	-2.42e-02
36	1	4897	-0.11	-8.37	-8.37	-0.12	-0.12	0.14	-4.76e-02	0.14	-4.71e-02	-9.27e-03
36	1	4898	0.64	-8.68	-8.68	0.64	0.11	-0.16	-0.24	-0.24	-0.16	-2.30e-03
36	1	4899	-0.26	-8.32	-8.32	-0.26	-6.68e-02	0.18	-4.62e-02	0.18	-4.61e-02	5.86e-03
36	1	4900	0.71	-8.71	-8.70	0.70	-0.22	-0.17	-0.22	-0.22	-0.18	-1.10e-02
36	1	4901	-0.17	-8.37	-8.36	-0.19	-0.34	0.15	-6.26e-02	0.15	-6.25e-02	-4.04e-03
36	1	4902	0.84	-8.81	-8.80	0.83	-0.36	-0.19	-0.23	-0.23	-0.19	-1.17e-02
36	1	4903	-0.21	-8.34	-8.32	-0.23	-0.32	0.14	-6.98e-02	0.14	-6.95e-02	-7.37e-03
36	1	4904	0.77	-8.72	-8.71	0.76	-0.30	-0.19	-0.23	-0.23	-0.19	-7.57e-03
36	1	4905	-0.18	-8.26	-8.25	-0.18	-0.22	0.15	-5.94e-02	0.15	-5.92e-02	-6.75e-03
36	1	4906	0.62	-8.53	-8.52	0.61	-0.24	-0.17	-0.22	-0.22	-0.17	1.19e-03
36	1	4907	-0.19	-8.16	-8.15	-0.20	-0.29	0.17	-4.43e-02	0.17	-4.39e-02	-8.73e-03
36	1	4908	0.64	-8.43	-8.42	0.62	-0.34	-0.16	-0.24	-0.24	-0.16	-7.71e-04
36	1	4909	-0.12	-8.10	-8.09	-0.13	-0.18	0.16	-4.24e-02	0.16	-4.23e-02	4.16e-03
36	1	4910	0.56	-8.25	-8.25	0.56	-3.43e-02	-0.17	-0.24	-0.24	-0.18	1.43e-02
36	1	4911	-0.85	-7.53	-7.53	-0.85	-0.19	0.14	-8.03e-02	0.14	-7.92e-02	1.58e-02
36	1	4912	0.57	-7.97	-7.96	0.56	-0.31	-0.20	-0.22	-0.22	-0.20	6.06e-03
36	1	4913	-0.58	-7.27	-7.25	-0.60	-0.38	0.14	-8.53e-02	0.14	-8.48e-02	1.05e-02
36	1	4914	0.83	-7.69	-7.68	0.82	-0.31	-0.20	-0.22	-0.22	-0.21	9.95e-03
36	1	4915	-0.43	-6.93	-6.92	-0.44	-0.22	0.14	-8.62e-02	0.14	-8.59e-02	8.89e-03
36	1	4916	0.85	-7.30	-7.30	0.85	-9.92e-02	-0.20	-0.23	-0.22	-0.21	1.35e-02
36	1	4917	-0.52	-6.50	-6.50	-0.52	-1.11e-02	0.14	-8.42e-02	0.14	-8.40e-02	7.02e-03
36	1	4918	0.64	-6.80	-6.80	0.64	-8.42e-03	-0.19	-0.23	-0.22	-0.20	1.73e-02
36	1	4919	-0.72	-5.99	-5.98	-0.72	-7.83e-02	0.14	-7.82e-02	0.14	-7.82e-02	1.73e-03
36	1	4920	0.66	-6.25	-6.25	0.66	-0.13	-0.17	-0.24	-0.24	-0.17	1.05e-02
36	1	4921	6.44e-02	-5.72	-5.72	6.28e-02	9.74e-02	0.18	-3.67e-02	0.18	-3.58e-02	1.40e-02
36	1	4922	0.63	-5.58	-5.57	0.61	0.33	-0.16	-0.25	-0.24	-0.17	3.01e-02
36	1	4923	-0.73	-4.66	-4.64	-0.75	0.25	0.14	-8.12e-02	0.13	-7.79e-02	2.68e-02
36	1	4924	0.56	-4.72	-4.72	0.55	0.21	-0.18	-0.23	-0.22	-0.19	1.78e-02
36	1	4925	-0.12	-3.94	-3.92	-0.14	0.22	0.16	-5.75e-02	0.16	-5.54e-02	2.13e-02
36	1	4926	0.77	-3.78	-3.74	0.74	0.40	-0.17	-0.23	-0.22	-0.18	2.60e-02
36	1	4927	0.20	-3.04	-2.89	4.63e-02	0.68	0.15	-5.68e-02	0.15	-5.48e-02	2.02e-02
36	1	4928	1.03	-2.79	-2.52	0.76	0.98	-0.16	-0.24	-0.23	-0.18	3.38e-02
36	1	4929	0.83	-2.24	-1.55	0.14	1.28	0.13	-5.28e-02	0.12	-4.82e-02	2.85e-02
36	1	4930	1.75	-1.87	-0.97	0.85	1.56	-9.73e-02	-0.26	-0.22	-0.13	6.63e-02
36	1	4931	1.14	-0.76	-0.21	0.59	0.86	0.29	4.22e-04	0.27	2.20e-02	7.61e-02
36	1	4932	1.34	-6.19e-03	3.24e-03	1.33	-0.11	3.33e-02	-2.55e-02	1.14e-02	-3.60e-03	2.85e-02
36	1	4933	0.89	-5.86e-02	-5.73e-02	0.89	3.52e-02	8.45e-02	-2.41e-02	-2.26e-02	8.30e-02	-1.27e-02
36	1	4934	0.22	-0.62	0.21	-0.61	-4.96e-02	0.34	0.12	0.24	0.22	-0.11
36	1	4935	0.78	-1.44	-1.03	0.37	-0.86	0.23	-1.09e-02	9.78e-03	0.21	-6.80e-02
36	1	4936	0.36	-2.02	-1.82	0.15	-0.67	0.22	5.23e-02	6.53e-02	0.20	-4.46e-02
36	1	4937	0.33	-3.18	-3.11	0.25	-0.52	0.24	-3.64e-03	5.18e-03	0.23	-4.51e-02
36	1	4938	0.16	-3.70	-3.66	0.12	-0.39	0.21	5.87e-02	6.72e-02	0.21	-3.54e-02
36	1	4939	0.25	-4.77	-4.76	0.24	-0.22	0.23	-2.67e-03	4.14e-03	0.22	-3.93e-02
36	1	4940	6.52e-02	-5.11	-5.10	5.82e-02	-0.19	0.21	5.80e-02	6.45e-02	0.20	-3.07e-02
36	1	4941	0.22	-6.11	-6.10	0.22	-0.14	0.23	-1.96e-03	4.03e-03	0.22	-3.66e-02
36	1	4942	9.38e-04	-6.44	-6.43	-8.75e-03	-0.25	0.21	5.44e-02	6.19e-02	0.20	-3.30e-02
36	1	4943	0.19	-7.53	-7.52	0.18	-0.31	0.24	-3.54e-03	3.31e-03	0.23	-4.02e-02
36	1	4944	0.19	-7.94	-7.93	0.18	-0.16	0.21	4.32e-02	4.71e-02	0.21	-2.54e-02
36	1	4945	0.18	-8.48	-8.48	0.18	4.23e-02	0.24	3.48e-04	3.28e-03	0.23	-2.61e-02
36	1	4946	-3.48e-02	-8.33	-8.32	-3.54e-02	-6.70e-02	0.20	5.72e-02	5.98e-02	0.20	-1.93e-02
36	1	4947	0.22	-8.94	-8.94	0.22	-0.11	0.22	8.01e-04	3.94e-03	0.22	-2.63e-02
36	1	4948	-1.54e-02	-8.83	-8.83	-1.79e-02	-0.15	0.21	5.71e-02	6.07e-02	0.20	-2.29e-02
36	1	4949	0.24	-9.50	-9.50	0.24	-9.32e-02	0.23	8.42e-04	3.39e-03	0.22	-2.38e-02
36	1	4950	-1.80e-02	-9.35	-9.35	-1.85e-02	-6.86e-02	0.20	5.87e-02	6.13e-02	0.20	-1.94e-02
36	1	4951	0.23	-9.99	-9.99	0.23	-6.37e-03	0.23	2.04e-03	3.88e-03	0.22	-2.02e-02
36	1	4952	-1.78e-02	-9.84	-9.84	-1.78e-02	-4.31e-03	0.20	5.64e-02	5.82e-02	0.20	-1.61e-02
36	1	4953	0.18	-10.42	-10.42	0.18	-1.81e-02	0.23	4.02e-03	5.43e-03	0.22	-1.76e-02
36	1	4954	-3.63e-02	-10.35	-10.35	-3.77e-02	-0.12	0.20	5.27e-02	5.51e-02	0.20	-1.86e-02
36	1	4955	0.13	-11.00	-10.99	0.13	-0.21	0.24	3.94e-03	5.70e-03	0.24	-2.03e-02
36	1	4956	0.17	-11.02	-11.02	0.17	-5.38e-02	0.21	4.12e-02	4.20e-02	0.21	-1.14e-02
36	1	4957	0.13	-11.12	-11.12	0.13	0.12	0.24	6.68e-03	6.83e-03	0.24	-5.83e-03
36	1	4958	-5.80e-02	-10.60	-10.60	-5.80e-02	1.92e-03	0.20	5.83e-02	5.86e-02	0.20	-5.71e-03
36	1	4959	0.17	-10.92	-10.92	0.17	-8.71e-02	0.22	5.72e-03	6.03e-03	0.22	-8.27e-03
36	1	4960	-2.17e-02	-10.61	-10.61	-2.39e-02	-0.15	0.20	5.20e-02	5.30e-02	0.20	-1.21e-02
36	1	4961	0.16	-10.93	-10.93	0.16	-0.20	0.23	5.64e-03	5.91e-03	0.23	-7.63e-03
36	1	4962	4.02e-02	-10.62	-10.61	3.79e-02	-0.16	0.21	5.26e-02	5.33e-02	0.20	-1.04e-02
36	1	4963	0.12	-10.84	-10.83	0.11	-0.17	0.23	9.47e-03	9.51e-03	0.23	-3.02e-03
36	1	4964	5.95e-02	-10.53	-10.52	5.82e-02	-0.12	0.21	5.56e-02	5.58e-02	0.21	-5.33e-03

36	1	4965	0.11	-10.76	-10.76	0.11	-0.12	0.23	1.03e-02	1.04e-02	0.23	2.02e-03
36	1	4966	2.21e-02	-10.48	-10.48	2.01e-02	-0.15	0.20	5.56e-02	5.58e-02	0.20	-4.44e-03
36	1	4967	0.12	-10.79	-10.78	0.12	-0.19	0.24	8.20e-03	8.21e-03	0.24	1.11e-03
36	1	4968	0.12	-10.48	-10.48	0.12	-5.39e-02	0.20	5.10e-02	5.10e-02	0.20	1.90e-04
36	1	4969	2.69e-02	-10.42	-10.42	2.69e-02	-8.33e-03	0.24	1.70e-02	1.71e-02	0.24	4.88e-03
36	1	4970	6.25e-02	-10.11	-10.11	6.23e-02	-3.63e-02	0.20	3.21e-02	3.22e-02	0.20	4.38e-03
36	1	4971	-3.97e-02	-9.75	-9.75	-4.24e-02	-0.16	0.24	2.69e-02	2.76e-02	0.24	1.15e-02
36	1	4972	7.40e-02	-9.51	-9.51	7.13e-02	-0.16	0.20	4.01e-02	4.02e-02	0.20	3.23e-03
36	1	4973	1.57e-04	-9.27	-9.27	-3.22e-03	-0.18	0.24	2.66e-02	2.75e-02	0.24	1.39e-02
36	1	4974	7.50e-02	-9.03	-9.03	7.41e-02	-9.46e-02	0.20	4.27e-02	4.29e-02	0.20	6.27e-03
36	1	4975	4.72e-03	-8.81	-8.81	4.03e-03	-7.76e-02	0.24	2.61e-02	2.74e-02	0.24	1.60e-02
36	1	4976	8.06e-02	-8.59	-8.59	8.06e-02	-9.36e-03	0.20	4.11e-02	4.17e-02	0.20	9.39e-03
36	1	4977	-2.30e-02	-8.35	-8.35	-2.33e-02	-5.26e-02	0.24	2.58e-02	2.73e-02	0.24	1.83e-02
36	1	4978	9.62e-02	-8.22	-8.22	9.56e-02	-7.17e-02	0.20	3.34e-02	3.41e-02	0.20	1.06e-02
36	1	4979	5.87e-02	-7.97	-7.97	5.69e-02	-0.12	0.24	1.45e-02	1.69e-02	0.24	2.36e-02
36	1	4980	0.15	-7.44	-7.44	0.15	4.20e-02	0.20	5.88e-02	6.03e-02	0.20	1.48e-02
36	1	4981	4.83e-02	-7.14	-7.14	4.60e-02	0.13	0.24	1.49e-02	1.68e-02	0.24	2.06e-02
36	1	4982	0.13	-6.60	-6.60	0.13	0.14	0.20	2.94e-02	3.17e-02	0.20	1.98e-02
36	1	4983	2.11e-02	-5.91	-5.91	2.10e-02	3.07e-02	0.24	1.39e-02	1.91e-02	0.24	3.38e-02
36	1	4984	0.15	-5.14	-5.13	0.15	7.45e-02	0.21	6.05e-02	6.31e-02	0.21	1.94e-02
36	1	4985	9.82e-02	-4.70	-4.70	9.58e-02	0.11	0.24	6.45e-03	1.10e-02	0.23	3.21e-02
36	1	4986	0.24	-3.84	-3.82	0.23	0.28	0.21	5.85e-02	6.18e-02	0.21	2.26e-02
36	1	4987	0.15	-3.19	-3.14	0.10	0.40	0.24	5.10e-03	1.17e-02	0.24	3.90e-02
36	1	4988	0.42	-2.19	-2.05	0.28	0.59	0.22	4.86e-02	5.71e-02	0.21	3.72e-02
36	1	4989	0.74	-1.46	-1.03	0.31	0.87	0.24	-4.90e-03	1.52e-02	0.22	6.75e-02
36	1	4990	0.25	-0.61	0.25	-0.61	5.91e-04	0.35	0.12	0.24	0.23	0.11
36	1	4991	0.86	-5.91e-02	-5.88e-02	0.86	-1.76e-02	9.38e-02	-2.79e-02	-2.54e-02	9.14e-02	1.70e-02
36	1	4992	0.18	-0.41	2.53e-02	-0.25	0.26	8.08e-02	1.23e-02	4.50e-02	4.80e-02	-3.42e-02
36	1	4993	0.85	0.12	0.85	0.12	-5.11e-02	9.45e-02	-2.83e-02	9.21e-02	-2.59e-02	-1.70e-02
36	1	4994	-0.17	-1.01	-1.01	-0.18	-3.86e-02	4.89e-02	-1.34e-02	2.14e-02	1.41e-02	-3.09e-02
36	1	4995	-2.67e-02	-2.19	-2.19	-2.68e-02	-1.39e-02	2.17e-02	-2.23e-02	2.06e-03	-2.63e-03	-2.19e-02
36	1	4996	-0.14	-3.76	-3.76	-0.14	-3.58e-03	1.28e-02	-2.38e-02	-1.32e-02	2.13e-03	-1.66e-02
36	1	4997	-2.67e-02	-4.43	-4.43	-2.67e-02	-1.13e-02	2.03e-02	-2.07e-02	2.52e-03	-2.93e-03	-2.03e-02
36	1	4998	-0.13	-5.56	-5.56	-0.13	1.03e-02	1.02e-02	-2.27e-02	-1.50e-02	2.49e-03	-1.39e-02
36	1	4999	-2.00e-02	-5.92	-5.92	-2.00e-02	-7.02e-03	1.72e-02	-1.98e-02	2.06e-04	-2.78e-03	-1.84e-02
36	1	5000	-0.13	-6.89	-6.89	-0.13	1.02e-02	8.93e-03	-2.36e-02	-1.70e-02	2.40e-03	-1.30e-02
36	1	5001	-1.16e-02	-7.30	-7.30	-1.16e-02	-1.27e-02	1.60e-02	-1.99e-02	-1.14e-03	-2.75e-03	-1.79e-02
36	1	5002	-0.12	-8.56	-8.56	-0.12	-1.84e-02	8.97e-03	-2.74e-02	-1.97e-02	1.29e-03	-1.48e-02
36	1	5003	-6.07e-02	-9.21	-9.21	-6.07e-02	-6.70e-03	8.61e-03	-2.07e-02	-1.10e-02	-1.13e-03	-1.38e-02
36	1	5004	-0.12	-9.62	-9.62	-0.12	1.87e-02	5.87e-03	-2.49e-02	-2.02e-02	1.13e-03	-1.11e-02
36	1	5005	-1.89e-02	-9.44	-9.44	-1.89e-02	-2.54e-03	9.16e-03	-1.42e-02	-4.03e-03	-1.04e-03	-1.16e-02
36	1	5006	-0.13	-9.97	-9.97	-0.13	3.37e-03	5.69e-03	-2.17e-02	-1.84e-02	2.38e-03	-8.93e-03
36	1	5007	-1.95e-02	-10.05	-10.05	-1.95e-02	-1.17e-02	1.03e-02	-1.51e-02	-2.64e-03	-2.15e-03	-1.27e-02
36	1	5008	-0.13	-10.65	-10.65	-0.13	6.85e-03	5.37e-03	-2.02e-02	-1.73e-02	2.48e-03	-8.10e-03
36	1	5009	-2.04e-02	-10.69	-10.69	-2.04e-02	-1.01e-02	9.30e-03	-1.36e-02	-2.10e-03	-2.19e-03	-1.14e-02
36	1	5010	-0.13	-11.18	-11.18	-0.13	1.15e-02	4.22e-03	-1.95e-02	-1.76e-02	2.32e-03	-6.44e-03
36	1	5011	-2.40e-02	-11.15	-11.15	-2.40e-02	-8.42e-03	7.17e-03	-1.33e-02	-4.22e-03	-1.86e-03	-1.01e-02
36	1	5012	-0.12	-11.58	-11.58	-0.12	1.26e-02	3.42e-03	-2.03e-02	-1.88e-02	1.96e-03	-5.70e-03
36	1	5013	-2.27e-02	-11.67	-11.67	-2.27e-02	-1.56e-02	6.38e-03	-1.36e-02	-5.56e-03	-1.65e-03	-9.79e-03
36	1	5014	-0.11	-12.38	-12.38	-0.11	-1.20e-02	2.57e-03	-2.27e-02	-2.06e-02	5.31e-04	-6.88e-03
36	1	5015	-7.13e-02	-12.63	-12.63	-7.13e-02	-2.45e-03	1.76e-03	-1.60e-02	-1.39e-02	-3.42e-04	-5.73e-03
36	1	5016	-0.11	-12.45	-12.45	-0.11	2.65e-02	9.68e-04	-1.93e-02	-1.87e-02	4.49e-04	-3.20e-03
36	1	5017	-2.29e-02	-11.92	-11.92	-2.29e-02	-5.49e-03	1.88e-03	-7.01e-03	-4.60e-03	-5.38e-04	-3.96e-03
36	1	5018	-0.12	-12.03	-12.03	-0.12	1.28e-02	1.69e-03	-1.90e-02	-1.89e-02	1.57e-03	-1.56e-03
36	1	5019	-2.81e-02	-11.84	-11.84	-2.81e-02	-1.18e-02	2.39e-03	-1.15e-02	-7.63e-03	-1.47e-03	-6.21e-03
36	1	5020	-0.12	-12.12	-12.12	-0.12	1.88e-03	1.43e-03	-1.86e-02	-1.85e-02	1.29e-03	-1.66e-03
36	1	5021	-3.97e-02	-12.00	-12.00	-3.97e-02	-8.06e-03	1.88e-03	-9.89e-03	-6.77e-03	-1.24e-03	-5.19e-03
36	1	5022	-0.11	-12.13	-12.13	-0.11	4.50e-03	8.36e-04	-1.53e-02	-1.53e-02	8.36e-04	-1.08e-04
36	1	5023	-4.15e-02	-11.97	-11.97	-4.15e-02	-4.98e-03	7.42e-04	-6.55e-03	-4.49e-03	-1.32e-03	-3.29e-03
36	1	5024	-0.11	-12.03	-12.03	-0.11	1.12e-02	1.00e-03	-1.56e-02	-1.54e-02	8.46e-04	1.60e-03
36	1	5025	-3.31e-02	-11.88	-11.88	-3.31e-02	-8.59e-03	-6.46e-04	-5.17e-03	-4.13e-03	-1.69e-03	-1.90e-03
36	1	5026	-0.11	-12.12	-12.12	-0.11	-2.02e-03	6.51e-04	-1.82e-02	-1.82e-02	6.44e-04	3.80e-04
36	1	5027	-5.85e-02	-11.94	-11.94	-5.85e-02	2.10e-03	2.55e-04	-7.52e-03	-7.20e-03	-5.77e-05	1.53e-03
36	1	5028	-8.96e-02	-11.72	-11.72	-8.96e-02	6.24e-03	-9.17e-04	-1.64e-02	-1.61e-02	-1.16e-03	1.93e-03
36	1	5029	-7.77e-02	-11.25	-11.25	-7.77e-02	5.25e-03	3.43e-03	-1.66e-02	-1.60e-02	2.87e-03	3.31e-03
36	1	5030	-7.08e-02	-10.96	-10.96	-7.08e-02	-1.08e-03	8.86e-05	-1.31e-02	-1.07e-02	-2.32e-03	5.09e-03
36	1	5031	-7.30e-02	-10.65	-10.65	-7.30e-02	-2.50e-03	2.27e-03	-9.66e-03	-9.12e-03	1.73e-03	2.48e-03
36	1	5032	-7.84e-02	-10.51	-10.51	-7.84e-02	7.98e-04	1.73e-03	-1.23e-02	-8.74e-03	-1.85e-03	6.13e-03
36	1	5033	-7.09e-02	-10.20	-10.20	-7.09e-02	-1.69e-04	2.79e-03	-8.68e-03	-7.44e-03	1.55e-03	3.57e-03
36	1	5034	-8.00e-02	-10.03	-10.03	-8.00e-02	4.00e-03	2.88e-03	-1.33e-02	-8.70e-03	-1.77e-03	7.33e-03
36	1	5035	-7.13e-02	-9.66	-9.66	-7.13e-02	2.56e-03	3.44e-03	-1.00e-02	-8.15e-03	1.54e-03	4.68e-03
36	1	5036	-7.50e-02	-9.50	-9.50	-7.50e-02	3.77e-03	3.15e-03	-1.57e-02	-1.05e-02	-2.07e-03	8.43e-03
36	1	5037	-7.28e-02	-9.22	-9.22	-7.28e-02	-2.28e-03	3.13e-03	-1.57e-02	-1.36e-02	9.85e-04	5.99e-03
36	1	5038	-9.54e-02	-9.10	-9.10	-9.54e-02	4.82e-04	3.27e-03	-1.78e-02	-1.39e-02	-6.14e-04	8.16e-03
36	1	5039	-5.35e-02	-8.59	-8.59	-5.35e-02	1.83e-03	8.31e-03	-9.58e-03	-1.11e-03	-1.57e-04	8.93e-03
36	1	5040	-9.43e-02	-8.18	-8.18	-9.43e-02	7.60e-03	3.57e-03	-1.93e-02	-1.49e-02	-7.61e-04	8.95e-03
36	1	5041	-7.79e-02	-7.36	-7.36	-7.79e-02	6.56e-03	7.11e-03	-2.18e-02	-1.68e-02	2.11e-03	1.09e-02
36	1	5042	-8.98e-02	-6.74	-6.74	-8.98e-02	8.07e-03	8.63e-03	-2.06e-02	-1.13e-02	-6.05e-04	1.36e-02
36	1	5043	-4.21e-02	-5.93	-5.93	-4.21e-02	-6.28e-03	9.72e-03	-1.08e-02	-5.19e-06	-1.08e-03	1.02e-02

36	1	5044	-0.11	-5.50	-5.50	-0.11	6.86e-03	1.01e-02	-2.15e-02	-1.27e-02	1.28e-03	1.42e-02
36	1	5045	-5.00e-02	-4.59	-4.59	-5.00e-02	-2.78e-03	1.10e-02	-1.30e-02	-4.65e-04	-1.56e-03	1.20e-02
36	1	5046	-0.11	-3.82	-3.82	-0.11	2.05e-02	1.34e-02	-2.37e-02	-1.09e-02	6.71e-04	1.76e-02
36	1	5047	-5.30e-02	-2.48	-2.48	-5.30e-02	1.20e-03	1.52e-02	-1.90e-02	-7.27e-04	-3.05e-03	1.71e-02
36	1	5048	-0.16	-1.05	-1.04	-0.17	6.62e-02	5.66e-02	-1.03e-02	3.27e-02	1.37e-02	3.21e-02
36	1	5049	0.85	0.15	0.85	0.15	2.04e-02	9.84e-02	-3.09e-02	9.64e-02	-2.89e-02	1.62e-02
36	1	5050	0.13	-0.41	-9.37e-03	-0.27	-0.23	8.44e-02	1.14e-02	4.97e-02	4.62e-02	3.65e-02
36	20	4076	0.35	0.13	0.35	0.13	-1.73e-02	2.97	-0.67	-0.50	2.80	0.77
36	20	4077	1.22	0.47	1.19	0.50	-0.15	-1.05	-3.44	-1.47	-3.02	0.91
36	20	4078	2.74	0.44	2.68	0.50	-0.37	1.60	-0.67	-0.57	1.50	0.47
36	20	4079	3.85	0.35	3.79	0.40	-0.44	0.14	-1.22	-1.06	-2.31e-02	0.44
36	20	4080	4.81	0.40	4.76	0.45	-0.45	8.52e-02	-1.29	-1.26	5.71e-02	0.19
36	20	4081	5.86	0.36	5.83	0.39	-0.43	-7.42e-02	-1.42	-1.37	-0.12	0.24
36	20	4082	6.82	0.37	6.80	0.39	-0.34	-2.27e-02	-1.33	-1.23	-0.13	0.35
36	20	4083	7.51	0.37	7.51	0.38	-0.21	0.11	-1.11	-0.90	-9.88e-02	0.46
36	20	4084	7.88	0.39	7.88	0.39	-8.73e-02	0.45	-0.60	-0.24	9.03e-02	0.50
36	20	4085	8.19	0.34	8.19	0.34	-0.15	1.11	2.13e-02	1.09	4.33e-02	0.15
36	20	4086	7.71	1.37	7.71	1.37	-6.87e-02	2.77	1.30	2.39	1.68	-0.65
36	20	4087	7.69	7.94e-02	7.69	8.11e-02	-0.11	1.64	-2.42	1.57	-2.35	0.52
36	20	4088	11.03	2.14	11.02	2.14	0.15	1.46	1.04	1.20	1.29	0.20
36	20	4089	11.97	0.46	11.96	0.47	0.27	0.25	-0.31	-3.23e-02	-2.14e-02	0.28
36	20	4090	11.53	0.49	11.53	0.49	-0.10	0.14	-0.78	-0.71	7.19e-02	-0.24
36	20	4091	11.57	0.42	11.57	0.42	-5.94e-02	-9.56e-02	-1.17	-1.14	-0.12	-0.16
36	20	4092	11.49	0.42	11.49	0.42	3.41e-02	-0.13	-1.31	-1.30	-0.14	0.12
36	20	4093	11.22	0.42	11.22	0.42	0.13	-0.10	-1.35	-1.30	-0.15	0.24
36	20	4094	10.75	0.40	10.75	0.41	0.20	1.67e-03	-1.29	-1.15	-0.14	0.40
36	20	4095	10.08	0.37	10.07	0.38	0.29	0.18	-1.09	-0.82	-9.89e-02	0.53
36	20	4096	9.21	0.37	9.19	0.38	0.38	0.53	-0.62	-0.18	8.71e-02	0.56
36	20	4097	8.23	0.22	8.21	0.25	0.41	1.14	1.83e-02	1.12	4.61e-02	0.17
36	20	4098	6.81	1.18	6.79	1.20	0.34	2.73	1.33	2.43	1.63	-0.57
36	20	4099	5.75	4.69e-02	5.75	4.85e-02	9.55e-02	1.74	-2.30	1.66	-2.23	0.55
36	20	4100	7.30	1.55	7.28	1.57	0.33	1.46	1.08	1.29	1.25	0.19
36	20	4101	7.25	0.38	7.23	0.40	0.40	0.29	-0.26	4.65e-02	-1.53e-02	0.28
36	20	4102	6.28	0.32	6.28	0.32	5.44e-03	0.14	-0.71	-0.65	7.10e-02	-0.23
36	20	4103	5.81	0.29	5.81	0.30	5.72e-02	-8.94e-02	-1.10	-1.08	-0.11	-0.16
36	20	4104	5.27	0.28	5.27	0.29	0.21	-0.13	-1.25	-1.24	-0.14	0.12
36	20	4105	4.64	0.26	4.62	0.29	0.32	-9.80e-02	-1.29	-1.25	-0.15	0.23
36	20	4106	3.94	0.23	3.90	0.27	0.38	4.52e-03	-1.24	-1.10	-0.13	0.39
36	20	4107	3.26	0.18	3.19	0.25	0.46	0.18	-1.05	-0.78	-9.50e-02	0.51
36	20	4108	2.81	0.14	2.66	0.29	0.62	0.52	-0.59	-0.16	8.59e-02	0.54
36	20	4109	3.10	-0.22	2.83	4.70e-02	0.90	1.13	2.00e-02	1.11	4.61e-02	0.17
36	20	4110	0.65	-0.64	0.26	-0.25	0.59	2.67	1.29	2.38	1.58	-0.56
36	20	4111	0.28	-0.21	-0.19	0.26	9.46e-02	1.71	-2.23	1.64	-2.16	0.53
36	20	4112	-8.54e-02	-0.61	-0.60	-9.95e-02	8.50e-02	1.43	1.07	1.29	1.22	0.17
36	20	4113	0.24	-0.20	-0.17	0.21	0.12	0.31	-0.25	7.42e-02	-1.33e-02	0.28
36	20	4114	0.17	-3.92	-3.91	0.16	0.15	0.14	-0.68	-0.61	7.00e-02	-0.23
36	20	4115	0.17	-4.21	-4.20	0.16	0.16	-8.09e-02	-1.06	-1.03	-0.11	-0.17
36	20	4116	0.17	-4.52	-4.51	0.15	0.23	-0.12	-1.21	-1.19	-0.13	0.12
36	20	4117	0.16	-4.88	-4.87	0.15	0.25	-9.90e-02	-1.25	-1.21	-0.14	0.22
36	20	4118	0.15	-5.30	-5.30	0.14	0.21	-5.12e-03	-1.21	-1.08	-0.13	0.36
36	20	4119	0.14	-5.80	-5.79	0.13	0.22	0.15	-1.03	-0.79	-9.35e-02	0.48
36	20	4120	0.11	-6.40	-6.38	9.43e-02	0.34	0.48	-0.58	-0.18	8.31e-02	0.52
36	20	4121	3.59e-02	-7.72	-7.64	-4.46e-02	0.79	1.02	1.54e-02	1.00	3.93e-02	0.15
36	20	4122	-1.17	-7.83	-7.79	-1.21	0.49	2.44	1.23	2.17	1.51	-0.51
36	20	4123	0.41	-6.02	-6.02	0.41	-4.68e-02	1.57	-2.19	1.50	-2.13	0.50
36	20	4124	-0.94	-6.60	-6.58	-0.96	-0.31	1.44	1.00	1.25	1.19	0.22
36	20	4125	0.19	-6.33	-6.27	0.13	-0.59	0.33	-0.22	0.12	-8.54e-03	0.27
36	20	4126	0.18	-4.99	-4.95	0.13	-0.49	0.13	-0.56	-0.51	6.96e-02	-0.19
36	20	4127	0.22	-3.97	-3.91	0.16	-0.49	-6.95e-02	-0.89	-0.87	-9.04e-02	-0.13
36	20	4128	0.24	-2.88	-2.81	0.17	-0.46	-0.10	-0.97	-0.97	-0.10	-7.41e-04
36	20	4129	0.28	-1.85	-1.76	0.19	-0.42	-7.00e-02	-0.91	-0.90	-8.88e-02	0.12
36	20	4130	0.28	-1.12	-1.06	0.22	-0.28	0.16	-0.25	-0.15	6.59e-02	0.17
36	20	4131	7.56e-02	-0.95	-0.95	7.43e-02	3.56e-02	0.35	-0.17	0.17	1.26e-02	-0.25
36	20	4132	-0.11	-0.96	-0.91	-0.15	0.20	1.83	0.53	0.99	1.38	-0.62
36	20	4133	0.36	-0.43	-0.43	0.36	7.34e-02	-0.23	-2.15	-0.23	-2.15	-4.88e-02
36	20	4134	-2.95e-02	-0.14	-0.13	-4.00e-02	-3.29e-02	2.33	0.40	0.88	1.85	-0.83
36	20	4135	-6.31e-02	-0.30	-6.74e-02	-0.30	3.16e-02	4.36	-4.02e-02	1.22	3.10	-1.99
36	20	4136	1.21	0.29	1.14	0.36	-0.24	1.67	6.76e-02	8.74e-02	1.65	-0.18
36	20	4137	2.76	0.55	2.50	0.80	-0.70	1.40	-1.27	-0.95	1.07	0.87
36	20	4138	3.44	0.53	3.11	0.86	-0.92	0.16	-1.22	-1.18	0.12	0.22
36	20	4139	4.30	0.50	4.05	0.75	-0.95	-0.11	-1.33	-1.30	-0.14	0.18
36	20	4140	5.13	0.46	4.96	0.64	-0.88	-0.23	-1.34	-1.30	-0.28	0.21
36	20	4141	5.85	0.48	5.76	0.58	-0.71	-0.17	-1.28	-1.15	-0.30	0.36
36	20	4142	6.41	0.50	6.37	0.54	-0.49	1.96e-02	-1.14	-0.86	-0.26	0.50
36	20	4143	6.82	0.52	6.81	0.53	-0.28	0.36	-0.70	-0.26	-8.12e-02	0.52
36	20	4144	6.77	0.55	6.77	0.55	-9.90e-02	0.75	-0.20	0.41	0.13	0.45
36	20	4145	6.69	1.45	6.69	1.45	7.55e-02	2.87	1.14	2.60	1.41	-0.62
36	20	4146	7.91	0.51	7.91	0.51	-8.84e-02	2.40	1.48	2.40	1.48	-2.78e-02
36	20	4147	9.55	1.31	9.54	1.31	-0.21	1.49	0.11	0.71	0.89	0.68

36	20	4148	9.65	0.76	9.64	0.76	-0.15	0.12	-0.31	-0.28	9.44e-02	9.65e-02
36	20	4149	10.06	0.65	10.06	0.66	-0.15	-9.74e-02	-0.81	-0.78	-0.13	-0.14
36	20	4150	10.01	0.58	10.01	0.58	-2.78e-02	-0.24	-1.11	-1.07	-0.28	-0.18
36	20	4151	9.88	0.56	9.88	0.56	0.10	-0.31	-1.21	-1.19	-0.32	0.12
36	20	4152	9.63	0.55	9.62	0.55	0.24	-0.27	-1.25	-1.19	-0.33	0.25
36	20	4153	9.25	0.52	9.23	0.54	0.39	-0.12	-1.24	-1.05	-0.31	0.42
36	20	4154	8.73	0.49	8.70	0.52	0.56	0.11	-1.14	-0.78	-0.25	0.57
36	20	4155	8.11	0.47	8.05	0.53	0.70	0.46	-0.73	-0.20	-7.60e-02	0.59
36	20	4156	7.22	0.41	7.11	0.51	0.83	0.85	-0.24	0.47	0.13	0.52
36	20	4157	6.41	0.77	6.31	0.87	0.74	2.82	1.17	2.61	1.37	-0.54
36	20	4158	6.13	0.56	6.10	0.59	0.39	2.38	1.45	2.38	1.45	1.67e-02
36	20	4159	6.33	1.87	6.28	1.92	0.46	1.50	0.19	0.82	0.87	0.66
36	20	4160	5.94	0.66	5.88	0.73	0.57	0.13	-0.15	-0.11	9.30e-02	9.52e-02
36	20	4161	5.68	0.55	5.65	0.58	0.37	-8.93e-02	-0.75	-0.72	-0.12	-0.14
36	20	4162	5.15	0.47	5.12	0.50	0.41	-0.23	-1.05	-1.01	-0.27	-0.17
36	20	4163	4.63	0.42	4.56	0.49	0.54	-0.29	-1.16	-1.14	-0.31	0.12
36	20	4164	4.08	0.36	3.96	0.48	0.66	-0.25	-1.21	-1.14	-0.32	0.25
36	20	4165	3.51	0.28	3.32	0.47	0.75	-0.11	-1.20	-1.01	-0.30	0.41
36	20	4166	2.99	0.15	2.70	0.45	0.87	0.11	-1.09	-0.74	-0.24	0.55
36	20	4167	2.68	-4.44e-02	2.22	0.42	1.02	0.45	-0.69	-0.17	-7.07e-02	0.57
36	20	4168	2.63	-0.29	1.98	0.36	1.21	0.84	-0.22	0.48	0.13	0.50
36	20	4169	2.50	-0.40	2.19	-0.10	0.89	2.76	1.14	2.56	1.34	-0.53
36	20	4170	2.36	0.49	2.28	0.57	0.39	2.31	1.41	2.31	1.41	1.12e-02
36	20	4171	2.51	0.41	2.46	0.46	0.33	1.48	0.20	0.84	0.85	0.64
36	20	4172	0.66	-0.36	-0.24	0.55	0.32	0.11	-8.87e-02	-8.33e-02	0.11	-3.27e-02
36	20	4173	0.49	-3.21	-3.19	0.46	0.30	-7.81e-02	-0.71	-0.67	-0.11	-0.14
36	20	4174	0.45	-3.50	-3.48	0.42	0.32	-0.21	-1.01	-0.96	-0.26	-0.18
36	20	4175	0.45	-3.83	-3.79	0.42	0.38	-0.28	-1.12	-1.10	-0.30	0.12
36	20	4176	0.45	-4.17	-4.13	0.41	0.42	-0.25	-1.17	-1.11	-0.31	0.23
36	20	4177	0.44	-4.55	-4.52	0.40	0.43	-0.12	-1.16	-0.99	-0.29	0.38
36	20	4178	0.43	-4.99	-4.95	0.38	0.47	8.76e-02	-1.07	-0.75	-0.23	0.52
36	20	4179	0.41	-5.52	-5.46	0.35	0.59	0.41	-0.68	-0.20	-7.03e-02	0.55
36	20	4180	0.40	-5.75	-5.64	0.29	0.83	0.78	-0.23	0.42	0.13	0.48
36	20	4181	-0.66	-5.93	-5.89	-0.70	0.46	2.51	1.07	2.31	1.27	-0.50
36	20	4182	0.48	-5.49	-5.49	0.48	-6.68e-02	2.11	1.34	2.11	1.34	5.01e-02
36	20	4183	-0.36	-5.19	-5.15	-0.39	-0.42	1.48	0.23	0.87	0.84	0.63
36	20	4184	0.53	-4.85	-4.73	0.40	-0.80	0.16	-8.36e-02	-4.72e-02	0.12	8.59e-02
36	20	4185	0.56	-4.42	-4.28	0.42	-0.85	-6.54e-02	-0.60	-0.57	-9.13e-02	-0.11
36	20	4186	0.59	-3.64	-3.45	0.40	-0.86	-0.19	-0.85	-0.82	-0.22	-0.14
36	20	4187	0.60	-2.86	-2.64	0.38	-0.86	-0.24	-0.90	-0.90	-0.24	4.95e-04
36	20	4188	0.59	-2.14	-1.88	0.32	-0.81	-0.18	-0.88	-0.85	-0.21	0.15
36	20	4189	0.45	-1.51	-1.28	0.22	-0.63	-5.38e-02	-0.65	-0.63	-8.16e-02	0.13
36	20	4190	6.50e-02	-0.92	-0.89	2.73e-02	-0.19	0.13	-0.25	-0.23	0.11	-8.47e-02
36	20	4191	-0.41	-0.82	-0.79	-0.44	0.11	1.84	0.56	1.26	1.14	-0.64
36	20	4192	-0.36	-0.47	-0.38	-0.46	3.97e-02	1.21	0.84	0.84	1.21	5.34e-03
36	20	4193	0.14	-0.36	0.14	-0.36	-2.51e-02	2.13	-0.99	-0.53	1.67	1.10
36	20	4194	0.64	-0.23	0.11	0.30	-0.43	2.11	0.21	0.26	2.06	0.30
36	20	4195	1.82	-0.28	0.22	1.32	-0.90	2.90	0.20	0.36	2.74	-0.64
36	20	4196	3.16	-0.30	0.96	1.91	-1.66	1.14	-1.04	-0.50	0.59	-0.94
36	20	4197	4.06	1.89e-02	2.25	1.84	-2.01	-2.24e-02	-1.33	-1.21	-0.14	-0.38
36	20	4198	4.50	0.18	3.21	1.47	-1.98	-0.58	-1.24	-1.21	-0.60	-0.12
36	20	4199	4.88	0.41	4.04	1.25	-1.75	-0.66	-1.15	-1.10	-0.71	0.14
36	20	4200	5.19	0.61	4.68	1.12	-1.43	-0.49	-1.22	-0.96	-0.74	0.35
36	20	4201	5.46	0.78	5.20	1.04	-1.06	-0.16	-1.26	-0.72	-0.69	0.55
36	20	4202	5.68	0.92	5.58	1.02	-0.68	0.22	-1.23	-0.42	-0.59	0.72
36	20	4203	5.97	1.22	5.96	1.23	-0.23	0.84	-0.72	0.26	-0.13	0.76
36	20	4204	6.10	1.57	6.09	1.57	-7.52e-02	1.96	-1.25e-02	1.41	0.53	0.88
36	20	4205	6.12	1.45	6.10	1.48	-0.33	2.43	1.71	2.26	1.88	-0.31
36	20	4206	7.05	1.59	6.96	1.68	-0.68	1.50	-0.17	0.83	0.49	-0.82
36	20	4207	7.76	1.56	7.68	1.64	-0.70	0.18	-0.89	-0.51	-0.20	-0.51
36	20	4208	7.89	1.19	7.87	1.21	-0.40	-0.27	-1.09	-0.76	-0.60	-0.40
36	20	4209	7.96	1.11	7.96	1.11	-8.94e-02	-0.57	-1.04	-0.90	-0.71	-0.22
36	20	4210	7.86	1.07	7.85	1.08	0.19	-0.74	-1.00	-0.99	-0.75	6.48e-02
36	20	4211	7.68	1.04	7.65	1.07	0.45	-0.58	-1.14	-0.97	-0.75	0.26
36	20	4212	7.47	0.95	7.37	1.05	0.77	-0.34	-1.26	-0.87	-0.73	0.45
36	20	4213	7.20	0.85	7.03	1.02	1.03	-1.98e-02	-1.29	-0.64	-0.67	0.64
36	20	4214	6.87	0.74	6.60	1.02	1.28	0.34	-1.25	-0.35	-0.56	0.79
36	20	4215	6.61	0.78	6.19	1.19	1.50	0.94	-0.75	0.31	-0.12	0.82
36	20	4216	5.81	0.37	5.44	0.75	1.38	2.02	-5.34e-02	1.45	0.52	0.93
36	20	4217	5.16	1.38	4.89	1.65	0.97	2.38	1.71	2.27	1.82	-0.25
36	20	4218	5.24	1.39	5.07	1.56	0.80	1.45	-0.12	0.84	0.49	-0.76
36	20	4219	5.16	1.36	4.95	1.56	0.86	0.17	-0.83	-0.47	-0.19	-0.48
36	20	4220	4.86	0.90	4.63	1.14	0.95	-0.25	-1.02	-0.70	-0.58	-0.38
36	20	4221	4.57	0.71	4.25	1.03	1.05	-0.54	-0.99	-0.85	-0.68	-0.21
36	20	4222	4.21	0.56	3.77	1.00	1.19	-0.67	-0.99	-0.94	-0.72	0.12
36	20	4223	3.86	0.37	3.25	0.99	1.33	-0.55	-1.10	-0.93	-0.72	0.26
36	20	4224	3.56	0.13	2.73	0.97	1.47	-0.32	-1.21	-0.83	-0.70	0.44
36	20	4225	3.34	-0.17	2.24	0.93	1.63	-1.03e-02	-1.24	-0.61	-0.64	0.62
36	20	4226	3.21	-0.51	1.82	0.89	1.80	0.34	-1.20	-0.32	-0.53	0.76

36	20	4227	3.14	-0.68	1.59	0.87	1.87	0.92	-0.71	0.32	-0.10	0.79
36	20	4228	2.73	-0.49	1.52	0.72	1.56	1.97	-3.63e-02	1.43	0.51	0.89
36	20	4229	2.49	0.43	1.46	1.46	1.03	2.34	1.67	2.23	1.78	-0.24
36	20	4230	2.39	0.90	1.75	1.54	0.74	1.42	-0.11	0.83	0.48	-0.75
36	20	4231	2.37	0.88	2.04	1.21	0.62	0.19	-0.80	-0.45	-0.17	-0.47
36	20	4232	1.25	-0.36	-9.83e-02	0.99	0.59	-0.22	-0.99	-0.66	-0.54	-0.38
36	20	4233	1.06	-2.54	-2.41	0.94	0.66	-0.50	-0.96	-0.81	-0.64	-0.22
36	20	4234	1.07	-2.83	-2.69	0.93	0.73	-0.67	-0.92	-0.90	-0.69	6.23e-02
36	20	4235	1.08	-3.14	-2.99	0.93	0.78	-0.54	-1.06	-0.91	-0.69	0.24
36	20	4236	1.07	-3.44	-3.28	0.91	0.83	-0.32	-1.16	-0.82	-0.67	0.42
36	20	4237	1.05	-3.74	-3.56	0.88	0.90	-2.65e-02	-1.20	-0.62	-0.61	0.59
36	20	4238	1.02	-3.98	-3.78	0.83	0.98	0.31	-1.16	-0.35	-0.50	0.73
36	20	4239	0.90	-4.16	-3.97	0.71	0.96	0.86	-0.71	0.25	-9.18e-02	0.77
36	20	4240	0.67	-3.93	-3.85	0.59	0.61	1.88	-6.91e-02	1.32	0.49	0.88
36	20	4241	1.19	-3.64	-3.64	1.19	-6.91e-02	2.17	1.68	2.11	1.74	-0.16
36	20	4242	1.09	-4.02	-3.89	0.96	-0.79	1.32	-4.34e-02	0.79	0.49	-0.66
36	20	4243	1.30	-4.03	-3.69	0.96	-1.30	0.16	-0.69	-0.40	-0.13	-0.41
36	20	4244	1.42	-3.68	-3.20	0.95	-1.49	-0.21	-0.86	-0.58	-0.49	-0.32
36	20	4245	1.47	-3.31	-2.75	0.91	-1.53	-0.45	-0.82	-0.70	-0.57	-0.17
36	20	4246	1.47	-2.93	-2.30	0.84	-1.54	-0.59	-0.75	-0.75	-0.59	9.84e-03
36	20	4247	1.38	-2.52	-1.83	0.68	-1.49	-0.40	-0.84	-0.70	-0.54	0.20
36	20	4248	1.09	-2.04	-1.35	0.41	-1.30	-0.15	-0.90	-0.60	-0.45	0.37
36	20	4249	0.57	-1.32	-0.84	9.12e-02	-0.82	0.34	-0.65	-0.25	-5.94e-02	0.48
36	20	4250	-0.27	-0.78	-0.44	-0.61	-0.24	1.16	-0.32	0.38	0.47	0.74
36	20	4251	-0.22	-1.20	-0.22	-1.20	-2.25e-02	2.05	0.88	0.88	2.05	3.23e-02
36	20	4252	-0.11	-0.72	-0.11	-0.71	-5.92e-02	1.85	0.67	0.88	1.64	-0.45
36	20	4253	3.65	-0.20	6.55e-02	3.38	-0.98	1.07	-2.12	-8.07e-02	-0.96	-1.53
36	20	4254	4.91	-0.23	0.46	4.21	-1.76	0.54	-2.24	-0.30	-1.40	-1.28
36	20	4255	5.65	-0.77	1.10	3.78	-2.92	0.44	-1.84	-0.44	-0.96	-1.11
36	20	4256	5.49	-0.91	1.99	2.60	-3.18	-0.19	-1.82	-0.77	-1.24	-0.78
36	20	4257	5.37	-0.40	2.87	2.11	-2.86	-0.71	-1.44	-0.87	-1.28	-0.30
36	20	4258	5.21	3.04e-02	3.43	1.81	-2.46	-0.84	-1.31	-0.84	-1.30	3.52e-02
36	20	4259	5.07	0.42	3.88	1.62	-2.04	-0.60	-1.43	-0.74	-1.29	0.32
36	20	4260	4.98	0.77	4.27	1.48	-1.58	-0.27	-1.60	-0.55	-1.32	0.54
36	20	4261	4.95	1.10	4.61	1.43	-1.08	0.13	-1.73	-0.27	-1.32	0.77
36	20	4262	4.87	1.45	4.79	1.53	-0.52	0.55	-1.87	1.95e-02	-1.35	1.00
36	20	4263	4.89	2.04	4.84	2.08	-0.34	0.49	-1.43	0.18	-1.13	0.70
36	20	4264	5.41	2.95	5.14	3.22	-0.77	8.85e-02	-1.61	8.84e-02	-1.61	1.35e-02
36	20	4265	5.83	2.19	5.39	2.63	-1.19	0.38	-1.41	3.26e-02	-1.06	-0.71
36	20	4266	6.08	1.67	5.82	1.93	-1.04	9.85e-02	-1.74	-0.37	-1.27	-0.80
36	20	4267	6.26	1.60	6.18	1.68	-0.62	-0.32	-1.53	-0.56	-1.29	-0.48
36	20	4268	6.21	1.59	6.20	1.60	-0.16	-0.61	-1.35	-0.68	-1.28	-0.22
36	20	4269	6.13	1.56	6.10	1.59	0.34	-0.77	-1.24	-0.77	-1.24	1.67e-02
36	20	4270	6.06	1.47	5.95	1.58	0.72	-0.67	-1.36	-0.78	-1.24	0.26
36	20	4271	6.02	1.31	5.77	1.56	1.06	-0.44	-1.47	-0.68	-1.23	0.44
36	20	4272	5.97	1.11	5.57	1.52	1.35	-0.13	-1.61	-0.49	-1.25	0.63
36	20	4273	5.96	0.89	5.34	1.50	1.65	0.27	-1.71	-0.19	-1.25	0.84
36	20	4274	5.87	0.69	4.96	1.60	1.97	0.62	-1.86	4.53e-02	-1.28	1.05
36	20	4275	5.60	1.09	4.48	2.20	1.94	0.53	-1.43	0.18	-1.08	0.75
36	20	4276	5.17	2.36	4.23	3.31	1.33	9.03e-02	-1.54	8.99e-02	-1.54	2.61e-02
36	20	4277	4.35	2.36	3.98	2.74	0.78	0.36	-1.31	5.73e-02	-1.01	-0.65
36	20	4278	4.32	1.57	3.96	1.93	0.93	8.48e-02	-1.65	-0.35	-1.22	-0.75
36	20	4279	4.50	1.02	3.88	1.64	1.33	-0.30	-1.46	-0.51	-1.24	-0.45
36	20	4280	4.39	0.68	3.53	1.54	1.57	-0.58	-1.30	-0.64	-1.23	-0.21
36	20	4281	4.24	0.39	3.11	1.52	1.75	-0.73	-1.20	-0.74	-1.19	7.09e-02
36	20	4282	4.10	0.11	2.69	1.52	1.91	-0.63	-1.31	-0.75	-1.19	0.26
36	20	4283	3.98	-0.20	2.29	1.49	2.05	-0.41	-1.42	-0.66	-1.18	0.43
36	20	4284	3.91	-0.53	1.94	1.43	2.20	-0.12	-1.55	-0.47	-1.19	0.62
36	20	4285	3.88	-0.86	1.65	1.37	2.36	0.27	-1.64	-0.18	-1.19	0.81
36	20	4286	3.85	-1.11	1.33	1.40	2.48	0.61	-1.77	5.37e-02	-1.21	1.01
36	20	4287	3.95	-0.71	1.14	2.11	2.28	0.51	-1.37	0.18	-1.04	0.72
36	20	4288	3.88	0.26	1.12	3.01	1.54	9.02e-02	-1.47	8.98e-02	-1.47	2.50e-02
36	20	4289	2.98	0.78	1.14	2.62	0.81	0.37	-1.25	6.96e-02	-0.95	-0.63
36	20	4290	2.21	0.67	1.18	1.70	0.72	0.19	-1.55	-0.21	-1.15	-0.74
36	20	4291	2.30	0.43	1.24	1.49	0.92	-0.26	-1.39	-0.48	-1.17	-0.45
36	20	4292	1.97	-0.64	-0.12	1.45	1.04	-0.53	-1.24	-0.61	-1.16	-0.22
36	20	4293	1.81	-2.01	-1.66	1.47	1.10	-0.71	-1.13	-0.71	-1.13	1.05e-02
36	20	4294	1.82	-2.24	-1.90	1.48	1.12	-0.61	-1.24	-0.72	-1.13	0.24
36	20	4295	1.79	-2.44	-2.11	1.46	1.13	-0.40	-1.35	-0.64	-1.11	0.41
36	20	4296	1.74	-2.59	-2.26	1.41	1.15	-0.12	-1.47	-0.47	-1.13	0.59
36	20	4297	1.67	-2.68	-2.35	1.34	1.16	0.26	-1.57	-0.19	-1.12	0.78
36	20	4298	1.66	-2.79	-2.49	1.35	1.12	0.60	-1.70	4.01e-02	-1.14	0.98
36	20	4299	2.22	-2.83	-2.69	2.08	0.85	0.52	-1.33	0.17	-0.98	0.72
36	20	4300	2.82	-2.75	-2.74	2.81	-0.17	7.90e-02	-1.39	7.44e-02	-1.39	8.19e-02
36	20	4301	2.81	-2.94	-2.62	2.49	-1.32	0.32	-1.13	7.06e-02	-0.88	-0.55
36	20	4302	2.26	-3.07	-2.41	1.60	-1.75	0.16	-1.42	-0.18	-1.08	-0.65
36	20	4303	2.26	-2.91	-2.15	1.50	-1.82	-0.24	-1.27	-0.42	-1.09	-0.39
36	20	4304	2.30	-2.87	-2.04	1.48	-1.89	-0.47	-1.12	-0.52	-1.07	-0.17
36	20	4305	2.28	-2.82	-1.90	1.37	-1.96	-0.56	-1.02	-0.56	-1.02	2.44e-02

36	20	4306	2.12	-2.69	-1.66	1.09	-1.97	-0.42	-1.10	-0.53	-1.00	0.24
36	20	4307	1.74	-2.44	-1.31	0.61	-1.85	-0.14	-1.21	-0.39	-0.96	0.46
36	20	4308	1.20	-2.00	-0.89	8.33e-02	-1.52	0.39	-1.35	-1.92e-02	-0.94	0.74
36	20	4309	0.49	-1.15	-0.46	-0.20	-0.81	0.59	-1.26	9.78e-02	-0.77	0.82
36	20	4310	0.14	-0.36	-6.83e-02	-0.15	-0.24	0.51	-1.45	2.34e-02	-0.96	0.85
36	20	4311	0.19	-0.64	0.16	-0.60	-0.16	0.73	-1.26	-4.13e-02	-0.49	0.97
36	20	4312	6.51	-0.80	-0.77	6.48	-0.52	-0.43	-4.57	-0.45	-4.55	-0.31
36	20	4313	10.40	-0.32	0.33	9.75	-2.56	-0.44	-4.06	-0.58	-3.92	-0.69
36	20	4314	7.33	-2.04	1.06	4.23	-4.41	-0.34	-3.53	-0.65	-3.23	-0.94
36	20	4315	6.73	-1.11	2.47	3.15	-3.91	-0.30	-2.53	-0.42	-2.41	-0.50
36	20	4316	5.99	-0.71	2.71	2.57	-3.35	-0.43	-2.06	-0.45	-2.04	-0.18
36	20	4317	5.46	-0.33	2.90	2.23	-2.87	-0.58	-1.91	-0.59	-1.90	0.12
36	20	4318	5.04	0.11	3.10	2.05	-2.41	-0.50	-1.95	-0.56	-1.90	0.28
36	20	4319	4.67	0.51	3.33	1.86	-1.94	-0.29	-2.04	-0.40	-1.93	0.42
36	20	4320	4.36	0.96	3.57	1.74	-1.43	2.31e-02	-2.27	-0.12	-2.12	0.56
36	20	4321	4.09	1.55	3.84	1.80	-0.75	9.07e-02	-2.69	-6.58e-02	-2.54	0.64
36	20	4322	3.57	2.28	3.57	2.29	-4.18e-02	-0.51	-3.47	-0.70	-3.28	0.72
36	20	4323	7.35	3.48	3.90	6.92	-1.20	-1.18	-3.39	-1.18	-3.39	7.13e-02
36	20	4324	5.47	0.89	3.96	2.40	-2.16	-0.69	-3.38	-0.86	-3.21	-0.64
36	20	4325	5.31	1.59	4.87	2.03	-1.20	-0.17	-2.55	-0.28	-2.44	-0.50
36	20	4326	4.87	1.83	4.74	1.95	-0.61	-0.19	-2.06	-0.24	-2.01	-0.30
36	20	4327	4.60	1.95	4.59	1.96	-0.12	-0.47	-1.82	-0.48	-1.81	-9.70e-02
36	20	4328	4.56	1.94	4.47	2.03	0.49	-0.58	-1.77	-0.60	-1.75	0.14
36	20	4329	4.68	1.70	4.35	2.02	0.93	-0.57	-1.77	-0.62	-1.72	0.25
36	20	4330	4.77	1.48	4.23	2.03	1.22	-0.43	-1.87	-0.54	-1.76	0.39
36	20	4331	4.90	1.17	4.12	1.95	1.52	-0.20	-1.97	-0.36	-1.81	0.51
36	20	4332	5.07	0.86	4.02	1.91	1.82	0.12	-2.19	-6.37e-02	-2.00	0.63
36	20	4333	5.40	0.54	3.94	2.01	2.23	0.14	-2.60	-4.43e-02	-2.41	0.69
36	20	4334	5.65	0.17	3.33	2.49	2.70	-0.43	-3.35	-0.64	-3.13	0.76
36	20	4335	7.45	2.87	3.33	6.99	1.37	-1.10	-3.25	-1.10	-3.25	0.12
36	20	4336	3.13	2.50	3.06	2.57	0.19	-0.66	-3.23	-0.80	-3.09	-0.59
36	20	4337	4.20	1.57	3.65	2.12	1.07	-0.15	-2.44	-0.25	-2.34	-0.46
36	20	4338	4.46	0.80	3.25	2.00	1.72	-0.17	-1.97	-0.22	-1.93	-0.28
36	20	4339	4.46	0.37	2.85	1.98	2.00	-0.44	-1.74	-0.45	-1.74	-9.21e-02
36	20	4340	4.46	7.38e-02	2.50	2.03	2.18	-0.55	-1.70	-0.57	-1.68	0.14
36	20	4341	4.42	-0.22	2.18	2.01	2.32	-0.53	-1.70	-0.59	-1.65	0.25
36	20	4342	4.40	-0.49	1.90	2.01	2.44	-0.40	-1.80	-0.52	-1.68	0.39
36	20	4343	4.35	-0.76	1.66	1.93	2.55	-0.18	-1.89	-0.34	-1.73	0.50
36	20	4344	4.34	-1.00	1.46	1.87	2.66	0.13	-2.10	-5.03e-02	-1.91	0.62
36	20	4345	4.50	-1.21	1.32	1.96	2.84	0.15	-2.48	-3.71e-02	-2.30	0.67
36	20	4346	4.76	-1.64	0.68	2.44	3.07	-0.39	-3.19	-0.60	-2.99	0.73
36	20	4347	7.22	0.16	0.57	6.81	1.65	-1.02	-3.10	-1.03	-3.09	0.11
36	20	4348	2.56	3.61e-02	0.10	2.49	0.40	-0.60	-3.07	-0.74	-2.94	-0.57
36	20	4349	2.60	0.37	0.94	2.03	0.97	-0.11	-2.32	-0.20	-2.22	-0.46
36	20	4350	2.78	-0.10	0.74	1.94	1.31	-0.14	-1.87	-0.19	-1.82	-0.29
36	20	4351	2.85	-0.23	0.67	1.95	1.40	-0.41	-1.65	-0.42	-1.64	-9.64e-02
36	20	4352	2.74	-0.81	-0.11	2.04	1.41	-0.52	-1.60	-0.54	-1.58	0.13
36	20	4353	2.58	-1.47	-0.93	2.04	1.38	-0.51	-1.60	-0.56	-1.55	0.23
36	20	4354	2.55	-1.57	-1.07	2.05	1.34	-0.38	-1.69	-0.49	-1.58	0.36
36	20	4355	2.43	-1.63	-1.17	1.98	1.28	-0.17	-1.78	-0.33	-1.63	0.48
36	20	4356	2.34	-1.64	-1.23	1.93	1.21	0.13	-1.98	-5.45e-02	-1.80	0.60
36	20	4357	2.42	-1.64	-1.26	2.04	1.19	0.15	-2.35	-3.59e-02	-2.16	0.66
36	20	4358	2.89	-2.04	-1.69	2.54	1.27	-0.36	-3.04	-0.57	-2.83	0.72
36	20	4359	6.78	-1.60	-1.57	6.76	-0.43	-0.97	-2.94	-0.98	-2.93	0.15
36	20	4360	3.38	-2.50	-1.69	2.56	-2.03	-0.59	-2.90	-0.71	-2.79	-0.50
36	20	4361	2.96	-1.81	-0.99	2.15	-1.79	-0.11	-2.19	-0.19	-2.11	-0.39
36	20	4362	2.86	-1.97	-1.21	2.09	-1.77	-0.13	-1.76	-0.16	-1.73	-0.23
36	20	4363	2.91	-2.24	-1.40	2.08	-1.90	-0.35	-1.55	-0.35	-1.55	-6.84e-02
36	20	4364	2.94	-2.47	-1.51	1.97	-2.07	-0.40	-1.50	-0.42	-1.49	0.11
36	20	4365	2.73	-2.65	-1.49	1.58	-2.21	-0.32	-1.50	-0.36	-1.46	0.21
36	20	4366	2.30	-2.72	-1.34	0.92	-2.24	9.14e-03	-1.62	-7.23e-02	-1.54	0.35
36	20	4367	1.78	-2.50	-1.02	0.29	-2.04	0.21	-1.90	8.98e-02	-1.77	0.50
36	20	4368	0.29	-2.08	-0.85	-0.94	-1.19	0.12	-2.55	-0.11	-2.32	0.75
36	20	4369	1.17	-0.92	-0.61	0.87	-0.74	-1.82e-02	-2.86	-0.17	-2.71	0.63
36	20	4370	-0.64	-3.37	-1.05	-2.97	-0.97	-2.87e-02	-3.13	-8.96e-02	-3.07	0.43
36	20	4579	9.56	-0.75	-0.72	9.53	0.58	-1.52	-6.67	-1.53	-6.66	0.22
36	20	4580	9.29	6.17e-02	1.19	8.16	-3.02	-1.88	-7.20	-1.88	-7.20	0.17
36	20	4581	9.07	-1.84	2.65	4.58	-5.37	-0.83	-4.46	-0.83	-4.46	5.18e-02
36	20	4582	6.81	-1.16	2.34	3.31	-3.95	-4.93e-02	-2.82	-5.44e-02	-2.82	0.12
36	20	4583	6.04	-1.02	2.19	2.83	-3.52	-0.39	-2.70	-0.40	-2.69	0.17
36	20	4584	5.41	-0.65	2.20	2.56	-3.03	-0.43	-2.21	-0.44	-2.21	9.18e-02
36	20	4585	4.85	-0.30	2.23	2.31	-2.58	-0.49	-2.53	-0.53	-2.49	0.26
36	20	4586	4.32	5.75e-02	2.26	2.11	-2.13	-0.34	-2.26	-0.36	-2.25	0.15
36	20	4587	3.70	0.47	2.27	1.90	-1.60	-0.25	-2.82	-0.27	-2.79	0.26
36	20	4588	2.96	0.95	2.18	1.72	-0.98	-1.50e-02	-2.92	-1.51e-02	-2.92	-2.11e-02
36	20	4589	2.69	1.29	1.53	2.45	0.53	-0.92	-4.26	-0.92	-4.26	0.10
36	20	4590	5.32	2.40	3.05	4.67	-1.22	-2.52	-6.53	-2.52	-6.53	6.58e-02
36	20	4591	5.92	0.20	4.03	2.08	-2.69	-1.28	-4.37	-1.28	-4.37	4.48e-02
36	20	4592	3.90	1.36	3.40	1.86	-1.01	-4.18e-02	-2.83	-4.63e-02	-2.83	0.11

36	20	4593	3.32	1.76	3.06	2.02	-0.58	-0.27	-2.59	-0.28	-2.58	0.17
36	20	4594	2.94	2.20	2.94	2.20	-3.06e-02	-0.36	-2.06	-0.37	-2.06	6.45e-02
36	20	4595	3.23	1.92	2.87	2.28	0.59	-0.51	-2.28	-0.53	-2.26	0.18
36	20	4596	3.61	1.53	2.80	2.34	1.01	-0.49	-1.99	-0.50	-1.98	0.14
36	20	4597	3.84	1.18	2.72	2.31	1.31	-0.46	-2.34	-0.51	-2.28	0.32
36	20	4598	4.04	0.83	2.62	2.25	1.60	-0.29	-2.12	-0.33	-2.09	0.24
36	20	4599	4.24	0.40	2.49	2.14	1.91	-0.20	-2.67	-0.24	-2.62	0.32
36	20	4600	4.40	-0.14	2.25	2.01	2.27	1.05e-02	-2.77	8.22e-03	-2.77	7.93e-02
36	20	4601	5.68	-1.46	1.47	2.75	3.52	-0.85	-4.06	-0.86	-4.06	0.12
36	20	4602	5.78	1.94	2.84	4.88	1.63	-2.40	-6.26	-2.40	-6.26	9.53e-02
36	20	4603	3.61	2.34	3.61	2.34	1.41e-03	-1.22	-4.20	-1.22	-4.20	6.69e-02
36	20	4604	4.07	0.83	2.83	2.07	1.58	-2.89e-02	-2.72	-3.34e-02	-2.72	0.11
36	20	4605	4.28	0.26	2.35	2.20	2.01	-0.25	-2.49	-0.26	-2.48	0.18
36	20	4606	4.48	-5.95e-02	2.09	2.33	2.27	-0.34	-1.98	-0.34	-1.98	6.80e-02
36	20	4607	4.57	-0.29	1.89	2.40	2.42	-0.48	-2.18	-0.50	-2.16	0.19
36	20	4608	4.65	-0.51	1.71	2.43	2.55	-0.46	-1.91	-0.47	-1.89	0.14
36	20	4609	4.67	-0.73	1.52	2.41	2.66	-0.42	-2.24	-0.48	-2.18	0.32
36	20	4610	4.63	-0.94	1.34	2.36	2.74	-0.27	-2.03	-0.30	-1.99	0.24
36	20	4611	4.60	-1.20	1.13	2.27	2.84	-0.17	-2.55	-0.22	-2.50	0.32
36	20	4612	4.53	-1.51	0.88	2.15	2.95	2.09e-02	-2.64	1.85e-02	-2.64	8.03e-02
36	20	4613	5.56	-2.82	-0.12	2.86	3.92	-0.79	-3.87	-0.80	-3.86	0.12
36	20	4614	5.73	0.43	1.23	4.93	1.90	-2.27	-5.96	-2.27	-5.96	9.16e-02
36	20	4615	2.49	1.99	2.06	2.42	0.17	-1.16	-4.00	-1.16	-4.00	6.04e-02
36	20	4616	3.23	0.19	1.29	2.14	1.46	-9.83e-03	-2.58	-1.46e-02	-2.58	0.11
36	20	4617	3.31	-0.22	0.81	2.28	1.60	-0.22	-2.35	-0.23	-2.34	0.17
36	20	4618	3.41	-0.36	0.62	2.43	1.65	-0.31	-1.86	-0.31	-1.86	6.66e-02
36	20	4619	3.40	-0.43	0.44	2.53	1.60	-0.44	-2.05	-0.46	-2.03	0.18
36	20	4620	3.32	-0.66	7.52e-02	2.59	1.54	-0.42	-1.79	-0.44	-1.77	0.13
36	20	4621	3.24	-0.68	-2.02e-02	2.58	1.47	-0.39	-2.10	-0.45	-2.04	0.30
36	20	4622	3.11	-0.68	-0.11	2.53	1.36	-0.25	-1.90	-0.28	-1.87	0.23
36	20	4623	2.94	-0.93	-0.45	2.46	1.27	-0.15	-2.39	-0.20	-2.35	0.31
36	20	4624	2.79	-1.11	-0.68	2.36	1.22	2.70e-02	-2.49	2.41e-02	-2.48	8.51e-02
36	20	4625	3.82	-2.21	-1.48	3.10	1.96	-0.74	-3.65	-0.75	-3.65	0.12
36	20	4626	5.14	-0.14	-0.12	5.13	-0.31	-2.16	-5.67	-2.16	-5.66	0.11
36	20	4627	4.30	-0.79	0.82	2.69	-2.37	-1.10	-3.82	-1.11	-3.81	8.78e-02
36	20	4628	3.12	-0.68	-1.47e-02	2.45	-1.45	-7.68e-03	-2.47	-1.16e-02	-2.47	9.83e-02
36	20	4629	3.24	-1.22	-0.57	2.59	-1.57	-0.20	-2.27	-0.22	-2.26	0.17
36	20	4630	3.39	-1.59	-0.86	2.66	-1.76	-0.27	-1.79	-0.27	-1.79	5.85e-02
36	20	4631	3.43	-1.99	-1.09	2.53	-2.02	-0.37	-1.98	-0.39	-1.96	0.16
36	20	4632	3.22	-2.40	-1.27	2.09	-2.25	-0.27	-1.70	-0.28	-1.70	7.56e-02
36	20	4633	2.66	-2.79	-1.38	1.25	-2.39	-0.17	-2.06	-0.19	-2.04	0.19
36	20	4634	1.78	-3.14	-1.43	7.38e-02	-2.34	0.14	-2.05	0.14	-2.05	-3.58e-02
36	20	4635	-0.69	-2.88	-1.65	-1.92	-1.09	-8.02e-02	-3.02	-8.22e-02	-3.02	7.71e-02
36	20	4636	-0.44	-3.13	-0.71	-2.86	-0.80	-1.01	-5.00	-1.01	-5.00	7.49e-02
36	20	4637	0.37	-6.64	-7.85e-02	-6.19	-1.72	-1.18	-4.73	-1.19	-4.72	-0.15
36	20	4638	10.42	0.59	0.70	10.31	1.06	-1.37	-5.56	-1.37	-5.56	0.13
36	20	4639	3.89	-1.62	0.70	1.57	-2.72	-1.62	-6.08	-1.65	-6.05	0.34
36	20	4640	9.09	-1.58	2.74	4.78	-5.24	-0.67	-4.13	-0.77	-4.02	0.60
36	20	4641	7.13	-1.03	2.23	3.86	-4.00	-5.75e-02	-2.87	-7.29e-02	-2.86	0.21
36	20	4642	5.91	-1.16	2.11	2.64	-3.52	-0.41	-2.85	-0.42	-2.84	0.20
36	20	4643	5.99	-0.24	2.29	3.46	-3.06	-0.48	-2.58	-0.50	-2.56	0.16
36	20	4644	4.73	-0.52	2.09	2.12	-2.63	-0.55	-2.78	-0.57	-2.76	0.21
36	20	4645	4.83	0.46	2.31	2.97	-2.16	-0.42	-2.63	-0.43	-2.61	0.18
36	20	4646	3.57	0.30	2.13	1.74	-1.63	-0.31	-2.94	-0.31	-2.94	5.04e-02
36	20	4647	2.99	1.22	2.04	2.17	-0.88	-4.71e-02	-2.94	-4.73e-02	-2.94	-2.71e-02
36	20	4648	2.52	0.55	1.35	1.72	0.97	-0.81	-3.93	-0.85	-3.89	-0.34
36	20	4649	1.89	-2.15	1.81	-2.06	-0.58	-2.33	-5.77	-2.33	-5.77	3.95e-02
36	20	4650	5.31	-6.97e-02	3.91	1.33	-2.36	-1.12	-4.06	-1.21	-3.97	0.51
36	20	4651	3.74	1.73	3.17	2.29	-0.90	-2.00e-02	-2.80	-4.11e-02	-2.78	0.24
36	20	4652	3.02	1.79	2.89	1.92	-0.38	-0.29	-2.68	-0.30	-2.66	0.20
36	20	4653	3.20	2.85	2.95	3.10	0.16	-0.41	-2.36	-0.42	-2.35	0.13
36	20	4654	3.11	1.76	2.68	2.19	0.63	-0.55	-2.49	-0.56	-2.48	0.16
36	20	4655	4.05	2.05	2.83	3.27	0.97	-0.53	-2.33	-0.55	-2.31	0.18
36	20	4656	3.69	1.05	2.54	2.20	1.31	-0.51	-2.56	-0.55	-2.52	0.26
36	20	4657	4.50	1.33	2.65	3.18	1.56	-0.37	-2.44	-0.40	-2.42	0.22
36	20	4658	4.08	0.29	2.34	2.03	1.89	-0.27	-2.75	-0.27	-2.75	5.23e-02
36	20	4659	4.82	-0.14	2.14	2.55	2.47	-2.24e-02	-2.78	-2.26e-02	-2.78	-2.14e-02
36	20	4660	6.10	-2.15	1.29	2.65	4.07	-0.76	-3.73	-0.79	-3.70	-0.30
36	20	4661	2.89	-2.84	1.65	-1.60	2.36	-2.22	-5.53	-2.22	-5.52	6.68e-02
36	20	4662	3.74	2.15	3.54	2.35	0.53	-1.07	-3.91	-1.16	-3.81	0.51
36	20	4663	4.48	0.75	2.67	2.55	1.86	-7.72e-03	-2.69	-3.02e-02	-2.67	0.24
36	20	4664	4.33	-1.22e-02	2.25	2.07	2.17	-0.27	-2.57	-0.28	-2.56	0.20
36	20	4665	5.14	0.27	2.18	3.22	2.38	-0.38	-2.27	-0.39	-2.26	0.14
36	20	4666	4.56	-0.50	1.80	2.27	2.52	-0.52	-2.39	-0.53	-2.37	0.16
36	20	4667	5.33	-0.16	1.84	3.33	2.65	-0.50	-2.23	-0.52	-2.21	0.18
36	20	4668	4.64	-0.93	1.45	2.26	2.76	-0.48	-2.44	-0.51	-2.41	0.26
36	20	4669	5.35	-0.58	1.49	3.27	2.83	-0.35	-2.33	-0.37	-2.31	0.22
36	20	4670	4.57	-1.39	1.11	2.08	2.94	-0.25	-2.62	-0.25	-2.62	5.20e-02
36	20	4671	5.09	-1.57	0.83	2.70	3.19	-1.12e-02	-2.65	-1.14e-02	-2.65	2.40e-02

36	20	4672	6.00	-3.39	-6.78e-02	2.68	4.49	-0.71	-3.55	-0.74	-3.52	-0.28
36	20	4673	2.25	-3.30	0.29	-1.34	2.65	-2.10	-5.26	-2.10	-5.26	6.31e-02
36	20	4674	2.87	1.59	2.10	2.36	0.63	-1.01	-3.72	-1.10	-3.63	0.48
36	20	4675	3.72	0.13	1.27	2.58	1.67	1.55e-03	-2.54	-1.31e-02	-2.53	0.19
36	20	4676	3.35	-0.41	0.84	2.10	1.77	-0.24	-2.42	-0.26	-2.41	0.19
36	20	4677	4.18	-0.19	0.69	3.29	1.75	-0.35	-2.13	-0.36	-2.12	0.13
36	20	4678	3.31	-0.59	0.38	2.34	1.68	-0.48	-2.23	-0.49	-2.22	0.15
36	20	4679	4.16	-0.23	0.47	3.46	1.60	-0.46	-2.08	-0.48	-2.06	0.17
36	20	4680	3.11	-0.75	-1.09e-02	2.38	1.52	-0.44	-2.28	-0.48	-2.25	0.25
36	20	4681	3.92	-0.46	5.58e-02	3.40	1.41	-0.32	-2.18	-0.34	-2.16	0.21
36	20	4682	2.83	-0.81	-0.23	2.26	1.33	-0.22	-2.46	-0.22	-2.45	0.13
36	20	4683	3.42	-1.00	-0.46	2.89	1.44	-1.22e-03	-2.49	-1.46e-03	-2.49	2.43e-02
36	20	4684	4.04	-2.57	-1.44	2.90	2.49	-0.67	-3.35	-0.69	-3.32	-0.25
36	20	4685	-0.55	-1.35	-1.03	-0.86	0.39	-1.99	-5.00	-2.00	-5.00	7.85e-02
36	20	4686	3.81	-0.26	0.91	2.64	-1.85	-0.96	-3.56	-1.05	-3.47	0.48
36	20	4687	3.42	-0.40	4.62e-03	3.02	-1.17	7.86e-03	-2.46	-1.49e-02	-2.44	0.24
36	20	4688	2.90	-1.00	-0.54	2.43	-1.26	-0.22	-2.36	-0.24	-2.34	0.20
36	20	4689	4.13	-1.10	-0.62	3.65	-1.51	-0.32	-2.08	-0.33	-2.07	0.13
36	20	4690	3.05	-1.77	-1.09	2.37	-1.68	-0.41	-2.19	-0.42	-2.17	0.14
36	20	4691	3.80	-1.84	-1.07	3.03	-1.94	-0.32	-2.01	-0.33	-2.00	0.13
36	20	4692	2.55	-2.83	-1.40	1.12	-2.38	-0.21	-2.18	-0.21	-2.18	4.50e-02
36	20	4693	1.91	-3.02	-1.39	0.27	-2.32	0.11	-2.11	0.11	-2.11	-3.40e-02
36	20	4694	-0.90	-3.18	-1.76	-2.32	-1.10	1.29e-02	-2.75	-1.96e-02	-2.72	-0.30
36	20	4695	-1.11	-8.38	-1.15	-8.34	-0.56	-0.83	-4.23	-0.84	-4.22	-0.18
36	20	4696	0.32	-8.62	0.11	-8.41	-1.35	-0.99	-4.02	-1.00	-4.00	0.21
36	20	4697	8.01	0.85	0.91	7.95	0.66	0.74	-1.61	0.68	-1.54	0.39
36	20	4698	3.78	-0.13	1.15	2.50	-1.84	0.36	-1.68	0.18	-1.50	0.58
36	20	4699	5.84	-1.58	0.72	3.54	-3.43	-0.18	-2.22	-0.44	-1.96	0.69
36	20	4700	4.44	-0.96	1.08	2.40	-2.62	-0.37	-2.29	-0.50	-2.16	0.48
36	20	4701	3.25	-0.53	1.15	1.57	-1.88	-0.35	-2.09	-0.37	-2.06	0.21
36	20	4702	3.33	0.12	1.24	2.20	-1.53	-0.47	-2.23	-0.51	-2.19	0.26
36	20	4703	2.11	0.14	0.99	1.26	-0.98	-0.48	-2.15	-0.49	-2.13	0.17
36	20	4704	2.02	0.83	1.05	1.79	-0.46	-0.49	-2.29	-0.52	-2.26	0.24
36	20	4705	0.81	0.26	0.81	0.26	3.97e-03	-0.27	-2.15	-0.28	-2.15	-1.76e-02
36	20	4706	2.01	-5.58e-02	0.81	1.14	1.02	-0.45	-2.22	-0.46	-2.21	-0.13
36	20	4707	3.10	-1.69	1.68	-0.28	2.19	-0.45	-2.11	-0.54	-2.02	-0.38
36	20	4708	1.35	-3.04	1.16	-2.85	0.88	-0.37	-1.63	-0.38	-1.61	0.12
36	20	4709	0.86	-0.17	0.69	7.86e-03	-0.39	-0.36	-2.15	-0.59	-1.91	0.60
36	20	4710	1.85	0.24	0.88	1.21	0.79	-0.27	-2.14	-0.41	-2.00	0.50
36	20	4711	2.48	-0.78	0.96	0.74	1.63	-0.30	-1.93	-0.33	-1.90	0.22
36	20	4712	3.49	-0.56	1.07	1.86	1.99	-0.46	-2.03	-0.50	-1.99	0.25
36	20	4713	3.45	-1.27	0.91	1.27	2.35	-0.46	-1.91	-0.48	-1.89	0.15
36	20	4714	4.22	-1.18	1.08	1.96	2.67	-0.45	-2.02	-0.50	-1.98	0.27
36	20	4715	4.13	-1.94	0.90	1.29	3.03	-0.46	-1.97	-0.49	-1.94	0.20
36	20	4716	4.84	-1.83	1.03	1.97	3.30	-0.45	-2.13	-0.50	-2.09	0.28
36	20	4717	4.62	-2.59	0.87	1.16	3.60	-0.24	-2.01	-0.25	-2.00	9.50e-02
36	20	4718	5.61	-3.17	0.92	1.52	4.38	-0.44	-2.10	-0.45	-2.09	-0.13
36	20	4719	6.68	-4.02	1.85	0.81	5.32	-0.43	-2.00	-0.51	-1.92	-0.34
36	20	4720	3.91	-4.98	1.28	-2.34	4.06	-0.34	-1.56	-0.36	-1.54	0.14
36	20	4721	3.39	-1.98	0.82	0.59	2.68	-0.33	-2.08	-0.57	-1.84	0.60
36	20	4722	4.74	-2.19	1.03	1.52	3.46	-0.25	-2.07	-0.40	-1.92	0.50
36	20	4723	5.15	-2.83	1.07	1.25	3.99	-0.19	-1.85	-0.22	-1.82	0.23
36	20	4724	5.77	-2.53	1.17	2.07	4.12	-0.45	-1.95	-0.49	-1.91	0.26
36	20	4725	5.49	-3.10	0.98	1.41	4.29	-0.45	-1.83	-0.47	-1.81	0.16
36	20	4726	6.06	-2.80	1.12	2.14	4.40	-0.43	-1.94	-0.48	-1.89	0.27
36	20	4727	5.70	-3.36	0.93	1.41	4.52	-0.45	-1.88	-0.48	-1.85	0.20
36	20	4728	6.25	-3.03	1.04	2.18	4.60	-0.43	-2.04	-0.48	-1.99	0.28
36	20	4729	5.75	-3.61	0.85	1.28	4.67	-0.23	-1.92	-0.23	-1.91	0.10
36	20	4730	6.45	-3.81	0.88	1.77	5.11	-0.43	-1.99	-0.43	-1.99	-3.62e-02
36	20	4731	7.17	-4.42	1.77	0.98	5.78	-0.41	-1.90	-0.48	-1.83	-0.31
36	20	4732	4.25	-4.99	1.21	-1.95	4.34	-0.32	-1.48	-0.34	-1.47	0.14
36	20	4733	3.45	-2.05	0.71	0.69	2.75	-0.31	-1.97	-0.54	-1.74	0.57
36	20	4734	4.61	-2.00	0.92	1.69	3.28	-0.22	-1.96	-0.37	-1.81	0.48
36	20	4735	4.76	-2.45	0.94	1.37	3.60	-0.17	-1.74	-0.20	-1.71	0.22
36	20	4736	5.17	-1.92	1.02	2.24	3.49	-0.32	-1.83	-0.36	-1.79	0.25
36	20	4737	4.86	-2.11	0.80	1.95	3.43	-0.34	-1.71	-0.35	-1.69	0.15
36	20	4738	5.02	-1.80	0.92	2.30	3.34	-0.42	-1.81	-0.47	-1.76	0.26
36	20	4739	4.65	-1.96	0.69	1.99	3.24	-0.33	-1.75	-0.36	-1.73	0.19
36	20	4740	4.81	-1.67	0.78	2.36	3.14	-0.31	-1.90	-0.36	-1.85	0.27
36	20	4741	4.07	-2.04	0.55	1.48	3.02	-0.20	-1.79	-0.20	-1.78	9.71e-02
36	20	4742	4.67	-2.09	0.55	2.04	3.30	-0.31	-1.86	-0.31	-1.86	-3.23e-02
36	20	4743	5.02	-2.52	1.20	1.30	3.77	-0.38	-1.78	-0.44	-1.72	-0.29
36	20	4744	1.95	-2.70	0.66	-1.42	2.08	-0.30	-1.41	-0.32	-1.39	0.15
36	20	4745	1.25	-2.89e-02	6.79e-02	1.16	0.34	-0.30	-1.89	-0.52	-1.67	0.55
36	20	4746	2.20	-4.59e-03	0.16	2.03	0.58	-0.21	-1.90	-0.35	-1.76	0.47
36	20	4747	2.28	-0.25	-1.16e-02	2.04	0.74	-0.16	-1.71	-0.20	-1.68	0.22
36	20	4748	2.59	-0.18	-0.12	2.53	0.41	-0.31	-1.81	-0.35	-1.77	0.24
36	20	4749	1.97	-0.58	-0.56	1.95	0.23	-0.32	-1.69	-0.33	-1.68	0.14
36	20	4750	2.16	-0.65	-0.65	2.15	-9.53e-02	-0.30	-1.77	-0.33	-1.74	0.21

36	20	4751	0.70	-1.25	-0.96	0.41	-0.69	-0.16	-1.62	-0.17	-1.62	7.45e-02
36	20	4752	0.33	-1.29	-0.92	-4.15e-02	-0.68	-0.16	-1.63	-0.16	-1.63	-3.44e-02
36	20	4753	0.33	-3.34	0.23	-3.24	-0.60	4.33e-02	-1.48	-2.52e-02	-1.41	-0.32
36	20	4754	-0.29	-8.96	-0.29	-8.96	-0.21	0.59	-1.08	0.55	-1.04	-0.25
36	20	4755	0.48	-10.38	0.46	-10.36	-0.43	0.47	-1.22	0.44	-1.20	-0.20
36	20	4756	6.37	-9.30e-02	-4.07e-02	6.32	0.58	0.86	-7.39e-02	0.34	0.45	0.46
36	20	4757	3.82	0.24	0.37	3.70	-0.65	0.35	-0.16	-4.00e-02	0.23	0.22
36	20	4758	3.02	0.12	0.60	2.54	-1.07	-3.69e-02	-0.32	-0.13	-0.23	0.13
36	20	4759	0.28	-0.20	0.24	-0.16	-0.13	-0.14	-0.64	-0.25	-0.52	0.21
36	20	4760	1.36	-0.45	0.14	0.77	0.85	-0.19	-0.77	-0.26	-0.69	0.20
36	20	4761	0.88	-1.63	-0.30	-0.45	1.25	-0.14	-0.68	-0.18	-0.64	0.15
36	20	4762	1.73	-1.92	-0.14	-5.53e-02	1.82	-0.14	-0.80	-0.21	-0.73	0.19
36	20	4763	1.58	-3.09	-0.74	-0.77	2.33	-0.13	-0.71	-0.18	-0.66	0.16
36	20	4764	2.39	-3.13	-0.61	-0.14	2.75	-0.14	-0.78	-0.20	-0.72	0.19
36	20	4765	2.83	-4.41	-0.69	-0.89	3.62	-0.22	-0.55	-0.22	-0.54	3.20e-02
36	20	4766	3.35	-4.94	-0.65	-0.95	4.14	0.13	-0.39	-1.65e-02	-0.25	0.23
36	20	4767	2.12	-4.67	-0.40	-2.15	3.28	0.25	-1.31e-02	0.14	9.77e-02	0.13
36	20	4768	2.30	-3.10	-0.17	-0.63	2.69	8.53e-02	-0.27	-1.84e-02	-0.17	0.16
36	20	4769	2.78	-4.31	-0.98	-0.55	3.54	-6.67e-02	-0.61	-0.22	-0.46	0.25
36	20	4770	3.76	-4.93	-1.03	-0.14	4.32	-6.52e-02	-0.70	-0.15	-0.62	0.21
36	20	4771	3.81	-5.51	-1.16	-0.54	4.65	-0.14	-0.63	-0.20	-0.57	0.16
36	20	4772	4.48	-5.65	-1.03	-0.14	5.04	-0.13	-0.73	-0.21	-0.64	0.21
36	20	4773	4.53	-6.23	-1.17	-0.53	5.37	-0.13	-0.64	-0.19	-0.58	0.17
36	20	4774	5.15	-6.29	-1.03	-0.11	5.70	-0.13	-0.75	-0.21	-0.66	0.21
36	20	4775	5.19	-6.88	-1.16	-0.53	6.03	-0.12	-0.67	-0.18	-0.61	0.17
36	20	4776	5.76	-6.87	-1.02	-8.23e-02	6.30	-0.12	-0.75	-0.20	-0.67	0.21
36	20	4777	6.25	-7.50	-0.70	-0.56	6.87	-0.20	-0.53	-0.22	-0.51	7.79e-02
36	20	4778	6.42	-8.02	-1.00	-0.60	7.22	0.15	-0.39	-1.24e-02	-0.23	0.25
36	20	4779	5.65	-7.27	0.12	-1.74	6.39	0.26	-2.09e-02	0.14	9.63e-02	0.14
36	20	4780	5.66	-5.61	0.39	-0.34	5.63	0.10	-0.28	-1.61e-02	-0.16	0.18
36	20	4781	5.45	-6.72	-0.99	-0.28	6.07	-5.26e-02	-0.61	-0.22	-0.44	0.26
36	20	4782	6.00	-7.27	-1.06	-0.21	6.63	-4.51e-02	-0.68	-0.14	-0.59	0.22
36	20	4783	6.05	-7.50	-1.18	-0.27	6.76	-3.76e-02	-0.60	-9.63e-02	-0.55	0.17
36	20	4784	6.86	-7.04	-0.45	0.27	6.94	-0.11	-0.71	-0.21	-0.61	0.22
36	20	4785	6.67	-7.42	-0.46	-0.29	7.04	-0.11	-0.62	-0.19	-0.55	0.18
36	20	4786	7.45	-6.86	0.30	0.29	7.16	-0.11	-0.72	-0.20	-0.63	0.22
36	20	4787	6.87	-7.62	-0.43	-0.33	7.25	-0.11	-0.65	-0.18	-0.58	0.18
36	20	4788	7.41	-7.18	0.38	-0.16	7.29	-0.11	-0.73	-0.20	-0.64	0.21
36	20	4789	7.71	-7.55	0.56	-0.39	7.61	-0.20	-0.51	-0.22	-0.49	8.07e-02
36	20	4790	7.83	-7.61	0.57	-0.36	7.70	0.16	-0.39	-7.18e-03	-0.22	0.25
36	20	4791	6.51	-7.04	0.87	-1.40	6.68	0.26	-2.06e-02	0.14	9.48e-02	0.14
36	20	4792	6.08	-5.35	0.90	-0.17	5.69	0.12	-0.27	-5.46e-03	-0.15	0.18
36	20	4793	6.09	-5.76	0.43	-0.11	5.92	-3.97e-02	-0.58	-0.21	-0.41	0.25
36	20	4794	6.85	-5.67	0.50	0.68	6.26	-2.40e-02	-0.64	-0.12	-0.55	0.22
36	20	4795	6.37	-5.97	0.54	-0.15	6.16	-2.32e-02	-0.57	-8.22e-02	-0.51	0.17
36	20	4796	6.98	-5.26	0.57	1.15	6.12	-0.10	-0.67	-0.20	-0.57	0.21
36	20	4797	6.20	-5.86	0.56	-0.22	6.02	-0.11	-0.58	-0.18	-0.51	0.17
36	20	4798	7.10	-4.74	1.18	1.18	5.92	-0.10	-0.68	-0.20	-0.58	0.21
36	20	4799	6.05	-5.62	0.57	-0.14	5.82	-0.10	-0.60	-0.17	-0.53	0.17
36	20	4800	6.65	-4.71	1.17	0.77	5.68	-9.92e-02	-0.67	-0.19	-0.59	0.21
36	20	4801	6.16	-5.50	0.74	-8.67e-02	5.82	-0.18	-0.47	-0.20	-0.45	7.60e-02
36	20	4802	6.56	-5.06	1.63	-0.13	5.74	0.16	-0.36	1.99e-03	-0.20	0.24
36	20	4803	4.58	-4.65	0.91	-0.98	4.52	0.25	-1.90e-02	0.13	9.32e-02	0.13
36	20	4804	4.09	-2.83	1.44	-0.19	3.36	0.11	-0.25	-3.04e-03	-0.14	0.17
36	20	4805	3.75	-3.10	0.73	-7.68e-02	3.40	-4.29e-02	-0.55	-0.20	-0.40	0.24
36	20	4806	4.65	-2.55	0.55	1.54	3.56	-2.59e-02	-0.63	-0.11	-0.54	0.21
36	20	4807	3.11	-3.34	-0.15	-8.01e-02	3.23	-2.14e-02	-0.55	-7.29e-02	-0.50	0.16
36	20	4808	3.61	-2.31	0.12	1.18	2.91	-0.11	-0.66	-0.19	-0.57	0.20
36	20	4809	2.22	-2.78	-0.40	-0.16	2.50	-8.71e-02	-0.56	-0.14	-0.50	0.15
36	20	4810	1.66	-2.33	-0.52	-0.16	1.99	-8.35e-02	-0.62	-0.16	-0.54	0.19
36	20	4811	0.63	-2.76	-0.54	-1.58	1.61	-7.42e-02	-0.41	-8.89e-02	-0.40	6.86e-02
36	20	4812	-0.34	-3.90	-0.49	-3.75	0.71	0.19	-0.27	0.11	-0.20	0.16
36	20	4813	-0.42	-7.39	-0.48	-7.34	0.60	0.36	0.13	0.34	0.15	-6.54e-02
36	20	4814	-8.14e-02	-10.42	-0.10	-10.40	0.46	0.42	-6.88e-02	0.16	0.20	-0.24
36	20	4815	4.90	6.37e-02	0.23	4.73	0.87	0.17	-0.10	-0.10	0.17	1.86e-02
36	20	4816	2.92	5.96e-02	6.43e-02	2.92	0.11	3.24e-02	-0.18	-0.18	2.93e-02	2.56e-02
36	20	4817	1.55	-0.41	-0.37	1.52	0.25	0.20	-0.12	-3.99e-02	0.11	0.14
36	20	4818	1.21	-1.92	-0.57	-0.15	1.55	0.16	-7.78e-02	-3.84e-02	0.13	8.94e-02
36	20	4819	2.10	-3.20	-0.85	-0.25	2.63	0.24	-0.16	-2.09e-02	9.72e-02	0.19
36	20	4820	2.16	-4.21	-1.23	-0.83	3.18	0.22	-7.68e-02	1.95e-02	0.12	0.14
36	20	4821	2.72	-4.62	-1.41	-0.49	3.64	0.27	-0.14	2.09e-02	0.11	0.20
36	20	4822	2.67	-5.54	-1.78	-1.09	4.10	0.22	-8.52e-02	1.84e-02	0.12	0.15
36	20	4823	3.27	-5.80	-1.90	-0.64	4.49	0.25	-0.17	-1.49e-02	9.27e-02	0.20
36	20	4824	3.55	-6.60	-2.00	-1.05	5.06	0.25	-0.13	-4.41e-03	0.13	0.18
36	20	4825	4.06	-6.95	-1.80	-1.09	5.49	0.32	-0.14	4.83e-02	0.14	0.23
36	20	4826	3.25	-6.98	-2.01	-1.72	5.11	0.19	-0.11	5.40e-02	3.00e-02	0.15
36	20	4827	3.18	-6.34	-2.17	-1.00	4.72	0.29	-9.69e-02	5.11e-02	0.14	0.19
36	20	4828	3.64	-6.81	-2.42	-0.74	5.16	0.19	-8.10e-02	-9.94e-03	0.12	0.12
36	20	4829	4.37	-7.33	-2.52	-0.43	5.75	0.25	-0.18	-1.76e-02	8.55e-02	0.21

36	20	4830	4.44	-7.91	-2.59	-0.88	6.12	0.22	-9.70e-02	1.44e-02	0.11	0.15
36	20	4831	5.14	-8.00	-2.45	-0.41	6.49	0.27	-0.16	1.37e-02	9.71e-02	0.21
36	20	4832	5.17	-8.53	-2.50	-0.87	6.80	0.22	-0.10	1.46e-02	0.11	0.16
36	20	4833	5.82	-8.50	-2.29	-0.39	7.10	0.28	-0.16	1.52e-02	9.89e-02	0.22
36	20	4834	5.85	-9.02	-2.29	-0.89	7.40	0.23	-0.10	1.86e-02	0.11	0.16
36	20	4835	6.49	-8.94	-2.05	-0.40	7.67	0.26	-0.19	-1.34e-02	8.72e-02	0.22
36	20	4836	6.73	-9.45	-1.92	-0.80	8.07	0.26	-0.14	-1.86e-03	0.12	0.19
36	20	4837	7.24	-9.50	-1.47	-0.78	8.36	0.34	-0.15	4.82e-02	0.14	0.24
36	20	4838	6.40	-9.30	-1.50	-1.40	7.85	0.20	-0.12	5.46e-02	2.99e-02	0.16
36	20	4839	6.23	-8.38	-1.46	-0.70	7.30	0.30	-0.11	5.08e-02	0.14	0.20
36	20	4840	6.55	-8.59	-1.53	-0.52	7.55	0.20	-9.30e-02	-9.13e-03	0.12	0.13
36	20	4841	7.09	-8.86	-1.51	-0.27	7.95	0.27	-0.19	-1.24e-02	8.59e-02	0.22
36	20	4842	7.05	-9.23	-1.58	-0.60	8.12	0.23	-0.10	2.25e-02	0.11	0.16
36	20	4843	7.46	-9.18	-1.44	-0.29	8.30	0.29	-0.17	2.16e-02	9.90e-02	0.23
36	20	4844	7.33	-9.48	-1.54	-0.60	8.39	0.24	-0.10	2.32e-02	0.11	0.16
36	20	4845	7.62	-9.36	-1.45	-0.29	8.47	0.29	-0.17	2.07e-02	9.76e-02	0.23
36	20	4846	7.44	-9.72	-1.59	-0.70	8.57	0.24	-0.11	2.10e-02	0.11	0.17
36	20	4847	7.70	-9.58	-1.59	-0.29	8.62	0.27	-0.19	-9.02e-03	8.37e-02	0.22
36	20	4848	8.70	-8.92	0.41	-0.63	8.80	0.26	-0.14	1.31e-03	0.12	0.20
36	20	4849	8.71	-9.05	0.22	-0.56	8.87	0.34	-0.16	4.87e-02	0.13	0.24
36	20	4850	7.82	-8.52	0.36	-1.06	8.14	0.21	-0.12	5.43e-02	3.10e-02	0.16
36	20	4851	7.35	-7.42	0.40	-0.47	7.37	0.31	-0.11	5.81e-02	0.14	0.21
36	20	4852	7.97	-6.97	1.27	-0.27	7.43	0.21	-7.93e-02	8.72e-03	0.12	0.13
36	20	4853	7.64	-7.63	0.37	-0.36	7.63	0.27	-0.18	-6.75e-04	9.26e-02	0.22
36	20	4854	7.67	-7.52	0.48	-0.33	7.59	0.23	-9.55e-02	2.67e-02	0.11	0.16
36	20	4855	8.84	-6.45	2.39	3.31e-03	7.55	0.29	-0.16	2.59e-02	0.10	0.22
36	20	4856	8.07	-6.95	1.46	-0.34	7.46	0.23	-9.40e-02	2.71e-02	0.11	0.16
36	20	4857	8.73	-6.20	2.53	3.80e-03	7.36	0.29	-0.16	2.74e-02	0.10	0.22
36	20	4858	8.50	-6.31	2.51	-0.33	7.27	0.24	-9.15e-02	3.10e-02	0.11	0.16
36	20	4859	8.58	-5.95	2.61	1.85e-02	7.15	0.27	-0.17	5.68e-03	9.49e-02	0.22
36	20	4860	8.51	-6.10	2.66	-0.24	7.16	0.26	-0.12	1.96e-02	0.12	0.18
36	20	4861	8.48	-6.07	2.87	-0.46	7.08	0.33	-0.14	5.27e-02	0.13	0.23
36	20	4862	7.43	-5.41	2.68	-0.65	6.20	0.19	-0.11	4.80e-02	3.16e-02	0.15
36	20	4863	6.49	-4.48	2.46	-0.46	5.29	0.29	-9.85e-02	5.85e-02	0.14	0.19
36	20	4864	6.31	-4.37	2.09	-0.16	5.22	0.20	-6.20e-02	1.88e-02	0.12	0.12
36	20	4865	6.52	-4.12	1.77	0.63	5.29	0.26	-0.16	5.92e-03	9.10e-02	0.21
36	20	4866	5.61	-4.57	1.39	-0.35	5.02	0.22	-8.27e-02	2.87e-02	0.11	0.15
36	20	4867	5.21	-4.23	0.62	0.36	4.72	0.27	-0.14	2.73e-02	9.59e-02	0.20
36	20	4868	4.18	-4.39	0.25	-0.46	4.27	0.22	-7.72e-02	3.90e-02	0.10	0.15
36	20	4869	3.61	-3.77	0.28	-0.45	3.67	0.25	-0.13	3.28e-02	8.61e-02	0.19
36	20	4870	2.17	-3.88	-2.65e-02	-1.69	2.91	0.25	-4.73e-02	8.99e-02	0.11	0.15
36	20	4871	0.73	-3.84	-3.45e-02	-3.08	1.71	0.24	-4.70e-02	0.11	8.32e-02	0.14
36	20	4872	5.67e-02	-5.79	-0.20	-5.54	1.20	0.11	-1.32e-02	8.56e-02	1.38e-02	5.17e-02
36	20	4873	-0.12	-7.69	-0.22	-7.59	0.86	7.76e-02	-3.36e-02	-2.59e-02	6.99e-02	2.82e-02
36	20	4874	2.57	-0.73	-0.31	2.14	1.10	2.14e-02	-4.94e-02	-6.00e-03	-2.20e-02	3.45e-02
36	20	4875	1.38	-0.67	-0.36	1.07	0.74	4.41e-02	-8.47e-02	-3.71e-02	-3.56e-03	6.22e-02
36	20	4876	1.42	-1.60	-0.73	0.55	1.37	0.11	-0.15	-3.32e-02	-3.41e-03	0.13
36	20	4877	2.17	-3.53	-1.33	-1.81e-02	2.77	0.11	-0.15	-2.78e-02	-9.26e-03	0.13
36	20	4878	2.65	-4.92	-1.89	-0.38	3.71	0.21	-0.16	-6.98e-04	4.65e-02	0.18
36	20	4879	2.79	-5.85	-2.41	-0.65	4.23	0.16	-0.15	-1.88e-03	5.82e-03	0.15
36	20	4880	3.00	-6.47	-2.79	-0.68	4.61	0.22	-0.16	1.04e-02	4.91e-02	0.19
36	20	4881	3.16	-7.06	-3.12	-0.79	4.98	0.15	-0.15	-3.59e-03	4.31e-03	0.15
36	20	4882	3.42	-7.49	-3.31	-0.77	5.30	0.22	-0.17	-4.71e-04	4.50e-02	0.19
36	20	4883	3.75	-7.98	-3.43	-0.80	5.71	0.16	-0.18	-1.65e-02	-5.79e-03	0.17
36	20	4884	3.94	-8.38	-3.47	-0.96	6.03	0.21	-0.21	3.39e-03	-4.90e-03	0.21
36	20	4885	3.42	-8.37	-3.57	-1.38	5.79	0.18	-0.15	2.80e-02	3.21e-03	0.16
36	20	4886	3.50	-8.04	-3.70	-0.84	5.59	0.18	-0.19	1.16e-03	-8.57e-03	0.19
36	20	4887	3.84	-8.48	-3.95	-0.70	5.94	0.14	-0.16	-1.73e-02	-5.36e-03	0.15
36	20	4888	4.27	-8.92	-4.05	-0.60	6.37	0.22	-0.19	-4.10e-03	3.70e-02	0.20
36	20	4889	4.50	-9.31	-4.10	-0.71	6.69	0.17	-0.17	-6.13e-03	3.31e-03	0.17
36	20	4890	4.91	-9.52	-4.03	-0.58	7.01	0.23	-0.19	4.18e-03	4.08e-02	0.21
36	20	4891	5.12	-9.76	-3.96	-0.69	7.26	0.17	-0.17	-3.08e-03	5.24e-03	0.17
36	20	4892	5.50	-9.84	-3.77	-0.57	7.50	0.23	-0.19	5.80e-03	4.25e-02	0.21
36	20	4893	5.76	-10.02	-3.59	-0.67	7.76	0.17	-0.17	-3.69e-03	3.65e-03	0.17
36	20	4894	6.17	-10.04	-3.31	-0.56	7.99	0.23	-0.19	-1.92e-04	4.06e-02	0.21
36	20	4895	6.54	-10.19	-3.02	-0.63	8.28	0.17	-0.19	-1.48e-02	-5.76e-03	0.18
36	20	4896	6.84	-10.26	-2.69	-0.72	8.49	0.23	-0.23	4.35e-03	-6.06e-03	0.23
36	20	4897	6.36	-9.97	-2.47	-1.15	8.14	0.19	-0.16	2.81e-02	1.95e-03	0.17
36	20	4898	6.41	-9.30	-2.29	-0.59	7.81	0.20	-0.20	2.15e-03	-9.33e-03	0.20
36	20	4899	6.69	-9.44	-2.27	-0.48	8.02	0.16	-0.18	-1.69e-02	-4.75e-03	0.17
36	20	4900	7.08	-9.60	-2.18	-0.34	8.29	0.24	-0.20	-6.45e-04	3.55e-02	0.22
36	20	4901	7.23	-9.75	-2.10	-0.43	8.45	0.18	-0.18	8.79e-04	5.22e-03	0.18
36	20	4902	7.49	-9.78	-1.97	-0.32	8.60	0.24	-0.19	9.39e-03	3.93e-02	0.22
36	20	4903	7.52	-9.87	-1.91	-0.45	8.66	0.18	-0.17	1.36e-03	6.40e-03	0.18
36	20	4904	7.63	-9.83	-1.86	-0.34	8.70	0.24	-0.19	8.62e-03	3.88e-02	0.22
36	20	4905	7.62	-9.98	-1.88	-0.48	8.77	0.17	-0.18	-2.82e-03	2.35e-05	0.17
36	20	4906	7.68	-10.02	-1.97	-0.37	8.82	0.24	-0.20	2.43e-03	3.68e-02	0.22
36	20	4907	7.68	-10.26	-2.15	-0.43	8.93	0.18	-0.20	-1.14e-02	-5.58e-03	0.19
36	20	4908	8.81	-9.14	0.15	-0.47	8.97	0.23	-0.23	6.63e-03	-6.86e-03	0.23

36	20	4909	9.48	-7.71	2.62	-0.85	8.41	0.19	-0.17	2.73e-02	1.39e-03	0.18
36	20	4910	9.29	-6.82	2.80	-0.32	7.90	0.21	-0.20	8.17e-03	-3.92e-03	0.21
36	20	4911	9.40	-6.74	2.86	-0.20	7.93	0.17	-0.17	-2.28e-03	5.48e-03	0.17
36	20	4912	9.52	-6.83	2.95	-0.26	8.02	0.24	-0.19	7.41e-03	4.43e-02	0.21
36	20	4913	9.60	-6.71	3.08	-0.19	7.99	0.18	-0.17	3.59e-03	1.27e-02	0.18
36	20	4914	9.61	-6.68	3.21	-0.29	7.96	0.24	-0.18	1.35e-02	4.78e-02	0.21
36	20	4915	9.73	-6.35	3.34	4.15e-02	7.87	0.18	-0.16	6.93e-03	1.54e-02	0.17
36	20	4916	9.58	-6.41	3.47	-0.30	7.77	0.24	-0.18	1.51e-02	4.91e-02	0.21
36	20	4917	9.72	-6.05	3.60	6.05e-02	7.68	0.18	-0.16	6.34e-03	1.30e-02	0.17
36	20	4918	9.57	-6.13	3.73	-0.29	7.58	0.24	-0.18	1.24e-02	4.73e-02	0.21
36	20	4919	9.77	-5.82	3.86	8.51e-02	7.56	0.17	-0.17	1.86e-03	4.19e-04	0.17
36	20	4920	9.60	-5.91	3.94	-0.24	7.47	0.22	-0.21	1.17e-02	-1.32e-03	0.21
36	20	4921	8.87	-5.50	3.93	-0.56	6.82	0.18	-0.15	2.20e-02	6.25e-04	0.17
36	20	4922	8.30	-4.77	3.79	-0.26	6.21	0.20	-0.19	1.00e-02	-3.73e-03	0.19
36	20	4923	8.19	-4.57	3.42	0.19	6.17	0.16	-0.15	6.70e-03	2.98e-04	0.15
36	20	4924	7.99	-4.71	3.08	0.20	6.19	0.22	-0.17	1.10e-02	3.80e-02	0.20
36	20	4925	7.51	-4.78	2.70	2.70e-02	6.00	0.16	-0.16	5.21e-04	-3.82e-03	0.16
36	20	4926	7.06	-4.64	2.31	0.12	5.75	0.22	-0.17	1.31e-02	3.39e-02	0.19
36	20	4927	6.13	-4.75	1.79	-0.40	5.33	0.15	-0.15	8.56e-03	-5.45e-03	0.15
36	20	4928	5.26	-4.32	1.30	-0.36	4.72	0.20	-0.16	1.85e-02	2.78e-02	0.18
36	20	4929	3.70	-4.10	0.77	-1.17	3.78	0.12	-0.13	2.00e-02	-2.30e-02	0.12
36	20	4930	1.71	-3.44	0.25	-1.98	2.32	0.12	-0.12	1.96e-02	-1.87e-02	0.12
36	20	4931	0.70	-3.72	0.18	-3.20	1.43	4.02e-02	-5.32e-02	2.26e-02	-3.57e-02	3.65e-02
36	20	4932	0.39	-3.97	0.16	-3.74	0.97	-1.09e-02	-8.19e-02	-2.36e-02	-6.92e-02	2.72e-02
36	20	4933	1.29	3.24e-02	0.98	0.35	0.55	4.19e-02	-1.21e-02	1.87e-02	1.11e-02	2.68e-02
36	20	4934	0.39	-0.44	0.23	-0.28	0.33	8.12e-02	-3.34e-02	3.65e-02	1.13e-02	5.59e-02
36	20	4935	0.44	-1.32	-1.03	0.15	0.65	0.11	-0.11	1.49e-02	-6.85e-03	0.11
36	20	4936	0.33	-3.28	-2.56	-0.39	1.45	0.14	-0.13	8.89e-03	4.61e-03	0.14
36	20	4937	0.71	-4.37	-3.41	-0.25	1.99	0.14	-0.17	-4.67e-03	-2.87e-02	0.16
36	20	4938	0.39	-5.19	-4.06	-0.74	2.24	0.16	-0.16	-4.92e-04	-5.75e-03	0.16
36	20	4939	0.76	-5.53	-4.41	-0.36	2.40	0.15	-0.19	-8.20e-03	-3.32e-02	0.17
36	20	4940	0.48	-6.06	-4.81	-0.77	2.57	0.16	-0.17	-3.85e-03	-6.27e-03	0.16
36	20	4941	0.86	-6.24	-4.97	-0.41	2.72	0.15	-0.19	-9.98e-03	-3.02e-02	0.17
36	20	4942	0.77	-6.57	-5.10	-0.70	2.94	0.16	-0.18	-8.72e-03	-6.65e-03	0.17
36	20	4943	1.15	-6.52	-4.93	-0.44	3.11	0.16	-0.20	-5.05e-03	-2.61e-02	0.18
36	20	4944	0.54	-6.59	-5.01	-1.04	2.96	0.16	-0.18	5.17e-03	-3.29e-02	0.17
36	20	4945	0.89	-6.50	-5.20	-0.41	2.81	0.15	-0.18	-5.19e-03	-2.68e-02	0.17
36	20	4946	0.72	-7.05	-5.64	-0.69	2.99	0.16	-0.18	-8.40e-03	-7.73e-03	0.17
36	20	4947	1.13	-7.27	-5.77	-0.37	3.22	0.16	-0.19	-1.07e-02	-2.83e-02	0.17
36	20	4948	0.96	-7.54	-5.87	-0.72	3.38	0.17	-0.18	-6.41e-03	-7.53e-03	0.18
36	20	4949	1.42	-7.47	-5.72	-0.33	3.54	0.16	-0.20	-1.04e-02	-3.12e-02	0.18
36	20	4950	1.23	-7.57	-5.62	-0.72	3.66	0.17	-0.19	-5.08e-03	-8.03e-03	0.18
36	20	4951	1.70	-7.35	-5.34	-0.31	3.77	0.16	-0.20	-9.91e-03	-3.21e-02	0.18
36	20	4952	1.57	-7.38	-5.13	-0.69	3.89	0.18	-0.19	-5.24e-03	-8.16e-03	0.18
36	20	4953	2.04	-7.08	-4.72	-0.32	4.00	0.16	-0.21	-1.01e-02	-3.06e-02	0.18
36	20	4954	2.08	-7.04	-4.32	-0.64	4.17	0.18	-0.20	-8.48e-03	-8.43e-03	0.19
36	20	4955	2.64	-6.63	-3.69	-0.30	4.31	0.18	-0.21	-4.63e-03	-2.77e-02	0.19
36	20	4956	2.13	-6.39	-3.34	-0.92	4.08	0.18	-0.20	5.45e-03	-2.46e-02	0.19
36	20	4957	2.43	-5.83	-3.14	-0.26	3.87	0.16	-0.20	-4.79e-03	-2.87e-02	0.18
36	20	4958	2.31	-6.07	-3.19	-0.57	3.98	0.17	-0.19	-7.98e-03	-9.19e-03	0.18
36	20	4959	2.75	-5.95	-3.01	-0.19	4.12	0.17	-0.21	-8.61e-03	-3.04e-02	0.19
36	20	4960	2.65	-6.08	-2.86	-0.58	4.21	0.18	-0.20	-2.66e-03	-9.12e-03	0.19
36	20	4961	3.08	-5.87	-2.65	-0.15	4.30	0.17	-0.21	-8.04e-03	-3.41e-02	0.19
36	20	4962	2.87	-5.98	-2.51	-0.60	4.32	0.18	-0.20	-4.13e-03	-9.57e-03	0.19
36	20	4963	3.20	-5.79	-2.41	-0.17	4.35	0.17	-0.21	-8.97e-03	-3.48e-02	0.19
36	20	4964	3.04	-5.95	-2.35	-0.56	4.41	0.18	-0.20	-5.09e-03	-9.39e-03	0.19
36	20	4965	3.27	-5.90	-2.46	-0.17	4.44	0.17	-0.21	-7.98e-03	-3.22e-02	0.19
36	20	4966	3.08	-6.18	-2.61	-0.50	4.51	0.18	-0.20	-5.75e-03	-9.04e-03	0.19
36	20	4967	4.69	-4.43	0.40	-0.14	4.55	0.18	-0.21	-1.04e-03	-2.91e-02	0.20
36	20	4968	5.98	-3.42	3.36	-0.79	4.22	0.18	-0.20	9.14e-03	-2.49e-02	0.19
36	20	4969	6.10	-2.60	3.59	-8.99e-02	3.94	0.17	-0.20	-1.01e-03	-2.80e-02	0.19
36	20	4970	6.00	-2.87	3.57	-0.44	3.96	0.18	-0.19	-4.28e-03	-9.01e-03	0.19
36	20	4971	6.30	-2.60	3.74	-3.80e-02	4.03	0.17	-0.20	-6.56e-03	-2.70e-02	0.19
36	20	4972	6.27	-2.88	3.85	-0.46	4.03	0.18	-0.19	-1.96e-03	-8.24e-03	0.19
36	20	4973	6.59	-2.48	4.14	-2.97e-02	4.02	0.17	-0.20	-5.44e-03	-2.88e-02	0.18
36	20	4974	6.51	-2.71	4.27	-0.47	3.96	0.18	-0.19	-1.54e-04	-8.23e-03	0.18
36	20	4975	6.79	-2.28	4.55	-4.16e-02	3.91	0.17	-0.20	-4.76e-03	-2.94e-02	0.18
36	20	4976	6.73	-2.53	4.65	-0.45	3.86	0.18	-0.19	-3.69e-04	-8.07e-03	0.18
36	20	4977	7.00	-2.15	4.94	-8.49e-02	3.82	0.16	-0.20	-4.88e-03	-2.85e-02	0.18
36	20	4978	7.08	-2.37	5.11	-0.40	3.84	0.17	-0.18	-2.75e-03	-8.40e-03	0.18
36	20	4979	7.49	-1.90	5.54	4.63e-02	3.81	0.16	-0.20	1.02e-03	-3.91e-02	0.18
36	20	4980	7.11	-2.22	5.55	-0.67	3.47	0.17	-0.18	1.13e-02	-2.38e-02	0.18
36	20	4981	6.85	-1.41	5.41	2.87e-02	3.13	0.16	-0.19	1.13e-03	-2.85e-02	0.17
36	20	4982	6.34	-1.84	4.88	-0.38	3.13	0.16	-0.18	-2.29e-03	-8.77e-03	0.17
36	20	4983	6.27	-1.45	4.61	0.20	3.17	0.15	-0.18	-5.44e-03	-3.13e-02	0.17
36	20	4984	5.76	-1.97	4.20	-0.42	3.10	0.16	-0.18	-1.88e-03	-1.70e-02	0.17
36	20	4985	5.57	-1.47	3.92	0.18	2.99	0.14	-0.19	-6.56e-03	-3.67e-02	0.17
36	20	4986	4.76	-1.97	3.30	-0.51	2.78	0.15	-0.17	-5.79e-03	-1.97e-02	0.16
36	20	4987	4.10	-1.50	2.66	-5.70e-02	2.45	0.12	-0.18	-1.49e-02	-5.00e-02	0.15

36	20	4988	2.58	-1.92	1.55	-0.89	1.89	9.61e-02	-0.16	-2.96e-02	-3.72e-02	0.13
36	20	4989	0.90	-1.37	0.29	-0.76	1.01	4.03e-02	-0.15	-4.66e-02	-5.85e-02	9.26e-02
36	20	4990	-0.23	-1.53	-0.62	-1.14	0.60	-1.51e-02	-9.49e-02	-4.48e-02	-6.52e-02	3.86e-02
36	20	4991	-0.46	-1.31	-0.79	-0.98	0.42	2.20e-03	-4.96e-02	-3.49e-03	-4.39e-02	1.62e-02
36	20	4992	-0.36	-0.66	-0.50	-0.53	-0.15	5.80e-02	2.14e-03	4.37e-02	1.64e-02	2.43e-02
36	20	4993	-0.57	-1.63	-1.27	-0.92	-0.50	0.10	-2.11e-02	5.01e-02	2.99e-02	6.03e-02
36	20	4994	-7.04e-02	-3.04	-2.89	-0.22	-0.65	0.12	-5.58e-02	4.79e-02	1.35e-02	8.47e-02
36	20	4995	-0.49	-4.56	-4.53	-0.52	-0.34	0.16	-0.12	2.33e-02	1.60e-02	0.14
36	20	4996	-0.31	-5.22	-5.21	-0.32	-0.14	0.15	-0.12	7.37e-03	2.32e-02	0.13
36	20	4997	-0.63	-5.61	-5.61	-0.63	-0.11	0.15	-0.18	2.39e-04	-2.47e-02	0.17
36	20	4998	-0.28	-5.86	-5.86	-0.28	-0.10	0.14	-0.14	-2.32e-03	-1.27e-03	0.14
36	20	4999	-0.59	-6.18	-6.18	-0.59	-7.56e-02	0.16	-0.19	-3.79e-03	-2.61e-02	0.17
36	20	5000	-0.28	-6.33	-6.33	-0.28	-4.55e-02	0.15	-0.14	-5.11e-03	2.47e-02	0.14
36	20	5001	-0.49	-6.34	-6.34	-0.49	5.14e-02	0.16	-0.19	-5.68e-03	-2.51e-02	0.18
36	20	5002	-0.25	-6.01	-6.00	-0.25	0.12	0.14	-0.17	-2.10e-03	-2.81e-02	0.15
36	20	5003	-0.70	-5.94	-5.94	-0.70	-4.90e-02	0.16	-0.19	4.25e-04	-2.87e-02	0.18
36	20	5004	-0.23	-6.30	-6.29	-0.24	-0.21	0.13	-0.16	-2.27e-03	-2.83e-02	0.14
36	20	5005	-0.49	-6.91	-6.91	-0.49	-0.13	0.16	-0.19	-6.75e-03	-2.35e-02	0.18
36	20	5006	-0.27	-7.16	-7.16	-0.27	-3.15e-02	0.16	-0.14	-5.85e-03	2.40e-02	0.15
36	20	5007	-0.54	-7.23	-7.23	-0.54	2.09e-02	0.17	-0.20	-5.89e-03	-2.49e-02	0.18
36	20	5008	-0.25	-7.05	-7.05	-0.25	6.55e-02	0.15	-0.15	-5.50e-03	-1.90e-03	0.15
36	20	5009	-0.56	-6.88	-6.88	-0.56	7.92e-02	0.17	-0.20	-5.44e-03	-2.48e-02	0.19
36	20	5010	-0.23	-6.55	-6.55	-0.23	9.33e-02	0.15	-0.16	-5.15e-03	-1.80e-03	0.15
36	20	5011	-0.53	-6.26	-6.26	-0.53	0.11	0.18	-0.21	-5.10e-03	-2.45e-02	0.19
36	20	5012	-0.20	-5.78	-5.78	-0.21	0.13	0.17	-0.15	-5.93e-03	2.43e-02	0.16
36	20	5013	-0.38	-5.20	-5.19	-0.40	0.24	0.18	-0.21	-5.27e-03	-2.29e-02	0.19
36	20	5014	-0.10	-4.34	-4.31	-0.13	0.33	0.15	-0.18	-1.75e-03	-2.80e-02	0.16
36	20	5015	-0.65	-3.80	-3.79	-0.66	0.11	0.18	-0.21	1.20e-03	-2.59e-02	0.19
36	20	5016	-0.12	-3.67	-3.67	-0.12	-7.18e-02	0.14	-0.17	-2.49e-03	-2.86e-02	0.15
36	20	5017	-0.42	-3.81	-3.80	-0.42	-1.62e-02	0.19	-0.20	-5.63e-03	-2.13e-03	0.19
36	20	5018	-9.58e-02	-3.63	-3.63	-9.62e-02	3.48e-02	0.15	-0.16	-4.03e-03	-2.01e-03	0.16
36	20	5019	-0.50	-3.43	-3.43	-0.50	9.19e-02	0.19	-0.21	-2.43e-03	-2.21e-02	0.20
36	20	5020	-4.98e-02	-3.11	-3.10	-5.58e-02	0.14	0.14	-0.17	-4.36e-03	-2.74e-02	0.16
36	20	5021	-0.49	-2.92	-2.92	-0.50	0.13	0.18	-0.21	-4.33e-03	-2.25e-02	0.20
36	20	5022	-2.77e-02	-2.75	-2.74	-4.01e-02	0.18	0.14	-0.17	-5.55e-03	-2.71e-02	0.16
36	20	5023	-0.42	-2.71	-2.69	-0.44	0.24	0.19	-0.21	-4.12e-03	-2.22e-02	0.20
36	20	5024	-1.36e-02	-2.77	-2.74	-3.97e-02	0.27	0.16	-0.16	-4.70e-03	-1.51e-03	0.16
36	20	5025	-0.28	-3.02	-2.98	-0.32	0.33	0.20	-0.20	-1.67e-03	-1.55e-03	0.20
36	20	5026	0.63	-0.17	0.37	9.63e-02	0.38	0.15	-0.18	2.54e-03	-2.77e-02	0.16
36	20	5027	4.02	-0.60	4.01	-0.60	0.12	0.19	-0.21	7.09e-03	-1.91e-02	0.20
36	20	5028	4.23	5.47e-02	4.23	5.52e-02	-4.28e-02	0.14	-0.17	-5.66e-04	-3.18e-02	0.16
36	20	5029	4.11	-0.42	4.11	-0.42	1.77e-02	0.19	-0.20	-4.56e-03	-1.90e-03	0.20
36	20	5030	4.32	0.22	4.32	0.22	9.95e-02	0.14	-0.18	-6.25e-03	-3.11e-02	0.16
36	20	5031	4.44	-0.48	4.44	-0.47	0.15	0.19	-0.20	-1.67e-03	-1.67e-03	0.19
36	20	5032	4.83	0.24	4.82	0.25	0.17	0.14	-0.17	-4.19e-03	-3.17e-02	0.16
36	20	5033	4.98	-0.48	4.98	-0.48	0.12	0.19	-0.19	-4.59e-04	-1.60e-03	0.19
36	20	5034	5.36	0.27	5.35	0.27	0.11	0.14	-0.17	-3.72e-03	-3.17e-02	0.15
36	20	5035	5.47	-0.46	5.47	-0.45	0.11	0.19	-0.19	-6.22e-04	-1.57e-03	0.19
36	20	5036	5.85	0.28	5.85	0.28	0.12	0.13	-0.17	-5.52e-03	-3.11e-02	0.15
36	20	5037	6.12	-0.37	6.11	-0.37	0.19	0.18	-0.19	-1.19e-03	-9.20e-04	0.18
36	20	5038	6.77	0.30	6.76	0.30	0.21	0.14	-0.16	3.65e-03	-2.98e-02	0.15
36	20	5039	6.85	-0.55	6.85	-0.55	1.47e-02	0.20	-0.17	1.27e-02	1.32e-02	0.18
36	20	5040	6.63	0.28	6.63	0.29	-0.20	0.13	-0.16	5.74e-03	-3.07e-02	0.14
36	20	5041	5.96	-0.33	5.96	-0.33	-0.15	0.17	-0.19	-4.43e-03	-2.09e-02	0.18
36	20	5042	5.72	0.30	5.72	0.30	-7.99e-02	0.12	-0.16	-5.11e-03	-2.90e-02	0.14
36	20	5043	5.39	-0.36	5.39	-0.36	-6.86e-02	0.17	-0.17	-5.24e-04	-1.51e-03	0.17
36	20	5044	5.30	0.31	5.30	0.31	-7.93e-02	0.12	-0.15	-5.06e-03	-2.72e-02	0.14
36	20	5045	4.89	-0.35	4.89	-0.35	-0.12	0.15	-0.18	-8.80e-03	-2.15e-02	0.17
36	20	5046	4.61	0.36	4.60	0.37	-0.18	9.56e-02	-0.15	-2.43e-02	-3.34e-02	0.12
36	20	5047	3.74	-0.33	3.71	-0.31	-0.32	9.53e-02	-0.17	-4.58e-02	-3.27e-02	0.13
36	20	5048	2.49	4.21e-02	2.36	0.17	-0.54	5.04e-04	-0.14	-8.03e-02	-5.78e-02	6.86e-02
36	20	5049	1.04	-0.13	0.93	-2.98e-02	-0.33	-2.04e-02	-0.12	-7.19e-02	-6.91e-02	5.01e-02
36	20	5050	0.58	0.11	0.48	0.22	-0.19	-1.06e-02	-7.07e-02	-4.78e-02	-3.35e-02	2.91e-02

M_G	**N max**	**N min**	**N 1**	**N 2**	**N 1-2**	**M max**	**M min**	**M 1**	**M 2**	**M 1-2**
		-12.63	-12.63	-10.40	-5.37		-7.20	-4.83	-7.20	-2.33
	13.47		13.45	12.12	8.97	14.35		14.35	7.16	2.32

VERIFICHE

VERIFICHE ELEMENTI TRAVE E/O PILASTRO IN C.A.

LEGENDA TABELLA VERIFICHE ELEMENTI TRAVE E/O PILASTRO IN C.A.

In tabella vengono riportati per ogni elemento il numero identificativo ed il codice di verifica con le sigle **Ok** o **NV**.

Nel caso in cui si sia proceduto alla progettazione con le tensioni ammissibili (**T.A.**) vengono riportate le massime tensioni nell'elemento (massima compressione nel calcestruzzo, massima compressione media nel calcestruzzo, massima tensione nell'acciaio, massima tensione tangenziale) con l'indicazione delle combinazioni in cui si sono attinti i rispettivi valori.

Nel caso in cui si sia proceduto alla progettazione con il metodo degli stati limite (**S.L.**) vengono riportati: il rapporto x/d, le verifiche per sollecitazioni proporzionali e la verifica per compressione media con l'indicazione delle combinazioni in cui si sono attinti i rispettivi valori.

Nel caso in cui la struttura abbia comportamento dissipativo e sia prevista la progettazione con il criterio della gerarchia delle resistenze **(G.R.)** vengono riportate le verifiche di sovraresistenza e del nodo.

Per gli elementi tipo pilastro sono riportati numero e diametro dei ferri di vertice, numero e diametro di ferri disposti lungo i lati L1 (paralleli alla base della sezione) e lungo i lati L2 (paralleli all'altezza della sezione).

Per gli elementi tipo trave sono riportati infine le quantità di armatura inferiore e superiore.

Schema della distribuzione delle armature longitudinali

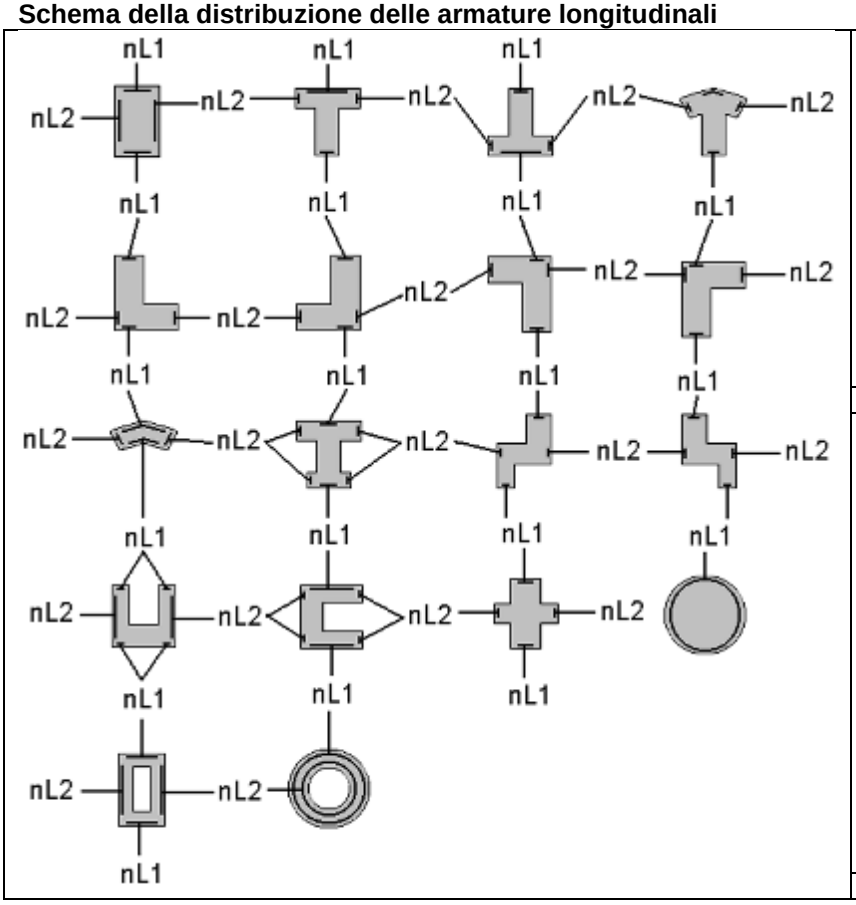

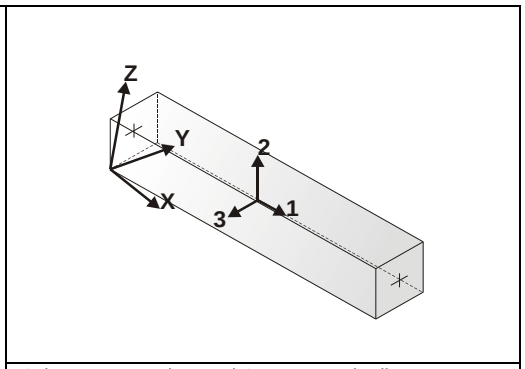

Orientamento elementi 2D non verticali

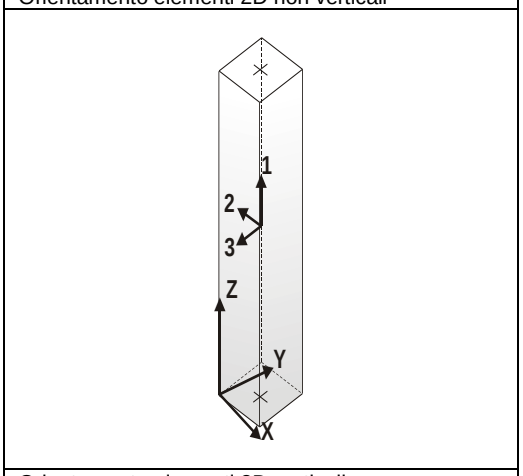

Orientamento elementi 2D verticali

PROGETTAZIONE DELLE FONDAZIONI

Il D.M.17/01/2018 - par: 7.2.5 prevede:

"Sia per CD"A" sia per CD"B" il dimensionamento delle strutture di fondazione e la verifica di sicurezza del complesso fondazione-terreno devono essere eseguiti assumendo come azione in fondazione, trasmessa dagli elementi soprastanti, una tra le seguenti:

- quella derivante dall'analisi strutturale eseguita ipotizzando comportamento strutturale non dissipativo;
- […];
- quella trasferita dagli elementi soprastanti nell'ipotesi di comportamento strutturale dissipativo, amplificata di un coefficiente pari a 1,30 in CD"A" e 1,10 in CD"B";

Nel contesto visualizzazione risultati e nella stampa della relazione sulle fondazioni PRO_SAP mostra le sollecitazioni che derivano dall'analisi non incrementate sia in termini di pressioni sul terreno che in termini di sollecitazioni.

La progettazione degli elementi strutturali con proprietà fondazione è effettuata da PRO_SAP (per travi e platee) o da PRO_CAD Plinti (per plinti e pali di fondazione) incrementando le sollecitazioni delle combinazioni con sisma di un coefficiente pari 1.1 in CDB e 1.3 in CDA per pali, plinti, travi e platee.
Per i bicchieri dei plinti di fondazione prefabbricati l'incremento delle sollecitazioni ha un fattore pari a 1.2 in CDB e 1.35 in CDA.
N.B.: nel caso di comportamento strutturale non dissipativo la progettazione viene effettuata senza nessun incremento.

Le verifiche geotecniche vengono effettuate dal modulo geotecnico incrementando automaticamente le sollecitazioni del fattore 1.1 in CDB e 1.3 in CDA per pali, plinti, travi e platee.
N.B.: nel caso di comportamento strutturale non dissipativo le verifiche geotecniche vengono effettuate senza nessun incremento.

Simbologia adottata nelle tabelle di verifica

Per le verifiche alle T.A. di pilastri e travi è presente una tabella con i simboli di seguito descritti:

M_P X Y	Numero della pilastrata (P) e posizione in pianta (X,Y)
M_T Z P P	Numero della travata, quota media pilastrata iniziale e finale (nodo in assenza di pilastrata)
Pilas. o Trave	numero identificativo dell'elemento D2
Note	Viene riportato il codice relativo alla sezione(s) e relativo al materiale(m); nella terza riga viene riportato il valore delle snellezze in direzione 2-2 e 3-3
Stato	Codici di verifica relativi alle tensioni normali e alle tensioni tangenziali
Quota	Ascissa del punto di verifica
%Af	Percentuale di area di armatura rispetto a quella di calcestruzzo
Armat. long.	Numero e diametro dei ferri di armatura longitudinale: ferri di vertice + ferri di lato (come da fig. precedente)
Af inf.	Area di armatura longitudinale posta all'intradosso della trave
Af sup	Area di armatura longitudinale posta all'estradosso della trave
Sc max	Massima tensione di compressione del calcestruzzo
Sc med	Massima tensione media di compressione del calcestruzzo
Sf max	Tensione massima nell'acciaio
staffe	Vengono riportati i dati del tratto di staffatura in cui cade la sezione di verifica; in particolare: numero dei bracci, diametro, passo, lunghezza tratto
Tau max	Tensione massima tangenziale nel cls
Rif. comb	Combinazioni in cui si generano i seguenti valori di tensione: Sc max, Sc med, Sf max, Tau max
AfV	area dell'armatura atta ad assorbire le azioni di taglio
AfT	area dell'armatura atta ad assorbire le azioni di torsione
Scorr. P	Scorrimento dei piegati
Af long.	Area del ferro longitudinale aggiuntivo per assorbire la torsione

Per le verifiche agli S.L. dei pilastri è presente una tabella con i simboli di seguito descritti:

M_P X Y	Numero della pilastrata (P) e posizione in pianta (X,Y)
Pilas.	numero identificativo dell'elemento D2
Note	Codici identificativi delle sezione (s) e materiale (m) pilastro
Stato	Codici relativi all'esito delle verifiche effettuate appresso descritte
Quota	Quota sezione di verifica
%Af	Percentuale di area di armatura rispetto a quella di calcestruzzo
r. snell.	Rapporto di snellezza λ su λ^*: valore superiore a 1 per elementi snelli nel caso in cui viene effettuata la verifica con il metodo diretto dello stato di equilibrio
Armat. long.	Numero e diametro (d) dei ferri di armatura longitudinale distinti in ferri di vertice + ferri di lato nelle posizioni nL1 e nL2, come da schemi in figura precedente
V N/M	Verifica a pressoflessione con rapporto Ed/Rd: valore minore o uguale a 1 per verifica positiva
V N sis	Verifica a compressione solo calcestruzzo con rapporto Nsd/Nrd ed Nrd calcolato come al punto 7.4.4.2.1: valore minore o uguale a 1 per verifica positiva
Staffe	Dati tratto di staffatura oggetto di verifica, nello specifico: numero delle braccia, diametro, passo, lunghezza L tratto
V V/T cls	Verifica a taglio/torsione con rapporto Ved/Vrd: valore minore o uguale a 1 per verifica positiva
Rif. cmb.	Riferimento combinazioni da cui si generano le verifiche più gravose per il pilastro

Per le verifiche alla G.R. dei pilastri è presente una tabella con i simboli di seguito descritti:

Pilas.	numero identificativo dell'elemento D2 pilastro
sovr. Xi (Xf)	Verifica sovraresistenza come da formula 7.4.4 in direzione X, alla base (i) ed alla sommità (f): rapporto tra i momenti resistenti dei pilastri e delle travi. La verifica è positiva se maggiore del γ_{Rd} adottato
sovr. Yi (Yf)	Verifica sovraresistenza come da formula 7.4.4 in direzione Y, alla base (i) ed alla sommità (f): rapporto tra i momenti

	resistenti dei pilastri e delle travi. La verifica è positiva se maggiore del γ_{Rd} adottato
M 2-2 i (f)	Valore del momento resistente 2-2 alla base (i) ed alla sommità (f) con massimo momento in presenza dello sforzo normale di calcolo
M 3-3 i (f)	Valore del momento resistente 3-3 alla base (i) ed alla sommità (f) con massimo momento in presenza dello sforzo normale di calcolo
Luce per V	Luce di calcolo per la definizione del taglio (generato dai momenti resistenti)
V M2-2 (M3-3)	Valore del taglio generato dai momenti resistenti 2-2 (3-3)

Per le verifiche dei dettagli costruttivi per la duttilità è presente una tabella con i simboli di seguito descritti:
(Non presente nel caso di comportamento strutturale non dissipativo)

Pilas	Numero identificativo D2 pilastro
ni	Sforzo assiale adimensionalizzato di progetto relativo alla combinazione sismica SLV
alfaomega	Prodotto tra il coefficiente di efficacia del confinamento e il rapporto meccanico dell'armatura trasversale di confinamento all'interno del nodo
V.7.4.29 2-2 (3-3)	Rapporto tra la domanda di staffe minima nel nodo e il rapporto meccanico dell'armatura trasversale di confinamento inserito all'interno del nodo in direzione 2 (3)
V. 7.4.29 Stato	Codici relativi all'esito della verifica 7.4.29
dmu_fi 2-2 (3-3)	Domanda in duttilità di curvatura in direzione 2 (3)
cmu_fi 2-2 (3-3)	Capacità in duttilità di curvatura in direzione 2 (3)
V. dutt. 2-2 (3-3)	Rapporto tra la domanda in duttilità di curvatura e la capacità in duttilità di curvatura in direzione 2 (3)

Per le verifiche nodi trave-pilastro è presente una tabella con i simboli di seguito descritti:

Nodo	Numero identificativo del nodo trave-pilastro
Stato	Esito delle verifiche
Pilastro	Numero identificativo D2 pilastro
Diam st	Diametro staffe nodo
Passo	Passo staffe nodo
n. br. 2 (3)	Numero braccia staffe per il taglio in direzione 2 (3)
Bj2 (3)	Larghezza effettiva del nodo per il taglio in direzione 2 (3)
Hjc2 (3)	Distanza tra le giaciture più esterne delle armature del pilastro per il taglio in direzione 2 (3)
V. 7.4.8	Rapporto tra il taglio Vjbd e il taglio resistente come da formula 7.4.8
V. Ash	Rapporto tra il passo staffe calcolato secondo il capitolo 7.4.4.3.1. e il passo staffe effattivamente inserita nel nodo. Nel caso di valore indica passo staffe utilizzato deriva dalle formule presenti nel paragrafo 7.4.4.3.1. Nel caso di valore minore di 1 il passo staffe utilizzato deriva del pilastro superiore o inferiore al nodo
7.4.10	Check passo staffe valutato in funzione della formula 7.4.10: • SI il passo staffe è calcolato utilizzando la formula 7.4.10; • NO il passo staffe è calcolato utilizzando le formule 7.4.11 e/o 7.4.12; • NR calcolo passo staffe non richiesto;
Rif. comb.	Riferimento combinazioni da cui si generano le verifiche più gravose per il nodo

Per le verifiche agli S.L. delle travi è presente una tabella con i simboli di seguito descritti:

M_T Z P P	Numero della travata (T), quota media (Z), n° pilastrata iniziale (P) e finale (P) (nodo in assenza di pilastrata)
Trave	numero identificativo dell'elemento D2
Note	Codici identificativi sezione (s) e materiale (m) trave; sono inoltre presenti le sigle relative all'esito delle verifiche effettuate appresso descritte
%Af	Percentuale di area di armatura rispetto a quella di calcestruzzo
Af inf.	Area di armatura longitudinale posta all'intradosso
Af sup	Area di armatura longitudinale posta all'estradosso
Af long.	Area complessiva armatura longitudinale
x/d	rapporto tra posizione dell'asse neutro e altezza utile
V N/M	Verifica a pressoflessione rapporto Ed/Rd: valore minore o uguale a 1 per verifica positiva
Staffe	Dati tratto di staffatura oggetto di verifica, nello specifico: numero delle braccia, diametro, passo, lunghezza L tratto
V V/T cls	Verifica a taglio/torsione con rapporto Ved/Vrd: valore minore o uguale a 1 per verifica positiva
Rif. cmb.	Riferimento combinazioni da cui si generano le verifiche più gravose per la trave

Per le verifiche alla G.R. delle travi è presente una tabella con i simboli di seguito descritti:

Trave	numero identificativo dell'elemento D2 trave
M negativo i (f)	Valore del momento resistente negativo all' estremità iniziale i (finale f) della trave
M positivo i (f)	Valore del momento resistente positivo all' estremità iniziale i (finale f) della trave
Luce per V	Luce di calcolo per la definizione del taglio (generato dai momenti resistenti)
V M-i M+f	Taglio generato dai momenti resistenti negativo i e positivo f
V M+i M-f	Taglio generato dai momenti resistenti positivo i e negativo f
VEd, min	Valore di taglio minimo per verifica condizioni p.to 7.4.4.1.1 armatura diagonale (solo per CD "A")
VEd, max	Valore di taglio massimo per verifica condizioni p.to 7.4.4.1.1 armatura diagonale (solo per CD "A")
Vr1	Valore di taglio come da formula 7.4.1 per armatura diagonale (solo per CD "A")
As	Area singolo ordine armature diagonali come da formula 7.4.2 (solo per CD "A")

M_P= 1 X=50.0 Y=55.0

Pilas.	Note	Stato	Quota	%Af	r. snell.	Armat. long.	V N/M	V N sis	Staffe	V V/T cls	V V/T acc	Rif. cmb

			cm							L=cm			
1	s=1,m=1	ok,ok	0.0	1.37	0.32	4d14 2+2 d14	0.31	0.06	3+3d8/15	L=45	0.08	0.04	
147,152,127,127													
			184.5	1.37	0.32	4d14 2+2 d14	0.08	0.05	3+3d8/15	L=279	0.08	0.04	
146,152,127,127													
	[b=1.0;1.0]		369.0	1.37	0.32	4d14 2+2 d14	0.19	0.05	3+3d8/15	L=45	0.08	0.04	
147,152,127,127													
27	s=1,m=1	ok,ok	369.0	1.37	0.03	4d14 2+2 d14	0.27	0.04	3+3d8/15	L=45	0.10	0.06	
147,152,127,127													
	[b=1.0;1.0]		414.0	1.37	0.03	4d14 2+2 d14	0.23	0.04	3+3d8/15	L=45	0.10	0.06	
147,152,127,127													
					M_P= 2	**X=505.0**	**Y=55.0**						
Pilas.	Note	Stato	Quota	%Af	r. snell.	Armat. long.	V N/M	V N sis	Staffe		V V/T cls	V V/T acc	Rif. cmb
2	s=1,m=1	ok,ok	0.0	1.37	0.44	4d14 2+2 d14	0.28	0.10	3+3d8/15	L=45	0.08	0.05	
147,152,132,124													
			184.5	1.37	0.44	4d14 2+2 d14	0.05	0.10	3+3d8/15	L=279	0.08	0.05	
126,152,132,124													
	[b=1.0;1.0]		369.0	1.37	0.44	4d14 2+2 d14	0.16	0.09	3+3d8/15	L=45	0.08	0.05	
144,152,132,124													
28	s=1,m=1	ok,ok	369.0	1.37	0.05	4d14 2+2 d14	0.24	0.08	3+3d8/15	L=45	0.11	0.07	
140,152,132,128													
	[b=1.0;1.0]		414.0	1.37	0.05	4d14 2+2 d14	0.24	0.07	3+3d8/15	L=45	0.11	0.07	
146,152,132,128													
					M_P= 3	**X=1050.0**	**Y=55.0**						
Pilas.	Note	Stato	Quota	%Af	r. snell.	Armat. long.	V N/M	V N sis	Staffe		V V/T cls	V V/T acc	Rif. cmb
3	s=1,m=1	ok,ok	0.0	1.37	0.45	4d14 2+2 d14	0.26	0.11	3+3d8/15	L=45	0.08	0.05	
147,152,124,127													
			184.5	1.37	0.45	4d14 2+2 d14	0.05	0.10	3+3d8/15	L=279	0.08	0.05	
147,152,124,127													
	[b=1.0;1.0]		369.0	1.37	0.45	4d14 2+2 d14	0.14	0.10	3+3d8/15	L=45	0.08	0.05	
140,152,124,127													
29	s=1,m=1	ok,ok	369.0	1.37	0.05	4d14 2+2 d14	0.23	0.08	3+3d8/15	L=45	0.08	0.04	
140,152,135,124													
	[b=1.0;1.0]		414.0	1.37	0.05	4d14 2+2 d14	0.23	0.07	3+3d8/15	L=45	0.08	0.04	
146,152,135,124													
					M_P= 4	**X=1595.0**	**Y=55.0**						
Pilas.	Note	Stato	Quota	%Af	r. snell.	Armat. long.	V N/M	V N sis	Staffe		V V/T cls	V V/T acc	Rif. cmb
4	s=1,m=1	ok,ok	0.0	1.37	0.45	4d14 2+2 d14	0.26	0.11	3+3d8/15	L=45	0.08	0.04	
137,142,124,126													
			184.5	1.37	0.45	4d14 2+2 d14	0.05	0.10	3+3d8/15	L=279	0.08	0.04	
142,142,124,126													
	[b=1.0;1.0]		369.0	1.37	0.45	4d14 2+2 d14	0.14	0.10	3+3d8/15	L=45	0.08	0.04	
146,142,124,126													
30	s=1,m=1	ok,ok	369.0	1.37	0.05	4d14 2+2 d14	0.23	0.08	3+3d8/15	L=45	0.08	0.04	
146,142,129,126													
	[b=1.0;1.0]		414.0	1.37	0.05	4d14 2+2 d14	0.23	0.07	3+3d8/15	L=45	0.08	0.04	
140,142,129,126													
					M_P= 5	**X=2140.0**	**Y=55.0**						
Pilas.	Note	Stato	Quota	%Af	r. snell.	Armat. long.	V N/M	V N sis	Staffe		V V/T cls	V V/T acc	Rif. cmb
5	s=1,m=1	ok,ok	0.0	1.37	0.44	4d14 2+2 d14	0.28	0.10	3+3d8/15	L=45	0.08	0.05	
137,142,134,126													
			184.5	1.37	0.44	4d14 2+2 d14	0.06	0.10	3+3d8/15	L=279	0.08	0.05	
124,142,134,126													
	[b=1.0;1.0]		369.0	1.37	0.44	4d14 2+2 d14	0.16	0.09	3+3d8/15	L=45	0.08	0.05	
150,142,134,126													
31	s=1,m=1	ok,ok	369.0	1.37	0.05	4d14 2+2 d14	0.24	0.08	3+3d8/15	L=45	0.11	0.07	
146,142,134,122													
	[b=1.0;1.0]		414.0	1.37	0.05	4d14 2+2 d14	0.24	0.07	3+3d8/15	L=45	0.11	0.07	
140,142,134,122													
					M_P= 6	**X=2595.0**	**Y=55.0**						
Pilas.	Note	Stato	Quota	%Af	r. snell.	Armat. long.	V N/M	V N sis	Staffe		V V/T cls	V V/T acc	Rif. cmb
6	s=1,m=1	ok,ok	0.0	1.37	0.32	4d14 2+2 d14	0.30	0.06	3+3d8/15	L=45	0.08	0.04	
137,142,121,126													
			184.5	1.37	0.32	4d14 2+2 d14	0.08	0.05	3+3d8/15	L=279	0.08	0.04	
140,142,121,126													
	[b=1.0;1.0]		369.0	1.37	0.32	4d14 2+2 d14	0.19	0.05	3+3d8/15	L=45	0.08	0.04	
137,142,121,126													
32	s=1,m=1	ok,ok	369.0	1.37	0.03	4d14 2+2 d14	0.27	0.04	3+3d8/15	L=45	0.10	0.06	
137,142,121,121													
	[b=1.0;1.0]		414.0	1.37	0.03	4d14 2+2 d14	0.23	0.04	3+3d8/15	L=45	0.10	0.06	
137,142,121,121													

Pilas.	**%Af**	**r. snell.**	**V N/M**	**V N sis**	**V V/T cls**	**V V/T acc**
	1.37	0.45	0.31	0.11	0.11	0.07

Nodo	**Stato**	**Pilas.**	**Diam st**	**Passo**	**n. br. 2**	**Bj2**	**Hjc2**	**n. br. 3**	**Bj3**	**Hjc3**	**V. 7.4.8**	**V. Ash**	**7.4.10**	**Rif. cmb**
			mm	cm		cm	cm		cm	cm				

3476	ok	1	8	15.0	3	30.0	23.0	3	30.0	23.0	0.4	0.6	NO	126,133
3477	ok	2	8	12.5	3	30.0	23.0	3	30.0	23.0	0.6	0.9	NO	122,133
3478	ok	3	8	12.5	3	30.0	23.0	3	30.0	23.0	0.6	0.9	NO	134,133
3479	ok	4	8	12.5	3	30.0	23.0	3	30.0	23.0	0.6	0.9	NO	132,131
3480	ok	5	8	12.5	3	30.0	23.0	3	30.0	23.0	0.6	0.9	NO	128,131
3481	ok	6	8	15.0	3	30.0	23.0	3	30.0	23.0	0.4	0.6	NO	124,131

Nodo	**Passo**	**V. 7.4.8**	**V. Ash**
	12.50		
		0.63	0.95

Trave	Note	Pos. cm	%Af	Af inf.	Af. sup	Af long.	**M_T= 1** x/d	**Z=390.4** V N/M	**P=1** V V/T cls	**P=6** V V/T acc	Staffe L=cm	Rif. cmb
7	ok,ok	0.0	0.34	4.3	4.5	0.0	0.05	6.52e-03	0.03	7.87e-03	2d8/15 L=43	139,0,32
	s=2,m=1	57.7	0.34	4.3	4.5	0.0	0.05	0.01	0.03	4.78e-03	2d8/15 L=43	30,150,150
17	ok,ok	0.0	0.34	4.3	4.5	0.0	0.05	0.01	0.02	4.23e-03	2d8/15 L=58	30,0,32
	s=2,m=1	57.7	0.34	4.3	4.5	0.0	0.05	0.02	0.02	1.30e-03	2d8/15 L=58	30,0,0
33	ok,ok	0.0	0.50	2.3	2.3	0.0	0.15	0.11	0.06	3.36e-03	2d8/15 L=50	30,0,0
	s=3,m=1	57.7	0.50	2.3	2.3	0.0	0.15	0.09	0.07	0.01	2d8/20 L=8	30,0,7
43	ok,ok	0.0	0.50	2.3	2.3	0.0	0.15	0.09	0.06	0.01	2d8/20 L=58	30,0,0
	s=3,m=1	57.7	0.50	2.3	2.3	0.0	0.15	0.05	0.07	0.02	2d8/20 L=58	30,0,7
44	ok,ok	0.0	0.50	2.3	2.3	0.0	0.15	0.05	0.11	0.02	2d8/20 L=58	30,0,7
	s=3,m=1	57.7	0.50	2.3	2.3	0.0	0.15	0.09	0.11	0.01	2d8/20 L=58	30,0,0
34	ok,ok	0.0	0.50	2.3	2.3	0.0	0.15	0.09	0.11	0.01	2d8/20 L=8	30,0,7
	s=3,m=1	57.7	0.50	2.3	2.3	0.0	0.15	0.11	0.10	3.63e-03	2d8/15 L=50	30,0,0
18	ok,ok	0.0	0.34	4.3	4.5	0.0	0.05	0.02	0.03	1.29e-03	2d8/15 L=58	30,0,0
	s=2,m=1	57.7	0.34	4.3	4.5	0.0	0.05	0.01	0.04	4.23e-03	2d8/15 L=58	30,0,32
8	ok,ok	0.0	0.34	4.3	4.5	0.0	0.05	0.01	0.04	4.65e-03	2d8/15 L=43	30,0,0
	s=2,m=1	57.7	0.34	4.3	4.5	0.0	0.05	6.44e-03	0.05	7.87e-03	2d8/15 L=43	141,146,32
9	ok,ok	0.0	0.34	4.3	4.5	0.0	0.05	0.01	0.06	8.94e-03	2d8/15 L=43	139,0,32
	s=2,m=1	57.7	0.34	4.3	4.5	0.0	0.05	0.02	0.05	5.63e-03	2d8/15 L=43	30,148,146
19	ok,ok	0.0	0.34	4.3	4.5	0.0	0.05	0.02	0.05	5.30e-03	2d8/15 L=58	30,0,32
	s=2,m=1	57.7	0.34	4.3	4.5	0.0	0.05	0.02	0.04	9.63e-04	2d8/15 L=58	30,0,0
35	ok,ok	0.0	0.34	4.3	4.5	0.0	0.05	0.02	0.04	7.35e-04	2d8/15 L=58	30,0,0
	s=2,m=1	57.7	0.34	4.3	4.5	0.0	0.05	0.02	0.04	4.50e-03	2d8/15 L=58	30,0,7
45	ok,ok	0.0	0.50	2.3	2.3	0.0	0.15	0.10	0.15	0.01	2d8/15 L=50	30,0,7
	s=3,m=1	57.7	0.50	2.3	2.3	0.0	0.15	0.04	0.15	0.03	2d8/20 L=8	126,0,7
53	ok,ok	0.0	0.50	2.3	2.3	0.0	0.15	0.04	0.05	5.60e-03	2d8/20 L=90	126,0,17
	s=3,m=1	90.0	0.50	2.3	2.3	0.0	0.15	0.04	0.05	5.60e-03	2d8/20 L=90	126,0,8
46	ok,ok	0.0	0.50	2.3	2.3	0.0	0.15	0.04	0.19	0.03	2d8/20 L=8	126,0,7
	s=3,m=1	57.7	0.50	2.3	2.3	0.0	0.15	0.10	0.18	0.01	2d8/15 L=50	30,0,7
36	ok,ok	0.0	0.34	4.3	4.5	0.0	0.05	0.02	0.05	4.50e-03	2d8/15 L=58	30,0,7
	s=2,m=1	57.7	0.34	4.3	4.5	0.0	0.05	0.02	0.05	7.62e-04	2d8/15 L=58	30,0,0
20	ok,ok	0.0	0.34	4.3	4.5	0.0	0.05	0.02	0.05	9.06e-04	2d8/15 L=58	30,0,0
	s=2,m=1	57.7	0.34	4.3	4.5	0.0	0.05	0.02	0.06	5.30e-03	2d8/15 L=58	30,0,32
10	ok,ok	0.0	0.34	4.3	4.5	0.0	0.05	0.02	0.06	5.47e-03	2d8/15 L=43	30,0,0
	s=2,m=1	57.7	0.34	4.3	4.5	0.0	0.05	0.01	0.07	8.94e-03	2d8/15 L=43	141,146,32
11	ok,ok	0.0	0.34	4.3	4.5	0.0	0.05	0.01	0.05	8.52e-03	2d8/15 L=43	139,0,32
	s=2,m=1	57.7	0.34	4.3	4.5	0.0	0.05	0.01	0.05	5.07e-03	2d8/15 L=43	30,140,150
21	ok,ok	0.0	0.34	4.3	4.5	0.0	0.05	0.01	0.05	4.89e-03	2d8/15 L=58	30,0,32
	s=2,m=1	57.7	0.34	4.3	4.5	0.0	0.05	0.02	0.04	4.46e-04	2d8/15 L=58	30,0,0
37	ok,ok	0.0	0.34	4.3	4.5	0.0	0.05	0.02	0.04	4.24e-04	2d8/15 L=58	30,0,0
	s=2,m=1	57.7	0.34	4.3	4.5	0.0	0.05	0.01	0.04	4.89e-03	2d8/15 L=58	30,0,7
47	ok,ok	0.0	0.50	2.3	2.3	0.0	0.15	0.09	0.14	0.02	2d8/15 L=50	30,0,7
	s=3,m=1	57.7	0.50	2.3	2.3	0.0	0.15	0.03	0.15	0.03	2d8/20 L=8	141,0,7
54	ok,ok	0.0	0.50	2.3	2.3	0.0	0.15	0.03	0.05	5.60e-03	2d8/20 L=90	137,0,17
	s=3,m=1	90.0	0.50	2.3	2.3	0.0	0.15	0.03	0.05	5.60e-03	2d8/20 L=90	151,0,8
48	ok,ok	0.0	0.50	2.3	2.3	0.0	0.15	0.03	0.15	0.03	2d8/20 L=8	147,0,7
	s=3,m=1	57.7	0.50	2.3	2.3	0.0	0.15	0.09	0.14	0.02	2d8/15 L=50	30,0,7
38	ok,ok	0.0	0.34	4.3	4.5	0.0	0.05	0.01	0.04	4.89e-03	2d8/15 L=58	30,0,7
	s=2,m=1	57.7	0.34	4.3	4.5	0.0	0.05	0.02	0.04	4.25e-04	2d8/15 L=58	30,0,0
22	ok,ok	0.0	0.34	4.3	4.5	0.0	0.05	0.02	0.04	4.45e-04	2d8/15 L=58	30,0,0
	s=2,m=1	57.7	0.34	4.3	4.5	0.0	0.05	0.01	0.04	4.89e-03	2d8/15 L=58	30,0,32
12	ok,ok	0.0	0.34	4.3	4.5	0.0	0.05	0.01	0.05	5.07e-03	2d8/15 L=43	30,0,0
	s=2,m=1	57.7	0.34	4.3	4.5	0.0	0.05	0.01	0.05	8.52e-03	2d8/15 L=43	145,146,32
13	ok,ok	0.0	0.34	4.3	4.5	0.0	0.05	0.01	0.07	8.93e-03	2d8/15 L=43	151,0,32
	s=2,m=1	57.7	0.34	4.3	4.5	0.0	0.05	0.02	0.06	5.47e-03	2d8/15 L=43	30,140,138
23	ok,ok	0.0	0.34	4.3	4.5	0.0	0.05	0.02	0.06	5.30e-03	2d8/15 L=58	30,0,32
	s=2,m=1	57.7	0.34	4.3	4.5	0.0	0.05	0.02	0.05	9.01e-04	2d8/15 L=58	30,0,0
39	ok,ok	0.0	0.34	4.3	4.5	0.0	0.05	0.02	0.05	7.61e-04	2d8/15 L=58	30,0,0
	s=2,m=1	57.7	0.34	4.3	4.5	0.0	0.05	0.02	0.05	4.50e-03	2d8/15 L=58	30,0,7
49	ok,ok	0.0	0.50	2.3	2.3	0.0	0.15	0.10	0.18	0.01	2d8/15 L=50	30,0,7
	s=3,m=1	57.7	0.50	2.3	2.3	0.0	0.15	0.04	0.19	0.03	2d8/20 L=8	124,0,7
55	ok,ok	0.0	0.50	2.3	2.3	0.0	0.15	0.04	0.05	5.60e-03	2d8/20 L=90	124,0,17
	s=3,m=1	90.0	0.50	2.3	2.3	0.0	0.15	0.04	0.05	5.60e-03	2d8/20 L=90	124,0,8
50	ok,ok	0.0	0.50	2.3	2.3	0.0	0.15	0.04	0.15	0.03	2d8/20 L=8	124,0,7

	s=3,m=1	57.7	0.50	2.3	2.3	0.0	0.15	0.10	0.15	0.01	2d8/15 L=50	30,0,7
40	ok,ok	0.0	0.34	4.3	4.5	0.0	0.05	0.02	0.04	4.50e-03	2d8/15 L=58	30,0,7
	s=2,m=1	57.7	0.34	4.3	4.5	0.0	0.05	0.02	0.04	7.34e-04	2d8/15 L=58	30,0,0
24	ok,ok	0.0	0.34	4.3	4.5	0.0	0.05	0.02	0.04	9.58e-04	2d8/15 L=58	30,0,0
	s=2,m=1	57.7	0.34	4.3	4.5	0.0	0.05	0.02	0.05	5.30e-03	2d8/15 L=58	30,0,32
14	ok,ok	0.0	0.34	4.3	4.5	0.0	0.05	0.02	0.05	5.62e-03	2d8/15 L=43	30,0,0
	s=2,m=1	57.7	0.34	4.3	4.5	0.0	0.05	0.01	0.06	8.93e-03	2d8/15 L=43	145,138,32
15	ok,ok	0.0	0.34	4.3	4.5	0.0	0.05	6.44e-03	0.05	7.87e-03	2d8/15 L=43	151,0,32
	s=2,m=1	57.7	0.34	4.3	4.5	0.0	0.05	0.01	0.04	4.65e-03	2d8/15 L=43	30,140,140
25	ok,ok	0.0	0.34	4.3	4.5	0.0	0.05	0.01	0.04	4.24e-03	2d8/15 L=58	30,0,32
	s=2,m=1	57.7	0.34	4.3	4.5	0.0	0.05	0.02	0.03	1.28e-03	2d8/15 L=58	30,0,0
41	ok,ok	0.0	0.50	2.3	2.3	0.0	0.15	0.11	0.10	3.62e-03	2d8/15 L=50	30,0,0
	s=3,m=1	57.7	0.50	2.3	2.3	0.0	0.15	0.09	0.11	0.01	2d8/20 L=8	30,0,7
51	ok,ok	0.0	0.50	2.3	2.3	0.0	0.15	0.09	0.11	0.01	2d8/20 L=58	30,0,0
	s=3,m=1	57.7	0.50	2.3	2.3	0.0	0.15	0.05	0.11	0.02	2d8/20 L=58	30,0,7
52	ok,ok	0.0	0.50	2.3	2.3	0.0	0.15	0.05	0.07	0.02	2d8/20 L=58	30,0,7
	s=3,m=1	57.7	0.50	2.3	2.3	0.0	0.15	0.09	0.07	0.01	2d8/20 L=58	30,0,0
42	ok,ok	0.0	0.50	2.3	2.3	0.0	0.15	0.09	0.07	0.01	2d8/20 L=8	30,0,7
	s=3,m=1	57.7	0.50	2.3	2.3	0.0	0.15	0.11	0.06	3.35e-03	2d8/15 L=50	30,0,0
26	ok,ok	0.0	0.34	4.3	4.5	0.0	0.05	0.02	0.02	1.29e-03	2d8/15 L=58	30,0,0
	s=2,m=1	57.7	0.34	4.3	4.5	0.0	0.05	0.01	0.02	4.24e-03	2d8/15 L=58	30,0,32
16	ok,ok	0.0	0.34	4.3	4.5	0.0	0.05	0.01	0.03	4.77e-03	2d8/15 L=43	30,0,0
	s=2,m=1	57.7	0.34	4.3	4.5	0.0	0.05	6.53e-03	0.03	7.87e-03	2d8/15 L=43	145,144,32

Trave	**%Af**	**Af inf.**	**Af. sup**	**Af long.**	**x/d**	**V N/M**	**V V/T cls**	**V V/T acc**
	0.50	4.27	4.52	0.0	0.15	0.11	0.19	0.03

VERIFICHE ELEMENTI PARETE E/O GUSCIO IN C.A.

LEGENDA TABELLA VERIFICHE ELEMENTI PARETE E GUSCIO IN C.A.

Per le pareti in c.a., in ottemperanza al cap. 7 del DM 17-01-18, viene effettuata una doppia progettazione: sia come *Singolo Elemento* sia come *Parete Sismica* o *Parete Debolmente Armata.*

Per la progettazione come *Singolo Elemento* di ogni elemento vengono riportati il codice dello stato di verifica con le sigle **Ok e NV,** il rapporto x/d, la verifica per sollecitazioni ultime (verifica a compressione media gli sforzi membranali, verifica a presso-flessionale e verifica a sollecitazioni taglianti), gli sforzi membranali e flessionali, il quantitativo di armatura nella direzione principale e secondaria sia inferiore che superiore e il quantitativo di armatura a taglio.

Per la progettazione come *Parete Sismica* o *Parete Debolmente Armata* vengono riportate invece le caratteristiche geometriche della parete e delle zone dissipative (quest'ultime solo nel caso di parete sismica), i coefficienti di verifica a compressione assiale, pressoflessione e sollecitazioni taglianti.

Inoltre vengono riportate per ogni quota significativa l'armatura principale e secondaria, l'armatura in zona confinata (solo per parete sismica) e non confinata, l'armatura concentrata all'estremità (per pareti debolmente armate), lo sforzo assiale aggiuntivo per q superiore a 2 e i valori di inviluppo di taglio e momento. Per le pareti debolmente armate viene riportato anche lo stato di verifica relativo alla snellezza.

Le azioni derivate dall'analisi, in ogni combinazione di calcolo, sono elaborate come previsto al punto 7.4.4.5.1: traslazione del momento, incremento e variazione diagramma taglio, incremento e decremento sforzo assiale

La progettazione nel caso dei gusci viene effettuata una progettazione come *Singolo Elemento,* riportando in tabella il rapporto x/d, la verifica per sollecitazioni ultime, (verifica a compressione media gli sforzi membranali, verifica a presso-flessionale e verifica a sollecitazioni taglianti) di ogni elemento.

Per ogni elemento, viene riportata inoltre la maglia di armatura necessaria in relazione alle risultanze della progettazione dei nodi dell'elemento stesso. Le quantità di armature necessarie sono armature (disposte rispettivamente in direzione principale e secondaria, inferiore e superiore) distribuite nell'elemento ed espresse in centimetri quadri per sviluppo lineare pari ad un metro.

Nel caso dei gusci viene effettuata, inoltre, la verifica a punzonamento, riportando in tabella il codice dello stato di verifica, il coefficiente di verifica per piastre prive di armature a taglio lungo il perimetro resistente e lungo il perimetro del pilastro, coefficiente di incremento dovuto ai momenti flettenti, fattore di amplificazione per le fondazioni, il fattorei di amplificazione dell'altezza utile per individuare il perimetro di verifica lungo il quale l'armatura a taglio non è richiesta, il quantitativo di armatura a punzonamento, il numero di serie di armature, il numero di braccia di armatura ed il riferimento alla combinazione più gravosa.

Simbologia adottata nelle tabelle di verifica

Per gli elementi con progettazione "*Singolo Elemento …*" è presente una tabella con i simboli di seguito descritti:

Macro Guscio	Numero del macroelemento di tipo guscio (elementi non verticali contigui ed analoghi per proprietà)
Macro Setto	Numero del macroelemento di tipo setto (elementi verticali contigui ed analoghi per proprietà)
Spessore	Spessore della parete
Id Materiale	Codice del materiale assegnato all'elemento
Id Criterio	Codice del criterio di progetto assegnato all'elemento
Progettazione	Sigla tipo di Elemento: - Singolo Elemento; - Singolo Elemento FONDAZIONE; - Singolo Elemento NON DISSIPATIVO

Per gli elementi con progettazione "*Parete Sismica o Parete Debolmente Armata*" è presente una tabella con i simboli di seguito descritti:

Parete	Numero della PARETE SISMICA
Parete PDA	Numero della PARETE DEBOLMENTE ARMATA
H totale	Altezza complessiva della parete
Spessore	Spessore della parete
H critica	Altezza come da punto 7.4.4.5.1 per traslazione momento (solo in Parete Sismica)
H critica V	Altezza della zona dissipativa (solo in Parete Sismica)
L totale	Larghezza di base della parete
L confinata	Lunghezza della zona dissipativa (solo in Parete Sismica)
Verif. N	Verifica di cui al punto 7.4.4.5.1 compressione semplice
Verif. N-M	Verifica di cui al punto 7.4.4.5.1 pressoflessione
Fattore V	Fattore di amplificazione del taglio di cui al punto 7.4.4.5.1
Diagramma V	Diagramma elaborato per effetto modi superiori come da fig. 7.4.4
Verif. V	Verifica di cui al punto 7.4.4.5.1 taglio (compressione cls, trazione acciaio, scorrimento in zona critica) (solo in Parete Sismica)
Verifica Snellezza	Verifica di cui al punto 7.4.4.5.1 limitazione compressione per prevenire l'instabilità (solo in Parete Debolmente Armata)
Prog. composta	Sigla per la progettazione composta

Per le verifiche degli elementi con progettazione "*Singolo Elemento …*" e *Progettazione Composta* è presente una tabella con i simboli di seguito descritti:

Nodo	numero del nodo
Stato	codice di verifica dell'elemento **ok** o **NV**
x/d	rapporto tra posizione dell'asse neutro e altezza utile alla rottura della sezione (per sola flessione)
V N/M	Verifica delle sollecitazioni Normali (momento e sforzo normale)

Ver. rid	Rapporto Nd/Nu (Nu ottenuto con riduzione del 25% di fcd)
Af pr+	quantità di armatura richiesta in direzione principale relativa alla faccia positiva (estradosso piastre) (valore derivante da calcolo o minimo normativo)
Af pr-	quantità di armatura richiesta in direzione principale relativa alla faccia negativa (intradosso piastre) (valore derivante da calcolo o minimo normativo)
Af sec+	quantità di armatura richiesta in direzione secondaria relativa alla faccia positiva (estradosso piastre) (valore derivante da calcolo o minimo normativo)
Af sec-	quantità di armatura richiesta in direzione secondaria relativa alla faccia negativa (intradosso piastre) (valore derivante da calcolo o minimo normativo)
Nz No Nzo	Sforzi membranali per pareti e\o setti verticali
Mz Mo Mzo	Sforzi flessionali per pareti e\o setti verticali
Nx Ny Nxy	Sforzi membranali per gusci orizzontali
Mx Mx Mxy	Sforzi flessionali per gusci orizzontali

Nodo	numero del nodo
Stato	codice di verifica dell'elemento **ok** o **NV**
Max tau	Tensione tangenziale Massima
Ver V pr	Verifica a taglio nella direzione principale lato calcestruzzo
Ver V sec	Verifica a taglio nella direzione secondaria lato calcestruzzo
Af V pr	Armatura nella direzione principale
V pr-	Verifica dell'armatura nella direzione principale
Af V sec	Armatura nella direzione secondaria
V sec-	Verifica dell'armatura nella direzione secondaria

Per le verifiche degli elementi con progettazione "*Parete Sismica o Parete Debolmente Armata*", oltre alla tabella con le verifiche per gli elementi con progettazione "*Singolo Elemento …*", è presente una tabella con i simboli di seguito descritti:

Quota	Ascissa verticale di riferimento
Af conf.	Numero e diametro armatura presente in una zona confinata
Af std	Diametro e passo armatura in zona non confinata (doppia maglia)
Af estremi	Diametro dei ferri di estremità del pannello; se posto uguale 0, viene utilizzato il diametro standard
Af V (ori)	Diametro e passo armatura orizzontale (doppia maglia)
Ver. N	Rapporto tra azione di calcolo e resistenza a compressione (normalizzato a 1 in quanto da confrontare con 40% in CDB e 35 % in CDA)
Ver. N/M	Rapporto tra azione di calcolo e resistenza a pressoflessione
Ver. V acc(7)	Rapporto tra azione di calcolo e resistenza a taglio-trazione per alfaS minore di 2 secondo paragrafo 7.4.4.5.1
Ver. V cls	Rapporto tra azione di calcolo e resistenza a taglio-compressione
Ver. V acc	Rapporto tra azione di calcolo e resistenza a taglio-trazione
Ver. V scorr.	Rapporto tra azione di calcolo e resistenza a taglio scorrimento
N add	Sforzo assiale di cui al punto 7.4.4.5.1 da sommare e sottrarre nelle verifiche quando q supera 2
N invil M invil	Inviluppo del Momento e Sforzo Normale come al punto 7.4.4.5.1 (informativo) (solo in Parete Sismica)

Quota	Ascissa verticale di riferimento
N v.N	Valore dello sforzo assiale per cui Ver. N attinge il massimo valore
N v.M/N, M v.M/N	Valore dello sforzo assiale e momento per cui Ver. N/M attinge il massimo valore
N v.M/N, M v.M/N Mo v.M/N	Valore dello sforzo assiale e dei momenti per cui Ver. N/M attinge il massimo valore (per le pareti estese debolmente armate)
N v.Vcls, V v.Vcls,	Valore dello sforzo assiale e taglio per cui Ver. V. cls attinge il massimo valore
N v.Vacc, M v.Vacc, V v.Vacc,	Valore dello sforzo assiale, momento e taglio per cui Ver. V. acc attinge il massimo valore
N v.Vscorr, M v.Vscorr, V v.Vscorr,	Valore dello sforzo assiale, momento e taglio per cui Ver. V. scorr.e
N v.N	Valore dello sforzo assiale per cui Ver. N attinge il massimo valore
N v.M/N, M v.M/N	Valore dello sforzo assiale e momento per cui Ver. N/M attinge il massimo valore
N v.M/N, M v.M/N Mo v.M/N	Valore dello sforzo assiale e dei momenti per cui Ver. N/M attinge il massimo valore (per le pareti estese debolmente armate)
N v.Vcls, V v.Vcls,	Valore dello sforzo assiale e taglio per cui Ver. V. cls attinge il massimo valore

Quota	Ascissa verticale di riferimento
CtgT Vcls	Valore di ctg(teta) adottato nella verifica V compressione cls
Vrsd Vcls	Valore della resistenza a taglio trazione (armatura di calcolo)
Vrcd Vcls	Valore della resistenza a taglio compressione
CtgT Vacc	Valore di ctg(teta) adottato nella verifica V trazione armatura
Vrsd Vacc	Valore della resistenza a taglio trazione (armatura presente)
Vrcd Vacc	Valore della resistenza a taglio compressione
Vdd	Valore del contributo alla resistenza allo scorrimento come da [7.4.20]
Vid	Valore del contributo alla resistenza allo scorrimento come da [7.4.21]
A s.i.	Somma delle aree di armature
Incli.	Angolo di inclinazione delle armature
Dist.	Distanza alla base tra le armature inclinate

Quota	Ascissa verticale di riferimento
V[7.4.16]	Verifica a taglio-trazione dell'armatura dell'anima (7.4.16)
N M V	Sollecitazioni di calcolo della condizione più gravosa
Alfas	Rapporto di Taglio
Vrd,c	Resistenza a taglio degli elementi non armati
VRd,s	Resistenza a taglio nei confronti dello scorrimento

V[7.4.17]	Verifica a taglio-trazione dell'armatura dell'anima (7.4.17)
roH	Rapporto tra l'armatura orizzontale e l'area della sezione relativa di calcestruzzo
roV	Rapporto tra l'armatura verticale e l'area della sezione relativa di calcestruzzo
roN	Sforzo normale adimensionalizzato Ned/(bw fyd)

Per la verifica a *Punzonamento* è presente una tabella con i simboli di seguito descritti:

Nodo	numero del nodo
Stato	codice di verifica dell'elemento **ok** o **NV**
V. 6.47	Fattore di sicurezza per la verifica per piastre prive di armature a taglio lungo il perimetro resistente U1
V. 6.53	Fattore di sicurezza per la verifica per piastre prive di armature a taglio lungo il perimetro del pilastro U0
Beta	Fattore di incremento dovuto ai momenti flettenti
f. a fon	fattore di amplificazione per le fondazioni (solo per gusci di fondazione)
f. Uout	fattore di amplificazione dell'altezza utile per individuare il perimetro di verifica lungo il quale l'armatura a taglio non è richiesta
Aw tot	Quantitativo di armatura per la verifica di piastre munite di armatura (formula 6.52 dell'EC2)
Asw,min	Quantitativo minimo di armatura previsto dai dettagli costruttivi (formula 9.11 dell'EC2)
n. x serie	Numero di serie di armature
n.ser 0(R)	Numero di braccia delle armatura in direzione 0 (o numero di braccia radiale)
n.ser 90	Numero di braccia delle armatura in direzione 90 (solo se armatura cruciforme)
Rif. cmb	Riferimento combinazioni da cui si generano le verifiche più gravose

Macro Setto	Spessore	Id Materiale	Id Criterio	Progettazione
	cm			
2	15.00	1	1	Singolo elemento NON DISSIPATIVO

Nodo	Stato	x/d	V N/M	ver. rid	Af pr-	Af pr+	Af sec-	Af sec+	N z	N o	N zo	M z	M o	M zo
									kN/ m	kN/ m	kN/ m	kN	kN	kN
297	ok	0.24	0.9	0.3	5.7	5.7	2.5	2.5	-598.7	-115.7	125.2	-3.3	-9.47e-02	0.1
356	ok	0.24	0.8	0.2	5.7	5.7	2.5	2.5	-379.2	-75.2	109.1	-3.2	-0.5	0.1
415	ok	0.24	0.4	5.71e-02	5.7	5.7	2.5	2.5	-98.4	-23.8	-4.2	3.4	0.7	-1.06e-02
474	ok	0.24	0.2	3.85e-02	5.7	5.7	2.5	2.5	-86.7	-20.4	-26.1	2.7	0.6	-1.80e-02
533	ok	0.24	0.2	2.89e-02	5.7	5.7	2.5	2.5	-64.2	-16.3	-4.3	1.0	0.2	4.36e-03
592	ok	0.24	0.1	2.85e-02	5.7	5.7	2.5	2.5	-31.0	-9.4	23.8	0.4	0.2	-2.02e-02
651	ok	0.24	0.1	6.75e-02	5.7	5.7	2.5	2.5	-158.8	-29.5	-35.9	1.8	0.2	-1.34e-02
768	ok	0.26	1.0	0.2	5.7	6.7	2.5	3.3	-455.1	-5.5	88.4	-3.3	-0.2	-4.99e-02
774	ok	0.24	0.8	0.2	5.7	5.7	2.5	2.5	-369.2	-72.3	88.7	-3.3	-0.5	-0.1
803	ok	0.24	0.4	5.47e-02	5.7	5.7	2.5	2.5	-94.4	21.4	-12.7	3.0	0.6	0.2
832	ok	0.24	0.2	3.45e-02	5.7	5.7	2.5	2.5	-79.3	26.0	-14.1	2.4	0.5	0.2
861	ok	0.24	0.1	2.83e-02	5.7	5.7	2.5	2.5	-68.6	-12.4	-11.7	0.7	0.2	0.2
890	ok	0.24	8.15e-02	3.20e-02	5.7	5.7	2.5	2.5	-64.2	-17.7	-28.7	1.2	0.4	5.80e-02
919	ok	0.24	0.1	5.05e-02	5.7	5.7	2.5	2.5	-109.8	-11.0	-13.5	-0.1	-0.4	0.2
976	ok	0.24	0.3	8.50e-02	5.7	5.7	2.5	2.5	-212.8	-8.2	-12.4	-0.9	-0.4	-1.81e-02
982	ok	0.24	0.4	0.1	5.7	5.7	2.5	2.5	-143.0	-16.2	37.3	1.6	0.3	-0.3
1011	ok	0.24	0.3	4.16e-02	5.7	5.7	2.5	2.5	-62.6	-42.0	47.5	1.4	0.3	-0.3
1040	ok	0.24	0.2	3.70e-02	5.7	5.7	2.5	2.5	-59.2	11.0	-23.0	-1.2	-0.2	0.3
1069	ok	0.24	0.1	2.90e-02	5.7	5.7	2.5	2.5	-54.8	-8.0	-28.1	-1.2	-0.2	0.5
1098	ok	0.24	9.57e-02	3.19e-02	5.7	5.7	2.5	2.5	-60.0	-5.7	-28.6	-0.6	-5.36e-02	0.5
1127	ok	0.24	0.1	3.69e-02	5.7	5.7	2.5	2.5	-91.7	-2.3	-8.7	-0.2	-0.2	0.3
1184	ok	0.24	0.2	5.90e-02	5.7	5.7	2.5	2.5	-148.1	-3.9	4.0	0.1	1.65e-02	-0.1
1190	ok	0.24	0.3	5.98e-02	5.7	5.7	2.5	2.5	-136.9	-21.4	33.3	1.3	0.3	-0.2
1247	ok	0.24	0.2	3.65e-02	5.7	5.7	2.5	2.5	-60.5	-22.0	43.9	1.1	0.2	-0.2
1304	ok	0.24	0.1	3.37e-02	5.7	5.7	2.5	2.5	-64.2	3.9	-24.1	-1.5	-0.3	0.2
1361	ok	0.24	0.1	3.02e-02	5.7	5.7	2.5	2.5	-56.9	-3.8	-28.5	-1.5	-0.3	0.3
1418	ok	0.24	8.39e-02	2.99e-02	5.7	5.7	2.5	2.5	-58.7	-1.7	-25.3	-0.8	-0.2	0.3
1475	ok	0.24	9.23e-02	3.13e-02	5.7	5.7	2.5	2.5	-58.1	-4.0	25.3	0.2	-9.81e-03	-0.3
1532	ok	0.24	0.1	3.97e-02	5.7	5.7	2.5	2.5	-99.8	-1.8	0.1	7.88e-02	6.39e-03	3.04e-02
1538	ok	0.24	0.2	4.29e-02	5.7	5.7	2.5	2.5	-99.0	-8.2	21.1	-1.1	-0.2	-0.2
1567	ok	0.24	0.2	3.25e-02	5.7	5.7	2.5	2.5	-60.6	-16.1	35.2	-1.0	-0.2	-0.2
1596	ok	0.24	0.1	2.42e-02	5.7	5.7	2.5	2.5	-41.8	6.3	-28.2	1.0	0.2	0.2
1625	ok	0.24	0.1	2.65e-02	5.7	5.7	2.5	2.5	-55.0	1.2	-23.4	0.7	0.2	0.2
1654	ok	0.24	0.1	2.71e-02	5.7	5.7	2.5	2.5	-60.8	2.2	-21.6	0.3	0.1	0.2
1683	ok	0.24	9.98e-02	2.74e-02	5.7	5.7	2.5	2.5	-54.4	1.0	-13.8	-7.12e-02	-9.18e-02	0.2
1740	ok	0.24	5.69e-02	3.21e-02	5.7	5.7	2.5	2.5	-80.6	-1.5	0.7	-0.1	-3.47e-02	-1.07e-02
1746	ok	0.24	0.1	3.31e-02	5.7	5.7	2.5	2.5	-77.6	-5.5	15.5	-3.76e-02	-4.80e-02	-0.2
1775	ok	0.24	0.2	2.85e-02	5.7	5.7	2.5	2.5	-45.2	-8.2	28.9	1.2	0.3	-0.2
1804	ok	0.24	0.1	2.24e-02	5.7	5.7	2.5	2.5	-23.0	-6.7	30.3	0.8	0.2	-0.2
1833	ok	0.24	0.1	2.56e-02	5.7	5.7	2.5	2.5	-45.5	1.8	-27.7	-0.8	-0.1	0.2
1862	ok	0.24	0.1	2.50e-02	5.7	5.7	2.5	2.5	-44.2	2.3	-25.2	-0.3	-4.74e-02	0.3
1891	ok	0.24	9.73e-02	2.35e-02	5.7	5.7	2.5	2.5	-41.6	-1.8	26.7	4.34e-02	-7.93e-02	-0.3
1948	ok	0.24	8.64e-02	2.70e-02	5.7	5.7	2.5	2.5	-67.7	-1.2	0.3	4.80e-02	2.18e-02	-9.06e-02
1954	ok	0.24	0.1	2.73e-02	5.7	5.7	2.5	2.5	-67.0	-5.9	6.8	-0.2	-4.00e-02	8.07e-03
2011	ok	0.24	0.2	2.37e-02	5.7	5.7	2.5	2.5	-39.9	-5.9	23.7	-0.9	-0.2	-0.1
2068	ok	0.24	0.1	2.30e-02	5.7	5.7	2.5	2.5	-36.9	0.5	-32.3	-1.3	-0.3	0.1
2125	ok	0.24	0.1	2.43e-02	5.7	5.7	2.5	2.5	-30.3	1.0	-27.9	1.0	0.2	0.1
2182	ok	0.24	0.1	2.18e-02	5.7	5.7	2.5	2.5	-34.6	-1.2	-20.9	0.5	0.1	0.1

2239	ok	0.24	9.96e-02	2.27e-02	5.7	5.7	2.5	2.5	-37.6	-3.2	24.6	0.2	-8.82e-03	-0.2
2296	ok	0.24	5.97e-02	2.03e-02	5.7	5.7	2.5	2.5	-46.5	-0.1	0.5	7.02e-02	-0.3	4.12e-02
2302	ok	0.24	7.78e-02	2.17e-02	5.7	5.7	2.5	2.5	-44.2	-1.0	-5.5	9.80e-02	-6.23e-02	0.4
2331	ok	0.24	0.1	2.09e-02	5.7	5.7	2.5	2.5	-39.4	-4.2	23.9	-1.2	-0.3	-0.2
2360	ok	0.24	0.1	1.87e-02	5.7	5.7	2.5	2.5	-26.3	-2.6	25.8	-0.8	-0.2	-0.2
2389	ok	0.24	0.1	1.93e-02	5.7	5.7	2.5	2.5	-30.1	-3.0	22.0	-0.8	-0.2	-0.3
2418	ok	0.24	0.1	1.92e-02	5.7	5.7	2.5	2.5	-32.0	-3.0	24.5	-0.3	-5.37e-02	-0.3
2447	ok	0.24	0.1	1.95e-02	5.7	5.7	2.5	2.5	-30.6	-1.1	26.6	-1.64e-02	-7.14e-02	-0.3
2504	ok	0.24	5.74e-02	1.93e-02	5.7	5.7	2.5	2.5	-46.3	1.13e-02	-0.1	-2.0	5.62e-02	-0.1
2510	ok	0.24	7.34e-02	2.05e-02	5.7	5.7	2.5	2.5	-45.7	-0.9	-9.5	-2.4	-0.4	0.3
2539	ok	0.24	0.1	2.02e-02	5.7	5.7	2.5	2.5	-40.2	-3.0	-21.3	-2.2	-0.5	0.4
2568	ok	0.24	0.1	1.88e-02	5.7	5.7	2.5	2.5	-32.4	-1.5	-19.0	-1.6	-0.4	0.4
2597	ok	0.24	0.1	1.92e-02	5.7	5.7	2.5	2.5	-30.0	-0.6	-27.8	-1.0	-0.2	0.4
2626	ok	0.24	0.1	1.85e-02	5.7	5.7	2.5	2.5	-14.9	0.7	-25.1	-0.4	-9.24e-02	0.4
2655	ok	0.24	0.1	1.84e-02	5.7	5.7	2.5	2.5	-26.7	-1.8	25.9	-0.1	-5.87e-02	-0.3
2712	ok	0.24	9.67e-02	1.98e-02	5.7	5.7	2.5	2.5	-41.0	0.4	0.4	2.0	0.4	0.8
2718	ok	0.24	0.1	2.12e-02	5.7	5.7	2.5	2.5	-33.6	1.4	2.4	2.6	0.5	1.0
2775	ok	0.24	0.1	2.06e-02	5.7	5.7	2.5	2.5	-37.8	-3.5	-7.8	-2.5	-0.5	0.3
2832	ok	0.24	0.1	1.95e-02	5.7	5.7	2.5	2.5	-21.1	-0.9	-23.9	1.9	0.4	0.2
2889	ok	0.24	0.1	1.93e-02	5.7	5.7	2.5	2.5	-12.1	-0.2	-19.1	1.3	0.3	0.2
2946	ok	0.24	0.1	1.85e-02	5.7	5.7	2.5	2.5	-14.2	-0.6	-23.7	-0.6	-0.1	0.2
3003	ok	0.24	0.1	1.79e-02	5.7	5.7	2.5	2.5	-24.2	-2.4	24.8	0.2	-1.28e-02	-0.2
3060	ok	0.24	5.83e-02	1.90e-02	5.7	5.7	2.5	2.5	-35.9	-4.63e-02	-0.1	2.0	-5.26e-02	-0.1
3066	ok	0.24	9.40e-02	2.09e-02	5.7	5.7	2.5	2.5	-37.8	-0.7	-1.1	2.3	6.26e-03	-0.2
3095	ok	0.24	0.1	1.72e-02	5.7	5.7	2.5	2.5	-24.1	-6.0	-23.3	1.5	0.3	0.2
3124	ok	0.24	0.1	1.46e-02	5.7	5.7	2.5	2.5	-20.3	-2.3	-22.6	1.7	0.3	0.3
3153	ok	0.24	0.1	1.53e-02	5.7	5.7	2.5	2.5	-11.6	-1.4	-19.7	1.1	0.2	0.4
3182	ok	0.24	0.1	1.56e-02	5.7	5.7	2.5	2.5	-14.7	-1.3	29.2	-0.3	-6.05e-02	-0.3
3211	ok	0.24	0.1	1.60e-02	5.7	5.7	2.5	2.5	-22.2	-1.2	24.9	5.43e-02	-4.15e-02	-0.3
3268	ok	0.24	8.14e-02	2.75e-02	5.7	5.7	2.5	2.5	-68.9	-1.4	-3.4	-1.1	2.14e-02	6.26e-02
3274	ok	0.24	0.1	2.96e-02	5.7	5.7	2.5	2.5	-68.2	-8.6	-19.3	-1.1	-0.2	0.3
3303	ok	0.24	0.1	1.80e-02	5.7	5.7	2.5	2.5	-24.7	-11.8	-22.8	-1.3	-0.3	0.3
3332	ok	0.24	0.1	1.42e-02	5.7	5.7	2.5	2.5	-18.9	-5.1	-18.7	-1.6	-0.3	0.4
3361	ok	0.24	0.1	1.36e-02	5.7	5.7	2.5	2.5	-17.6	-0.3	-21.4	-1.2	-0.3	0.4
3390	ok	0.24	0.1	1.51e-02	5.7	5.7	2.5	2.5	-12.4	-0.6	27.2	0.4	0.1	-0.3
3419	ok	0.24	0.1	1.63e-02	5.7	5.7	2.5	2.5	-20.2	-2.3	25.8	-6.70e-02	-7.02e-02	-0.3
3482	ok	0.24	0.1	3.45e-02	5.7	5.7	2.5	2.5	-86.5	-1.9	4.3	1.8	0.4	0.2
3488	ok	0.24	0.2	4.44e-02	5.7	5.7	2.5	2.5	-92.8	-4.9	8.7	1.7	0.4	0.6
3545	ok	0.24	0.2	1.80e-02	5.7	5.7	2.5	2.5	11.4	-3.0	-30.2	1.5	0.4	0.4
3602	ok	0.24	0.1	1.30e-02	5.7	5.7	2.5	2.5	-17.9	-6.0	-18.7	-1.9	-0.4	0.3
3659	ok	0.24	0.1	1.37e-02	5.7	5.7	2.5	2.5	-19.3	-5.0	-14.1	-1.4	-0.3	0.3
3716	ok	0.24	9.74e-02	1.47e-02	5.7	5.7	2.5	2.5	-12.3	-1.0	28.4	0.2	4.52e-02	-0.2
3773	ok	0.24	9.33e-02	1.59e-02	5.7	5.7	2.5	2.5	-19.0	-1.2	17.4	0.2	-2.48e-02	-0.2
3860	ok	0.24	0.7	8.35e-02	5.7	5.7	2.5	2.5	-194.0	-4.7	-54.3	-3.8	-1.1	0.9
3866	ok	0.24	0.5	6.96e-02	5.7	5.7	2.5	2.5	-142.8	23.9	-36.9	-2.6	-0.7	2.0
3895	ok	0.24	0.3	2.82e-02	5.7	5.7	2.5	2.5	16.3	-17.8	-29.3	0.9	0.4	0.3
3924	ok	0.24	0.2	1.11e-02	5.7	5.7	2.5	2.5	1.5	6.7	11.8	1.4	0.3	-0.3
3953	ok	0.24	0.1	7.08e-03	5.7	5.7	2.5	2.5	-3.8	6.8	13.1	0.6	0.2	-0.3
3982	ok	0.24	9.37e-02	8.51e-03	5.7	5.7	2.5	2.5	-6.6	3.7	15.4	0.2	-3.04e-02	-0.3
4011	ok	0.24	7.40e-02	1.20e-02	5.7	5.7	2.5	2.5	-19.6	-0.5	16.7	0.1	-3.95e-02	-0.2
4371	ok	0.31	1.0	0.4	11.1	17.8	5.3	10.5	-1102.9	-241.1	-367.7	-21.2	-2.1	-1.4
4377	ok	0.41	1.0	0.2	24.8	23.2	11.5	11.0	-321.2	-135.3	-403.4	-47.5	-7.3	-8.7
4406	ok	0.24	0.6	3.67e-02	5.7	5.7	2.5	2.5	-91.0	-26.2	8.5	5.5	1.1	-6.44e-02
4435	ok	0.24	0.1	7.30e-03	5.7	5.7	2.5	2.5	4.4	14.6	10.6	1.8	0.4	-6.66e-03
4464	ok	0.24	0.1	6.71e-03	5.7	5.7	2.5	2.5	-2.3	14.3	12.1	1.3	0.3	-4.44e-02
4493	ok	0.24	8.67e-02	7.46e-03	5.7	5.7	2.5	2.5	-6.2	2.7	10.7	0.4	4.63e-02	-0.1
4522	ok	0.24	6.26e-02	1.02e-02	5.7	5.7	2.5	2.5	-8.6	0.5	12.8	-0.3	-0.1	-0.2
4580	ok	0.31	1.0	0.5	11.4	14.4	6.7	4.7	-1247.3	-376.9	-440.5	-22.5	1.5	0.4
4639	ok	0.38	1.0	0.2	20.0	19.2	4.2	8.1	-213.4	-109.8	-319.4	-45.4	-2.6	-4.7
4698	ok	0.24	0.6	3.45e-02	5.7	5.7	2.5	2.5	-85.8	0.9	8.4	4.9	1.1	0.3
4757	ok	0.24	0.2	8.95e-03	5.7	5.7	2.5	2.5	6.9	21.8	8.8	1.7	0.4	7.90e-02
4816	ok	0.24	0.1	8.05e-03	5.7	5.7	2.5	2.5	-2.2	18.7	11.9	1.2	0.3	2.08e-02
4875	ok	0.24	8.60e-02	6.28e-03	5.7	5.7	2.5	2.5	-4.8	6.4	8.9	0.3	9.74e-02	6.42e-03
4934	ok	0.24	5.50e-02	7.23e-03	5.7	5.7	2.5	2.5	-10.7	4.0	11.9	-0.1	-1.05e-02	-7.55e-02

Nodo	**x/d**	**V N/M**	**ver. rid**	**Af pr-**	**Af pr+**	**Af sec-**	**Af sec+**	**N z**	**N o**	**N zo**	**M z**	**M o**	**M zo**
								-1247.34	-376.85	-440.54	-47.47	-7.33	-8.69
	0.41	1.00	0.49	24.81	23.22	11.46	10.98	16.30	25.99	125.25	5.47	1.50	1.99

Nodo	**Stato**	**Max tau**	**Ver V pr**	**Ver V sec**	**Af V pr**	**Af V sec**	**V pr**	**V sec**
		daN/cm2					kN/ m	kN/ m
297	ok	1.65						
356	ok	1.56						
415	ok	1.04						
474	ok	0.69						

533	ok	0.46
592	ok	0.49
651	ok	1.54
768	ok	2.22
774	ok	1.18
803	ok	1.01
832	ok	0.79
861	ok	0.49
890	ok	0.62
919	ok	0.72
976	ok	2.20
982	ok	1.15
1011	ok	0.94
1040	ok	0.77
1069	ok	0.51
1098	ok	0.34
1127	ok	0.34
1184	ok	1.29
1190	ok	1.14
1247	ok	0.96
1304	ok	0.67
1361	ok	0.51
1418	ok	0.28
1475	ok	0.47
1532	ok	1.78
1538	ok	0.83
1567	ok	0.72
1596	ok	0.56
1625	ok	0.35
1654	ok	0.29
1683	ok	0.38
1740	ok	1.77
1746	ok	0.84
1775	ok	0.73
1804	ok	0.56
1833	ok	0.37
1862	ok	0.24
1891	ok	0.34
1948	ok	0.68
1954	ok	0.93
2011	ok	0.75
2068	ok	0.52
2125	ok	0.37
2182	ok	0.23
2239	ok	0.44
2296	ok	1.87
2302	ok	0.90
2331	ok	0.77
2360	ok	0.59
2389	ok	0.38
2418	ok	0.27
2447	ok	0.37
2504	ok	1.86
2510	ok	0.89
2539	ok	0.77
2568	ok	0.59
2597	ok	0.37
2626	ok	0.24
2655	ok	0.34
2712	ok	0.70
2718	ok	0.91
2775	ok	0.78
2832	ok	0.53
2889	ok	0.40
2946	ok	0.23
3003	ok	0.41
3060	ok	1.72
3066	ok	0.83
3095	ok	0.75
3124	ok	0.60
3153	ok	0.41
3182	ok	0.26
3211	ok	0.37
3268	ok	1.73
3274	ok	0.80
3303	ok	0.75
3332	ok	0.60
3361	ok	0.39
3390	ok	0.29

3419	ok	0.29						
3482	ok	1.20						
3488	ok	2.32						
3545	ok	1.28						
3602	ok	0.90						
3659	ok	0.51						
3716	ok	0.26						
3773	ok	0.35						
3860	ok Av	6.87	0.31	9.19e-03	7.8	0.2	75.6	2.2
3866	ok	2.45						
3895	ok	1.33						
3924	ok	1.24						
3953	ok	0.52						
3982	ok	0.18						
4011	ok	0.32						
4371	ok Av	12.31	0.55	0.08	13.9	1.9	134.5	18.3
4377	ok Av	14.65	0.66	0.09	16.6	2.1	160.7	20.6
4406	ok	3.37						
4435	ok	1.17						
4464	ok	0.41						
4493	ok	0.27						
4522	ok	0.36						
4580	ok Av	10.96	0.47	0.18	11.6	4.5	112.5	43.7
4639	ok Av	17.30	0.77	0.14	19.3	3.5	187.2	34.2
4698	ok	3.45						
4757	ok	0.92						
4816	ok	0.43						
4875	ok	0.24						
4934	ok	0.41						
Nodo		**Max tau**	**Ver V pr**	**Ver V sec**	**Af V pr**	**Af V sec**	**V pr**	**V sec**
		17.30	0.77	0.18	19.33	4.51	187.19	43.73

Macro Setto	Spessore	Id Materiale	Id Criterio	Progettazione
	cm			
3	15.00	1	1	Singolo elemento NON DISSIPATIVO

Nodo	Stato	x/d	V N/M	ver. rid	Af pr-	Af pr+	Af sec-	Af sec+	N z	N o	N zo	M z	M o	M zo
									kN/ m	kN/ m	kN/ m	kN	kN	kN
307	ok	0.24	0.7	0.3	5.7	5.7	2.5	2.5	-642.7	-113.4	126.3	-0.1	-1.13e-02	8.26e-03
366	ok	0.24	0.6	0.2	5.7	5.7	2.5	2.5	-427.2	-84.5	130.7	-9.73e-02	1.84e-02	3.60e-03
425	ok	0.24	0.4	4.98e-02	5.7	5.7	2.5	2.5	-93.0	-24.8	1.5	3.6	0.8	-5.73e-02
484	ok	0.24	0.2	3.47e-02	5.7	5.7	2.5	2.5	-78.2	-21.1	-23.0	2.7	0.6	-5.61e-02
543	ok	0.24	0.2	2.49e-02	5.7	5.7	2.5	2.5	-59.1	-11.0	9.4	1.8	0.4	-6.66e-02
602	ok	0.24	0.1	2.34e-02	5.7	5.7	2.5	2.5	-44.6	-9.7	-9.2	0.9	0.2	-7.04e-02
661	ok	0.24	5.34e-02	3.11e-02	5.7	5.7	2.5	2.5	-56.0	-15.3	-22.4	0.1	-4.26e-02	-4.22e-02
769	ok	0.25	1.0	0.2	5.7	6.2	2.5	3.0	-449.2	-9.07e-02	75.3	-0.4	-3.26e-02	-4.55e-03
779	ok	0.24	0.7	0.2	5.7	5.7	2.5	2.5	-380.2	-67.5	86.5	-0.4	-8.49e-02	-5.28e-03
808	ok	0.24	0.4	4.89e-02	5.7	5.7	2.5	2.5	-91.9	13.0	-5.0	3.4	0.7	0.2
837	ok	0.24	0.2	3.17e-02	5.7	5.7	2.5	2.5	-72.9	20.5	-10.3	2.5	0.6	0.2
866	ok	0.24	9.83e-02	2.40e-02	5.7	5.7	2.5	2.5	-60.1	-8.6	-3.3	1.7	0.3	0.2
895	ok	0.24	5.23e-02	2.13e-02	5.7	5.7	2.5	2.5	-42.7	-5.0	1.8	0.8	0.2	0.2
929	ok	0.24	6.39e-02	2.55e-02	5.7	5.7	2.5	2.5	-54.5	-14.0	-14.3	-3.67e-02	-0.2	0.2
977	ok	0.24	0.2	8.98e-02	5.7	5.7	2.5	2.5	-224.8	-6.0	-13.6	-0.1	-6.63e-02	5.39e-03
987	ok	0.24	0.4	0.1	5.7	5.7	2.5	2.5	-244.8	-32.2	57.2	-0.2	-3.06e-02	-2.96e-02
1016	ok	0.24	0.3	4.36e-02	5.7	5.7	2.5	2.5	-79.0	-41.8	42.3	0.2	5.57e-02	-2.01e-02
1045	ok	0.24	0.2	3.26e-02	5.7	5.7	2.5	2.5	-52.6	8.2	-11.4	-1.8	-0.3	0.3
1074	ok	0.24	0.1	2.38e-02	5.7	5.7	2.5	2.5	-54.4	-3.9	-7.7	-1.2	-0.3	0.3
1103	ok	0.24	5.83e-02	2.19e-02	5.7	5.7	2.5	2.5	-48.2	-0.8	-10.2	-0.5	-0.1	0.3
1137	ok	0.24	5.58e-02	2.11e-02	5.7	5.7	2.5	2.5	-50.0	0.4	-6.6	-6.35e-03	7.43e-03	0.3
1185	ok	0.24	0.3	6.46e-02	5.7	5.7	2.5	2.5	-162.2	-4.5	4.8	0.1	4.32e-02	-0.1
1200	ok	0.24	0.3	6.57e-02	5.7	5.7	2.5	2.5	-158.5	-23.7	29.2	3.09e-02	2.27e-02	-8.44e-03
1257	ok	0.24	0.2	3.94e-02	5.7	5.7	2.5	2.5	-77.6	-21.7	38.3	1.22e-02	4.23e-03	-1.03e-02
1314	ok	0.24	0.1	2.86e-02	5.7	5.7	2.5	2.5	-59.4	-0.5	-11.8	-2.0	-0.4	9.05e-02
1371	ok	0.24	6.89e-02	2.36e-02	5.7	5.7	2.5	2.5	-57.4	-3.6	-8.1	-1.3	-0.3	0.1
1428	ok	0.24	4.70e-02	2.15e-02	5.7	5.7	2.5	2.5	-42.1	-3.2	-14.1	0.6	0.1	8.95e-02
1485	ok	0.24	3.00e-02	1.98e-02	5.7	5.7	2.5	2.5	-47.9	-1.4	-9.0	0.1	1.10e-02	9.72e-02
1533	ok	0.24	0.1	4.17e-02	5.7	5.7	2.5	2.5	-104.7	-1.5	-1.7	-0.1	5.59e-03	4.12e-02
1543	ok	0.24	0.2	4.60e-02	5.7	5.7	2.5	2.5	-112.8	-6.1	16.7	-0.3	-6.94e-02	-9.19e-03
1572	ok	0.24	0.1	3.23e-02	5.7	5.7	2.5	2.5	-69.8	-14.7	26.1	-0.3	-5.73e-02	-2.00e-02
1601	ok	0.24	0.1	2.20e-02	5.7	5.7	2.5	2.5	-39.3	2.9	-15.1	1.9	0.3	0.2
1630	ok	0.24	6.88e-02	2.03e-02	5.7	5.7	2.5	2.5	-45.4	-1.2	-11.5	1.2	0.3	0.3
1659	ok	0.24	4.58e-02	1.89e-02	5.7	5.7	2.5	2.5	-42.8	0.2	-12.9	0.6	0.1	0.2

1693	ok	0.24	2.69e-02	1.87e-02	5.7	5.7	2.5	2.5	-41.7	-1.24e-02	-10.9	7.17e-03	-1.47e-02	0.3
1741	ok	0.24	0.1	3.59e-02	5.7	5.7	2.5	2.5	-90.2	-1.5	0.5	-9.75e-02	-6.74e-02	-3.10e-03
1751	ok	0.24	0.1	3.71e-02	5.7	5.7	2.5	2.5	-91.5	-4.8	11.5	-0.1	-2.44e-02	-2.92e-02
1780	ok	0.24	0.1	2.95e-02	5.7	5.7	2.5	2.5	-65.8	-10.6	22.0	-0.1	-1.35e-02	-1.55e-02
1809	ok	0.24	0.1	2.23e-02	5.7	5.7	2.5	2.5	-36.9	-11.7	19.0	0.2	3.07e-02	-1.37e-02
1838	ok	0.24	8.18e-02	1.93e-02	5.7	5.7	2.5	2.5	-36.7	-0.7	-15.2	-1.2	-0.3	0.3
1867	ok	0.24	5.99e-02	1.83e-02	5.7	5.7	2.5	2.5	-36.6	0.3	-16.0	-0.6	-0.1	0.2
1901	ok	0.24	3.28e-02	1.69e-02	5.7	5.7	2.5	2.5	-40.0	0.3	-9.5	-2.50e-03	3.31e-02	0.3
1949	ok	0.24	0.2	3.27e-02	5.7	5.7	2.5	2.5	-80.0	-1.3	-0.5	0.2	5.44e-02	-0.1
1964	ok	0.24	0.2	3.33e-02	5.7	5.7	2.5	2.5	-77.9	-8.8	5.1	7.03e-02	2.82e-02	-3.82e-03
2021	ok	0.24	0.1	2.65e-02	5.7	5.7	2.5	2.5	-59.0	-9.1	17.8	5.56e-02	1.20e-02	-1.03e-02
2078	ok	0.24	9.76e-02	2.23e-02	5.7	5.7	2.5	2.5	-37.5	-5.9	22.7	9.08e-03	5.22e-04	-5.34e-03
2135	ok	0.24	7.20e-02	1.86e-02	5.7	5.7	2.5	2.5	-27.2	-1.2	-17.6	1.3	0.3	8.95e-02
2192	ok	0.24	5.31e-02	1.71e-02	5.7	5.7	2.5	2.5	-38.0	-2.9	-13.2	-0.6	-0.1	8.30e-02
2249	ok	0.24	4.12e-02	1.50e-02	5.7	5.7	2.5	2.5	-36.0	-3.5	-7.3	-0.1	-2.85e-03	9.40e-02
2297	ok	0.24	0.1	2.58e-02	5.7	5.7	2.5	2.5	-55.0	-0.8	0.4	-0.1	5.70e-03	4.04e-02
2307	ok	0.24	0.1	2.72e-02	5.7	5.7	2.5	2.5	-60.0	-1.0	7.8	-0.3	-7.16e-02	-8.29e-03
2336	ok	0.24	0.1	2.33e-02	5.7	5.7	2.5	2.5	-46.2	-4.4	15.2	-0.3	-5.97e-02	-1.91e-02
2365	ok	0.24	9.86e-02	1.83e-02	5.7	5.7	2.5	2.5	-31.3	-3.8	16.0	-0.2	-4.52e-02	-1.39e-02
2394	ok	0.24	7.86e-02	1.47e-02	5.7	5.7	2.5	2.5	-28.3	-2.3	-15.5	1.2	0.3	0.3
2423	ok	0.24	6.00e-02	1.49e-02	5.7	5.7	2.5	2.5	-30.1	-1.9	-15.6	0.6	0.1	0.3
2457	ok	0.24	4.95e-02	1.44e-02	5.7	5.7	2.5	2.5	-31.8	-2.1	-11.7	-2.02e-02	-1.51e-02	0.2
2505	ok	0.24	0.1	2.45e-02	5.7	5.7	2.5	2.5	-49.8	-0.6	7.18e-02	6.21e-03	0.5	2.54e-02
2515	ok	0.24	0.1	2.59e-02	5.7	5.7	2.5	2.5	-52.0	-1.6	0.7	-8.86e-03	0.5	-2.07e-02
2544	ok	0.24	0.1	2.26e-02	5.7	5.7	2.5	2.5	-37.4	-1.5	13.4	0.2	5.15e-02	-1.54e-02
2573	ok	0.24	0.1	1.76e-02	5.7	5.7	2.5	2.5	-28.8	-2.9	15.0	0.2	3.12e-02	-1.32e-02
2602	ok	0.24	7.71e-02	1.42e-02	5.7	5.7	2.5	2.5	-24.1	-2.6	-15.0	-1.2	-0.3	0.3
2631	ok	0.24	5.71e-02	1.39e-02	5.7	5.7	2.5	2.5	-23.7	-2.3	-14.6	-0.6	-0.1	0.3
2665	ok	0.24	5.10e-02	1.23e-02	5.7	5.7	2.5	2.5	-22.5	0.4	-10.3	1.04e-02	5.81e-02	0.2
2713	ok	0.24	0.2	2.65e-02	5.7	5.7	2.5	2.5	-53.8	-0.3	-1.5	-0.2	-1.40e-02	-1.47e-02
2728	ok	0.24	0.2	2.80e-02	5.7	5.7	2.5	2.5	-43.7	-4.2	-10.5	3.0	0.6	0.1
2785	ok	0.24	0.1	2.15e-02	5.7	5.7	2.5	2.5	-29.9	-3.5	-9.5	2.8	0.6	0.2
2842	ok	0.24	0.1	1.69e-02	5.7	5.7	2.5	2.5	-15.7	-3.7	-17.4	2.1	0.4	6.84e-02
2899	ok	0.24	8.07e-02	1.38e-02	5.7	5.7	2.5	2.5	-12.6	-3.5	-12.1	1.4	0.3	9.16e-02
2956	ok	0.24	6.12e-02	1.24e-02	5.7	5.7	2.5	2.5	-24.5	-4.1	-12.2	-0.6	-0.1	8.78e-02
3013	ok	0.24	4.96e-02	1.01e-02	5.7	5.7	2.5	2.5	-22.0	-2.8	-8.2	-9.63e-02	1.38e-02	9.83e-02
3061	ok	0.24	0.1	2.31e-02	5.7	5.7	2.5	2.5	-57.8	-1.8	-1.3	8.28e-02	-0.5	-2.93e-04
3071	ok	0.24	0.1	2.46e-02	5.7	5.7	2.5	2.5	-45.4	-1.1	-11.2	2.8	0.4	0.2
3100	ok	0.24	0.1	1.82e-02	5.7	5.7	2.5	2.5	-30.5	-8.1	-18.5	2.6	0.6	0.3
3129	ok	0.24	0.1	1.20e-02	5.7	5.7	2.5	2.5	-15.2	-7.9	-15.4	1.9	0.4	0.2
3158	ok	0.24	8.91e-02	9.67e-03	5.7	5.7	2.5	2.5	-12.7	-3.8	-12.2	1.2	0.2	0.3
3187	ok	0.24	6.84e-02	9.70e-03	5.7	5.7	2.5	2.5	-17.1	-2.0	-10.3	0.6	0.1	0.3
3221	ok	0.24	4.48e-02	8.79e-03	5.7	5.7	2.5	2.5	-18.0	-1.3	-8.8	-7.57e-02	7.11e-04	0.3
3269	ok	0.24	0.1	3.19e-02	5.7	5.7	2.5	2.5	-79.9	-1.2	-2.9	-2.2	3.58e-02	-0.1
3279	ok	0.24	0.1	3.30e-02	5.7	5.7	2.5	2.5	-78.5	-7.6	-17.6	-2.5	-0.4	0.2
3308	ok	0.24	0.2	1.76e-02	5.7	5.7	2.5	2.5	-25.6	-12.2	-19.5	-2.5	-0.6	0.3
3337	ok	0.24	0.1	1.14e-02	5.7	5.7	2.5	2.5	-6.4	-10.2	-14.2	-1.9	-0.4	0.3
3366	ok	0.24	8.81e-02	8.97e-03	5.7	5.7	2.5	2.5	-11.3	-3.7	-10.2	-8.21e-02	-5.26e-02	0.3
3395	ok	0.24	5.50e-02	8.28e-03	5.7	5.7	2.5	2.5	-12.6	0.2	-7.7	-0.6	-8.20e-02	0.2
3429	ok	0.24	4.72e-02	6.99e-03	5.7	5.7	2.5	2.5	-13.9	0.2	-7.7	1.30e-02	8.09e-02	0.3
3483	ok	0.24	0.2	4.20e-02	5.7	5.7	2.5	2.5	-105.6	-1.5	1.3	2.8	0.6	0.7
3498	ok	0.24	0.3	5.58e-02	5.7	5.7	2.5	2.5	-90.0	-0.2	-5.5	-2.7	-0.4	0.9
3555	ok	0.24	0.2	1.68e-02	5.7	5.7	2.5	2.5	-21.2	-8.7	-19.0	-2.7	-0.5	0.2
3612	ok	0.24	0.1	1.17e-02	5.7	5.7	2.5	2.5	-4.6	-10.5	-11.1	-2.0	-0.4	0.1
3669	ok	0.24	8.70e-02	8.68e-03	5.7	5.7	2.5	2.5	-4.1	2.5	7.7	1.0	0.2	0.1
3726	ok	0.24	4.51e-02	7.52e-03	5.7	5.7	2.5	2.5	-14.3	-2.1	-8.4	-0.7	-0.1	9.12e-02
3783	ok	0.24	4.00e-02	5.03e-03	5.7	5.7	2.5	2.5	-8.6	-0.6	-2.2	-0.1	4.15e-02	9.37e-02
3861	ok	0.24	0.7	9.40e-02	5.7	5.7	2.5	2.5	-220.5	-5.3	-57.3	-0.3	-0.2	0.1
3871	ok	0.24	0.5	8.80e-02	5.7	5.7	2.5	2.5	-195.5	-32.4	-66.1	-0.3	-2.40e-02	0.1
3900	ok	0.24	0.3	2.62e-02	5.7	5.7	2.5	2.5	17.1	-20.2	-39.0	0.4	0.1	5.23e-02
3929	ok	0.24	0.2	8.06e-03	5.7	5.7	2.5	2.5	-6.5	-2.4	6.1	-1.3	-0.3	0.3
3958	ok	0.24	9.11e-02	5.08e-03	5.7	5.7	2.5	2.5	-6.3	-0.8	6.8	0.9	0.2	0.3
3987	ok	0.24	5.10e-02	3.66e-03	5.7	5.7	2.5	2.5	-3.5	-0.6	6.6	0.3	0.1	0.2
4021	ok	0.24	2.64e-02	3.48e-03	5.7	5.7	2.5	2.5	-7.6	9.71e-02	-3.0	-0.1	1.38e-02	0.2
4372	ok	0.36	1.0	0.4	16.5	17.5	7.8	8.0	-1188.8	-234.6	-376.5	-3.4	-0.3	-0.2
4382	ok	0.43	1.0	0.3	29.6	27.8	11.3	9.0	-657.8	-225.0	-501.7	-7.9	-1.2	-1.5
4411	ok	0.24	0.7	3.17e-02	5.7	5.7	2.5	2.5	-79.6	-31.0	2.2	0.8	0.2	2.68e-02
4440	ok	0.24	0.2	6.63e-03	5.7	5.7	2.5	2.5	-7.4	0.4	5.5	-1.5	-0.4	8.27e-02
4469	ok	0.24	0.1	5.06e-03	5.7	5.7	2.5	2.5	-5.3	0.3	7.1	-1.7	-0.4	-2.97e-02
4498	ok	0.24	4.98e-02	3.70e-03	5.7	5.7	2.5	2.5	-3.8	1.9	-5.5	0.4	0.1	-6.76e-02
4532	ok	0.24	3.30e-02	3.43e-03	5.7	5.7	2.5	2.5	-0.2	0.3	-3.0	-0.3	-8.43e-03	-0.1
4590	ok	0.31	1.0	0.6	11.1	11.5	3.3	2.8	-1456.7	-441.3	-522.5	-3.7	0.2	3.20e-02
4649	ok	0.41	1.0	0.2	23.9	22.8	5.9	4.9	-406.9	-121.8	-336.2	-7.6	-0.4	-0.8
4708	ok	0.24	0.7	3.10e-02	5.7	5.7	2.5	2.5	-77.9	-10.5	1.7	0.6	0.2	1.84e-02
4767	ok	0.24	0.2	4.11e-03	5.7	5.7	2.5	2.5	-2.0	4.9	-1.0	-0.4	-7.06e-02	-3.68e-02
4826	ok	0.24	0.1	5.78e-03	5.7	5.7	2.5	2.5	-6.4	2.19e-02	3.8	-1.8	-0.3	-0.2
4885	ok	0.24	4.92e-02	4.43e-03	5.7	5.7	2.5	2.5	-4.3	-0.2	7.2	-0.5	-3.34e-02	-0.1
4944	ok	0.24	3.03e-02	2.52e-03	5.7	5.7	2.5	2.5	0.9	2.9	-2.9	-0.3	6.01e-02	-2.10e-02

Nodo	x/d	V N/M	ver. rid	Af pr-	Af pr+	Af sec-	Af sec+	N z	N o	N zo	M z	M o	M zo
								-1456.65	-441.32	-522.53	-7.95	-1.20	-1.46
	0.43	1.00	0.60	29.56	27.79	11.31	9.05	17.12	20.53	130.66	3.65	0.78	0.88

Nodo	Stato	Max tau	Ver V pr	Ver V sec	Af V pr	Af V sec	V pr	V sec
		daN/cm2					kN/ m	kN/ m
307	ok	2.14						
366	ok	2.12						
425	ok	1.37						
484	ok	0.90						
543	ok	0.63						
602	ok	0.41						
661	ok	0.79						
769	ok	3.00						
779	ok	1.61						
808	ok	1.37						
837	ok	1.06						
866	ok	0.66						
895	ok	0.51						
929	ok	0.72						
977	ok	2.99						
987	ok	1.58						
1016	ok	1.35						
1045	ok	1.05						
1074	ok	0.63						
1103	ok	0.39						
1137	ok	0.46						
1185	ok	1.06						
1200	ok	1.58						
1257	ok	1.34						
1314	ok	0.90						
1371	ok	0.62						
1428	ok	0.34						
1485	ok	0.48						
1533	ok	2.90						
1543	ok	1.51						
1572	ok	1.36						
1601	ok	1.03						
1630	ok	0.65						
1659	ok	0.39						
1693	ok	0.41						
1741	ok	2.90						
1751	ok	1.50						
1780	ok	1.35						
1809	ok	1.03						
1838	ok	0.63						
1867	ok	0.40						
1901	ok	0.40						
1949	ok	0.71						
1964	ok	1.55						
2021	ok	1.36						
2078	ok	0.90						
2135	ok	0.63						
2192	ok	0.34						
2249	ok	0.43						
2297	ok	2.96						
2307	ok	1.55						
2336	ok	1.37						
2365	ok	1.04						
2394	ok	0.65						
2423	ok	0.38						
2457	ok	0.41						
2505	ok	2.96						
2515	ok	1.53						
2544	ok	1.36						
2573	ok	1.04						
2602	ok	0.63						
2631	ok	0.40						
2665	ok	0.42						
2713	ok	0.67						
2728	ok	1.53						
2785	ok	1.34						
2842	ok	0.90						
2899	ok	0.65						
2956	ok	0.34						
3013	ok	0.41						
3061	ok	2.81						

3071	ok	1.49						
3100	ok	1.36						
3129	ok	1.05						
3158	ok	0.67						
3187	ok	0.37						
3221	ok	0.41						
3269	ok	2.81						
3279	ok	1.41						
3308	ok	1.35						
3337	ok	1.04						
3366	ok	0.64						
3395	ok	0.44						
3429	ok	0.41						
3483	ok	1.02						
3498	ok	2.94						
3555	ok	1.94						
3612	ok	1.45						
3669	ok	0.90						
3726	ok	0.37						
3783	ok	0.44						
3861	ok Av	9.03	0.41	7.04e-03	10.3	0.2	99.4	1.7
3871	ok	2.92						
3900	ok	2.01						
3929	ok	1.98						
3958	ok	0.92						
3987	ok	0.33						
4021	ok	0.44						
4372	ok Av	15.01	0.68	0.11	16.9	2.6	162.7	25.4
4382	ok Av	19.22	0.86	0.11	21.7	2.6	209.3	25.6
4411	ok	4.70						
4440	ok	1.95						
4469	ok	0.77						
4498	ok	0.44						
4532	ok	0.67						
4590	ok Av	14.74	0.66	0.12	16.5	2.9	159.2	28.1
4649	ok Av	19.59	0.88	0.10	22.1	2.4	213.7	22.9
4708	ok	4.92						
4767	ok	1.46						
4826	ok	0.73						
4885	ok	0.35						
4944	ok	0.69						
Nodo		**Max tau**	**Ver V pr**	**Ver V sec**	**Af V pr**	**Af V sec**	**V pr**	**V sec**
		19.59	0.88	0.12	22.12	2.90	213.71	28.07

Macro Setto	Spessore	Id Materiale	Id Criterio	Progettazione
	cm			
4	15.00	1	1	Singolo elemento NON DISSIPATIVO

Nodo	Stato	x/d	V N/M	ver. rid	Af pr-	Af pr+	Af sec-	Af sec+	N z	N o	N zo	M z	M o	M zo
									kN/ m	kN/ m	kN/ m	kN	kN	kN
319	ok	0.24	0.6	0.3	5.7	5.7	2.5	2.5	-626.6	-109.3	121.8	-0.4	-1.19e-02	1.22e-02
378	ok	0.24	0.6	0.2	5.7	5.7	2.5	2.5	-414.8	-81.8	126.4	-0.4	2.26e-03	1.08e-02
437	ok	0.24	0.4	4.75e-02	5.7	5.7	2.5	2.5	-88.1	-23.3	2.1	3.6	0.8	-6.16e-02
496	ok	0.24	0.2	3.32e-02	5.7	5.7	2.5	2.5	-74.1	-19.9	-22.8	2.7	0.6	-5.76e-02
555	ok	0.24	0.2	2.40e-02	5.7	5.7	2.5	2.5	-56.7	-10.9	11.5	1.8	0.4	-6.78e-02
614	ok	0.24	0.1	2.35e-02	5.7	5.7	2.5	2.5	-43.4	-9.7	-7.1	0.8	0.2	-7.04e-02
673	ok	0.24	5.16e-02	3.12e-02	5.7	5.7	2.5	2.5	-54.4	-15.4	-22.9	6.28e-02	-9.69e-03	-3.48e-02
770	ok	0.25	1.0	0.2	5.9	6.1	2.7	2.9	-428.0	1.6	69.3	-0.5	-3.54e-02	-8.08e-03
785	ok	0.24	0.7	0.2	5.7	5.7	2.5	2.5	-366.3	-63.8	82.8	-0.5	-9.29e-02	-1.59e-02
814	ok	0.24	0.4	4.67e-02	5.7	5.7	2.5	2.5	-87.9	11.7	-4.4	3.5	0.8	0.2
843	ok	0.24	0.2	3.03e-02	5.7	5.7	2.5	2.5	-69.5	19.4	-10.0	2.6	0.6	0.2
872	ok	0.24	0.1	2.30e-02	5.7	5.7	2.5	2.5	-57.8	-8.5	-1.2	1.7	0.4	0.2
901	ok	0.24	4.70e-02	2.14e-02	5.7	5.7	2.5	2.5	-41.5	-6.8	4.0	0.8	0.2	0.2
941	ok	0.24	5.56e-02	2.55e-02	5.7	5.7	2.5	2.5	-52.7	-13.2	-14.7	1.54e-02	-0.1	0.2
978	ok	0.24	0.2	8.67e-02	5.7	5.7	2.5	2.5	-216.8	-5.3	-13.5	-0.1	-7.48e-02	7.38e-03
993	ok	0.24	0.3	9.99e-02	5.7	5.7	2.5	2.5	-236.3	-30.5	54.1	-0.1	-2.70e-02	-4.75e-02
1022	ok	0.24	0.3	4.20e-02	5.7	5.7	2.5	2.5	-76.9	-40.3	40.2	0.3	7.11e-02	-3.56e-02
1051	ok	0.24	0.2	3.12e-02	5.7	5.7	2.5	2.5	-50.4	7.4	-10.8	-1.9	-0.4	0.3
1080	ok	0.24	0.1	2.29e-02	5.7	5.7	2.5	2.5	-52.3	-4.0	-8.0	-1.3	-0.3	0.3
1109	ok	0.24	6.24e-02	2.18e-02	5.7	5.7	2.5	2.5	-46.7	-1.0	-10.5	-0.6	-0.1	0.3
1149	ok	0.24	6.12e-02	1.99e-02	5.7	5.7	2.5	2.5	-49.3	-1.8	-4.7	-3.67e-02	-5.43e-03	0.3
1186	ok	0.24	0.3	6.28e-02	5.7	5.7	2.5	2.5	-157.7	-4.2	3.7	0.3	5.45e-02	-0.1

1212	ok	0.24	0.3	6.37e-02	5.7	5.7	2.5	2.5	-154.0	-22.9	27.1	0.3	5.81e-02	-1.88e-02
1269	ok	0.24	0.2	3.80e-02	5.7	5.7	2.5	2.5	-75.8	-21.1	36.2	0.2	4.51e-02	-1.53e-02
1326	ok	0.24	0.1	2.75e-02	5.7	5.7	2.5	2.5	-57.2	-0.9	-11.2	-2.0	-0.4	9.13e-02
1383	ok	0.24	6.52e-02	2.28e-02	5.7	5.7	2.5	2.5	-55.3	-3.8	-8.3	-1.3	-0.3	0.1
1440	ok	0.24	4.98e-02	2.14e-02	5.7	5.7	2.5	2.5	-48.6	-1.2	-7.1	-0.6	-0.1	9.99e-02
1497	ok	0.24	2.64e-02	1.93e-02	5.7	5.7	2.5	2.5	-46.0	-3.7	-8.2	0.1	2.09e-02	-1.45e-02
1534	ok	0.24	0.1	4.05e-02	5.7	5.7	2.5	2.5	-101.8	-1.4	-1.9	-0.3	9.21e-03	3.66e-02
1549	ok	0.24	0.2	4.48e-02	5.7	5.7	2.5	2.5	-110.0	-5.6	15.7	-0.4	-7.18e-02	-2.18e-02
1578	ok	0.24	0.1	3.13e-02	5.7	5.7	2.5	2.5	-68.3	-14.2	24.7	-0.3	-7.53e-02	-3.48e-02
1607	ok	0.24	0.1	2.20e-02	5.7	5.7	2.5	2.5	-37.9	2.5	-14.4	1.9	0.4	0.2
1636	ok	0.24	7.08e-02	1.96e-02	5.7	5.7	2.5	2.5	-43.8	-1.4	-11.2	1.3	0.3	0.3
1665	ok	0.24	4.49e-02	1.83e-02	5.7	5.7	2.5	2.5	-41.5	6.52e-02	-12.6	0.6	0.1	0.3
1705	ok	0.24	2.60e-02	1.82e-02	5.7	5.7	2.5	2.5	-40.8	3.32e-02	-10.6	1.40e-03	-5.39e-03	0.3
1742	ok	0.24	0.1	3.51e-02	5.7	5.7	2.5	2.5	-88.2	-1.4	0.4	-4.57e-02	-7.69e-02	-3.79e-03
1757	ok	0.24	0.1	3.62e-02	5.7	5.7	2.5	2.5	-76.1	-0.8	9.3	0.4	7.19e-02	-2.12e-02
1786	ok	0.24	0.1	2.87e-02	5.7	5.7	2.5	2.5	-58.8	-9.1	19.4	0.3	7.50e-02	-3.40e-02
1815	ok	0.24	0.1	2.23e-02	5.7	5.7	2.5	2.5	-35.8	-7.5	20.1	0.2	5.52e-02	-2.79e-02
1844	ok	0.24	8.08e-02	1.86e-02	5.7	5.7	2.5	2.5	-35.4	-0.8	-14.7	-1.3	-0.3	0.3
1873	ok	0.24	5.90e-02	1.77e-02	5.7	5.7	2.5	2.5	-35.5	0.2	-15.4	-0.6	-0.1	0.3
1913	ok	0.24	3.37e-02	1.64e-02	5.7	5.7	2.5	2.5	-36.1	0.7	-9.7	-2.36e-02	3.84e-02	0.3
1950	ok	0.24	0.2	3.30e-02	5.7	5.7	2.5	2.5	-67.3	0.9	2.4	-0.3	-6.57e-02	-0.1
1976	ok	0.24	0.2	3.34e-02	5.7	5.7	2.5	2.5	-57.0	2.4	6.3	-0.3	-7.43e-02	-0.1
2033	ok	0.24	0.1	2.66e-02	5.7	5.7	2.5	2.5	-45.4	-6.4	13.6	-0.3	-5.50e-02	-1.47e-02
2090	ok	0.24	9.76e-02	2.23e-02	5.7	5.7	2.5	2.5	-36.6	-5.8	21.6	0.2	3.38e-02	-8.93e-03
2147	ok	0.24	7.55e-02	1.85e-02	5.7	5.7	2.5	2.5	-26.3	-1.2	-17.2	1.3	0.3	9.21e-02
2204	ok	0.24	5.67e-02	1.66e-02	5.7	5.7	2.5	2.5	-36.9	-2.8	-12.7	-0.6	-0.1	8.31e-02
2261	ok	0.24	3.76e-02	1.46e-02	5.7	5.7	2.5	2.5	-33.0	-2.8	-10.7	2.85e-02	1.11e-02	0.1
2298	ok	0.24	0.1	2.58e-02	5.7	5.7	2.5	2.5	-53.9	-0.7	0.2	-0.3	8.71e-03	3.87e-02
2313	ok	0.24	0.1	2.73e-02	5.7	5.7	2.5	2.5	-59.1	-0.9	7.4	-0.4	-7.38e-02	-2.14e-02
2342	ok	0.24	0.1	2.33e-02	5.7	5.7	2.5	2.5	-45.4	-4.3	14.4	-0.3	-7.78e-02	-3.40e-02
2371	ok	0.24	0.1	1.83e-02	5.7	5.7	2.5	2.5	-30.6	-3.7	15.3	-0.2	-5.81e-02	-2.83e-02
2400	ok	0.24	8.21e-02	1.44e-02	5.7	5.7	2.5	2.5	-27.3	-2.3	-15.1	1.3	0.3	0.3
2429	ok	0.24	6.34e-02	1.44e-02	5.7	5.7	2.5	2.5	-29.1	-1.7	-15.1	0.6	0.1	0.3
2469	ok	0.24	5.09e-02	1.40e-02	5.7	5.7	2.5	2.5	-26.8	-1.4	-11.7	-2.55e-04	-5.36e-03	0.3
2506	ok	0.24	0.1	2.46e-02	5.7	5.7	2.5	2.5	-49.9	0.2	-0.8	-4.47e-02	3.19e-03	2.51e-05
2521	ok	0.24	0.1	2.60e-02	5.7	5.7	2.5	2.5	-49.5	-1.1	5.8	-6.29e-02	-1.78e-02	-3.96e-02
2550	ok	0.24	0.2	2.26e-02	5.7	5.7	2.5	2.5	-36.6	-1.5	12.8	0.3	6.78e-02	-3.00e-02
2579	ok	0.24	0.1	1.76e-02	5.7	5.7	2.5	2.5	-28.1	-2.4	14.5	0.2	4.96e-02	-2.44e-02
2608	ok	0.24	8.19e-02	1.41e-02	5.7	5.7	2.5	2.5	-23.2	-2.5	-14.5	-1.3	-0.3	0.3
2637	ok	0.24	5.71e-02	1.34e-02	5.7	5.7	2.5	2.5	-22.9	-2.1	-14.2	-0.6	-0.1	0.3
2677	ok	0.24	5.33e-02	1.19e-02	5.7	5.7	2.5	2.5	-21.8	0.4	-10.0	-1.50e-02	4.11e-02	0.3
2714	ok	0.24	0.2	2.66e-02	5.7	5.7	2.5	2.5	-53.9	-0.3	-1.5	-6.32e-02	-5.28e-03	-5.52e-03
2740	ok	0.24	0.3	2.80e-02	5.7	5.7	2.5	2.5	-41.4	-4.0	-10.2	3.0	0.6	0.1
2797	ok	0.24	0.2	2.15e-02	5.7	5.7	2.5	2.5	-28.6	-3.4	-9.2	2.8	0.6	0.2
2854	ok	0.24	0.1	1.68e-02	5.7	5.7	2.5	2.5	-15.2	-3.5	-17.0	2.0	0.4	6.95e-02
2911	ok	0.24	8.27e-02	1.37e-02	5.7	5.7	2.5	2.5	-12.2	-3.2	-11.7	1.3	0.3	9.31e-02
2968	ok	0.24	6.38e-02	1.20e-02	5.7	5.7	2.5	2.5	-23.7	-3.7	-11.7	-0.6	-0.1	8.87e-02
3025	ok	0.24	4.75e-02	9.73e-03	5.7	5.7	2.5	2.5	-21.2	-2.4	-8.0	-3.96e-02	1.29e-02	0.1
3062	ok	0.24	0.1	2.31e-02	5.7	5.7	2.5	2.5	-54.8	-1.7	-1.3	1.59e-02	-0.5	-3.43e-04
3077	ok	0.24	0.1	2.46e-02	5.7	5.7	2.5	2.5	-42.9	-0.9	-11.0	2.9	0.5	0.2
3106	ok	0.24	0.2	1.81e-02	5.7	5.7	2.5	2.5	-29.1	-7.6	-18.0	2.7	0.6	0.3
3135	ok	0.24	0.1	1.19e-02	5.7	5.7	2.5	2.5	-14.6	-7.4	-14.9	2.0	0.5	0.2
3164	ok	0.24	9.30e-02	9.35e-03	5.7	5.7	2.5	2.5	-12.3	-3.5	-12.0	1.3	0.3	0.3
3193	ok	0.24	7.15e-02	9.37e-03	5.7	5.7	2.5	2.5	-16.6	-3.5	-11.3	0.6	0.1	0.3
3233	ok	0.24	4.73e-02	8.48e-03	5.7	5.7	2.5	2.5	-14.0	-0.8	-8.1	1.00e-03	3.84e-03	0.3
3270	ok	0.24	0.1	3.02e-02	5.7	5.7	2.5	2.5	-75.9	-1.1	-2.8	-2.3	2.80e-02	-0.1
3285	ok	0.24	0.1	3.15e-02	5.7	5.7	2.5	2.5	-74.5	-7.1	-17.3	-2.7	-0.5	0.2
3314	ok	0.24	0.2	1.74e-02	5.7	5.7	2.5	2.5	-24.5	-11.6	-19.0	-2.6	-0.6	0.3
3343	ok	0.24	0.1	1.11e-02	5.7	5.7	2.5	2.5	-6.2	-9.7	-13.7	-2.0	-0.5	0.3
3372	ok	0.24	9.34e-02	8.71e-03	5.7	5.7	2.5	2.5	-10.9	-3.3	-10.1	-4.67e-02	-4.55e-02	0.3
3401	ok	0.24	5.61e-02	7.99e-03	5.7	5.7	2.5	2.5	-11.9	0.5	-7.8	-0.6	-7.29e-02	0.2
3441	ok	0.24	4.78e-02	6.74e-03	5.7	5.7	2.5	2.5	-13.2	0.3	-7.7	7.65e-03	5.96e-02	0.3
3484	ok	0.24	0.2	3.99e-02	5.7	5.7	2.5	2.5	-100.2	-1.5	1.3	2.7	0.6	0.8
3510	ok	0.24	0.3	5.33e-02	5.7	5.7	2.5	2.5	-85.9	-0.4	-5.3	-2.7	-0.4	0.8
3567	ok	0.24	0.2	1.62e-02	5.7	5.7	2.5	2.5	-21.2	-14.2	-20.7	-2.7	-0.6	0.1
3624	ok	0.24	0.1	1.15e-02	5.7	5.7	2.5	2.5	-4.5	-9.9	-10.6	-2.0	-0.4	0.1
3681	ok	0.24	8.28e-02	8.68e-03	5.7	5.7	2.5	2.5	-3.8	3.0	7.2	1.0	0.2	0.1
3738	ok	0.24	4.71e-02	7.37e-03	5.7	5.7	2.5	2.5	-13.7	-1.5	-8.4	-0.6	-0.1	9.24e-02
3795	ok	0.24	3.96e-02	4.77e-03	5.7	5.7	2.5	2.5	-7.7	-5.31e-02	-2.2	-0.1	1.65e-02	9.70e-02
3862	ok	0.24	0.7	8.88e-02	5.7	5.7	2.5	2.5	-208.7	-5.1	-53.3	-0.6	-0.2	0.2
3877	ok	0.24	0.5	8.44e-02	5.7	5.7	2.5	2.5	-132.4	-27.4	-47.8	2.6	0.6	0.3
3906	ok	0.24	0.3	2.51e-02	5.7	5.7	2.5	2.5	60.4	-27.6	-41.1	-0.1	-5.44e-03	3.34e-02
3935	ok	0.24	0.2	7.81e-03	5.7	5.7	2.5	2.5	-6.4	-2.3	5.6	-1.3	-0.3	0.3
3964	ok	0.24	8.88e-02	5.11e-03	5.7	5.7	2.5	2.5	-6.1	-0.5	6.4	0.9	0.2	0.3
3993	ok	0.24	4.86e-02	3.56e-03	5.7	5.7	2.5	2.5	-3.0	-0.3	6.1	0.3	0.1	0.2
4033	ok	0.24	2.57e-02	3.25e-03	5.7	5.7	2.5	2.5	-6.8	0.2	-3.2	-0.2	-2.53e-03	0.2
4373	ok	0.36	1.0	0.4	16.7	17.3	8.4	8.3	-1134.3	-224.2	-362.4	-2.8	-0.3	-0.3
4388	ok	0.43	1.0	0.3	28.6	27.4	8.9	6.3	-631.4	-217.6	-485.1	-6.3	-1.0	-1.1
4417	ok	0.24	0.7	3.02e-02	5.7	5.7	2.5	2.5	-75.8	-29.4	2.7	1.1	0.2	7.17e-03

4446	ok	0.24	0.2	6.53e-03	5.7	5.7	2.5	2.5	12.3	12.6	9.3	-0.3	-5.58e-02	3.65e-02
4475	ok	0.24	0.1	5.13e-03	5.7	5.7	2.5	2.5	-8.2	2.1	2.1	-5.49e-02	-1.11e-02	3.66e-03
4504	ok	0.24	4.97e-02	3.64e-03	5.7	5.7	2.5	2.5	-4.0	2.2	-5.0	0.5	0.1	-7.21e-02
4544	ok	0.24	3.64e-02	2.63e-03	5.7	5.7	2.5	2.5	-0.5	0.2	-2.6	-0.4	-1.16e-02	-0.2
4602	ok	0.32	1.0	0.6	11.4	11.7	3.4	3.0	-1394.7	-424.9	-505.0	-2.8	0.3	0.1
4661	ok	0.41	1.0	0.2	23.9	22.9	5.2	4.1	-386.7	-116.6	-323.5	-6.1	-0.4	-0.6
4720	ok	0.24	0.7	2.94e-02	5.7	5.7	2.5	2.5	-73.8	-9.8	2.4	1.0	0.2	5.65e-02
4779	ok	0.24	0.2	4.17e-03	5.7	5.7	2.5	2.5	10.0	5.0	17.2	0.2	2.76e-02	3.69e-02
4838	ok	0.24	0.1	5.87e-03	5.7	5.7	2.5	2.5	-8.1	1.3	-1.0	-8.98e-02	-1.94e-02	-8.76e-03
4897	ok	0.24	4.95e-02	4.39e-03	5.7	5.7	2.5	2.5	-5.4	1.3	-6.0	0.5	0.3	9.58e-02
4956	ok	0.24	3.00e-02	1.71e-03	5.7	5.7	2.5	2.5	0.6	2.9	-2.7	-0.3	7.93e-02	-4.42e-03

Nodo	**x/d**	**V N/M**	**ver. rid**	**Af pr-**	**Af pr+**	**Af sec-**	**Af sec+**	**N z**	**N o**	**N zo**	**M z**	**M o**	**M zo**
								-1394.70	-424.95	-505.03	-6.31	-0.97	-1.10
	0.43	1.00	0.57	28.60	27.41	8.90	8.35	60.37	19.42	126.43	3.63	0.78	0.83

Nodo	**Stato**	**Max tau** daN/cm2	**Ver V pr**	**Ver V sec**	**Af V pr**	**Af V sec**	**V pr** kN/ m	**V sec** kN/ m
319	ok	2.25						
378	ok	2.21						
437	ok	1.41						
496	ok	0.93						
555	ok	0.65						
614	ok	0.43						
673	ok	0.81						
770	ok	3.10						
785	ok	1.67						
814	ok	1.42						
843	ok	1.09						
872	ok	0.69						
901	ok	0.53						
941	ok	0.82						
978	ok	3.09						
993	ok	1.63						
1022	ok	1.39						
1051	ok	1.08						
1080	ok	0.65						
1109	ok	0.41						
1149	ok	0.50						
1186	ok	1.06						
1212	ok	1.62						
1269	ok	1.38						
1326	ok	0.93						
1383	ok	0.65						
1440	ok	0.35						
1497	ok	0.48						
1534	ok	3.04						
1549	ok	1.58						
1578	ok	1.41						
1607	ok	1.07						
1636	ok	0.67						
1665	ok	0.40						
1705	ok	0.40						
1742	ok	3.04						
1757	ok	1.57						
1786	ok	1.40						
1815	ok	1.07						
1844	ok	0.66						
1873	ok	0.41						
1913	ok	0.44						
1950	ok	0.68						
1976	ok	1.61						
2033	ok	1.41						
2090	ok	0.93						
2147	ok	0.65						
2204	ok	0.35						
2261	ok	0.42						
2298	ok	3.10						
2313	ok	1.62						
2342	ok	1.43						
2371	ok	1.09						
2400	ok	0.68						
2429	ok	0.39						
2469	ok	0.39						
2506	ok	3.10						
2521	ok	1.60						
2550	ok	1.42						

2579	ok	1.09						
2608	ok	0.65						
2637	ok	0.41						
2677	ok	0.42						
2714	ok	0.65						
2740	ok	1.59						
2797	ok	1.39						
2854	ok	0.93						
2911	ok	0.67						
2968	ok	0.36						
3025	ok	0.40						
3062	ok	2.94						
3077	ok	1.56						
3106	ok	1.41						
3135	ok	1.09						
3164	ok	0.69						
3193	ok	0.39						
3233	ok	0.42						
3270	ok	2.94						
3285	ok	1.47						
3314	ok	1.40						
3343	ok	1.08						
3372	ok	0.66						
3401	ok	0.44						
3441	ok	0.41						
3484	ok	1.04						
3510	ok	2.88						
3567	ok	1.94						
3624	ok	1.43						
3681	ok	0.90						
3738	ok	0.39						
3795	ok	0.46						
3862	ok Av	9.12	0.42	7.04e-03	10.4	0.2	100.3	1.7
3877	ok	2.90						
3906	ok	2.00						
3935	ok	1.98						
3964	ok	0.91						
3993	ok	0.34						
4033	ok	0.46						
4373	ok Av	14.73	0.66	0.10	16.5	2.6	159.6	25.2
4388	ok Av	18.94	0.85	0.11	21.4	2.6	206.1	25.4
4417	ok	4.66						
4446	ok	1.95						
4475	ok	0.77						
4504	ok	0.44						
4544	ok	0.74						
4602	ok Av	14.66	0.65	0.11	16.4	2.7	158.7	25.8
4661	ok Av	19.00	0.86	0.09	21.5	2.2	207.2	21.2
4720	ok	4.87						
4779	ok	1.46						
4838	ok	0.72						
4897	ok	0.34						
4956	ok	0.76						
Nodo		**Max tau**	**Ver V pr**	**Ver V sec**	**Af V pr**	**Af V sec**	**V pr**	**V sec**
		19.00	0.86	0.11	21.47	2.67	207.22	25.77

Macro Setto	Spessore	Id Materiale	Id Criterio	Progettazione
	cm			
5	15.00	1	1	Singolo elemento NON DISSIPATIVO

Nodo	Stato	x/d	V N/M	ver. rid	Af pr-	Af pr+	Af sec-	Af sec+	N z	N o	N zo	M z	M o	M zo
									kN/ m	kN/ m	kN/ m	kN	kN	kN
331	ok	0.24	0.6	0.3	5.7	5.7	2.5	2.5	-626.2	-109.3	121.7	0.4	1.03e-02	-1.25e-02
390	ok	0.24	0.6	0.2	5.7	5.7	2.5	2.5	-414.8	-81.8	126.3	0.4	2.55e-03	-1.25e-02
449	ok	0.24	0.4	4.75e-02	5.7	5.7	2.5	2.5	-88.2	-23.3	2.1	-3.5	-0.8	5.85e-02
508	ok	0.24	0.2	3.32e-02	5.7	5.7	2.5	2.5	-74.3	-20.0	-22.7	-2.6	-0.6	5.42e-02
567	ok	0.24	0.2	2.41e-02	5.7	5.7	2.5	2.5	-56.9	-10.9	11.6	-1.7	-0.3	6.41e-02
626	ok	0.24	0.1	2.36e-02	5.7	5.7	2.5	2.5	-33.7	-5.4	3.5	-0.8	-0.2	7.44e-02
685	ok	0.24	5.21e-02	3.12e-02	5.7	5.7	2.5	2.5	-54.3	-15.4	-21.1	-8.73e-02	9.03e-03	3.44e-02
771	ok	0.25	1.0	0.2	6.0	5.9	2.9	2.8	-428.4	1.5	69.3	0.5	3.04e-02	8.56e-03
791	ok	0.24	0.7	0.2	5.7	5.7	2.5	2.5	-366.6	-63.8	82.6	0.5	8.06e-02	1.78e-02
820	ok	0.24	0.4	4.68e-02	5.7	5.7	2.5	2.5	-87.9	11.7	-4.4	-3.4	-0.7	-0.2

849	ok	0.24	0.2	3.03e-02	5.7	5.7	2.5	2.5	-69.7	19.4	-9.9	-2.6	-0.6	-0.2
878	ok	0.24	0.1	2.31e-02	5.7	5.7	2.5	2.5	-57.9	-8.5	-1.1	-1.7	-0.3	-0.2
907	ok	0.24	4.66e-02	2.14e-02	5.7	5.7	2.5	2.5	-41.6	-6.8	4.1	-0.8	-0.2	-0.2
953	ok	0.24	5.55e-02	2.55e-02	5.7	5.7	2.5	2.5	-52.7	-13.2	-12.9	-1.37e-02	0.1	-0.2
979	ok	0.24	0.2	8.69e-02	5.7	5.7	2.5	2.5	-217.3	-5.3	-13.4	7.78e-02	6.55e-02	-6.83e-03
999	ok	0.24	0.3	0.1	5.7	5.7	2.5	2.5	-236.8	-30.5	54.0	8.81e-02	2.19e-02	4.64e-02
1028	ok	0.24	0.2	4.21e-02	5.7	5.7	2.5	2.5	-77.4	-40.3	40.1	-0.3	-6.40e-02	3.60e-02
1057	ok	0.24	0.2	3.12e-02	5.7	5.7	2.5	2.5	-50.4	7.5	-10.8	1.9	0.4	-0.3
1086	ok	0.24	0.1	2.29e-02	5.7	5.7	2.5	2.5	-52.4	-4.0	-8.0	1.2	0.3	-0.3
1115	ok	0.24	6.22e-02	2.19e-02	5.7	5.7	2.5	2.5	-46.8	-1.0	-10.5	0.6	0.1	-0.3
1161	ok	0.24	6.14e-02	1.99e-02	5.7	5.7	2.5	2.5	-49.4	-1.8	-4.7	3.54e-02	7.13e-03	-0.3
1187	ok	0.24	0.2	6.31e-02	5.7	5.7	2.5	2.5	-158.4	-4.2	3.7	-0.3	-4.97e-02	0.1
1224	ok	0.24	0.3	6.39e-02	5.7	5.7	2.5	2.5	-154.7	-23.0	27.0	-0.3	-5.87e-02	1.91e-02
1281	ok	0.24	0.2	3.81e-02	5.7	5.7	2.5	2.5	-76.3	-21.1	36.0	-0.2	-4.75e-02	1.42e-02
1338	ok	0.24	0.1	2.75e-02	5.7	5.7	2.5	2.5	-57.2	-0.8	-11.1	1.9	0.4	-8.83e-02
1395	ok	0.24	6.41e-02	2.28e-02	5.7	5.7	2.5	2.5	-55.4	-3.8	-8.3	1.3	0.3	-0.1
1452	ok	0.24	4.98e-02	2.15e-02	5.7	5.7	2.5	2.5	-48.7	-1.2	-7.2	0.6	0.1	-9.73e-02
1509	ok	0.24	2.70e-02	1.94e-02	5.7	5.7	2.5	2.5	-46.2	-3.7	-8.3	-0.1	-2.14e-02	2.06e-02
1535	ok	0.24	0.1	4.09e-02	5.7	5.7	2.5	2.5	-102.6	-1.4	-1.9	0.3	-8.66e-03	-2.96e-02
1555	ok	0.24	0.2	4.51e-02	5.7	5.7	2.5	2.5	-110.9	-5.7	15.6	0.3	6.29e-02	2.40e-02
1584	ok	0.24	0.1	3.15e-02	5.7	5.7	2.5	2.5	-68.9	-14.3	24.5	0.3	6.93e-02	3.53e-02
1613	ok	0.24	0.1	2.22e-02	5.7	5.7	2.5	2.5	-38.0	2.5	-14.4	-1.9	-0.4	-0.2
1642	ok	0.24	6.90e-02	1.96e-02	5.7	5.7	2.5	2.5	-43.9	-1.4	-11.1	-1.2	-0.3	-0.3
1671	ok	0.24	4.41e-02	1.83e-02	5.7	5.7	2.5	2.5	-41.6	4.26e-02	-12.5	-0.6	-0.1	-0.2
1717	ok	0.24	2.55e-02	1.82e-02	5.7	5.7	2.5	2.5	-40.9	2.38e-02	-10.6	-1.47e-03	4.46e-03	-0.3
1743	ok	0.24	0.1	3.55e-02	5.7	5.7	2.5	2.5	-89.2	-1.4	0.4	2.26e-02	6.89e-02	3.82e-03
1763	ok	0.24	0.1	3.66e-02	5.7	5.7	2.5	2.5	-77.1	-0.8	9.2	-0.4	-6.26e-02	2.33e-02
1792	ok	0.24	0.1	2.89e-02	5.7	5.7	2.5	2.5	-59.4	-9.2	19.2	-0.3	-6.86e-02	3.42e-02
1821	ok	0.24	0.1	2.25e-02	5.7	5.7	2.5	2.5	-36.1	-7.5	19.9	-0.2	-4.96e-02	2.84e-02
1850	ok	0.24	7.91e-02	1.86e-02	5.7	5.7	2.5	2.5	-35.5	-0.9	-14.7	1.2	0.3	-0.2
1879	ok	0.24	5.79e-02	1.77e-02	5.7	5.7	2.5	2.5	-35.6	0.1	-15.4	0.6	0.1	-0.2
1925	ok	0.24	3.31e-02	1.65e-02	5.7	5.7	2.5	2.5	-36.4	0.6	-9.8	2.19e-02	-3.78e-02	-0.2
1951	ok	0.24	0.2	3.35e-02	5.7	5.7	2.5	2.5	-80.2	-1.2	-0.5	-0.3	-5.97e-02	0.1
1988	ok	0.24	0.2	3.39e-02	5.7	5.7	2.5	2.5	-80.2	-0.8	0.7	-0.3	-7.04e-02	0.1
2045	ok	0.24	0.1	2.68e-02	5.7	5.7	2.5	2.5	-46.2	-6.5	13.8	0.3	5.88e-02	1.34e-02
2102	ok	0.24	9.56e-02	2.25e-02	5.7	5.7	2.5	2.5	-36.9	-5.8	21.5	-0.2	-3.51e-02	5.90e-03
2159	ok	0.24	7.63e-02	1.87e-02	5.7	5.7	2.5	2.5	-26.4	-1.3	-17.4	-1.3	-0.3	-9.16e-02
2216	ok	0.24	5.70e-02	1.66e-02	5.7	5.7	2.5	2.5	-28.0	-1.6	-15.3	-0.6	-0.1	-8.74e-02
2273	ok	0.24	3.77e-02	1.47e-02	5.7	5.7	2.5	2.5	-33.3	-2.8	-10.9	-4.15e-02	-1.47e-02	-9.92e-02
2299	ok	0.24	0.1	2.62e-02	5.7	5.7	2.5	2.5	-55.0	-0.8	0.3	0.3	-8.64e-03	-3.25e-02
2319	ok	0.24	0.1	2.77e-02	5.7	5.7	2.5	2.5	-60.2	-0.9	7.6	0.4	6.40e-02	2.06e-02
2348	ok	0.24	0.1	2.37e-02	5.7	5.7	2.5	2.5	-46.2	-4.3	14.6	0.3	7.43e-02	3.32e-02
2377	ok	0.24	0.1	1.86e-02	5.7	5.7	2.5	2.5	-31.1	-3.7	15.5	0.2	5.54e-02	2.80e-02
2406	ok	0.24	8.19e-02	1.46e-02	5.7	5.7	2.5	2.5	-27.5	-2.3	-15.3	-1.2	-0.3	-0.3
2435	ok	0.24	6.47e-02	1.46e-02	5.7	5.7	2.5	2.5	-29.3	-1.7	-15.3	-0.6	-0.1	-0.2
2481	ok	0.24	5.16e-02	1.42e-02	5.7	5.7	2.5	2.5	-27.1	-1.5	-12.0	-3.79e-03	-1.69e-03	-0.3
2507	ok	0.24	0.1	2.49e-02	5.7	5.7	2.5	2.5	-50.4	0.2	-0.8	3.12e-02	-1.60e-03	2.87e-05
2527	ok	0.24	0.1	2.62e-02	5.7	5.7	2.5	2.5	-50.4	-1.1	5.9	5.17e-02	1.46e-02	4.06e-02
2556	ok	0.24	0.2	2.30e-02	5.7	5.7	2.5	2.5	-37.3	-1.4	13.0	-0.3	-6.38e-02	3.20e-02
2585	ok	0.24	0.1	1.79e-02	5.7	5.7	2.5	2.5	-28.5	-2.4	14.6	-0.2	-4.57e-02	2.89e-02
2614	ok	0.24	8.12e-02	1.43e-02	5.7	5.7	2.5	2.5	-23.3	-2.5	-14.8	1.2	0.3	-0.3
2643	ok	0.24	5.82e-02	1.36e-02	5.7	5.7	2.5	2.5	-23.3	-2.1	-14.4	0.6	0.1	-0.2
2689	ok	0.24	5.38e-02	1.21e-02	5.7	5.7	2.5	2.5	-22.0	0.5	-10.3	1.14e-02	-4.80e-02	-0.2
2715	ok	0.24	0.2	2.69e-02	5.7	5.7	2.5	2.5	-54.5	-0.3	-1.5	2.95e-02	2.82e-03	2.72e-03
2752	ok	0.24	0.2	2.82e-02	5.7	5.7	2.5	2.5	-41.8	-4.0	-10.4	-2.9	-0.6	-0.1
2809	ok	0.24	0.1	2.19e-02	5.7	5.7	2.5	2.5	-29.1	-3.4	-9.3	-2.6	-0.5	-0.2
2866	ok	0.24	0.1	1.72e-02	5.7	5.7	2.5	2.5	-15.4	-3.3	-17.3	-2.0	-0.4	-6.74e-02
2923	ok	0.24	8.45e-02	1.39e-02	5.7	5.7	2.5	2.5	-12.6	-3.1	-12.0	-1.3	-0.3	-9.39e-02
2980	ok	0.24	6.70e-02	1.22e-02	5.7	5.7	2.5	2.5	-24.1	-3.7	-11.9	0.6	0.1	-9.18e-02
3037	ok	0.24	4.90e-02	9.88e-03	5.7	5.7	2.5	2.5	-21.4	-2.4	-8.3	5.43e-02	-1.88e-02	-0.1
3063	ok	0.24	0.1	2.34e-02	5.7	5.7	2.5	2.5	-55.3	-1.7	-1.4	5.15e-03	0.5	-1.18e-03
3083	ok	0.24	0.1	2.49e-02	5.7	5.7	2.5	2.5	-43.2	-0.8	-11.2	-2.8	-0.5	-0.2
3112	ok	0.24	0.2	1.83e-02	5.7	5.7	2.5	2.5	-29.6	-7.6	-18.1	-2.6	-0.6	-0.3
3141	ok	0.24	0.1	1.20e-02	5.7	5.7	2.5	2.5	-14.9	-7.4	-15.1	-1.9	-0.4	-0.2
3170	ok	0.24	9.34e-02	9.60e-03	5.7	5.7	2.5	2.5	-12.6	-3.5	-12.1	-1.2	-0.2	-0.3
3199	ok	0.24	7.31e-02	9.42e-03	5.7	5.7	2.5	2.5	-16.6	-3.4	-11.3	-0.5	-0.1	-0.3
3245	ok	0.24	4.93e-02	8.57e-03	5.7	5.7	2.5	2.5	-14.1	-0.8	-8.3	-3.43e-03	-9.00e-03	-0.3
3271	ok	0.24	0.1	3.05e-02	5.7	5.7	2.5	2.5	-76.5	-1.1	-2.9	2.2	-2.77e-02	0.1
3291	ok	0.24	0.1	3.17e-02	5.7	5.7	2.5	2.5	-75.1	-7.1	-17.4	2.6	0.4	-0.2
3320	ok	0.24	0.2	1.75e-02	5.7	5.7	2.5	2.5	-25.0	-11.7	-19.1	2.6	0.6	-0.3
3349	ok	0.24	0.1	1.13e-02	5.7	5.7	2.5	2.5	-6.6	-9.7	-13.9	1.9	0.4	-0.2
3378	ok	0.24	9.41e-02	8.92e-03	5.7	5.7	2.5	2.5	-13.5	-1.5	8.8	1.3	0.3	-0.3
3407	ok	0.24	5.65e-02	8.07e-03	5.7	5.7	2.5	2.5	-6.9	0.8	9.4	0.6	0.2	-0.3
3453	ok	0.24	4.96e-02	6.83e-03	5.7	5.7	2.5	2.5	-13.3	0.3	-7.8	-8.27e-03	-6.14e-02	-0.3
3485	ok	0.24	0.2	4.02e-02	5.7	5.7	2.5	2.5	-100.9	-1.5	1.3	-2.6	-0.6	-0.7
3522	ok	0.24	0.3	5.34e-02	5.7	5.7	2.5	2.5	-110.2	-5.3	8.1	-2.6	-0.6	-0.8
3579	ok	0.24	0.2	1.62e-02	5.7	5.7	2.5	2.5	-21.7	-14.3	-20.8	2.6	0.5	-0.1
3636	ok	0.24	0.1	1.16e-02	5.7	5.7	2.5	2.5	-20.0	-1.5	8.2	2.0	0.4	-9.65e-02
3693	ok	0.24	8.24e-02	8.87e-03	5.7	5.7	2.5	2.5	-13.1	1.4	13.7	1.3	0.3	-0.1

3750	ok	0.24	4.85e-02	7.53e-03	5.7	5.7	2.5	2.5	-7.8	-5.97e-02	11.5	0.6	0.1	-8.96e-02
3807	ok	0.24	4.09e-02	4.86e-03	5.7	5.7	2.5	2.5	-7.7	-0.1	-2.3	0.1	-2.01e-02	-9.19e-02
3863	ok	0.24	0.7	8.90e-02	5.7	5.7	2.5	2.5	-209.3	-5.4	-53.4	4.4	1.4	-1.1
3883	ok	0.24	0.5	8.46e-02	5.7	5.7	2.5	2.5	-177.5	39.8	-20.1	2.2	0.9	-1.0
3912	ok	0.24	0.3	2.52e-02	5.7	5.7	2.5	2.5	16.0	-19.7	-36.7	-2.2	-0.5	-0.3
3941	ok	0.24	0.2	7.91e-03	5.7	5.7	2.5	2.5	-6.6	-2.4	5.9	1.4	0.4	-0.3
3970	ok	0.24	8.91e-02	5.26e-03	5.7	5.7	2.5	2.5	-6.2	-0.6	6.6	-0.9	-0.3	-0.3
3999	ok	0.24	4.86e-02	3.69e-03	5.7	5.7	2.5	2.5	-3.1	-0.3	6.4	-0.3	-0.1	-0.2
4045	ok	0.24	2.60e-02	3.25e-03	5.7	5.7	2.5	2.5	-6.8	0.2	-3.3	0.2	-3.31e-03	-0.2
4374	ok	0.36	1.0	0.4	17.0	16.8	8.9	8.6	-1135.8	-224.5	-362.8	2.4	0.2	0.2
4394	ok	0.43	1.0	0.3	27.2	28.4	6.7	5.8	-627.6	-218.2	-485.8	5.3	0.8	0.9
4423	ok	0.24	0.7	3.04e-02	5.7	5.7	2.5	2.5	-76.1	-29.5	2.9	-1.0	-0.2	-1.13e-03
4452	ok	0.24	0.2	6.56e-03	5.7	5.7	2.5	2.5	12.1	12.4	9.4	0.2	4.45e-02	-3.10e-02
4481	ok	0.24	0.1	5.29e-03	5.7	5.7	2.5	2.5	-6.3	0.2	6.1	0.5	2.01e-02	-0.2
4510	ok	0.24	4.95e-02	3.77e-03	5.7	5.7	2.5	2.5	-4.2	2.2	-5.1	-0.5	-0.1	7.51e-02
4556	ok	0.24	3.63e-02	2.76e-03	5.7	5.7	2.5	2.5	-0.4	0.2	-2.7	0.4	1.08e-02	0.2
4614	ok	0.32	1.0	0.6	11.6	11.4	3.6	3.7	-1396.8	-425.8	-506.0	2.3	-0.3	-0.1
4673	ok	0.40	1.0	0.2	22.8	23.7	5.0	3.7	-382.2	-117.0	-323.6	5.2	0.4	0.5
4732	ok	0.24	0.7	2.95e-02	5.7	5.7	2.5	2.5	-74.1	-9.8	2.6	-0.9	-0.2	-5.37e-02
4791	ok	0.24	0.2	4.29e-03	5.7	5.7	2.5	2.5	9.9	4.9	17.4	-0.2	-2.66e-02	-3.26e-02
4850	ok	0.24	0.1	6.05e-03	5.7	5.7	2.5	2.5	-7.6	1.8	7.7	6.14e-02	1.49e-02	5.79e-03
4909	ok	0.24	4.91e-02	4.54e-03	5.7	5.7	2.5	2.5	-5.6	1.2	-6.0	-0.5	-0.3	-0.1
4968	ok	0.24	2.96e-02	1.87e-03	5.7	5.7	2.5	2.5	0.6	2.9	-2.8	0.4	-8.10e-02	3.77e-03

Nodo	**x/d**	**V N/M**	**ver. rid**	**Af pr-**	**Af pr+**	**Af sec-**	**Af sec+**	**N z**	**N o**	**N zo**	**M z**	**M o**	**M zo**
								-1396.82	-425.80	-506.04	-3.49	-0.75	-1.14
	0.43	1.00	0.57	27.19	28.36	8.85	8.59	15.99	39.78	126.30	5.29	1.39	0.91

Nodo	**Stato**	**Max tau**	**Ver V pr**	**Ver V sec**	**Af V pr**	**Af V sec**	**V pr**	**V sec**
		daN/cm2					kN/ m	kN/ m
331	ok	2.24						
390	ok	2.19						
449	ok	1.40						
508	ok	0.92						
567	ok	0.64						
626	ok	0.43						
685	ok	0.83						
771	ok	3.08						
791	ok	1.65						
820	ok	1.41						
849	ok	1.09						
878	ok	0.68						
907	ok	0.52						
953	ok	0.82						
979	ok	3.07						
999	ok	1.61						
1028	ok	1.38						
1057	ok	1.08						
1086	ok	0.65						
1115	ok	0.40						
1161	ok	0.49						
1187	ok	1.04						
1224	ok	1.60						
1281	ok	1.36						
1338	ok	0.91						
1395	ok	0.64						
1452	ok	0.35						
1509	ok	0.49						
1535	ok	3.01						
1555	ok	1.56						
1584	ok	1.39						
1613	ok	1.06						
1642	ok	0.67						
1671	ok	0.40						
1717	ok	0.40						
1743	ok	3.01						
1763	ok	1.55						
1792	ok	1.38						
1821	ok	1.06						
1850	ok	0.65						
1879	ok	0.41						
1925	ok	0.44						
1951	ok	0.66						
1988	ok	1.59						
2045	ok	1.39						
2102	ok	0.92						
2159	ok	0.64						

2216	ok	0.35						
2273	ok	0.44						
2299	ok	3.08						
2319	ok	1.61						
2348	ok	1.42						
2377	ok	1.07						
2406	ok	0.67						
2435	ok	0.39						
2481	ok	0.39						
2507	ok	3.08						
2527	ok	1.59						
2556	ok	1.41						
2585	ok	1.08						
2614	ok	0.64						
2643	ok	0.41						
2689	ok	0.43						
2715	ok	0.64						
2752	ok	1.57						
2809	ok	1.38						
2866	ok	0.91						
2923	ok	0.66						
2980	ok	0.36						
3037	ok	0.43						
3063	ok	2.91						
3083	ok	1.54						
3112	ok	1.40						
3141	ok	1.08						
3170	ok	0.68						
3199	ok	0.39						
3245	ok	0.43						
3271	ok	2.91						
3291	ok	1.45						
3320	ok	1.39						
3349	ok	1.07						
3378	ok	0.65						
3407	ok	0.44						
3453	ok	0.41						
3485	ok	1.03						
3522	ok	2.87						
3579	ok	1.93						
3636	ok	1.43						
3693	ok	0.89						
3750	ok	0.39						
3807	ok	0.47						
3863	ok Av	9.12	0.42	6.85e-03	10.4	0.2	100.3	1.7
3883	ok	2.89						
3912	ok	1.99						
3941	ok	1.97						
3970	ok	0.90						
3999	ok	0.33						
4045	ok	0.47						
4374	ok Av	14.68	0.66	0.10	16.5	2.6	159.5	25.2
4394	ok Av	18.85	0.85	0.10	21.3	2.6	205.8	25.3
4423	ok	4.64						
4452	ok	1.95						
4481	ok	0.77						
4510	ok	0.44						
4556	ok	0.75						
4614	ok Av	14.63	0.66	0.11	16.4	2.6	158.9	25.4
4673	ok Av	18.87	0.86	0.09	21.3	2.1	206.5	20.8
4732	ok	4.84						
4791	ok	1.46						
4850	ok	0.71						
4909	ok	0.34						
4968	ok	0.78						
Nodo		**Max tau**	**Ver V pr**	**Ver V sec**	**Af V pr**	**Af V sec**	**V pr**	**V sec**
		18.87	0.86	0.11	21.32	2.62	206.52	25.40

Macro Setto	Spessore	Id Materiale	Id Criterio	Progettazione
	cm			
6	15.00	1	1	Singolo elemento NON DISSIPATIVO

Nodo	Stato	x/d	V N/M	ver. rid	Af pr-	Af pr+	Af sec-	Af sec+	N z	N o	N zo	M z	M o	M zo
									kN/ m	kN/ m	kN/ m	kN	kN	kN
343	ok	0.24	0.7	0.3	5.7	5.7	2.5	2.5	-639.6	-112.9	125.8	0.1	9.85e-03	-9.07e-03
402	ok	0.24	0.6	0.2	5.7	5.7	2.5	2.5	-425.6	-84.2	130.1	0.1	-1.31e-02	-5.88e-03
461	ok	0.24	0.4	4.98e-02	5.7	5.7	2.5	2.5	-92.8	-24.8	1.5	-3.5	-0.7	5.45e-02
520	ok	0.24	0.2	3.47e-02	5.7	5.7	2.5	2.5	-78.2	-21.1	-22.9	-2.6	-0.6	5.32e-02
579	ok	0.24	0.2	2.49e-02	5.7	5.7	2.5	2.5	-59.0	-11.0	9.4	-1.7	-0.4	6.36e-02
638	ok	0.24	0.1	2.34e-02	5.7	5.7	2.5	2.5	-44.6	-9.7	-9.1	-0.9	-0.2	6.73e-02
697	ok	0.24	5.34e-02	3.10e-02	5.7	5.7	2.5	2.5	-55.8	-15.3	-22.4	-0.1	4.12e-02	4.06e-02
772	ok	0.25	1.0	0.2	6.1	5.7	3.0	2.5	-448.7	-0.3	75.5	0.3	2.80e-02	5.29e-03
797	ok	0.24	0.7	0.2	5.7	5.7	2.5	2.5	-379.2	-67.5	86.2	0.3	7.37e-02	7.55e-03
826	ok	0.24	0.4	4.89e-02	5.7	5.7	2.5	2.5	-91.7	13.2	-5.1	-3.3	-0.7	-0.2
855	ok	0.24	0.2	3.17e-02	5.7	5.7	2.5	2.5	-72.9	20.6	-10.2	-2.5	-0.5	-0.2
884	ok	0.24	9.76e-02	2.40e-02	5.7	5.7	2.5	2.5	-60.0	-8.6	-3.2	-1.6	-0.3	-0.2
913	ok	0.24	5.19e-02	2.13e-02	5.7	5.7	2.5	2.5	-42.7	-5.0	1.9	-0.8	-0.2	-0.2
965	ok	0.24	6.39e-02	2.55e-02	5.7	5.7	2.5	2.5	-54.4	-13.9	-14.3	3.43e-02	0.1	-0.2
980	ok	0.24	0.2	8.97e-02	5.7	5.7	2.5	2.5	-224.5	-6.1	-13.5	0.1	5.78e-02	-4.76e-03
1005	ok	0.24	0.4	0.1	5.7	5.7	2.5	2.5	-244.4	-32.2	57.0	0.1	2.57e-02	2.96e-02
1034	ok	0.24	0.3	4.35e-02	5.7	5.7	2.5	2.5	-79.0	-41.7	42.1	-0.2	-4.95e-02	2.12e-02
1063	ok	0.24	0.2	3.25e-02	5.7	5.7	2.5	2.5	-52.5	8.3	-11.4	1.8	0.3	-0.3
1092	ok	0.24	0.1	2.38e-02	5.7	5.7	2.5	2.5	-54.4	-3.8	-7.7	1.2	0.2	-0.3
1121	ok	0.24	5.82e-02	2.19e-02	5.7	5.7	2.5	2.5	-48.3	-0.8	-10.2	0.5	0.1	-0.3
1173	ok	0.24	5.60e-02	2.11e-02	5.7	5.7	2.5	2.5	-50.0	0.4	-6.6	7.23e-03	-6.98e-03	-0.3
1188	ok	0.24	0.3	6.46e-02	5.7	5.7	2.5	2.5	-162.1	-4.5	4.9	-0.1	-3.89e-02	0.1
1236	ok	0.24	0.3	6.57e-02	5.7	5.7	2.5	2.5	-158.4	-23.7	29.1	-5.84e-02	-2.44e-02	9.30e-03
1293	ok	0.24	0.2	3.93e-02	5.7	5.7	2.5	2.5	-77.6	-21.7	38.1	-3.46e-02	-8.28e-03	9.99e-03
1350	ok	0.24	0.1	2.85e-02	5.7	5.7	2.5	2.5	-59.2	-0.4	-11.8	1.9	0.4	-8.76e-02
1407	ok	0.24	6.77e-02	2.36e-02	5.7	5.7	2.5	2.5	-57.3	-3.6	-8.1	1.3	0.3	-0.1
1464	ok	0.24	4.68e-02	2.15e-02	5.7	5.7	2.5	2.5	-42.2	-3.2	-14.1	-0.6	-0.1	-8.73e-02
1521	ok	0.24	3.00e-02	1.98e-02	5.7	5.7	2.5	2.5	-48.0	-1.4	-9.0	-0.1	-1.14e-02	-9.42e-02
1536	ok	0.24	0.1	4.17e-02	5.7	5.7	2.5	2.5	-104.7	-1.5	-1.7	0.1	-5.21e-03	-3.46e-02
1561	ok	0.24	0.2	4.60e-02	5.7	5.7	2.5	2.5	-112.8	-6.1	16.6	0.3	6.05e-02	1.08e-02
1590	ok	0.24	0.1	3.23e-02	5.7	5.7	2.5	2.5	-69.9	-14.7	25.9	0.2	5.19e-02	2.04e-02
1619	ok	0.24	0.1	2.20e-02	5.7	5.7	2.5	2.5	-39.1	2.9	-15.1	-1.8	-0.3	-0.2
1648	ok	0.24	6.78e-02	2.03e-02	5.7	5.7	2.5	2.5	-45.4	-1.2	-11.5	-1.2	-0.2	-0.3
1677	ok	0.24	4.52e-02	1.89e-02	5.7	5.7	2.5	2.5	-42.9	0.3	-12.9	-0.5	-0.1	-0.2
1729	ok	0.24	2.64e-02	1.87e-02	5.7	5.7	2.5	2.5	-41.9	-1.99e-02	-10.9	-6.93e-03	1.29e-02	-0.3
1744	ok	0.24	0.1	3.60e-02	5.7	5.7	2.5	2.5	-90.3	-1.5	0.5	7.72e-02	5.97e-02	2.80e-03
1769	ok	0.24	0.1	3.71e-02	5.7	5.7	2.5	2.5	-91.7	-4.9	11.4	0.1	2.03e-02	2.83e-02
1798	ok	0.24	0.1	2.95e-02	5.7	5.7	2.5	2.5	-65.9	-10.6	21.9	8.43e-02	1.01e-02	1.66e-02
1827	ok	0.24	0.1	2.23e-02	5.7	5.7	2.5	2.5	-36.9	-11.7	18.8	-0.2	-2.80e-02	1.49e-02
1856	ok	0.24	8.05e-02	1.92e-02	5.7	5.7	2.5	2.5	-36.6	-0.7	-15.2	1.2	0.3	-0.2
1885	ok	0.24	5.88e-02	1.83e-02	5.7	5.7	2.5	2.5	-36.7	0.3	-15.9	0.5	0.1	-0.2
1937	ok	0.24	3.22e-02	1.70e-02	5.7	5.7	2.5	2.5	-40.3	0.3	-9.5	2.21e-03	-3.23e-02	-0.3
1952	ok	0.24	0.2	3.26e-02	5.7	5.7	2.5	2.5	-80.4	-1.3	-0.4	-0.2	-4.87e-02	0.1
2000	ok	0.24	0.2	3.32e-02	5.7	5.7	2.5	2.5	-78.3	-8.9	5.0	-9.29e-02	-2.96e-02	5.02e-03
2057	ok	0.24	0.1	2.65e-02	5.7	5.7	2.5	2.5	-59.2	-9.1	17.7	-7.41e-02	-1.55e-02	9.81e-03
2114	ok	0.24	9.55e-02	2.23e-02	5.7	5.7	2.5	2.5	-37.5	-5.9	22.6	-2.50e-02	-3.77e-03	5.33e-03
2171	ok	0.24	7.08e-02	1.87e-02	5.7	5.7	2.5	2.5	-38.5	-3.4	-16.3	1.3	0.3	-8.52e-02
2228	ok	0.24	5.25e-02	1.71e-02	5.7	5.7	2.5	2.5	-38.2	-2.9	-13.2	0.6	0.1	-7.92e-02
2285	ok	0.24	4.06e-02	1.52e-02	5.7	5.7	2.5	2.5	-36.4	-3.6	-7.3	0.1	3.03e-03	-9.03e-02
2300	ok	0.24	0.1	2.56e-02	5.7	5.7	2.5	2.5	-52.0	0.5	0.9	4.27e-02	0.5	-2.62e-02
2325	ok	0.24	0.1	2.71e-02	5.7	5.7	2.5	2.5	-49.2	1.8	1.1	3.05e-02	0.5	2.67e-02
2354	ok	0.24	0.1	2.32e-02	5.7	5.7	2.5	2.5	-46.4	-4.5	15.1	0.2	5.40e-02	1.97e-02
2383	ok	0.24	9.76e-02	1.83e-02	5.7	5.7	2.5	2.5	-31.4	-3.8	16.0	0.2	4.05e-02	1.51e-02
2412	ok	0.24	7.77e-02	1.47e-02	5.7	5.7	2.5	2.5	-28.3	-2.4	-15.7	-1.2	-0.2	-0.2
2441	ok	0.24	5.93e-02	1.50e-02	5.7	5.7	2.5	2.5	-30.3	-1.9	-15.7	-0.5	-0.1	-0.2
2493	ok	0.24	4.93e-02	1.46e-02	5.7	5.7	2.5	2.5	-32.2	-2.2	-11.9	1.95e-02	1.45e-02	-0.2
2508	ok	0.24	0.1	2.44e-02	5.7	5.7	2.5	2.5	-50.2	-0.6	7.12e-02	-2.77e-02	-0.5	-2.51e-02
2533	ok	0.24	0.1	2.58e-02	5.7	5.7	2.5	2.5	-52.3	-1.6	0.7	-1.61e-02	-0.5	2.70e-02
2562	ok	0.24	0.1	2.26e-02	5.7	5.7	2.5	2.5	-37.5	-1.5	13.4	-0.2	-4.59e-02	1.59e-02
2591	ok	0.24	0.1	1.77e-02	5.7	5.7	2.5	2.5	-28.8	-2.9	15.1	-0.2	-2.78e-02	1.41e-02
2620	ok	0.24	7.65e-02	1.43e-02	5.7	5.7	2.5	2.5	-24.1	-2.7	-15.2	1.2	0.2	-0.2
2649	ok	0.24	5.75e-02	1.40e-02	5.7	5.7	2.5	2.5	-23.9	-2.4	-14.8	0.5	0.1	-0.2
2701	ok	0.24	5.05e-02	1.25e-02	5.7	5.7	2.5	2.5	-23.1	0.2	-10.6	-1.50e-02	-5.21e-02	-0.2
2716	ok	0.24	0.2	2.63e-02	5.7	5.7	2.5	2.5	-53.4	-0.3	-1.5	0.1	1.11e-02	1.16e-02
2764	ok	0.24	0.2	2.79e-02	5.7	5.7	2.5	2.5	-43.0	-4.1	-10.8	-2.9	-0.6	-0.1
2821	ok	0.24	0.1	2.15e-02	5.7	5.7	2.5	2.5	-29.7	-3.5	-9.9	-2.7	-0.5	-0.2
2878	ok	0.24	0.1	1.70e-02	5.7	5.7	2.5	2.5	-15.6	-3.7	-18.1	-2.0	-0.4	-6.37e-02
2935	ok	0.24	8.15e-02	1.39e-02	5.7	5.7	2.5	2.5	-12.9	-2.4	-15.2	-1.3	-0.3	-9.16e-02
2992	ok	0.24	6.29e-02	1.25e-02	5.7	5.7	2.5	2.5	-16.1	-1.9	-12.8	-0.6	-0.1	-0.1
3049	ok	0.24	5.04e-02	1.04e-02	5.7	5.7	2.5	2.5	-22.7	-2.9	-8.5	8.84e-02	-9.52e-03	-9.77e-02
3064	ok	0.24	0.1	2.30e-02	5.7	5.7	2.5	2.5	-57.3	-1.8	-1.4	-6.45e-02	0.5	2.30e-04
3089	ok	0.24	0.1	2.45e-02	5.7	5.7	2.5	2.5	-44.7	-1.1	-11.5	-2.7	-0.4	-0.2
3118	ok	0.24	0.1	1.82e-02	5.7	5.7	2.5	2.5	-30.3	-8.1	-19.0	-2.5	-0.6	-0.3
3147	ok	0.24	0.1	1.20e-02	5.7	5.7	2.5	2.5	-15.1	-7.9	-16.0	-1.9	-0.4	-0.2
3176	ok	0.24	9.01e-02	9.93e-03	5.7	5.7	2.5	2.5	-12.9	-3.8	-12.9	-1.2	-0.2	-0.3
3205	ok	0.24	7.00e-02	1.00e-02	5.7	5.7	2.5	2.5	-17.4	-2.2	-10.9	-0.5	-0.1	-0.3
3257	ok	0.24	4.65e-02	9.21e-03	5.7	5.7	2.5	2.5	-18.6	-1.5	-9.5	8.23e-02	-1.12e-03	-0.2

3272	ok	0.24	0.1	3.18e-02	5.7	5.7	2.5	2.5	-79.8	-1.2	-3.0	2.1	-3.33e-02	0.1
3297	ok	0.24	0.1	3.31e-02	5.7	5.7	2.5	2.5	-78.4	-7.7	-17.9	2.5	0.4	-0.2
3326	ok	0.24	0.2	1.78e-02	5.7	5.7	2.5	2.5	-25.5	-12.3	-20.0	2.4	0.6	-0.3
3355	ok	0.24	0.1	1.15e-02	5.7	5.7	2.5	2.5	-6.5	-10.3	-14.7	1.9	0.4	-0.2
3384	ok	0.24	9.04e-02	9.21e-03	5.7	5.7	2.5	2.5	-11.6	-3.7	-11.0	7.63e-02	5.22e-02	-0.3
3413	ok	0.24	5.65e-02	8.65e-03	5.7	5.7	2.5	2.5	-13.5	-2.8	-8.5	0.6	0.2	-0.3
3465	ok	0.24	4.94e-02	7.36e-03	5.7	5.7	2.5	2.5	-14.4	0.2	-8.4	-1.37e-02	-7.81e-02	-0.3
3486	ok	0.24	0.2	4.21e-02	5.7	5.7	2.5	2.5	-105.7	-1.5	1.4	-2.7	-0.6	-0.7
3534	ok	0.24	0.3	5.59e-02	5.7	5.7	2.5	2.5	-90.0	-0.2	-5.6	2.6	0.4	-0.8
3591	ok	0.24	0.2	1.69e-02	5.7	5.7	2.5	2.5	-21.1	-8.8	-19.4	2.6	0.5	-0.2
3648	ok	0.24	0.1	1.18e-02	5.7	5.7	2.5	2.5	-4.8	-10.6	-11.6	2.0	0.4	-0.1
3705	ok	0.24	8.44e-02	8.91e-03	5.7	5.7	2.5	2.5	-10.4	-2.9	-9.9	1.3	0.3	-0.1
3762	ok	0.24	4.66e-02	7.87e-03	5.7	5.7	2.5	2.5	-14.3	-2.9	-6.4	0.7	0.1	-9.40e-02
3819	ok	0.24	4.17e-02	5.31e-03	5.7	5.7	2.5	2.5	-8.8	-0.7	-2.5	0.1	-4.45e-02	-9.27e-02
3864	ok	0.24	0.7	9.39e-02	5.7	5.7	2.5	2.5	-220.4	-5.2	-57.2	0.3	0.1	-9.60e-02
3889	ok	0.24	0.5	8.82e-02	5.7	5.7	2.5	2.5	-196.0	-32.3	-66.3	0.3	2.35e-02	-0.1
3918	ok	0.24	0.3	2.61e-02	5.7	5.7	2.5	2.5	63.1	-28.8	-43.4	0.1	-1.12e-02	-2.53e-02
3947	ok	0.24	0.2	8.10e-03	5.7	5.7	2.5	2.5	-6.5	-2.4	6.2	1.3	0.3	-0.3
3976	ok	0.24	8.95e-02	5.10e-03	5.7	5.7	2.5	2.5	-6.4	-0.9	7.1	-0.9	-0.2	-0.3
4005	ok	0.24	4.97e-02	3.93e-03	5.7	5.7	2.5	2.5	-3.6	-0.6	6.8	-0.3	-0.1	-0.2
4057	ok	0.24	2.80e-02	3.61e-03	5.7	5.7	2.5	2.5	-7.7	7.28e-02	-3.4	0.1	-1.34e-02	-0.2
4375	ok	0.35	1.0	0.4	17.0	16.2	9.0	8.8	-1192.1	-235.0	-378.2	2.9	0.3	0.2
4400	ok	0.43	1.0	0.3	27.8	29.1	6.1	7.2	-660.2	-226.8	-504.6	6.8	1.0	1.2
4429	ok	0.24	0.7	3.16e-02	5.7	5.7	2.5	2.5	-79.2	-30.7	2.2	-0.7	-0.1	-1.70e-02
4458	ok	0.24	0.2	6.70e-03	5.7	5.7	2.5	2.5	-7.3	0.4	5.7	1.5	0.4	-8.44e-02
4487	ok	0.24	0.1	5.12e-03	5.7	5.7	2.5	2.5	-5.4	0.3	7.2	1.7	0.4	2.96e-02
4516	ok	0.24	5.03e-02	3.82e-03	5.7	5.7	2.5	2.5	-4.1	1.8	-6.0	-0.4	-0.1	6.96e-02
4568	ok	0.24	3.27e-02	3.52e-03	5.7	5.7	2.5	2.5	8.51e-03	0.4	-3.4	0.3	1.05e-02	0.1
4626	ok	0.31	1.0	0.6	11.3	11.0	3.6	4.0	-1462.7	-443.6	-525.6	3.2	-0.2	-3.71e-02
4685	ok	0.40	1.0	0.2	22.9	23.5	4.1	3.9	-406.3	-122.0	-337.7	6.5	0.4	0.7
4744	ok	0.24	0.7	3.09e-02	5.7	5.7	2.5	2.5	-77.6	-10.4	1.7	-0.6	-0.1	-2.09e-02
4803	ok	0.24	0.2	4.16e-03	5.7	5.7	2.5	2.5	-0.6	2.4	3.2	2.8	0.7	0.3
4862	ok	0.24	0.1	5.83e-03	5.7	5.7	2.5	2.5	-6.2	9.82e-02	8.7	1.8	0.5	0.1
4921	ok	0.24	4.92e-02	4.52e-03	5.7	5.7	2.5	2.5	-5.2	1.2	-7.0	-0.4	-0.2	-8.47e-02
4980	ok	0.24	3.01e-02	2.71e-03	5.7	5.7	2.5	2.5	1.1	2.9	-3.2	0.3	-6.17e-02	2.07e-02

Nodo	**x/d**	**V N/M**	**ver. rid**	**Af pr-**	**Af pr+**	**Af sec-**	**Af sec+**	**N z**	**N o**	**N zo**	**M z**	**M o**	**M zo**
								-1462.66	-443.57	-525.58	-3.50	-0.75	-0.84
	0.43	1.00	0.60	27.77	29.14	9.04	8.78	63.13	20.57	130.05	6.75	1.03	1.24

Nodo	**Stato**	**Max tau** daN/cm2	**Ver V pr**	**Ver V sec**	**Af V pr**	**Af V sec**	**V pr** kN/ m	**V sec** kN/ m
343	ok	2.13						
402	ok	2.10						
461	ok	1.36						
520	ok	0.89						
579	ok	0.62						
638	ok	0.41						
697	ok	0.80						
772	ok	2.98						
797	ok	1.60						
826	ok	1.36						
855	ok	1.05						
884	ok	0.66						
913	ok	0.51						
965	ok	0.72						
980	ok	2.97						
1005	ok	1.56						
1034	ok	1.34						
1063	ok	1.04						
1092	ok	0.63						
1121	ok	0.39						
1173	ok	0.46						
1188	ok	1.05						
1236	ok	1.56						
1293	ok	1.33						
1350	ok	0.89						
1407	ok	0.62						
1464	ok	0.34						
1521	ok	0.48						
1536	ok	2.88						
1561	ok	1.50						
1590	ok	1.34						
1619	ok	1.03						
1648	ok	0.65						
1677	ok	0.38						
1729	ok	0.40						

1744	ok	2.88						
1769	ok	1.49						
1798	ok	1.33						
1827	ok	1.03						
1856	ok	0.63						
1885	ok	0.40						
1937	ok	0.40						
1952	ok	0.68						
2000	ok	1.53						
2057	ok	1.34						
2114	ok	0.88						
2171	ok	0.61						
2228	ok	0.34						
2285	ok	0.43						
2300	ok	2.93						
2325	ok	1.54						
2354	ok	1.36						
2383	ok	1.03						
2412	ok	0.63						
2441	ok	0.37						
2493	ok	0.40						
2508	ok	2.93						
2533	ok	1.51						
2562	ok	1.35						
2591	ok	1.03						
2620	ok	0.62						
2649	ok	0.38						
2701	ok	0.43						
2716	ok	0.65						
2764	ok	1.51						
2821	ok	1.34						
2878	ok	0.89						
2935	ok	0.64						
2992	ok	0.33						
3049	ok	0.44						
3064	ok	2.80						
3089	ok	1.48						
3118	ok	1.36						
3147	ok	1.05						
3176	ok	0.67						
3205	ok	0.37						
3257	ok	0.43						
3272	ok	2.80						
3297	ok	1.41						
3326	ok	1.35						
3355	ok	1.03						
3384	ok	0.63						
3413	ok	0.44						
3465	ok	0.42						
3486	ok	1.01						
3534	ok	2.91						
3591	ok	1.91						
3648	ok	1.42						
3705	ok	0.88						
3762	ok	0.38						
3819	ok	0.46						
3864	ok Av	9.02	0.41	6.86e-03	10.2	0.2	99.2	1.7
3889	ok	2.90						
3918	ok	1.98						
3947	ok	1.95						
3976	ok	0.90						
4005	ok	0.33						
4057	ok	0.46						
4375	ok Av	14.88	0.67	0.10	16.7	2.6	161.9	25.3
4400	ok Av	19.02	0.85	0.10	21.4	2.6	207.7	25.3
4429	ok	4.64						
4458	ok	1.92						
4487	ok	0.75						
4516	ok	0.43						
4568	ok	0.67						
4626	ok Av	14.66	0.66	0.11	16.4	2.8	158.9	27.3
4685	ok Av	19.32	0.87	0.09	21.8	2.3	211.3	22.3
4744	ok	4.86						
4803	ok	1.45						
4862	ok	0.71						
4921	ok	0.34						
4980	ok	0.70						
Nodo		**Max tau**	**Ver V pr**	**Ver V sec**	**Af V pr**	**Af V sec**	**V pr**	**V sec**

	19.32	0.87	0.11	21.82	2.82	211.34	27.34

Macro Setto	Spessore	Id Materiale	Id Criterio	Progettazione
	cm			
7	15.00	1	1	Singolo elemento NON DISSIPATIVO

Nodo	Stato	x/d	V N/M	ver. rid	Af pr-	Af pr+	Af sec-	Af sec+	N z	N o	N zo	M z	M o	M zo
									kN/ m	kN/ m	kN/ m	kN	kN	kN
353	ok	0.24	0.9	0.3	5.7	5.7	2.5	2.5	-595.6	-115.2	124.7	3.3	9.35e-02	-0.1
412	ok	0.24	0.8	0.2	5.7	5.7	2.5	2.5	-377.6	-74.8	108.5	3.3	0.5	-0.1
471	ok	0.24	0.4	5.70e-02	5.7	5.7	2.5	2.5	-98.0	-23.9	-4.0	-3.3	-0.7	9.04e-03
530	ok	0.24	0.2	3.83e-02	5.7	5.7	2.5	2.5	-86.4	-20.5	-25.7	-2.7	-0.6	1.65e-02
589	ok	0.24	0.2	2.87e-02	5.7	5.7	2.5	2.5	-64.0	-16.4	-4.0	-0.9	-0.2	-5.87e-03
648	ok	0.24	0.1	2.83e-02	5.7	5.7	2.5	2.5	-31.0	-9.4	24.1	-0.4	-0.2	1.84e-02
707	ok	0.24	0.1	6.68e-02	5.7	5.7	2.5	2.5	-157.5	-29.2	-35.4	-1.8	-0.2	1.34e-02
773	ok	0.26	1.0	0.2	6.6	5.7	3.3	2.5	-453.5	-5.6	88.3	3.3	0.2	5.09e-02
802	ok	0.24	0.8	0.2	5.7	5.7	2.5	2.5	-367.7	-72.1	88.3	3.3	0.5	0.1
831	ok	0.24	0.4	5.45e-02	5.7	5.7	2.5	2.5	-94.0	21.4	-12.6	-2.9	-0.6	-0.2
860	ok	0.24	0.2	3.42e-02	5.7	5.7	2.5	2.5	-79.0	25.9	-13.8	-2.3	-0.5	-0.2
889	ok	0.24	0.1	2.82e-02	5.7	5.7	2.5	2.5	-68.4	-12.4	-11.4	-0.7	-0.2	-0.2
918	ok	0.24	8.11e-02	3.18e-02	5.7	5.7	2.5	2.5	-63.9	-17.5	-28.2	-1.2	-0.4	-5.20e-02
975	ok	0.24	0.1	5.01e-02	5.7	5.7	2.5	2.5	-98.2	-10.6	-24.5	8.40e-02	0.4	-0.4
981	ok	0.24	0.3	8.47e-02	5.7	5.7	2.5	2.5	-212.0	-8.2	-12.3	0.9	0.4	1.80e-02
1010	ok	0.24	0.4	9.97e-02	5.7	5.7	2.5	2.5	-142.4	-16.2	37.1	-1.6	-0.3	0.3
1039	ok	0.24	0.3	4.14e-02	5.7	5.7	2.5	2.5	-62.5	-41.8	47.2	-1.4	-0.3	0.3
1068	ok	0.24	0.2	3.68e-02	5.7	5.7	2.5	2.5	-58.8	11.1	-22.6	1.2	0.2	-0.3
1097	ok	0.24	0.1	2.87e-02	5.7	5.7	2.5	2.5	-54.6	-7.9	-27.8	1.2	0.2	-0.4
1126	ok	0.24	9.50e-02	3.16e-02	5.7	5.7	2.5	2.5	-59.8	-5.7	-28.3	0.5	5.35e-02	-0.5
1183	ok	0.24	0.1	3.67e-02	5.7	5.7	2.5	2.5	-80.4	-2.1	-19.8	0.2	0.2	-0.4
1189	ok	0.24	0.2	5.88e-02	5.7	5.7	2.5	2.5	-147.7	-3.9	4.0	-0.1	-1.49e-02	0.1
1246	ok	0.24	0.3	5.96e-02	5.7	5.7	2.5	2.5	-136.3	-21.4	33.0	-1.3	-0.3	0.2
1303	ok	0.24	0.2	3.63e-02	5.7	5.7	2.5	2.5	-60.3	-21.9	43.6	-1.1	-0.2	0.2
1360	ok	0.24	0.1	3.34e-02	5.7	5.7	2.5	2.5	-63.7	4.0	-23.7	1.5	0.3	-0.2
1417	ok	0.24	0.1	3.00e-02	5.7	5.7	2.5	2.5	-56.7	-3.8	-28.2	1.5	0.3	-0.3
1474	ok	0.24	8.50e-02	2.98e-02	5.7	5.7	2.5	2.5	-58.5	-1.6	-25.0	0.8	0.2	-0.3
1531	ok	0.24	9.25e-02	3.12e-02	5.7	5.7	2.5	2.5	-58.0	-4.0	25.4	-0.2	9.31e-03	0.3
1537	ok	0.24	0.1	3.96e-02	5.7	5.7	2.5	2.5	-99.5	-1.8	0.1	-7.38e-02	-6.13e-03	-2.76e-02
1566	ok	0.24	0.2	4.28e-02	5.7	5.7	2.5	2.5	-98.6	-8.2	20.9	1.0	0.2	0.2
1595	ok	0.24	0.2	3.24e-02	5.7	5.7	2.5	2.5	-60.4	-16.0	35.0	1.0	0.2	0.2
1624	ok	0.24	0.1	2.39e-02	5.7	5.7	2.5	2.5	-41.5	6.4	-27.8	-1.0	-0.2	-0.2
1653	ok	0.24	0.1	2.63e-02	5.7	5.7	2.5	2.5	-54.8	1.2	-22.9	-0.7	-0.2	-0.2
1682	ok	0.24	0.1	2.69e-02	5.7	5.7	2.5	2.5	-60.7	2.2	-21.1	-0.3	-0.1	-0.2
1739	ok	0.24	9.96e-02	2.74e-02	5.7	5.7	2.5	2.5	-54.4	1.0	-13.5	7.12e-02	9.15e-02	-0.2
1745	ok	0.24	5.63e-02	3.20e-02	5.7	5.7	2.5	2.5	-80.4	-1.5	0.7	0.1	3.16e-02	1.02e-02
1774	ok	0.24	0.1	3.30e-02	5.7	5.7	2.5	2.5	-77.5	-5.5	15.4	2.54e-02	4.65e-02	0.2
1803	ok	0.24	0.2	2.84e-02	5.7	5.7	2.5	2.5	-45.2	-8.2	28.7	-1.1	-0.3	0.2
1832	ok	0.24	0.1	2.23e-02	5.7	5.7	2.5	2.5	-23.0	-6.7	30.1	-0.8	-0.2	0.2
1861	ok	0.24	0.1	2.54e-02	5.7	5.7	2.5	2.5	-45.3	1.8	-27.1	0.7	0.1	-0.2
1890	ok	0.24	0.1	2.55e-02	5.7	5.7	2.5	2.5	-41.3	-2.5	22.1	-0.3	-4.71e-02	0.3
1947	ok	0.24	9.75e-02	2.36e-02	5.7	5.7	2.5	2.5	-41.7	-1.8	26.9	-4.24e-02	8.13e-02	0.3
1953	ok	0.24	8.72e-02	2.69e-02	5.7	5.7	2.5	2.5	-67.6	-1.2	0.3	-4.38e-02	-1.95e-02	8.22e-02
2010	ok	0.24	0.1	2.73e-02	5.7	5.7	2.5	2.5	-66.9	-5.9	6.6	0.2	3.86e-02	-6.69e-03
2067	ok	0.24	0.2	2.36e-02	5.7	5.7	2.5	2.5	-39.9	-5.9	23.6	0.9	0.2	0.1
2124	ok	0.24	0.1	2.29e-02	5.7	5.7	2.5	2.5	-36.5	0.5	-31.8	1.3	0.3	-0.1
2181	ok	0.24	0.1	2.41e-02	5.7	5.7	2.5	2.5	-30.2	1.0	-27.5	-0.9	-0.2	-0.1
2238	ok	0.24	0.1	2.17e-02	5.7	5.7	2.5	2.5	-34.7	-1.3	-20.5	-0.5	-0.1	-0.1
2295	ok	0.24	9.90e-02	2.28e-02	5.7	5.7	2.5	2.5	-37.8	-3.2	24.7	-0.2	9.30e-03	0.2
2301	ok	0.24	5.88e-02	2.01e-02	5.7	5.7	2.5	2.5	-46.3	-0.1	0.5	-6.21e-02	0.3	-4.17e-02
2330	ok	0.24	7.90e-02	2.15e-02	5.7	5.7	2.5	2.5	-43.7	-1.0	-5.5	-8.72e-02	6.38e-02	-0.4
2359	ok	0.24	0.1	2.08e-02	5.7	5.7	2.5	2.5	-39.3	-4.2	23.8	1.2	0.3	0.2
2388	ok	0.24	0.1	1.86e-02	5.7	5.7	2.5	2.5	-26.1	-2.6	25.7	0.8	0.2	0.2
2417	ok	0.24	0.1	1.92e-02	5.7	5.7	2.5	2.5	-30.0	-3.0	22.1	0.8	0.2	0.3
2446	ok	0.24	0.1	1.91e-02	5.7	5.7	2.5	2.5	-32.2	-3.1	24.6	0.3	5.51e-02	0.3
2503	ok	0.24	0.1	1.96e-02	5.7	5.7	2.5	2.5	-30.9	-1.1	26.6	1.69e-02	7.77e-02	0.3
2509	ok	0.24	5.63e-02	1.91e-02	5.7	5.7	2.5	2.5	-45.8	3.17e-03	-0.2	2.0	-5.75e-02	0.1
2538	ok	0.24	7.41e-02	2.03e-02	5.7	5.7	2.5	2.5	-45.1	-0.9	-9.5	2.3	0.4	-0.3
2567	ok	0.24	0.1	1.94e-02	5.7	5.7	2.5	2.5	-37.7	-3.1	-21.3	2.2	0.5	-0.4
2596	ok	0.24	0.1	1.87e-02	5.7	5.7	2.5	2.5	-32.1	-1.4	-19.0	1.6	0.4	-0.4
2625	ok	0.24	0.1	1.91e-02	5.7	5.7	2.5	2.5	-29.8	-0.7	-27.6	1.0	0.2	-0.4
2654	ok	0.24	0.1	1.85e-02	5.7	5.7	2.5	2.5	-15.0	0.5	-24.8	0.4	7.25e-02	-0.4
2711	ok	0.24	0.1	1.85e-02	5.7	5.7	2.5	2.5	-26.9	-1.9	26.0	0.1	7.30e-02	0.3
2717	ok	0.24	9.74e-02	1.95e-02	5.7	5.7	2.5	2.5	-40.3	0.4	0.3	-2.0	-0.4	-0.8
2774	ok	0.24	0.1	2.09e-02	5.7	5.7	2.5	2.5	-33.1	1.4	2.3	-2.6	-0.5	-0.9

2831	ok	0.24	0.1	2.05e-02	5.7	5.7	2.5	2.5	-37.5	-3.5	-7.8	2.5	0.5	-0.3
2888	ok	0.24	0.1	1.94e-02	5.7	5.7	2.5	2.5	-21.0	-1.0	-24.1	-1.9	-0.4	-0.2
2945	ok	0.24	0.1	1.91e-02	5.7	5.7	2.5	2.5	-12.2	-0.5	-19.3	-1.3	-0.3	-0.2
3002	ok	0.24	0.1	1.85e-02	5.7	5.7	2.5	2.5	-14.2	-0.8	-23.5	0.5	0.1	-0.2
3059	ok	0.24	0.1	1.80e-02	5.7	5.7	2.5	2.5	-26.5	-3.1	26.8	0.1	5.86e-02	0.3
3065	ok	0.24	5.86e-02	1.88e-02	5.7	5.7	2.5	2.5	-35.4	-3.47e-02	-0.2	-2.0	5.12e-02	0.1
3094	ok	0.24	9.53e-02	2.08e-02	5.7	5.7	2.5	2.5	-37.3	-0.7	-1.2	-2.3	-9.04e-03	0.2
3123	ok	0.24	0.1	1.72e-02	5.7	5.7	2.5	2.5	-23.8	-6.0	-23.5	-1.4	-0.3	-0.2
3152	ok	0.24	0.1	1.47e-02	5.7	5.7	2.5	2.5	-20.2	-2.3	-22.8	-1.7	-0.3	-0.3
3181	ok	0.24	0.1	1.55e-02	5.7	5.7	2.5	2.5	-11.7	-1.5	-19.9	-1.1	-0.2	-0.4
3210	ok	0.24	0.1	1.58e-02	5.7	5.7	2.5	2.5	-14.9	-1.3	29.5	0.4	6.26e-02	0.3
3267	ok	0.24	0.1	1.61e-02	5.7	5.7	2.5	2.5	-22.2	-1.1	25.2	-5.78e-02	3.75e-02	0.3
3273	ok	0.24	8.19e-02	2.74e-02	5.7	5.7	2.5	2.5	-68.5	-1.5	-3.4	1.0	-2.05e-02	-6.05e-02
3302	ok	0.24	0.1	2.95e-02	5.7	5.7	2.5	2.5	-67.8	-8.6	-19.4	1.1	0.2	-0.3
3331	ok	0.24	0.1	1.80e-02	5.7	5.7	2.5	2.5	-24.3	-11.7	-23.0	1.3	0.3	-0.3
3360	ok	0.24	0.1	1.43e-02	5.7	5.7	2.5	2.5	-18.8	-5.1	-18.9	1.7	0.3	-0.4
3389	ok	0.24	0.1	1.37e-02	5.7	5.7	2.5	2.5	-19.2	-0.4	-21.6	1.2	0.3	-0.4
3418	ok	0.24	0.1	1.52e-02	5.7	5.7	2.5	2.5	-7.9	0.6	-19.6	0.6	0.2	-0.4
3475	ok	0.24	0.1	1.65e-02	5.7	5.7	2.5	2.5	-20.3	-2.3	26.0	7.01e-02	6.95e-02	0.3
3487	ok	0.24	0.1	3.45e-02	5.7	5.7	2.5	2.5	-86.3	-1.9	4.3	-1.8	-0.4	-0.2
3544	ok	0.24	0.2	4.44e-02	5.7	5.7	2.5	2.5	-92.7	-4.9	8.7	-1.7	-0.3	-0.6
3601	ok	0.24	0.2	1.79e-02	5.7	5.7	2.5	2.5	11.4	-3.0	-30.2	-1.4	-0.4	-0.4
3658	ok	0.24	0.1	1.30e-02	5.7	5.7	2.5	2.5	-17.7	-5.8	-19.0	1.9	0.4	-0.3
3715	ok	0.24	0.1	1.38e-02	5.7	5.7	2.5	2.5	-17.8	-3.0	-22.0	1.4	0.3	-0.3
3772	ok	0.24	9.80e-02	1.48e-02	5.7	5.7	2.5	2.5	-12.4	-0.9	28.7	-0.2	-5.06e-02	0.2
3829	ok	0.24	9.38e-02	1.61e-02	5.7	5.7	2.5	2.5	-19.6	-1.4	17.4	-0.2	2.30e-02	0.2
3865	ok	0.24	0.7	8.33e-02	5.7	5.7	2.5	2.5	-193.6	-4.7	-54.2	3.8	1.1	-0.9
3894	ok	0.24	0.5	6.95e-02	5.7	5.7	2.5	2.5	-142.8	23.9	-36.7	2.6	0.7	-2.0
3923	ok	0.24	0.2	2.81e-02	5.7	5.7	2.5	2.5	16.4	-17.7	-29.3	-0.9	-0.4	-0.3
3952	ok	0.24	0.2	1.10e-02	5.7	5.7	2.5	2.5	1.5	6.6	11.8	-1.4	-0.4	0.3
3981	ok	0.24	0.1	7.09e-03	5.7	5.7	2.5	2.5	-3.7	6.7	13.2	-0.6	-0.2	0.3
4010	ok	0.24	9.25e-02	8.48e-03	5.7	5.7	2.5	2.5	-6.6	3.6	15.4	-0.2	2.71e-02	0.3
4067	ok	0.24	7.35e-02	1.21e-02	5.7	5.7	2.5	2.5	-20.1	-0.6	16.8	-0.1	4.22e-02	0.2
4376	ok	0.31	1.0	0.4	18.2	11.3	9.4	5.0	-1101.6	-240.4	-366.5	20.9	2.1	1.4
4405	ok	0.41	1.0	0.2	23.4	25.0	6.3	6.3	-321.0	-135.2	-402.5	46.7	7.2	8.6
4434	ok	0.24	0.6	3.65e-02	5.7	5.7	2.5	2.5	-90.5	-26.1	8.3	-5.5	-1.1	7.31e-02
4463	ok	0.24	0.1	7.28e-03	5.7	5.7	2.5	2.5	4.5	14.6	10.5	-1.8	-0.4	8.56e-03
4492	ok	0.24	0.1	6.70e-03	5.7	5.7	2.5	2.5	-2.3	14.3	12.1	-1.3	-0.3	4.60e-02
4521	ok	0.24	8.59e-02	7.43e-03	5.7	5.7	2.5	2.5	-6.2	2.7	10.7	-0.4	-4.39e-02	0.1
4578	ok	0.24	6.26e-02	1.02e-02	5.7	5.7	2.5	2.5	-8.8	0.5	12.9	0.3	0.1	0.2
4636	ok	0.32	1.0	0.5	14.3	11.6	4.7	6.4	-1246.4	-376.2	-439.6	22.2	-1.5	-0.4
4695	ok	0.38	1.0	0.2	19.2	19.8	4.4	3.2	-212.7	-109.2	-318.2	44.7	2.6	4.6
4754	ok	0.24	0.6	3.43e-02	5.7	5.7	2.5	2.5	-85.4	0.9	8.3	-4.9	-1.1	-0.3
4813	ok	0.24	0.2	8.90e-03	5.7	5.7	2.5	2.5	6.9	21.8	8.8	-1.7	-0.4	-8.14e-02
4872	ok	0.24	0.1	7.99e-03	5.7	5.7	2.5	2.5	-2.2	18.8	11.9	-1.2	-0.3	-2.10e-02
4931	ok	0.24	8.57e-02	6.28e-03	5.7	5.7	2.5	2.5	-4.8	6.4	8.9	-0.3	-9.52e-02	-7.13e-03
4990	ok	0.24	5.49e-02	7.27e-03	5.7	5.7	2.5	2.5	-10.8	4.0	12.0	0.1	1.02e-02	7.62e-02

Nodo	**x/d**	**V N/M**	**ver. rid**	**Af pr-**	**Af pr+**	**Af sec-**	**Af sec+**	**N z**	**N o**	**N zo**	**M z**	**M o**	**M zo**
								-1246.44	-376.20	-439.61	-5.45	-1.49	-1.95
	0.41	1.00	0.49	23.38	25.00	9.42	6.37	16.37	25.91	124.68	46.73	7.22	8.55

Nodo	**Stato**	**Max tau** daN/cm2	**Ver V pr**	**Ver V sec**	**Af V pr**	**Af V sec**	**V pr** kN/ m	**V sec** kN/ m
353	ok	1.66						
412	ok	1.56						
471	ok	1.03						
530	ok	0.69						
589	ok	0.46						
648	ok	0.49						
707	ok	1.53						
773	ok	2.20						
802	ok	1.16						
831	ok	1.00						
860	ok	0.78						
889	ok	0.48						
918	ok	0.62						
975	ok	0.71						
981	ok	2.17						
1010	ok	1.14						
1039	ok	0.93						
1068	ok	0.76						
1097	ok	0.51						
1126	ok	0.33						
1183	ok	0.34						
1189	ok	1.29						
1246	ok	1.12						

1303	ok	0.95						
1360	ok	0.66						
1417	ok	0.51						
1474	ok	0.28						
1531	ok	0.47						
1537	ok	1.76						
1566	ok	0.82						
1595	ok	0.71						
1624	ok	0.56						
1653	ok	0.35						
1682	ok	0.29						
1739	ok	0.38						
1745	ok	1.75						
1774	ok	0.83						
1803	ok	0.72						
1832	ok	0.56						
1861	ok	0.36						
1890	ok	0.23						
1947	ok	0.33						
1953	ok	0.66						
2010	ok	0.92						
2067	ok	0.74						
2124	ok	0.51						
2181	ok	0.35						
2238	ok	0.22						
2295	ok	0.44						
2301	ok	1.85						
2330	ok	0.89						
2359	ok	0.76						
2388	ok	0.58						
2417	ok	0.36						
2446	ok	0.26						
2503	ok	0.37						
2509	ok	1.83						
2538	ok	0.88						
2567	ok	0.76						
2596	ok	0.58						
2625	ok	0.35						
2654	ok	0.23						
2711	ok	0.35						
2717	ok	0.69						
2774	ok	0.89						
2831	ok	0.77						
2888	ok	0.52						
2945	ok	0.39						
3002	ok	0.23						
3059	ok	0.42						
3065	ok	1.72						
3094	ok	0.83						
3123	ok	0.76						
3152	ok	0.61						
3181	ok	0.41						
3210	ok	0.26						
3267	ok	0.38						
3273	ok	1.73						
3302	ok	0.80						
3331	ok	0.76						
3360	ok	0.60						
3389	ok	0.38						
3418	ok	0.29						
3475	ok	0.28						
3487	ok	1.19						
3544	ok	2.29						
3601	ok	1.26						
3658	ok	0.89						
3715	ok	0.50						
3772	ok	0.26						
3829	ok	0.35						
3865	ok Av	6.86	0.31	9.09e-03	7.8	0.2	75.4	2.2
3894	ok	2.41						
3923	ok	1.31						
3952	ok	1.22						
3981	ok	0.51						
4010	ok	0.18						
4067	ok	0.32						
4376	ok Av	12.19	0.54	0.08	13.7	1.9	133.2	18.1
4405	ok Av	14.49	0.65	0.09	16.4	2.1	158.8	20.6
4434	ok	3.33						
4463	ok	1.16						

4492	ok	0.41						
4521	ok	0.26						
4578	ok	0.36						
4636	ok Av	10.86	0.47	0.18	11.6	4.5	112.6	43.3
4695	ok Av	17.09	0.76	0.14	19.1	3.5	185.0	33.7
4754	ok	3.40						
4813	ok	0.92						
4872	ok	0.43						
4931	ok	0.24						
4990	ok	0.40						

Nodo	Max tau	Ver V pr	Ver V sec	Af V pr	Af V sec	V pr	V sec
	17.09	0.76	0.18	19.10	4.47	184.96	43.26

Macro Setto	Spessore	Id Materiale	Id Criterio	Progettazione
	cm			
8	15.00	1	1	Singolo elemento NON DISSIPATIVO

Nodo	Stato	x/d	V N/M	ver. rid	Af pr-	Af pr+	Af sec-	Af sec+	N z	N o	N zo	M z	M o	M zo
									kN/ m	kN/ m	kN/ m	kN	kN	kN
358	ok	0.24	0.7	0.2	5.7	5.7	2.5	2.5	-516.8	-93.8	125.2	-3.5	-0.5	6.05e-02
417	ok	0.24	0.5	5.03e-02	5.7	5.7	2.5	2.5	-93.0	-24.1	1.2	3.5	0.8	-3.76e-02
476	ok	0.24	0.2	3.23e-02	5.7	5.7	2.5	2.5	-71.7	-18.9	-23.0	2.6	0.6	-3.35e-02
535	ok	0.24	0.2	2.24e-02	5.7	5.7	2.5	2.5	-52.3	-8.9	12.9	1.7	0.4	-4.52e-02
594	ok	0.24	0.1	2.08e-02	5.7	5.7	2.5	2.5	-37.1	-7.1	-6.3	0.9	0.2	-3.12e-02
653	ok	0.24	5.81e-02	2.98e-02	5.7	5.7	2.5	2.5	-56.2	-14.7	-23.4	0.3	-3.25e-02	-3.21e-02
775	ok	0.24	0.9	0.2	5.7	5.7	2.5	2.5	-454.3	-64.9	84.9	-3.6	-0.6	-0.2
804	ok	0.24	0.5	5.46e-02	5.7	5.7	2.5	2.5	-87.0	18.1	-5.8	3.2	0.7	0.2
833	ok	0.24	0.2	2.95e-02	5.7	5.7	2.5	2.5	-67.9	26.0	-9.5	2.3	0.5	0.2
862	ok	0.24	8.03e-02	2.15e-02	5.7	5.7	2.5	2.5	-50.4	6.4	7.1	1.5	0.3	0.2
891	ok	0.24	4.78e-02	1.96e-02	5.7	5.7	2.5	2.5	-37.0	-12.1	-14.6	0.8	0.2	0.2
921	ok	0.24	6.76e-02	2.53e-02	5.7	5.7	2.5	2.5	-55.8	-15.7	-16.1	-4.84e-02	-0.1	0.2
983	ok	0.24	0.4	0.1	5.7	5.7	2.5	2.5	-264.8	-33.6	49.4	-0.5	-0.2	-0.4
1012	ok	0.24	0.3	4.69e-02	5.7	5.7	2.5	2.5	-86.9	-42.3	45.3	2.2	0.5	-0.3
1041	ok	0.24	0.2	3.15e-02	5.7	5.7	2.5	2.5	-45.0	11.5	-11.8	-1.7	-0.3	0.3
1070	ok	0.24	0.1	2.16e-02	5.7	5.7	2.5	2.5	-49.6	-3.5	-7.3	-1.1	-0.2	0.3
1099	ok	0.24	5.96e-02	2.07e-02	5.7	5.7	2.5	2.5	-46.0	-1.0	-10.9	-0.5	-0.1	0.3
1129	ok	0.24	5.72e-02	2.27e-02	5.7	5.7	2.5	2.5	-52.9	5.73e-02	-11.1	7.88e-02	4.38e-02	0.3
1192	ok	0.24	0.3	6.85e-02	5.7	5.7	2.5	2.5	-168.6	-22.6	21.6	2.97e-02	2.33e-02	-3.12e-02
1249	ok	0.24	0.2	4.24e-02	5.7	5.7	2.5	2.5	-75.0	-20.8	26.5	-1.9	-0.4	-0.1
1306	ok	0.24	0.1	2.63e-02	5.7	5.7	2.5	2.5	-51.8	1.5	-12.5	-2.0	-0.4	8.46e-02
1363	ok	0.24	8.06e-02	2.22e-02	5.7	5.7	2.5	2.5	-39.4	-8.91e-02	-15.2	1.4	0.3	9.12e-02
1420	ok	0.24	4.79e-02	2.09e-02	5.7	5.7	2.5	2.5	-41.4	0.8	-13.8	0.7	0.1	8.43e-02
1477	ok	0.24	3.62e-02	2.24e-02	5.7	5.7	2.5	2.5	-53.3	-1.6	-11.7	0.2	4.01e-02	7.78e-02
1539	ok	0.24	0.2	4.62e-02	5.7	5.7	2.5	2.5	-114.8	-5.4	11.5	-0.3	-9.23e-02	1.09e-02
1568	ok	0.24	0.2	3.41e-02	5.7	5.7	2.5	2.5	-74.1	-13.6	26.4	-2.2	-0.5	-0.2
1597	ok	0.24	0.1	2.19e-02	5.7	5.7	2.5	2.5	-34.5	-9.3	26.6	-1.6	-0.4	-0.2
1626	ok	0.24	6.94e-02	1.93e-02	5.7	5.7	2.5	2.5	-41.6	-0.7	-12.9	1.2	0.3	0.3
1655	ok	0.24	5.14e-02	1.94e-02	5.7	5.7	2.5	2.5	-43.2	0.4	-14.7	0.6	0.1	0.2
1685	ok	0.24	3.46e-02	2.13e-02	5.7	5.7	2.5	2.5	-50.7	3.89e-02	-11.7	-3.36e-02	-2.39e-02	0.2
1747	ok	0.24	0.2	3.76e-02	5.7	5.7	2.5	2.5	-93.7	-4.3	8.0	-0.2	-3.00e-02	-2.70e-02
1776	ok	0.24	0.2	3.08e-02	5.7	5.7	2.5	2.5	-71.3	-10.4	19.0	-0.2	-2.75e-02	-1.07e-02
1805	ok	0.24	0.1	2.20e-02	5.7	5.7	2.5	2.5	-38.2	-11.3	20.5	1.6	0.3	-0.2
1834	ok	0.24	8.70e-02	1.85e-02	5.7	5.7	2.5	2.5	-33.9	-0.2	-17.0	-1.2	-0.3	0.3
1863	ok	0.24	6.73e-02	1.90e-02	5.7	5.7	2.5	2.5	-37.3	0.5	-18.0	-0.6	-0.1	0.2
1893	ok	0.24	4.18e-02	1.95e-02	5.7	5.7	2.5	2.5	-45.9	0.4	-11.8	-9.00e-03	4.18e-02	0.3
1956	ok	0.24	0.2	3.27e-02	5.7	5.7	2.5	2.5	-82.1	-9.4	1.7	-3.89e-02	1.52e-02	-2.43e-02
2013	ok	0.24	0.2	2.69e-02	5.7	5.7	2.5	2.5	-63.4	-9.4	15.0	-6.80e-02	-1.31e-02	-1.30e-02
2070	ok	0.24	0.1	2.19e-02	5.7	5.7	2.5	2.5	-38.4	-7.8	18.7	1.3	0.3	-6.58e-02
2127	ok	0.24	6.95e-02	1.86e-02	5.7	5.7	2.5	2.5	-35.9	-2.5	-18.3	-1.4	-0.3	9.08e-02
2184	ok	0.24	4.59e-02	1.79e-02	5.7	5.7	2.5	2.5	-38.9	-2.6	-15.5	-0.7	-0.1	8.70e-02
2241	ok	0.24	4.86e-02	1.70e-02	5.7	5.7	2.5	2.5	-38.6	-3.5	-12.0	0.1	2.04e-02	3.84e-03
2303	ok	0.24	0.2	2.47e-02	5.7	5.7	2.5	2.5	-61.5	-0.7	4.9	-0.2	-8.13e-02	1.44e-02
2332	ok	0.24	0.1	2.19e-02	5.7	5.7	2.5	2.5	-50.6	-4.7	12.9	-0.2	-5.20e-02	-1.09e-02
2361	ok	0.24	9.15e-02	1.79e-02	5.7	5.7	2.5	2.5	-34.8	-5.6	14.3	-0.1	-2.72e-02	-5.53e-03
2390	ok	0.24	7.14e-02	1.48e-02	5.7	5.7	2.5	2.5	-24.3	-0.3	-15.2	8.55e-02	1.56e-02	0.3
2419	ok	0.24	5.37e-02	1.50e-02	5.7	5.7	2.5	2.5	-31.5	-2.1	-14.3	0.2	4.64e-02	5.90e-02
2449	ok	0.24	4.08e-02	1.62e-02	5.7	5.7	2.5	2.5	-36.3	-1.9	-12.5	-1.90e-02	-4.16e-02	5.70e-02
2511	ok	0.24	0.2	2.19e-02	5.7	5.7	2.5	2.5	-45.5	1.2	3.7	0.2	8.13e-02	1.28e-02
2540	ok	0.24	0.1	2.04e-02	5.7	5.7	2.5	2.5	-46.0	-1.8	6.0	-0.2	-5.47e-02	-5.02e-03
2569	ok	0.24	9.76e-02	1.74e-02	5.7	5.7	2.5	2.5	-33.3	-4.6	14.6	-0.1	-3.12e-02	-1.67e-02
2598	ok	0.24	8.10e-02	1.46e-02	5.7	5.7	2.5	2.5	-24.1	-2.7	15.1	7.65e-02	1.03e-02	-8.28e-03
2627	ok	0.24	5.63e-02	1.44e-02	5.7	5.7	2.5	2.5	-24.9	0.7	-13.1	-0.2	-5.43e-02	6.35e-02

2657	ok	0.24	4.48e-02	1.39e-02	5.7	5.7	2.5	2.5	-30.3	7.22e-02	-12.1	-1.41e-02	1.69e-02	6.62e-02
2720	ok	0.24	0.2	2.35e-02	5.7	5.7	2.5	2.5	-36.8	-2.5	3.3	3.5	0.7	1.65e-02
2777	ok	0.24	0.2	1.93e-02	5.7	5.7	2.5	2.5	-28.9	-2.3	6.9	2.8	0.6	0.1
2834	ok	0.24	0.1	1.69e-02	5.7	5.7	2.5	2.5	-31.1	-3.3	14.4	-0.1	-3.06e-02	-5.59e-03
2891	ok	0.24	7.61e-02	1.43e-02	5.7	5.7	2.5	2.5	-17.5	-2.1	-17.3	-0.5	-9.37e-02	1.79e-02
2948	ok	0.24	5.13e-02	1.31e-02	5.7	5.7	2.5	2.5	-26.1	-1.8	-14.0	-0.3	-7.28e-02	1.28e-02
3005	ok	0.24	4.64e-02	1.13e-02	5.7	5.7	2.5	2.5	-24.8	-2.8	-9.2	-0.1	-1.15e-02	9.91e-03
3067	ok	0.24	0.2	1.55e-02	5.7	5.7	2.5	2.5	-33.7	0.1	2.6	3.1	0.5	0.2
3096	ok	0.24	0.1	1.61e-02	5.7	5.7	2.5	2.5	-30.8	-0.8	5.9	2.4	0.4	0.3
3125	ok	0.24	0.1	1.30e-02	5.7	5.7	2.5	2.5	-24.3	-1.1	8.4	-0.1	-3.72e-02	-1.59e-03
3154	ok	0.24	7.51e-02	9.85e-03	5.7	5.7	2.5	2.5	-12.5	-1.3	-11.8	0.3	5.53e-02	6.78e-02
3183	ok	0.24	5.59e-02	9.61e-03	5.7	5.7	2.5	2.5	-18.4	-1.3	-10.4	0.1	4.04e-02	6.95e-02
3213	ok	0.24	4.02e-02	9.45e-03	5.7	5.7	2.5	2.5	-20.3	-0.1	-8.7	-1.83e-02	-2.19e-02	6.01e-02
3275	ok	0.24	0.2	1.35e-02	5.7	5.7	2.5	2.5	-27.4	-7.44e-02	-0.6	-0.3	-1.79e-02	4.47e-02
3304	ok	0.24	0.1	1.59e-02	5.7	5.7	2.5	2.5	-25.6	1.3	7.1	-2.5	-0.5	0.2
3333	ok	0.24	0.1	1.26e-02	5.7	5.7	2.5	2.5	-21.9	-1.0	6.4	-1.7	-0.4	0.3
3362	ok	0.24	8.18e-02	9.00e-03	5.7	5.7	2.5	2.5	-11.2	-1.8	-11.0	-9.14e-02	-2.41e-02	7.39e-02
3391	ok	0.24	4.62e-02	8.52e-03	5.7	5.7	2.5	2.5	-12.7	1.0	-8.4	-0.2	-4.98e-02	6.91e-02
3421	ok	0.24	4.92e-02	7.59e-03	5.7	5.7	2.5	2.5	-12.0	1.2	-6.7	1.68e-02	4.63e-02	6.43e-02
3490	ok	0.24	0.2	1.13e-02	5.7	5.7	2.5	2.5	-10.1	-1.7	4.0	2.5	0.5	-0.8
3547	ok	0.24	0.1	1.78e-02	5.7	5.7	2.5	2.5	-26.0	-1.2	-8.9	2.6	0.4	-7.40e-02
3604	ok	0.24	0.1	1.15e-02	5.7	5.7	2.5	2.5	-21.3	-3.3	6.5	-2.0	-0.5	6.18e-02
3661	ok	0.24	7.98e-02	8.23e-03	5.7	5.7	2.5	2.5	-7.0	-1.2	2.8	1.0	0.2	0.1
3718	ok	0.24	4.13e-02	7.83e-03	5.7	5.7	2.5	2.5	-15.1	-1.5	-7.9	-0.7	-0.1	8.82e-02
3775	ok	0.24	3.30e-02	5.54e-03	5.7	5.7	2.5	2.5	-10.5	-0.6	-1.7	0.1	2.16e-02	-8.06e-02
3867	ok	0.24	0.1	1.40e-02	5.7	5.7	2.5	2.5	7.3	0.6	2.2	0.2	2.17e-02	-5.56e-02
3896	ok	0.24	0.2	2.40e-02	5.7	5.7	2.5	2.5	-43.5	13.7	13.8	6.07e-02	-2.60e-02	-0.1
3925	ok	0.24	0.1	1.77e-02	5.7	5.7	2.5	2.5	3.0	-8.7	-12.6	1.5	-3.04e-02	0.3
3954	ok	0.24	9.58e-02	4.80e-03	5.7	5.7	2.5	2.5	-7.2	-2.6	5.0	0.8	0.2	0.2
3983	ok	0.24	4.65e-02	3.88e-03	5.7	5.7	2.5	2.5	-5.8	-0.8	4.8	0.5	0.2	0.3
4013	ok	0.24	3.12e-02	4.02e-03	5.7	5.7	2.5	2.5	-9.5	-1.48e-02	-2.3	0.1	2.82e-02	-0.1
4378	ok	0.24	0.2	0.0	5.7	5.7	2.5	2.5	32.5	26.8	-18.2	0.2	0.2	-9.31e-02
4407	ok	0.24	0.4	8.17e-02	5.7	5.7	2.5	2.5	-162.8	-61.4	-16.6	-1.6	-0.4	0.1
4436	ok	0.24	0.3	1.20e-02	5.7	5.7	2.5	2.5	24.4	4.1	10.3	-0.6	-7.98e-02	-3.39e-02
4465	ok	0.24	0.1	5.48e-03	5.7	5.7	2.5	2.5	-8.5	-0.4	4.3	-2.4	-0.4	8.96e-02
4494	ok	0.24	4.20e-02	3.89e-03	5.7	5.7	2.5	2.5	-5.6	-1.2	2.7	-0.7	-6.61e-02	0.1
4524	ok	0.24	3.51e-02	3.08e-03	5.7	5.7	2.5	2.5	-3.2	-2.2	4.2	0.4	9.58e-02	0.2
4700	ok	0.24	0.4	8.87e-02	5.7	5.7	2.5	2.5	-168.0	-28.4	-39.6	-2.3	-0.4	-0.2
4759	ok	0.24	0.4	1.40e-02	5.7	5.7	2.5	2.5	97.3	21.7	30.2	2.31e-02	-8.23e-02	3.81e-03
4818	ok	0.24	0.1	7.48e-03	5.7	5.7	2.5	2.5	-11.9	-2.7	-4.0	-1.7	-0.3	-0.1
4877	ok	0.24	4.38e-02	5.15e-03	5.7	5.7	2.5	2.5	-6.6	-3.4	7.3	-0.8	-9.44e-02	-0.1
4936	ok	0.24	2.03e-02	2.77e-03	5.7	5.7	2.5	2.5	-2.5	-1.5	4.7	0.4	-2.89e-02	9.63e-03

Nodo	**x/d**	**V N/M**	**ver. rid**	**Af pr-**	**Af pr+**	**Af sec-**	**Af sec+**	**N z**	**N o**	**N zo**	**M z**	**M o**	**M zo**
								-516.79	-93.76	-39.64	-3.61	-0.60	-0.81
	0.24	0.94	0.22	5.65	5.65	2.51	2.51	97.26	26.75	125.20	3.49	0.79	0.31

Nodo	**Stato**	**Max tau** daN/cm2	**Ver V pr**	**Ver V sec**	**Af V pr**	**Af V sec**	**V pr** kN/ m	**V sec** kN/ m
358	ok	1.54						
417	ok	1.33						
476	ok	0.87						
535	ok	0.59						
594	ok	0.37						
653	ok	0.80						
775	ok	1.77						
804	ok	1.27						
833	ok	0.99						
862	ok	0.62						
891	ok	0.45						
921	ok	0.67						
983	ok	1.78						
1012	ok	1.18						
1041	ok	0.98						
1070	ok	0.58						
1099	ok	0.40						
1129	ok	0.46						
1192	ok	1.68						
1249	ok	1.26						
1306	ok	0.88						
1363	ok	0.60						
1420	ok	0.33						
1477	ok	0.51						
1539	ok	1.83						
1568	ok	1.27						
1597	ok	1.00						
1626	ok	0.62						

1655	ok	0.39						
1685	ok	0.39						
1747	ok	1.82						
1776	ok	1.26						
1805	ok	1.00						
1834	ok	0.60						
1863	ok	0.40						
1893	ok	0.41						
1956	ok	1.66						
2013	ok	1.26						
2070	ok	0.87						
2127	ok	0.58						
2184	ok	0.34						
2241	ok	0.46						
2303	ok	1.80						
2332	ok	1.25						
2361	ok	0.98						
2390	ok	0.60						
2419	ok	0.37						
2449	ok	0.41						
2511	ok	1.80						
2540	ok	1.24						
2569	ok	0.98						
2598	ok	0.59						
2627	ok	0.39						
2657	ok	0.40						
2720	ok	1.80						
2777	ok	1.31						
2834	ok	0.90						
2891	ok	0.60						
2948	ok	0.33						
3005	ok	0.43						
3067	ok	1.94						
3096	ok	1.31						
3125	ok	1.00						
3154	ok	0.62						
3183	ok	0.37						
3213	ok	0.41						
3275	ok	1.94						
3304	ok	1.29						
3333	ok	1.01						
3362	ok	0.62						
3391	ok	0.42						
3421	ok	0.39						
3490	ok	1.89						
3547	ok	2.03						
3604	ok	1.67						
3661	ok	0.67						
3718	ok	0.35						
3775	ok	0.42						
3867	ok	0.81						
3896	ok	2.59						
3925	ok	1.66						
3954	ok	0.70						
3983	ok	0.33						
4013	ok	0.42						
4378	ok	1.06						
4407	ok Av	6.88	0.31	0.04	7.7	1.0	75.0	10.1
4436	ok	1.62						
4465	ok	0.92						
4494	ok	0.35						
4524	ok	0.54						
4700	ok Av	7.12	0.31	0.08	7.8	2.1	75.8	20.1
4759	ok	1.18						
4818	ok	0.88						
4877	ok	0.31						
4936	ok	0.55						
Nodo		**Max tau**	**Ver V pr**	**Ver V sec**	**Af V pr**	**Af V sec**	**V pr**	**V sec**
		7.12	0.31	0.08	7.83	2.08	75.84	20.14

Macro Setto	Spessore	Id Materiale	Id Criterio	Progettazione
	cm			
9	15.00	1	1	Singolo elemento NON DISSIPATIVO

Nodo	Stato	x/d	V N/M	ver. rid	Af pr-	Af pr+	Af sec-	Af sec+	N z	N o	N zo	M z	M o	M zo
									kN/ m	kN/ m	kN/ m	kN	kN	kN
360	ok	0.24	0.6	0.2	5.7	5.7	2.5	2.5	-530.7	-94.0	126.6	-3.51e-02	-3.91e-02	2.29e-03
419	ok	0.24	0.5	4.91e-02	5.7	5.7	2.5	2.5	-97.3	-25.1	3.8	3.5	0.8	-5.46e-02
478	ok	0.24	0.2	3.32e-02	5.7	5.7	2.5	2.5	-74.4	-20.5	-21.9	2.6	0.6	-4.20e-02
537	ok	0.24	0.2	2.42e-02	5.7	5.7	2.5	2.5	-56.6	-10.5	13.9	1.7	0.4	-6.55e-02
596	ok	0.24	0.1	2.17e-02	5.7	5.7	2.5	2.5	-41.9	-8.7	-4.6	0.9	0.2	-5.95e-02
655	ok	0.24	5.33e-02	2.99e-02	5.7	5.7	2.5	2.5	-55.6	-14.6	-19.8	0.2	-5.64e-02	-4.16e-02
776	ok	0.24	0.9	0.2	5.7	5.7	2.5	2.5	-458.2	-58.0	81.3	-0.3	-8.17e-02	-9.70e-03
805	ok	0.24	0.5	5.48e-02	5.7	5.7	2.5	2.5	-92.0	12.2	-2.5	3.2	0.7	0.2
834	ok	0.24	0.2	3.12e-02	5.7	5.7	2.5	2.5	-71.8	21.1	-8.1	2.4	0.5	0.2
863	ok	0.24	0.1	2.30e-02	5.7	5.7	2.5	2.5	-57.8	-8.6	1.7	1.6	0.3	0.2
892	ok	0.24	5.23e-02	2.00e-02	5.7	5.7	2.5	2.5	-40.4	-5.3	6.1	0.7	0.1	0.2
923	ok	0.24	6.03e-02	2.47e-02	5.7	5.7	2.5	2.5	-54.3	-14.1	-12.0	-7.77e-02	-0.2	0.2
984	ok	0.24	0.4	0.1	5.7	5.7	2.5	2.5	-266.7	-33.0	45.8	-0.2	-3.09e-02	-3.26e-02
1013	ok	0.24	0.2	4.84e-02	5.7	5.7	2.5	2.5	-90.9	-42.8	46.0	0.2	4.66e-02	-1.93e-02
1042	ok	0.24	0.2	3.23e-02	5.7	5.7	2.5	2.5	-74.7	3.5	1.1	0.2	6.64e-02	0.4
1071	ok	0.24	0.1	2.30e-02	5.7	5.7	2.5	2.5	-52.3	-3.9	-5.6	-1.1	-0.2	0.3
1100	ok	0.24	5.37e-02	2.08e-02	5.7	5.7	2.5	2.5	-46.9	-0.6	-8.9	-0.5	-0.1	0.3
1131	ok	0.24	5.09e-02	2.03e-02	5.7	5.7	2.5	2.5	-50.1	0.2	-5.9	-3.85e-04	8.50e-03	0.3
1194	ok	0.24	0.3	6.90e-02	5.7	5.7	2.5	2.5	-169.5	-23.9	23.1	-3.53e-02	1.42e-02	-2.30e-02
1251	ok	0.24	0.2	4.38e-02	5.7	5.7	2.5	2.5	-88.7	-22.6	41.0	-8.12e-02	-1.64e-02	-1.27e-02
1308	ok	0.24	0.1	2.73e-02	5.7	5.7	2.5	2.5	-56.7	-0.3	-8.9	-2.0	-0.4	8.88e-02
1365	ok	0.24	6.21e-02	2.28e-02	5.7	5.7	2.5	2.5	-41.1	-0.6	-11.4	1.4	0.3	9.48e-02
1422	ok	0.24	3.92e-02	2.06e-02	5.7	5.7	2.5	2.5	-41.1	-3.5	-12.1	0.7	0.1	9.08e-02
1479	ok	0.24	3.26e-02	1.98e-02	5.7	5.7	2.5	2.5	-48.5	-1.5	-7.8	0.2	2.30e-02	8.91e-02
1540	ok	0.24	0.2	4.70e-02	5.7	5.7	2.5	2.5	-116.6	-5.0	12.6	-0.3	-8.45e-02	6.41e-03
1569	ok	0.24	0.1	3.52e-02	5.7	5.7	2.5	2.5	-78.3	-14.5	26.0	-0.2	-5.32e-02	-1.39e-02
1598	ok	0.24	9.37e-02	2.29e-02	5.7	5.7	2.5	2.5	-38.5	-10.1	26.1	-0.2	-4.00e-02	-1.03e-02
1627	ok	0.24	6.19e-02	1.90e-02	5.7	5.7	2.5	2.5	-43.5	-1.0	-8.9	1.2	0.2	0.3
1656	ok	0.24	3.87e-02	1.82e-02	5.7	5.7	2.5	2.5	-43.5	-3.3	-9.4	0.6	0.1	0.2
1687	ok	0.24	2.36e-02	1.88e-02	5.7	5.7	2.5	2.5	-42.6	2.00e-02	-9.5	2.11e-02	-7.30e-03	0.3
1748	ok	0.24	0.1	3.85e-02	5.7	5.7	2.5	2.5	-95.8	-4.2	8.7	-0.2	-2.63e-02	-2.59e-02
1777	ok	0.24	0.1	3.18e-02	5.7	5.7	2.5	2.5	-72.8	-10.4	21.3	-0.1	-1.97e-02	-1.07e-02
1806	ok	0.24	0.1	2.31e-02	5.7	5.7	2.5	2.5	-41.2	-12.2	19.3	0.2	2.77e-02	-9.39e-03
1835	ok	0.24	7.09e-02	1.85e-02	5.7	5.7	2.5	2.5	-35.0	-0.4	-12.7	-1.2	-0.3	0.3
1864	ok	0.24	5.20e-02	1.77e-02	5.7	5.7	2.5	2.5	-36.3	0.2	-13.8	-0.6	-0.1	0.2
1895	ok	0.24	2.88e-02	1.71e-02	5.7	5.7	2.5	2.5	-38.0	0.7	-8.7	2.04e-02	6.38e-02	0.2
1958	ok	0.24	0.2	3.36e-02	5.7	5.7	2.5	2.5	-84.3	-9.5	1.8	-4.15e-03	2.04e-02	-1.87e-02
2015	ok	0.24	0.1	2.80e-02	5.7	5.7	2.5	2.5	-65.0	-9.5	17.0	-3.38e-02	-5.08e-03	-1.15e-02
2072	ok	0.24	9.27e-02	2.31e-02	5.7	5.7	2.5	2.5	-41.1	-6.1	22.3	-5.63e-02	-1.20e-02	-4.79e-03
2129	ok	0.24	6.06e-02	1.89e-02	5.7	5.7	2.5	2.5	-37.1	-3.0	-13.8	-1.4	-0.3	8.69e-02
2186	ok	0.24	4.29e-02	1.66e-02	5.7	5.7	2.5	2.5	-38.1	-3.0	-11.2	-0.7	-0.1	8.31e-02
2243	ok	0.24	3.97e-02	1.54e-02	5.7	5.7	2.5	2.5	-37.6	-3.7	-6.0	-0.2	-1.05e-03	8.63e-02
2304	ok	0.24	0.2	2.55e-02	5.7	5.7	2.5	2.5	-63.6	-0.5	4.7	-0.3	-7.89e-02	1.03e-02
2333	ok	0.24	0.1	2.37e-02	5.7	5.7	2.5	2.5	-52.2	-4.7	13.0	-0.2	-5.35e-02	-1.22e-02
2362	ok	0.24	9.17e-02	1.89e-02	5.7	5.7	2.5	2.5	-35.8	-5.7	14.3	-0.2	-2.95e-02	-7.70e-03
2391	ok	0.24	6.35e-02	1.50e-02	5.7	5.7	2.5	2.5	-27.1	-1.3	-12.7	1.2	0.2	0.3
2420	ok	0.24	4.96e-02	1.42e-02	5.7	5.7	2.5	2.5	-30.5	-2.3	-11.4	0.6	0.1	0.2
2451	ok	0.24	4.04e-02	1.45e-02	5.7	5.7	2.5	2.5	-33.2	-1.8	-9.9	-7.25e-02	-1.43e-02	0.2
2512	ok	0.24	0.2	2.38e-02	5.7	5.7	2.5	2.5	-48.0	1.3	3.8	0.3	8.02e-02	1.10e-02
2541	ok	0.24	0.1	2.21e-02	5.7	5.7	2.5	2.5	-42.6	-2.8	10.9	0.2	4.72e-02	-9.42e-03
2570	ok	0.24	9.71e-02	1.85e-02	5.7	5.7	2.5	2.5	-34.4	-4.7	13.4	-0.1	-2.57e-02	-1.87e-02
2599	ok	0.24	7.59e-02	1.49e-02	5.7	5.7	2.5	2.5	-26.1	-1.8	-13.1	-9.59e-02	-3.73e-02	0.3
2628	ok	0.24	5.06e-02	1.32e-02	5.7	5.7	2.5	2.5	-24.2	9.05e-02	-10.5	-0.6	-0.1	0.2
2659	ok	0.24	4.40e-02	1.24e-02	5.7	5.7	2.5	2.5	-22.8	0.9	-8.8	2.25e-02	7.33e-02	0.2
2722	ok	0.24	0.2	2.54e-02	5.7	5.7	2.5	2.5	-39.5	-2.6	3.3	3.4	0.7	1.77e-02
2779	ok	0.24	0.1	2.09e-02	5.7	5.7	2.5	2.5	-31.4	-2.4	6.5	2.7	0.6	0.1
2836	ok	0.24	0.1	1.80e-02	5.7	5.7	2.5	2.5	-32.4	-3.6	13.7	-8.12e-02	-1.71e-02	-3.47e-03
2893	ok	0.24	7.09e-02	1.46e-02	5.7	5.7	2.5	2.5	-13.8	-1.0	-12.3	1.4	0.3	9.10e-02
2950	ok	0.24	5.05e-02	1.23e-02	5.7	5.7	2.5	2.5	-25.4	-2.0	-11.3	-0.7	-0.1	8.63e-02
3007	ok	0.24	4.46e-02	1.04e-02	5.7	5.7	2.5	2.5	-22.4	-2.6	-6.8	-0.1	1.57e-02	9.13e-02
3068	ok	0.24	0.2	1.72e-02	5.7	5.7	2.5	2.5	-36.2	0.2	2.4	3.1	0.5	0.2
3097	ok	0.24	0.1	1.79e-02	5.7	5.7	2.5	2.5	-33.6	-0.8	5.6	2.4	0.4	0.3
3126	ok	0.24	0.1	1.41e-02	5.7	5.7	2.5	2.5	-25.5	-1.4	8.0	-0.2	-4.05e-02	-4.26e-03
3155	ok	0.24	7.42e-02	1.01e-02	5.7	5.7	2.5	2.5	-13.9	-1.9	-10.6	1.2	0.2	0.3
3184	ok	0.24	5.26e-02	8.94e-03	5.7	5.7	2.5	2.5	-17.5	-2.4	-9.5	0.5	9.93e-02	0.3
3215	ok	0.24	3.80e-02	8.90e-03	5.7	5.7	2.5	2.5	-15.7	-5.09e-03	-6.9	2.35e-02	1.79e-02	0.3
3276	ok	0.24	0.2	1.51e-02	5.7	5.7	2.5	2.5	-30.6	-3.55e-02	-0.3	-0.2	-1.47e-02	3.96e-02
3305	ok	0.24	0.1	1.82e-02	5.7	5.7	2.5	2.5	-29.4	-0.4	-8.4	-2.5	-0.6	0.2
3334	ok	0.24	0.1	1.38e-02	5.7	5.7	2.5	2.5	-16.1	-2.1	-9.7	-1.8	-0.4	0.3
3363	ok	0.24	8.64e-02	9.02e-03	5.7	5.7	2.5	2.5	-15.9	-4.2	0.2	-0.1	-2.86e-02	3.78e-02
3392	ok	0.24	4.85e-02	7.76e-03	5.7	5.7	2.5	2.5	-15.6	-0.3	-8.2	-5.12e-02	3.28e-02	0.3
3423	ok	0.24	4.50e-02	7.15e-03	5.7	5.7	2.5	2.5	-14.8	0.5	-6.3	1.69e-02	9.57e-02	0.3
3492	ok	0.24	0.2	1.21e-02	5.7	5.7	2.5	2.5	-24.3	-2.8	-2.5	-0.7	-9.02e-02	-3.70e-02
3549	ok	0.24	0.1	2.10e-02	5.7	5.7	2.5	2.5	-35.4	-1.9	-13.5	2.5	0.4	-7.24e-02

3606	ok	0.24	0.1	1.27e-02	5.7	5.7	2.5	2.5	-14.9	-3.7	-10.2	-2.0	-0.5	7.71e-02
3663	ok	0.24	8.25e-02	8.24e-03	5.7	5.7	2.5	2.5	-7.2	-1.6	3.2	1.0	0.2	0.1
3720	ok	0.24	4.20e-02	7.59e-03	5.7	5.7	2.5	2.5	-14.3	-1.6	-7.5	-0.7	-0.1	8.84e-02
3777	ok	0.24	3.28e-02	4.92e-03	5.7	5.7	2.5	2.5	-9.1	-0.1	-1.4	-8.55e-02	5.97e-02	8.85e-02
3868	ok	0.24	0.1	1.81e-02	5.7	5.7	2.5	2.5	10.5	0.5	3.4	0.1	1.06e-02	-4.24e-02
3897	ok	0.24	0.2	3.10e-02	5.7	5.7	2.5	2.5	-63.5	7.8	-21.9	-1.2	-0.6	0.2
3926	ok	0.24	0.2	2.41e-02	5.7	5.7	2.5	2.5	14.6	-18.6	-28.3	-1.4	-0.6	0.2
3955	ok	0.24	0.1	4.99e-03	5.7	5.7	2.5	2.5	-4.3	-1.7	5.3	-0.4	-3.50e-02	0.2
3984	ok	0.24	5.10e-02	3.88e-03	5.7	5.7	2.5	2.5	-3.1	-0.3	6.4	0.3	9.47e-02	0.2
4015	ok	0.24	2.79e-02	3.60e-03	5.7	5.7	2.5	2.5	-8.0	0.7	-2.0	-0.1	7.52e-03	0.2
4379	ok	0.24	0.3	0.0	5.7	5.7	2.5	2.5	43.3	34.0	-23.4	9.97e-02	0.1	-5.64e-02
4408	ok	0.24	0.4	0.1	5.7	5.7	2.5	2.5	-221.1	-76.8	-35.2	-1.9	-0.5	0.2
4437	ok	0.24	0.4	1.50e-02	5.7	5.7	2.5	2.5	60.5	-7.0	-4.4	-1.7	-0.6	0.2
4466	ok	0.24	0.1	4.44e-03	5.7	5.7	2.5	2.5	-6.5	1.6	4.3	-2.7	-0.4	8.08e-02
4495	ok	0.24	4.33e-02	4.00e-03	5.7	5.7	2.5	2.5	-5.4	0.3	1.5	-0.8	-7.37e-02	9.74e-02
4526	ok	0.24	3.43e-02	3.07e-03	5.7	5.7	2.5	2.5	-4.4	-2.1	3.8	0.5	9.33e-02	0.2
4702	ok	0.24	0.4	0.1	5.7	5.7	2.5	2.5	-227.6	-47.1	-55.7	-2.3	-0.4	-0.1
4761	ok	0.24	0.5	1.78e-02	5.7	5.7	2.5	2.5	35.5	16.6	-3.9	-0.7	-0.1	-7.59e-02
4820	ok	0.24	0.2	7.60e-03	5.7	5.7	2.5	2.5	-7.6	0.3	-6.6	1.3	0.2	0.1
4879	ok	0.24	5.05e-02	5.10e-03	5.7	5.7	2.5	2.5	-4.6	0.6	-6.2	0.3	0.2	6.81e-02
4938	ok	0.24	2.41e-02	2.68e-03	5.7	5.7	2.5	2.5	-3.5	-0.8	4.2	0.4	-4.94e-02	7.57e-03

Nodo	**x/d**	**V N/M**	**ver. rid**	**Af pr-**	**Af pr+**	**Af sec-**	**Af sec+**	**N z**	**N o**	**N zo**	**M z**	**M o**	**M zo**
								-530.65	-94.00	-55.75	-2.66	-0.63	-0.11
	0.24	0.86	0.23	5.65	5.65	2.51	2.51	60.54	33.96	126.58	3.52	0.79	0.36

Nodo	**Stato**	**Max tau** daN/cm2	**Ver V pr**	**Ver V sec**	**Af V pr**	**Af V sec**	**V pr** kN/ m	**V sec** kN/ m
360	ok	1.62						
419	ok	1.38						
478	ok	0.89						
537	ok	0.60						
596	ok	0.39						
655	ok	0.77						
776	ok	1.84						
805	ok	1.33						
834	ok	1.02						
863	ok	0.63						
892	ok	0.48						
923	ok	0.65						
984	ok	1.85						
1013	ok	1.22						
1042	ok	1.01						
1071	ok	0.60						
1100	ok	0.38						
1131	ok	0.47						
1194	ok	1.67						
1251	ok	1.26						
1308	ok	0.89						
1365	ok	0.60						
1422	ok	0.33						
1479	ok	0.49						
1540	ok	1.81						
1569	ok	1.27						
1598	ok	1.00						
1627	ok	0.63						
1656	ok	0.38						
1687	ok	0.41						
1748	ok	1.81						
1777	ok	1.27						
1806	ok	1.00						
1835	ok	0.61						
1864	ok	0.41						
1895	ok	0.42						
1958	ok	1.68						
2015	ok	1.27						
2072	ok	0.89						
2129	ok	0.60						
2186	ok	0.34						
2243	ok	0.46						
2304	ok	1.83						
2333	ok	1.28						
2362	ok	1.01						
2391	ok	0.63						
2420	ok	0.38						
2451	ok	0.42						
2512	ok	1.83						

2541	ok	1.27						
2570	ok	1.01						
2599	ok	0.61						
2628	ok	0.40						
2659	ok	0.41						
2722	ok	1.79						
2779	ok	1.31						
2836	ok	0.92						
2893	ok	0.62						
2950	ok	0.34						
3007	ok	0.45						
3068	ok	1.93						
3097	ok	1.32						
3126	ok	1.02						
3155	ok	0.65						
3184	ok	0.37						
3215	ok	0.42						
3276	ok	1.93						
3305	ok	1.29						
3334	ok	1.03						
3363	ok	0.64						
3392	ok	0.44						
3423	ok	0.41						
3492	ok	1.88						
3549	ok	2.04						
3606	ok	1.73						
3663	ok	0.74						
3720	ok	0.37						
3777	ok	0.45						
3868	ok	0.82						
3897	ok	2.59						
3926	ok	1.72						
3955	ok	0.76						
3984	ok	0.35						
4015	ok	0.45						
4379	ok	1.06						
4408	ok Av	6.78	0.31	0.04	7.6	0.9	74.0	8.8
4437	ok	1.71						
4466	ok	0.98						
4495	ok	0.38						
4526	ok	0.60						
4702	ok Av	7.06	0.31	0.09	7.7	2.2	74.6	21.7
4761	ok	1.19						
4820	ok	0.93						
4879	ok	0.32						
4938	ok	0.63						
Nodo		**Max tau**	**Ver V pr**	**Ver V sec**	**Af V pr**	**Af V sec**	**V pr**	**V sec**
		7.06	0.31	0.09	7.70	2.24	74.59	21.73

Macro Setto	Spessore	Id Materiale	Id Criterio	Progettazione
	cm			
10	15.00	1	1	Singolo elemento NON DISSIPATIVO

Nodo	Stato	x/d	V N/M	ver. rid	Af pr-	Af pr+	Af sec-	Af sec+	N z	N o	N zo	M z	M o	M zo
									kN/ m	kN/ m	kN/ m	kN	kN	kN
362	ok	0.24	0.6	0.2	5.7	5.7	2.5	2.5	-520.3	-91.4	127.4	0.1	-2.33e-02	-3.38e-02
421	ok	0.24	0.5	4.68e-02	5.7	5.7	2.5	2.5	-96.4	-25.1	3.6	3.7	0.8	-6.99e-02
480	ok	0.24	0.2	3.30e-02	5.7	5.7	2.5	2.5	-74.2	-20.8	-22.2	2.7	0.6	-4.77e-02
539	ok	0.24	0.2	2.44e-02	5.7	5.7	2.5	2.5	-57.2	-10.8	13.7	1.8	0.4	-7.08e-02
598	ok	0.24	0.1	2.22e-02	5.7	5.7	2.5	2.5	-43.0	-9.1	-4.6	0.9	0.2	-6.69e-02
657	ok	0.24	5.31e-02	3.02e-02	5.7	5.7	2.5	2.5	-55.9	-14.8	-20.0	0.2	-5.13e-02	-4.49e-02
777	ok	0.24	0.8	0.2	5.7	5.7	2.5	2.5	-449.0	-62.0	82.7	-0.2	-7.86e-02	-1.18e-03
806	ok	0.24	0.5	5.25e-02	5.7	5.7	2.5	2.5	-91.4	12.0	-2.9	3.4	0.7	0.2
835	ok	0.24	0.2	3.10e-02	5.7	5.7	2.5	2.5	-71.6	20.9	-8.5	2.5	0.5	0.2
864	ok	0.24	0.1	2.32e-02	5.7	5.7	2.5	2.5	-58.2	-8.7	1.5	1.6	0.3	0.2
893	ok	0.24	5.17e-02	2.04e-02	5.7	5.7	2.5	2.5	-41.2	-5.2	6.2	0.8	0.2	0.2
925	ok	0.24	6.29e-02	2.50e-02	5.7	5.7	2.5	2.5	-54.5	-13.8	-12.2	-6.10e-02	-0.2	0.2
985	ok	0.24	0.4	0.1	5.7	5.7	2.5	2.5	-261.6	-32.4	48.1	-0.2	-3.05e-02	-1.96e-02
1014	ok	0.24	0.2	4.72e-02	5.7	5.7	2.5	2.5	-88.8	-42.1	44.5	0.2	4.54e-02	-8.85e-03
1043	ok	0.24	0.2	3.22e-02	5.7	5.7	2.5	2.5	-49.5	8.3	-8.7	-1.8	-0.3	0.3
1072	ok	0.24	0.1	2.31e-02	5.7	5.7	2.5	2.5	-52.6	-3.9	-6.2	-1.2	-0.2	0.3
1101	ok	0.24	5.66e-02	2.11e-02	5.7	5.7	2.5	2.5	-47.3	-0.7	-9.3	-0.5	-0.1	0.3

1133	ok	0.24	5.37e-02	2.03e-02	5.7	5.7	2.5	2.5	-50.2	0.3	-5.9	-7.67e-03	1.03e-03	0.3
1196	ok	0.24	0.3	6.81e-02	5.7	5.7	2.5	2.5	-166.8	-23.5	24.0	-8.40e-02	1.09e-02	-1.85e-02
1253	ok	0.24	0.2	4.27e-02	5.7	5.7	2.5	2.5	-86.8	-22.3	39.6	-9.24e-02	-1.57e-02	-1.07e-02
1310	ok	0.24	0.1	2.68e-02	5.7	5.7	2.5	2.5	-57.0	-0.3	-9.1	-2.0	-0.4	8.77e-02
1367	ok	0.24	6.16e-02	2.28e-02	5.7	5.7	2.5	2.5	-41.5	-0.6	-11.0	1.4	0.3	9.11e-02
1424	ok	0.24	4.21e-02	2.08e-02	5.7	5.7	2.5	2.5	-41.2	-3.4	-11.6	0.7	0.2	8.71e-02
1481	ok	0.24	3.13e-02	1.95e-02	5.7	5.7	2.5	2.5	-47.8	-1.5	-7.1	0.1	1.10e-02	9.09e-02
1541	ok	0.24	0.2	4.62e-02	5.7	5.7	2.5	2.5	-114.6	-4.8	12.2	-0.3	-8.22e-02	3.30e-03
1570	ok	0.24	0.1	3.44e-02	5.7	5.7	2.5	2.5	-76.7	-14.4	25.3	-0.2	-4.93e-02	-1.49e-02
1599	ok	0.24	9.50e-02	2.27e-02	5.7	5.7	2.5	2.5	-38.5	-15.7	18.3	8.89e-02	2.11e-02	-2.06e-02
1628	ok	0.24	6.30e-02	1.91e-02	5.7	5.7	2.5	2.5	-43.9	-1.0	-8.6	1.2	0.3	0.3
1657	ok	0.24	3.75e-02	1.81e-02	5.7	5.7	2.5	2.5	-42.1	0.3	-10.3	0.6	0.1	0.2
1689	ok	0.24	2.33e-02	1.84e-02	5.7	5.7	2.5	2.5	-45.0	1.05e-02	-7.2	-2.39e-02	-3.12e-02	0.2
1749	ok	0.24	0.2	3.79e-02	5.7	5.7	2.5	2.5	-94.3	-4.1	8.6	-0.2	-2.46e-02	-2.68e-02
1778	ok	0.24	0.1	3.11e-02	5.7	5.7	2.5	2.5	-71.3	-10.3	20.6	-0.1	-1.69e-02	-1.22e-02
1807	ok	0.24	9.93e-02	2.29e-02	5.7	5.7	2.5	2.5	-40.2	-12.0	18.5	0.2	2.78e-02	-1.01e-02
1836	ok	0.24	6.98e-02	1.83e-02	5.7	5.7	2.5	2.5	-35.3	-0.4	-12.2	-1.2	-0.3	0.3
1865	ok	0.24	5.07e-02	1.75e-02	5.7	5.7	2.5	2.5	-36.3	0.4	-13.3	-0.6	-0.1	0.2
1897	ok	0.24	2.89e-02	1.66e-02	5.7	5.7	2.5	2.5	-37.2	0.7	-8.0	9.57e-03	5.10e-02	0.2
1960	ok	0.24	0.2	3.31e-02	5.7	5.7	2.5	2.5	-83.2	-9.4	1.9	5.41e-03	2.29e-02	-1.80e-02
2017	ok	0.24	0.1	2.73e-02	5.7	5.7	2.5	2.5	-63.7	-9.4	16.3	-2.44e-02	-1.90e-03	-1.22e-02
2074	ok	0.24	9.37e-02	2.28e-02	5.7	5.7	2.5	2.5	-40.2	-6.0	21.7	-4.78e-02	-9.44e-03	-5.67e-03
2131	ok	0.24	6.17e-02	1.87e-02	5.7	5.7	2.5	2.5	-37.3	-2.9	-13.3	-1.4	-0.3	8.64e-02
2188	ok	0.24	4.41e-02	1.64e-02	5.7	5.7	2.5	2.5	-37.9	-2.9	-10.6	-0.7	-0.1	8.31e-02
2245	ok	0.24	3.85e-02	1.49e-02	5.7	5.7	2.5	2.5	-34.2	-2.9	-8.7	0.1	2.56e-02	8.83e-02
2305	ok	0.24	0.2	2.50e-02	5.7	5.7	2.5	2.5	-62.4	-0.5	4.5	-0.3	-8.24e-02	4.26e-03
2334	ok	0.24	0.1	2.35e-02	5.7	5.7	2.5	2.5	-51.1	-4.7	12.8	-0.2	-5.11e-02	-1.39e-02
2363	ok	0.24	9.42e-02	1.87e-02	5.7	5.7	2.5	2.5	-34.9	-5.6	14.0	-0.2	-2.92e-02	-9.55e-03
2392	ok	0.24	6.53e-02	1.48e-02	5.7	5.7	2.5	2.5	-27.3	-1.3	-12.0	1.2	0.2	0.3
2421	ok	0.24	5.08e-02	1.38e-02	5.7	5.7	2.5	2.5	-30.1	-2.1	-10.7	0.6	0.1	0.2
2453	ok	0.24	4.22e-02	1.40e-02	5.7	5.7	2.5	2.5	-32.3	-1.7	-9.2	-7.85e-02	-1.80e-02	0.2
2513	ok	0.24	0.2	2.37e-02	5.7	5.7	2.5	2.5	-48.3	1.2	2.9	-3.0	-0.5	0.2
2542	ok	0.24	0.1	2.19e-02	5.7	5.7	2.5	2.5	-42.7	-1.5	4.2	-2.4	-0.4	0.3
2571	ok	0.24	9.90e-02	1.82e-02	5.7	5.7	2.5	2.5	-33.5	-4.6	13.1	-0.1	-2.30e-02	-1.99e-02
2600	ok	0.24	7.31e-02	1.46e-02	5.7	5.7	2.5	2.5	-24.4	-1.4	-12.1	-1.2	-0.3	0.3
2629	ok	0.24	4.86e-02	1.29e-02	5.7	5.7	2.5	2.5	-24.1	-1.3	-11.9	-0.6	-0.1	0.2
2661	ok	0.24	4.46e-02	1.19e-02	5.7	5.7	2.5	2.5	-23.0	0.6	-8.2	1.65e-02	6.73e-02	0.2
2724	ok	0.24	0.2	2.52e-02	5.7	5.7	2.5	2.5	-38.7	-2.5	3.2	3.5	0.7	1.90e-02
2781	ok	0.24	0.1	2.06e-02	5.7	5.7	2.5	2.5	-30.7	-2.4	6.5	2.8	0.6	0.1
2838	ok	0.24	0.1	1.78e-02	5.7	5.7	2.5	2.5	-31.6	-3.5	13.7	-6.33e-02	-1.28e-02	-3.41e-03
2895	ok	0.24	7.23e-02	1.44e-02	5.7	5.7	2.5	2.5	-13.6	-1.0	-11.6	1.4	0.3	9.22e-02
2952	ok	0.24	5.11e-02	1.20e-02	5.7	5.7	2.5	2.5	-25.0	-3.1	-9.6	-0.7	-0.1	8.69e-02
3009	ok	0.24	4.48e-02	9.82e-03	5.7	5.7	2.5	2.5	-22.7	-2.6	-6.3	-0.1	1.57e-02	9.28e-02
3069	ok	0.24	0.2	1.69e-02	5.7	5.7	2.5	2.5	-35.3	0.3	2.2	3.1	0.5	0.2
3098	ok	0.24	0.1	1.75e-02	5.7	5.7	2.5	2.5	-32.3	-1.0	7.4	2.5	0.6	0.3
3127	ok	0.24	0.1	1.38e-02	5.7	5.7	2.5	2.5	-24.6	-1.4	8.3	-0.2	-3.87e-02	-5.51e-03
3156	ok	0.24	7.63e-02	9.82e-03	5.7	5.7	2.5	2.5	-13.7	-1.9	-9.9	1.2	0.2	0.3
3185	ok	0.24	5.36e-02	8.66e-03	5.7	5.7	2.5	2.5	-17.4	-1.5	-8.4	0.6	0.1	0.3
3217	ok	0.24	3.71e-02	8.31e-03	5.7	5.7	2.5	2.5	-18.5	0.2	-6.8	-7.42e-02	1.14e-03	0.3
3277	ok	0.24	0.2	1.47e-02	5.7	5.7	2.5	2.5	-29.8	-3.90e-02	-0.3	-0.2	-1.22e-02	3.66e-02
3306	ok	0.24	0.1	1.75e-02	5.7	5.7	2.5	2.5	-28.7	-0.6	-8.2	-2.6	-0.6	0.2
3335	ok	0.24	0.1	1.33e-02	5.7	5.7	2.5	2.5	-15.8	-2.0	-9.1	-1.8	-0.4	0.3
3364	ok	0.24	8.69e-02	8.85e-03	5.7	5.7	2.5	2.5	-15.8	-3.9	0.9	-0.1	-2.55e-02	3.43e-02
3393	ok	0.24	4.93e-02	7.57e-03	5.7	5.7	2.5	2.5	-13.0	0.4	-6.3	-0.6	-8.12e-02	0.2
3425	ok	0.24	4.36e-02	6.64e-03	5.7	5.7	2.5	2.5	-14.5	0.4	-5.8	1.90e-02	9.46e-02	0.3
3494	ok	0.24	0.2	1.19e-02	5.7	5.7	2.5	2.5	-23.8	-2.7	-2.7	-0.6	-7.55e-02	-2.79e-02
3551	ok	0.24	0.1	1.99e-02	5.7	5.7	2.5	2.5	-32.8	-1.9	-11.0	-2.8	-0.7	2.63e-02
3608	ok	0.24	0.1	1.21e-02	5.7	5.7	2.5	2.5	-14.7	-3.4	-9.3	-2.0	-0.5	7.98e-02
3665	ok	0.24	8.43e-02	8.25e-03	5.7	5.7	2.5	2.5	-7.1	-1.6	3.4	1.0	0.2	0.1
3722	ok	0.24	4.21e-02	7.60e-03	5.7	5.7	2.5	2.5	-14.3	-1.5	-6.9	-0.7	-0.1	8.93e-02
3779	ok	0.24	3.57e-02	4.80e-03	5.7	5.7	2.5	2.5	-10.9	-1.2	-3.3	-0.1	6.57e-02	9.71e-02
3869	ok	0.24	0.1	1.67e-02	5.7	5.7	2.5	2.5	10.3	-29.7	1.4	8.88e-02	-4.58e-04	-3.09e-02
3898	ok	0.24	0.2	2.84e-02	5.7	5.7	2.5	2.5	-62.6	6.1	-21.1	-1.2	-0.6	0.2
3927	ok	0.24	0.2	2.16e-02	5.7	5.7	2.5	2.5	15.9	-16.4	-26.4	-1.4	-0.6	0.2
3956	ok	0.24	0.1	4.97e-03	5.7	5.7	2.5	2.5	-7.1	-2.4	5.8	0.9	0.2	0.2
3985	ok	0.24	5.17e-02	3.90e-03	5.7	5.7	2.5	2.5	-3.1	-0.3	6.4	0.3	9.70e-02	0.2
4017	ok	0.24	2.77e-02	3.44e-03	5.7	5.7	2.5	2.5	-8.0	0.7	-1.7	-0.1	8.96e-04	0.2
4380	ok	0.24	0.3	0.0	5.7	5.7	2.5	2.5	39.5	31.5	-21.6	2.88e-02	8.37e-02	-2.91e-02
4409	ok	0.24	0.4	9.91e-02	5.7	5.7	2.5	2.5	-213.6	-74.0	-31.3	-8.3	-2.0	0.5
4438	ok	0.24	0.4	1.55e-02	5.7	5.7	2.5	2.5	36.4	5.9	14.8	-2.8	-0.5	-0.2
4467	ok	0.24	0.1	5.00e-03	5.7	5.7	2.5	2.5	-8.8	2.4	1.6	-1.7	-0.3	4.92e-02
4496	ok	0.24	4.43e-02	4.03e-03	5.7	5.7	2.5	2.5	-4.8	1.3	-0.9	-0.5	-5.28e-02	6.41e-02
4528	ok	0.24	3.41e-02	3.02e-03	5.7	5.7	2.5	2.5	-4.5	-2.3	3.6	0.5	8.90e-02	0.3
4704	ok	0.24	0.4	0.1	5.7	5.7	2.5	2.5	-218.9	-42.8	-50.1	-8.5	-1.8	-0.2
4763	ok	0.24	0.5	1.86e-02	5.7	5.7	2.5	2.5	130.2	24.2	13.2	-2.7	-0.7	-0.4
4822	ok	0.24	0.2	7.70e-03	5.7	5.7	2.5	2.5	-7.0	1.9	14.3	-1.9	-0.4	-0.1
4881	ok	0.24	5.11e-02	5.18e-03	5.7	5.7	2.5	2.5	-4.7	0.8	-5.7	0.3	0.2	7.10e-02
4940	ok	0.24	2.65e-02	2.66e-03	5.7	5.7	2.5	2.5	-3.7	-0.9	3.9	0.4	-5.62e-02	9.53e-03

Nodo	x/d	V N/M	ver. rid	Af pr-	Af pr+	Af sec-	Af sec+	N z	N o	N zo	M z	M o	M zo
								-520.29	-91.43	-50.10	-8.46	-2.01	-0.38
	0.24	0.83	0.22	5.65	5.65	2.51	2.51	130.19	31.49	127.37	3.67	0.82	0.47

Nodo	Stato	Max tau	Ver V pr	Ver V sec	Af V pr	Af V sec	V pr	V sec
		daN/cm2					kN/ m	kN/ m
362	ok	1.71						
421	ok	1.41						
480	ok	0.91						
539	ok	0.62						
598	ok	0.41						
657	ok	0.78						
777	ok	1.91						
806	ok	1.37						
835	ok	1.05						
864	ok	0.65						
893	ok	0.50						
925	ok	0.67						
985	ok	1.91						
1014	ok	1.26						
1043	ok	1.04						
1072	ok	0.62						
1101	ok	0.39						
1133	ok	0.45						
1196	ok	1.71						
1253	ok	1.29						
1310	ok	0.91						
1367	ok	0.61						
1424	ok	0.34						
1481	ok	0.48						
1541	ok	1.84						
1570	ok	1.29						
1599	ok	1.02						
1628	ok	0.64						
1657	ok	0.39						
1689	ok	0.41						
1749	ok	1.84						
1778	ok	1.29						
1807	ok	1.02						
1836	ok	0.62						
1865	ok	0.41						
1897	ok	0.43						
1960	ok	1.70						
2017	ok	1.29						
2074	ok	0.91						
2131	ok	0.61						
2188	ok	0.34						
2245	ok	0.45						
2305	ok	1.85						
2334	ok	1.30						
2363	ok	1.02						
2392	ok	0.64						
2421	ok	0.38						
2453	ok	0.42						
2513	ok	1.85						
2542	ok	1.29						
2571	ok	1.02						
2600	ok	0.62						
2629	ok	0.41						
2661	ok	0.42						
2724	ok	1.80						
2781	ok	1.32						
2838	ok	0.93						
2895	ok	0.63						
2952	ok	0.34						
3009	ok	0.44						
3069	ok	1.94						
3098	ok	1.33						
3127	ok	1.03						
3156	ok	0.66						
3185	ok	0.37						
3217	ok	0.42						
3277	ok	1.94						
3306	ok	1.30						
3335	ok	1.04						
3364	ok	0.65						
3393	ok	0.45						

3425	ok	0.41						
3494	ok	1.90						
3551	ok	2.04						
3608	ok	1.74						
3665	ok	0.76						
3722	ok	0.38						
3779	ok	0.45						
3869	ok	0.82						
3898	ok	2.58						
3927	ok	1.74						
3956	ok	0.78						
3985	ok	0.36						
4017	ok	0.45						
4380	ok	1.05						
4409	ok Av	6.69	0.30	0.04	7.6	0.9	73.1	8.5
4438	ok	1.75						
4467	ok	1.00						
4496	ok	0.39						
4528	ok	0.63						
4704	ok Av	6.99	0.30	0.09	7.6	2.4	73.5	22.8
4763	ok	1.22						
4822	ok	0.94						
4881	ok	0.32						
4940	ok	0.66						
Nodo		**Max tau**	**Ver V pr**	**Ver V sec**	**Af V pr**	**Af V sec**	**V pr**	**V sec**
		6.99	0.30	0.09	7.59	2.35	73.49	22.78

Macro Setto	Spessore	Id Materiale	Id Criterio	Progettazione
	cm			
11	15.00	1	1	Singolo elemento NON DISSIPATIVO

Nodo	Stato	x/d	V N/M	ver. rid	Af pr-	Af pr+	Af sec-	Af sec+	N z	N o	N zo	M z	M o	M zo
									kN/ m	kN/ m	kN/ m	kN	kN	kN
364	ok	0.24	0.6	0.2	5.7	5.7	2.5	2.5	-492.1	-86.4	120.2	0.2	-2.34e-02	-4.57e-02
423	ok	0.24	0.5	4.71e-02	5.7	5.7	2.5	2.5	-94.0	-24.6	2.7	3.7	0.8	-7.27e-02
482	ok	0.24	0.2	3.29e-02	5.7	5.7	2.5	2.5	-73.6	-20.7	-22.4	2.8	0.6	-4.77e-02
541	ok	0.24	0.2	2.42e-02	5.7	5.7	2.5	2.5	-56.8	-10.4	13.4	1.8	0.4	-7.34e-02
600	ok	0.24	0.1	2.26e-02	5.7	5.7	2.5	2.5	-43.1	-9.3	-5.0	0.9	0.2	-6.94e-02
659	ok	0.24	5.31e-02	3.05e-02	5.7	5.7	2.5	2.5	-55.7	-14.9	-20.2	0.2	-4.64e-02	-4.43e-02
778	ok	0.24	0.8	0.2	5.7	5.7	2.5	2.5	-429.4	-60.8	79.6	-0.3	-8.18e-02	-2.27e-03
807	ok	0.24	0.5	5.17e-02	5.7	5.7	2.5	2.5	-89.2	12.8	-4.4	3.4	0.7	0.2
836	ok	0.24	0.2	3.05e-02	5.7	5.7	2.5	2.5	-70.5	21.1	-9.0	2.6	0.6	0.2
865	ok	0.24	0.1	2.30e-02	5.7	5.7	2.5	2.5	-57.8	-8.4	0.9	1.7	0.3	0.2
894	ok	0.24	5.10e-02	2.06e-02	5.7	5.7	2.5	2.5	-41.3	-5.1	5.9	0.8	0.2	0.2
927	ok	0.24	6.39e-02	2.51e-02	5.7	5.7	2.5	2.5	-54.3	-13.7	-12.2	-4.24e-02	-0.2	0.2
986	ok	0.24	0.4	0.1	5.7	5.7	2.5	2.5	-250.2	-31.6	46.4	-0.2	-3.12e-02	-1.96e-02
1015	ok	0.24	0.2	4.45e-02	5.7	5.7	2.5	2.5	-84.4	-40.3	41.5	0.2	5.12e-02	-6.32e-03
1044	ok	0.24	0.2	3.18e-02	5.7	5.7	2.5	2.5	-48.7	8.6	-9.6	-1.8	-0.3	0.3
1073	ok	0.24	0.1	2.28e-02	5.7	5.7	2.5	2.5	-52.2	-3.6	-7.0	-1.2	-0.3	0.3
1102	ok	0.24	5.85e-02	2.13e-02	5.7	5.7	2.5	2.5	-47.1	-0.7	-9.7	-0.5	-0.1	0.3
1135	ok	0.24	5.54e-02	2.02e-02	5.7	5.7	2.5	2.5	-50.0	0.4	-6.0	-8.21e-03	4.04e-03	0.3
1198	ok	0.24	0.3	6.54e-02	5.7	5.7	2.5	2.5	-160.1	-22.9	22.9	-3.50e-02	2.10e-02	-1.12e-02
1255	ok	0.24	0.2	4.04e-02	5.7	5.7	2.5	2.5	-82.6	-21.4	36.8	-5.14e-02	-7.98e-03	-6.00e-03
1312	ok	0.24	0.1	2.65e-02	5.7	5.7	2.5	2.5	-55.6	-6.05e-02	-10.1	-2.1	-0.4	8.65e-02
1369	ok	0.24	6.35e-02	2.26e-02	5.7	5.7	2.5	2.5	-40.9	-0.4	-11.4	1.4	0.3	9.01e-02
1426	ok	0.24	4.46e-02	2.09e-02	5.7	5.7	2.5	2.5	-40.8	-3.2	-11.8	0.7	0.2	8.50e-02
1483	ok	0.24	3.05e-02	1.94e-02	5.7	5.7	2.5	2.5	-47.6	-1.4	-7.1	0.1	9.41e-03	9.19e-02
1542	ok	0.24	0.2	4.44e-02	5.7	5.7	2.5	2.5	-110.0	-4.8	11.9	-0.4	-9.10e-02	2.39e-03
1571	ok	0.24	0.1	3.29e-02	5.7	5.7	2.5	2.5	-73.2	-14.0	24.1	-0.3	-5.89e-02	-1.69e-02
1600	ok	0.24	9.60e-02	2.16e-02	5.7	5.7	2.5	2.5	-36.7	-15.1	17.2	8.62e-02	2.13e-02	-2.34e-02
1629	ok	0.24	6.31e-02	1.88e-02	5.7	5.7	2.5	2.5	-43.0	-0.8	-8.9	1.2	0.3	0.3
1658	ok	0.24	3.86e-02	1.79e-02	5.7	5.7	2.5	2.5	-41.7	0.4	-10.5	0.6	0.1	0.3
1691	ok	0.24	2.32e-02	1.83e-02	5.7	5.7	2.5	2.5	-44.8	0.1	-7.2	-1.87e-02	-3.00e-02	0.2
1750	ok	0.24	0.2	3.64e-02	5.7	5.7	2.5	2.5	-76.7	-0.2	7.3	0.3	9.00e-02	3.48e-03
1779	ok	0.24	0.1	2.97e-02	5.7	5.7	2.5	2.5	-68.0	-10.1	19.6	-0.1	-1.57e-02	-1.47e-02
1808	ok	0.24	0.1	2.18e-02	5.7	5.7	2.5	2.5	-38.3	-11.6	17.5	0.2	3.39e-02	-1.20e-02
1837	ok	0.24	7.27e-02	1.79e-02	5.7	5.7	2.5	2.5	-34.6	-0.2	-12.6	-1.2	-0.3	0.3
1866	ok	0.24	5.26e-02	1.73e-02	5.7	5.7	2.5	2.5	-35.8	0.5	-13.4	-0.6	-0.1	0.2
1899	ok	0.24	2.89e-02	1.65e-02	5.7	5.7	2.5	2.5	-40.1	0.4	-7.4	-2.09e-03	3.60e-02	0.3
1962	ok	0.24	0.2	3.19e-02	5.7	5.7	2.5	2.5	-80.1	-9.2	1.9	7.47e-02	3.58e-02	-1.49e-02
2019	ok	0.24	0.1	2.61e-02	5.7	5.7	2.5	2.5	-60.8	-9.0	15.5	2.75e-02	7.97e-03	-1.14e-02
2076	ok	0.24	9.49e-02	2.17e-02	5.7	5.7	2.5	2.5	-38.2	-5.7	20.8	-1.05e-02	-1.97e-03	-4.75e-03

2133	ok	0.24	6.44e-02	1.82e-02	5.7	5.7	2.5	2.5	-25.2	-0.6	-13.7	1.4	0.3	8.46e-02
2190	ok	0.24	4.56e-02	1.62e-02	5.7	5.7	2.5	2.5	-27.8	-1.7	-12.5	0.7	0.1	8.23e-02
2247	ok	0.24	3.79e-02	1.47e-02	5.7	5.7	2.5	2.5	-33.8	-2.9	-8.5	0.1	2.36e-02	8.88e-02
2306	ok	0.24	0.2	2.40e-02	5.7	5.7	2.5	2.5	-59.8	-0.5	4.5	-0.4	-9.06e-02	3.32e-03
2335	ok	0.24	0.1	2.20e-02	5.7	5.7	2.5	2.5	-48.5	-4.6	12.6	-0.3	-6.15e-02	-1.63e-02
2364	ok	0.24	9.84e-02	1.76e-02	5.7	5.7	2.5	2.5	-32.9	-3.3	13.9	-0.2	-4.66e-02	-1.13e-02
2393	ok	0.24	6.80e-02	1.42e-02	5.7	5.7	2.5	2.5	-26.4	-1.2	-11.8	1.3	0.3	0.3
2422	ok	0.24	5.27e-02	1.36e-02	5.7	5.7	2.5	2.5	-29.3	-1.7	-12.1	0.6	0.1	0.3
2455	ok	0.24	4.34e-02	1.38e-02	5.7	5.7	2.5	2.5	-31.9	-1.7	-9.1	-2.36e-02	-1.71e-02	0.2
2514	ok	0.24	0.2	2.22e-02	5.7	5.7	2.5	2.5	-46.0	1.2	2.9	-3.0	-0.5	0.2
2543	ok	0.24	0.1	2.04e-02	5.7	5.7	2.5	2.5	-40.6	-1.5	4.3	-2.4	-0.4	0.3
2572	ok	0.24	0.1	1.71e-02	5.7	5.7	2.5	2.5	-29.6	-2.1	12.3	0.2	4.36e-02	-8.23e-03
2601	ok	0.24	7.50e-02	1.40e-02	5.7	5.7	2.5	2.5	-23.6	-1.3	-11.9	-1.2	-0.3	0.3
2630	ok	0.24	4.95e-02	1.27e-02	5.7	5.7	2.5	2.5	-23.7	-1.1	-11.7	-0.6	-0.1	0.3
2663	ok	0.24	4.52e-02	1.18e-02	5.7	5.7	2.5	2.5	-22.7	0.7	-8.1	1.21e-02	6.80e-02	0.3
2726	ok	0.24	0.2	2.37e-02	5.7	5.7	2.5	2.5	-37.1	-2.4	2.9	3.5	0.7	2.61e-02
2783	ok	0.24	0.2	1.90e-02	5.7	5.7	2.5	2.5	-29.3	-2.3	6.7	2.8	0.6	0.1
2840	ok	0.24	0.1	1.66e-02	5.7	5.7	2.5	2.5	-22.9	-1.8	9.8	2.0	0.4	8.27e-02
2897	ok	0.24	7.61e-02	1.39e-02	5.7	5.7	2.5	2.5	-24.4	-2.6	-13.2	-1.4	-0.3	8.78e-02
2954	ok	0.24	5.22e-02	1.17e-02	5.7	5.7	2.5	2.5	-24.6	-3.1	-9.5	-0.7	-0.1	8.27e-02
3011	ok	0.24	4.48e-02	9.63e-03	5.7	5.7	2.5	2.5	-22.2	-2.6	-6.2	-0.1	1.78e-02	9.27e-02
3070	ok	0.24	0.2	1.53e-02	5.7	5.7	2.5	2.5	-33.6	0.4	2.0	3.1	0.5	0.2
3099	ok	0.24	0.2	1.54e-02	5.7	5.7	2.5	2.5	-30.3	-0.5	7.3	2.5	0.6	0.3
3128	ok	0.24	0.1	1.23e-02	5.7	5.7	2.5	2.5	-23.4	-1.3	8.1	1.9	0.4	0.3
3157	ok	0.24	8.00e-02	9.36e-03	5.7	5.7	2.5	2.5	-13.2	-1.6	-8.8	1.3	0.3	0.3
3186	ok	0.24	5.57e-02	8.41e-03	5.7	5.7	2.5	2.5	-17.2	-1.2	-7.9	0.6	0.1	0.3
3219	ok	0.24	3.70e-02	8.14e-03	5.7	5.7	2.5	2.5	-18.3	0.3	-6.5	-7.43e-02	1.71e-03	0.3
3278	ok	0.24	0.2	1.34e-02	5.7	5.7	2.5	2.5	-24.1	-0.5	-3.5	-3.8	-0.6	0.1
3307	ok	0.24	0.2	1.47e-02	5.7	5.7	2.5	2.5	-24.0	-1.7	-7.5	-2.7	-0.6	0.2
3336	ok	0.24	0.1	1.17e-02	5.7	5.7	2.5	2.5	-13.0	-2.3	-7.2	-1.9	-0.4	0.3
3365	ok	0.24	8.58e-02	8.71e-03	5.7	5.7	2.5	2.5	-13.4	-2.2	7.6	0.1	2.24e-02	-1.10e-02
3394	ok	0.24	5.07e-02	7.46e-03	5.7	5.7	2.5	2.5	-13.0	0.6	-6.0	-0.6	-8.27e-02	0.3
3427	ok	0.24	4.22e-02	6.52e-03	5.7	5.7	2.5	2.5	-14.3	0.5	-5.7	1.90e-02	9.18e-02	0.3
3496	ok	0.24	0.2	1.19e-02	5.7	5.7	2.5	2.5	-23.4	-2.8	-3.7	-0.7	-9.09e-02	-4.42e-02
3553	ok	0.24	0.1	1.54e-02	5.7	5.7	2.5	2.5	-26.1	-2.6	-10.0	-3.0	-0.7	-1.43e-02
3610	ok	0.24	0.1	1.05e-02	5.7	5.7	2.5	2.5	-12.2	-3.3	-6.6	-2.1	-0.5	4.32e-02
3667	ok	0.24	8.45e-02	8.49e-03	5.7	5.7	2.5	2.5	-6.4	-1.2	3.7	1.0	0.2	0.1
3724	ok	0.24	4.11e-02	7.66e-03	5.7	5.7	2.5	2.5	-14.6	-1.9	-6.7	-0.7	-0.1	8.87e-02
3781	ok	0.24	3.59e-02	4.68e-03	5.7	5.7	2.5	2.5	-6.2	-0.9	4.0	-0.2	6.06e-02	0.1
3870	ok	0.24	0.1	1.06e-02	5.7	5.7	2.5	2.5	4.3	0.6	1.4	0.1	-5.92e-03	-3.68e-02
3899	ok	0.24	0.2	1.85e-02	5.7	5.7	2.5	2.5	-31.1	-2.0	-10.2	2.4	0.1	1.99e-02
3928	ok	0.24	0.1	1.20e-02	5.7	5.7	2.5	2.5	12.6	-10.2	-15.1	-1.4	-0.6	0.2
3957	ok	0.24	0.1	5.15e-03	5.7	5.7	2.5	2.5	-7.0	-2.0	5.8	0.9	0.2	0.2
3986	ok	0.24	5.03e-02	3.92e-03	5.7	5.7	2.5	2.5	-6.7	-0.5	3.3	0.5	0.2	0.3
4019	ok	0.24	2.74e-02	3.28e-03	5.7	5.7	2.5	2.5	-5.2	-0.5	3.3	-0.2	4.81e-02	0.3
4381	ok	0.24	0.2	0.0	5.7	5.7	2.5	2.5	23.9	20.9	-14.0	-3.04e-02	8.03e-02	-1.09e-02
4410	ok	0.24	0.5	5.92e-02	5.7	5.7	2.5	2.5	-133.2	-48.4	-17.8	-7.5	-1.9	0.6
4439	ok	0.24	0.3	1.31e-02	5.7	5.7	2.5	2.5	80.2	6.5	-6.9	-2.9	-0.9	-1.46e-02
4468	ok	0.24	0.1	6.08e-03	5.7	5.7	2.5	2.5	-10.9	1.6	0.9	-1.8	-0.3	4.37e-02
4497	ok	0.24	4.56e-02	4.03e-03	5.7	5.7	2.5	2.5	-4.6	1.2	-0.5	-0.5	-6.19e-02	5.86e-02
4530	ok	0.24	3.41e-02	3.00e-03	5.7	5.7	2.5	2.5	-4.5	-2.4	3.7	0.5	8.27e-02	0.3
4706	ok	0.24	0.5	6.28e-02	5.7	5.7	2.5	2.5	-134.3	-24.2	-29.1	-7.5	-1.6	-1.61e-02
4765	ok	0.24	0.4	1.50e-02	5.7	5.7	2.5	2.5	83.7	16.1	8.8	-3.0	-0.8	-0.3
4824	ok	0.24	0.2	7.57e-03	5.7	5.7	2.5	2.5	-10.7	1.5	12.5	-2.0	-0.4	-0.2
4883	ok	0.24	5.10e-02	5.14e-03	5.7	5.7	2.5	2.5	-6.4	-0.9	1.9	-0.6	-8.42e-02	-0.1
4942	ok	0.24	2.76e-02	2.65e-03	5.7	5.7	2.5	2.5	-3.8	-0.9	3.9	0.4	-6.45e-02	1.09e-02

Nodo	**x/d**	**V N/M**	**ver. rid**	**Af pr-**	**Af pr+**	**Af sec-**	**Af sec+**	**N z**	**N o**	**N zo**	**M z**	**M o**	**M zo**
								-492.11	-86.39	-29.05	-7.53	-1.87	-0.32
	0.24	0.83	0.21	5.65	5.65	2.51	2.51	83.73	21.11	120.19	3.73	0.83	0.55

Nodo	**Stato**	**Max tau**	**Ver V pr**	**Ver V sec**	**Af V pr**	**Af V sec**	**V pr**	**V sec**
		daN/cm2					kN/ m	kN/ m
364	ok	1.75						
423	ok	1.43						
482	ok	0.92						
541	ok	0.62						
600	ok	0.41						
659	ok	0.79						
778	ok	1.94						
807	ok	1.39						
836	ok	1.06						
865	ok	0.66						
894	ok	0.51						
927	ok	0.70						
986	ok	1.94						
1015	ok	1.29						

1044	ok	1.06						
1073	ok	0.63						
1102	ok	0.39						
1135	ok	0.46						
1198	ok	1.73						
1255	ok	1.31						
1312	ok	0.91						
1369	ok	0.62						
1426	ok	0.34						
1483	ok	0.48						
1542	ok	1.87						
1571	ok	1.32						
1600	ok	1.04						
1629	ok	0.65						
1658	ok	0.39						
1691	ok	0.41						
1750	ok	1.87						
1779	ok	1.31						
1808	ok	1.04						
1837	ok	0.63						
1866	ok	0.41						
1899	ok	0.39						
1962	ok	1.72						
2019	ok	1.31						
2076	ok	0.91						
2133	ok	0.63						
2190	ok	0.35						
2247	ok	0.44						
2306	ok	1.87						
2335	ok	1.32						
2364	ok	1.04						
2393	ok	0.65						
2422	ok	0.39						
2455	ok	0.41						
2514	ok	1.87						
2543	ok	1.31						
2572	ok	1.04						
2601	ok	0.63						
2630	ok	0.41						
2663	ok	0.42						
2726	ok	1.88						
2783	ok	1.36						
2840	ok	0.94						
2897	ok	0.64						
2954	ok	0.35						
3011	ok	0.43						
3070	ok	2.02						
3099	ok	1.38						
3128	ok	1.05						
3157	ok	0.67						
3186	ok	0.38						
3219	ok	0.42						
3278	ok	2.02						
3307	ok	1.35						
3336	ok	1.06						
3365	ok	0.65						
3394	ok	0.45						
3427	ok	0.41						
3496	ok	1.98						
3553	ok	2.07						
3610	ok	1.75						
3667	ok	0.78						
3724	ok	0.38						
3781	ok	0.45						
3870	ok	0.84						
3899	ok	2.61						
3928	ok	1.74						
3957	ok	0.79						
3986	ok	0.37						
4019	ok	0.45						
4381	ok	1.09						
4410	ok Av	6.75	0.31	0.04	7.6	1.0	73.8	9.3
4439	ok	1.77						
4468	ok	1.03						
4497	ok	0.40						
4530	ok	0.64						
4706	ok Av	7.07	0.31	0.10	7.7	2.5	74.1	24.4
4765	ok	1.30						
4824	ok	0.97						

4883	ok	0.32
4942	ok	0.67

Nodo	Max tau	Ver V pr	Ver V sec	Af V pr	Af V sec	V pr	V sec
	7.07	0.31	0.10	7.65	2.52	74.10	24.39

Macro Setto	Spessore	Id Materiale	Id Criterio	Progettazione
	cm			
12	15.00	1	1	Singolo elemento NON DISSIPATIVO

Nodo	Stato	x/d	V N/M	ver. rid	Af pr-	Af pr+	Af sec-	Af sec+	N z	N o	N zo	M z	M o	M zo
									kN/ m	kN/ m	kN/ m	kN	kN	kN
368	ok	0.24	0.6	0.2	5.7	5.7	2.5	2.5	-492.4	-86.2	120.9	-0.4	-6.99e-02	3.50e-02
427	ok	0.24	0.5	4.56e-02	5.7	5.7	2.5	2.5	-91.9	-23.9	3.2	3.6	0.8	-5.88e-02
486	ok	0.24	0.2	3.21e-02	5.7	5.7	2.5	2.5	-71.2	-20.1	-22.5	2.7	0.6	-4.67e-02
545	ok	0.24	0.2	2.37e-02	5.7	5.7	2.5	2.5	-55.6	-10.3	13.0	1.8	0.4	-6.93e-02
604	ok	0.24	0.1	2.28e-02	5.7	5.7	2.5	2.5	-42.5	-9.2	-5.4	0.9	0.2	-6.67e-02
663	ok	0.24	5.24e-02	3.08e-02	5.7	5.7	2.5	2.5	-55.1	-15.0	-18.6	0.1	-4.61e-02	-4.09e-02
780	ok	0.24	0.8	0.2	5.7	5.7	2.5	2.5	-425.4	-59.0	78.1	-0.5	-9.22e-02	-1.60e-02
809	ok	0.24	0.5	5.07e-02	5.7	5.7	2.5	2.5	-87.6	11.6	-3.7	3.4	0.7	0.2
838	ok	0.24	0.2	2.97e-02	5.7	5.7	2.5	2.5	-68.8	20.4	-8.9	2.5	0.6	0.2
867	ok	0.24	0.1	2.26e-02	5.7	5.7	2.5	2.5	-56.6	-8.4	0.5	1.7	0.3	0.2
896	ok	0.24	5.09e-02	2.08e-02	5.7	5.7	2.5	2.5	-40.7	-5.0	5.5	0.8	0.2	0.2
931	ok	0.24	6.62e-02	2.52e-02	5.7	5.7	2.5	2.5	-53.6	-13.5	-10.6	-3.20e-02	-0.1	0.2
988	ok	0.24	0.4	0.1	5.7	5.7	2.5	2.5	-248.4	-30.7	45.3	-0.2	-3.16e-02	-4.88e-02
1017	ok	0.24	0.2	4.43e-02	5.7	5.7	2.5	2.5	-84.3	-40.0	41.0	0.2	5.72e-02	-3.18e-02
1046	ok	0.24	0.2	3.12e-02	5.7	5.7	2.5	2.5	-48.1	7.9	-9.3	-1.8	-0.3	0.3
1075	ok	0.24	0.1	2.24e-02	5.7	5.7	2.5	2.5	-51.3	-3.9	-7.3	-1.2	-0.3	0.3
1104	ok	0.24	5.99e-02	2.13e-02	5.7	5.7	2.5	2.5	-46.4	-0.8	-10.0	-0.5	-0.1	0.3
1139	ok	0.24	6.22e-02	2.00e-02	5.7	5.7	2.5	2.5	-49.3	0.4	-6.3	-4.43e-03	-9.66e-03	0.3
1202	ok	0.24	0.3	6.51e-02	5.7	5.7	2.5	2.5	-159.8	-22.6	22.0	0.1	3.86e-02	-2.47e-02
1259	ok	0.24	0.2	4.02e-02	5.7	5.7	2.5	2.5	-82.7	-21.3	36.2	6.83e-02	1.45e-02	-1.76e-02
1316	ok	0.24	0.1	2.63e-02	5.7	5.7	2.5	2.5	-55.2	-0.5	-9.7	-2.0	-0.4	9.16e-02
1373	ok	0.24	6.20e-02	2.23e-02	5.7	5.7	2.5	2.5	-54.5	-3.6	-7.5	-1.3	-0.3	0.1
1430	ok	0.24	4.56e-02	2.09e-02	5.7	5.7	2.5	2.5	-48.4	-1.1	-6.7	-0.6	-0.1	0.1
1487	ok	0.24	2.85e-02	1.91e-02	5.7	5.7	2.5	2.5	-46.9	-1.3	-7.0	8.58e-02	1.28e-02	0.1
1544	ok	0.24	0.2	4.44e-02	5.7	5.7	2.5	2.5	-110.2	-4.5	11.5	-0.3	-7.40e-02	-4.43e-03
1573	ok	0.24	0.1	3.28e-02	5.7	5.7	2.5	2.5	-73.4	-13.9	23.6	-0.2	-5.58e-02	-2.15e-02
1602	ok	0.24	0.1	2.19e-02	5.7	5.7	2.5	2.5	-36.7	-15.1	16.9	4.92e-02	1.06e-02	-2.61e-02
1631	ok	0.24	6.26e-02	1.85e-02	5.7	5.7	2.5	2.5	-42.3	-1.0	-8.8	1.2	0.2	0.3
1660	ok	0.24	3.84e-02	1.77e-02	5.7	5.7	2.5	2.5	-40.9	0.3	-10.4	0.5	0.1	0.2
1695	ok	0.24	2.24e-02	1.80e-02	5.7	5.7	2.5	2.5	-41.0	2.14e-02	-8.7	5.23e-03	-9.89e-03	0.3
1752	ok	0.24	0.2	3.65e-02	5.7	5.7	2.5	2.5	-90.9	-4.0	8.0	-0.1	-2.21e-02	-3.43e-02
1781	ok	0.24	0.1	2.97e-02	5.7	5.7	2.5	2.5	-68.3	-10.0	19.1	-8.95e-02	-1.27e-02	-1.80e-02
1810	ok	0.24	1.00e-01	2.20e-02	5.7	5.7	2.5	2.5	-38.4	-11.5	17.2	0.2	2.94e-02	-1.59e-02
1839	ok	0.24	7.04e-02	1.79e-02	5.7	5.7	2.5	2.5	-34.1	-0.4	-12.3	-1.2	-0.3	0.3
1868	ok	0.24	5.13e-02	1.70e-02	5.7	5.7	2.5	2.5	-35.3	0.4	-13.2	-0.6	-0.1	0.2
1903	ok	0.24	2.92e-02	1.62e-02	5.7	5.7	2.5	2.5	-39.4	0.4	-7.3	-2.93e-03	3.10e-02	0.3
1966	ok	0.24	0.2	3.24e-02	5.7	5.7	2.5	2.5	-80.7	-9.3	1.5	0.1	3.53e-02	-1.55e-02
2023	ok	0.24	0.1	2.61e-02	5.7	5.7	2.5	2.5	-61.1	-9.1	15.0	7.47e-02	1.42e-02	-1.32e-02
2080	ok	0.24	9.43e-02	2.20e-02	5.7	5.7	2.5	2.5	-38.3	-5.8	20.4	3.32e-02	4.40e-03	-6.73e-03
2137	ok	0.24	6.60e-02	1.82e-02	5.7	5.7	2.5	2.5	-36.1	-2.8	-13.4	-1.3	-0.3	9.06e-02
2194	ok	0.24	4.72e-02	1.61e-02	5.7	5.7	2.5	2.5	-37.1	-3.8	-10.4	-0.6	-0.1	8.90e-02
2251	ok	0.24	3.67e-02	1.44e-02	5.7	5.7	2.5	2.5	-35.4	-3.4	-5.3	-9.06e-02	-6.82e-04	9.78e-02
2308	ok	0.24	0.2	2.42e-02	5.7	5.7	2.5	2.5	-60.5	-0.4	4.3	-0.3	-7.60e-02	-4.34e-03
2337	ok	0.24	0.1	2.25e-02	5.7	5.7	2.5	2.5	-49.0	-4.6	12.2	-0.2	-5.64e-02	-2.04e-02
2366	ok	0.24	0.1	1.78e-02	5.7	5.7	2.5	2.5	-33.0	-3.4	13.5	-0.2	-4.17e-02	-1.69e-02
2395	ok	0.24	7.17e-02	1.42e-02	5.7	5.7	2.5	2.5	-25.9	-1.1	-11.5	1.2	0.2	0.3
2424	ok	0.24	5.32e-02	1.33e-02	5.7	5.7	2.5	2.5	-28.6	-1.7	-11.7	0.5	0.1	0.3
2459	ok	0.24	4.35e-02	1.35e-02	5.7	5.7	2.5	2.5	-31.2	-1.6	-8.8	-1.61e-02	-1.23e-02	0.2
2516	ok	0.24	0.2	2.28e-02	5.7	5.7	2.5	2.5	-45.2	1.4	3.5	0.3	6.42e-02	-4.13e-03
2545	ok	0.24	0.1	2.08e-02	5.7	5.7	2.5	2.5	-39.7	-2.7	10.2	0.2	5.07e-02	-2.10e-02
2574	ok	0.24	0.1	1.73e-02	5.7	5.7	2.5	2.5	-29.8	-2.1	11.9	0.2	3.54e-02	-1.69e-02
2603	ok	0.24	7.68e-02	1.40e-02	5.7	5.7	2.5	2.5	-22.8	-3.6	10.0	-1.2	-0.3	0.3
2632	ok	0.24	4.80e-02	1.24e-02	5.7	5.7	2.5	2.5	-10.5	-1.8	10.2	-0.5	-0.1	0.2
2667	ok	0.24	4.61e-02	1.15e-02	5.7	5.7	2.5	2.5	-22.2	0.7	-7.9	8.80e-03	4.99e-02	0.3
2730	ok	0.24	0.2	2.44e-02	5.7	5.7	2.5	2.5	-48.2	-4.7	-7.1	-0.4	-5.78e-02	-1.10e-02
2787	ok	0.24	0.2	1.94e-02	5.7	5.7	2.5	2.5	-39.4	-4.4	8.2	6.51e-02	1.14e-02	-1.44e-02
2844	ok	0.24	0.1	1.68e-02	5.7	5.7	2.5	2.5	-29.8	-3.3	13.5	2.56e-02	1.46e-03	-7.92e-03
2901	ok	0.24	8.06e-02	1.39e-02	5.7	5.7	2.5	2.5	-24.0	-2.5	-12.8	-1.3	-0.3	9.50e-02
2958	ok	0.24	5.44e-02	1.16e-02	5.7	5.7	2.5	2.5	-24.6	-2.7	-10.2	-0.6	-0.1	9.38e-02
3015	ok	0.24	4.41e-02	9.42e-03	5.7	5.7	2.5	2.5	-21.7	-2.4	-6.1	-7.77e-02	1.08e-02	0.1
3072	ok	0.24	0.2	1.58e-02	5.7	5.7	2.5	2.5	-32.3	1.3	2.4	-0.3	-6.74e-02	-2.64e-03

3101	ok	0.24	0.2	1.58e-02	5.7	5.7	2.5	2.5	-26.6	1.56e-02	6.9	0.1	-3.23e-02	-0.2
3130	ok	0.24	0.1	1.25e-02	5.7	5.7	2.5	2.5	-20.4	-0.7	8.2	6.02e-02	-4.68e-02	-0.3
3159	ok	0.24	8.69e-02	9.34e-03	5.7	5.7	2.5	2.5	-15.4	-2.3	8.7	-0.1	-2.34e-02	-1.58e-02
3188	ok	0.24	5.81e-02	8.06e-03	5.7	5.7	2.5	2.5	-16.7	-1.8	-7.7	0.5	0.1	0.3
3223	ok	0.24	3.93e-02	7.92e-03	5.7	5.7	2.5	2.5	-14.7	3.74e-02	-5.9	7.52e-03	8.59e-03	0.3
3280	ok	0.24	0.2	1.38e-02	5.7	5.7	2.5	2.5	-28.0	-6.46e-02	-0.8	-0.1	-7.30e-03	2.53e-02
3309	ok	0.24	0.2	1.52e-02	5.7	5.7	2.5	2.5	-22.7	1.3	7.9	-2.7	-0.6	0.2
3338	ok	0.24	0.1	1.18e-02	5.7	5.7	2.5	2.5	-20.3	-0.8	8.2	-1.9	-0.4	0.3
3367	ok	0.24	8.89e-02	8.67e-03	5.7	5.7	2.5	2.5	-13.3	-2.2	7.7	8.71e-02	1.47e-02	-1.51e-02
3396	ok	0.24	5.09e-02	7.30e-03	5.7	5.7	2.5	2.5	-12.9	0.7	-5.9	-0.6	-8.33e-02	0.2
3431	ok	0.24	4.36e-02	6.36e-03	5.7	5.7	2.5	2.5	-14.0	0.5	-5.5	8.88e-03	7.17e-02	0.3
3500	ok	0.24	0.2	1.20e-02	5.7	5.7	2.5	2.5	-23.7	-2.9	-3.5	-0.4	-4.65e-02	-1.46e-02
3557	ok	0.24	0.2	1.60e-02	5.7	5.7	2.5	2.5	-20.7	-1.5	-8.9	-2.0	-0.3	9.10e-02
3614	ok	0.24	0.1	1.06e-02	5.7	5.7	2.5	2.5	-19.5	-2.5	8.7	-2.0	-0.5	5.72e-02
3671	ok	0.24	8.66e-02	8.50e-03	5.7	5.7	2.5	2.5	-6.5	-0.8	3.6	1.0	0.2	0.1
3728	ok	0.24	4.32e-02	7.64e-03	5.7	5.7	2.5	2.5	-14.6	-1.7	-6.5	-0.6	-0.1	9.26e-02
3785	ok	0.24	3.61e-02	4.58e-03	5.7	5.7	2.5	2.5	-8.5	-0.2	-0.7	-0.1	3.22e-02	9.55e-02
3872	ok	0.24	0.1	1.15e-02	5.7	5.7	2.5	2.5	4.7	0.6	1.7	9.19e-02	2.24e-02	-3.25e-02
3901	ok	0.24	0.2	1.97e-02	5.7	5.7	2.5	2.5	-36.3	4.4	-14.1	1.2	0.5	-0.2
3930	ok	0.24	0.1	1.29e-02	5.7	5.7	2.5	2.5	10.7	-11.4	-15.6	1.4	0.6	-0.1
3959	ok	0.24	0.1	5.27e-03	5.7	5.7	2.5	2.5	-7.2	-1.8	5.7	0.9	0.2	0.2
3988	ok	0.24	4.93e-02	3.95e-03	5.7	5.7	2.5	2.5	-2.9	-0.4	5.8	0.3	0.1	0.2
4023	ok	0.24	2.62e-02	3.14e-03	5.7	5.7	2.5	2.5	-7.6	0.4	-1.5	-0.1	7.87e-03	0.2
4383	ok	0.24	0.2	0.0	5.7	5.7	2.5	2.5	25.9	22.4	-15.0	0.2	0.1	-7.55e-02
4412	ok	0.24	0.5	6.39e-02	5.7	5.7	2.5	2.5	-126.3	-46.9	-19.8	6.6	1.6	-0.3
4441	ok	0.24	0.3	1.12e-02	5.7	5.7	2.5	2.5	78.1	6.4	-8.7	2.5	0.8	-5.74e-02
4470	ok	0.24	0.1	5.38e-03	5.7	5.7	2.5	2.5	-5.7	-1.3	5.6	-0.5	-4.81e-02	0.1
4499	ok	0.24	4.72e-02	4.08e-03	5.7	5.7	2.5	2.5	-3.7	1.9	-3.6	0.4	0.1	-6.97e-02
4534	ok	0.24	3.50e-02	2.81e-03	5.7	5.7	2.5	2.5	-4.3	-2.6	3.3	0.5	6.66e-02	0.3
4710	ok	0.24	0.5	6.79e-02	5.7	5.7	2.5	2.5	-128.1	-24.8	-31.6	6.1	1.4	-7.40e-02
4769	ok	0.24	0.4	1.24e-02	5.7	5.7	2.5	2.5	81.8	15.0	8.4	2.6	0.6	0.3
4828	ok	0.24	0.2	7.70e-03	5.7	5.7	2.5	2.5	-10.8	-0.2	-4.5	1.5	0.3	0.2
4887	ok	0.24	4.80e-02	5.22e-03	5.7	5.7	2.5	2.5	-4.9	1.5	-4.8	0.4	0.2	8.80e-02
4946	ok	0.24	2.89e-02	2.39e-03	5.7	5.7	2.5	2.5	-3.5	-1.1	3.3	0.5	-7.99e-02	1.67e-02

Nodo	**x/d**	**V N/M**	**ver. rid**	**Af pr-**	**Af pr+**	**Af sec-**	**Af sec+**	**N z**	**N o**	**N zo**	**M z**	**M o**	**M zo**
								-492.40	-86.21	-31.61	-2.72	-0.59	-0.34
	0.24	0.82	0.21	5.65	5.65	2.51	2.51	81.79	22.41	120.85	6.58	1.59	0.32

Nodo	**Stato**	**Max tau**	**Ver V pr**	**Ver V sec**	**Af V pr**	**Af V sec**	**V pr**	**V sec**
		daN/cm2					kN/ m	kN/ m
368	ok	1.71						
427	ok	1.44						
486	ok	0.94						
545	ok	0.63						
604	ok	0.42						
663	ok	0.80						
780	ok	1.93						
809	ok	1.39						
838	ok	1.08						
867	ok	0.66						
896	ok	0.52						
931	ok	0.74						
988	ok	1.94						
1017	ok	1.29						
1046	ok	1.07						
1075	ok	0.64						
1104	ok	0.40						
1139	ok	0.47						
1202	ok	1.75						
1259	ok	1.31						
1316	ok	0.92						
1373	ok	0.62						
1430	ok	0.34						
1487	ok	0.48						
1544	ok	1.89						
1573	ok	1.33						
1602	ok	1.04						
1631	ok	0.65						
1660	ok	0.39						
1695	ok	0.38						
1752	ok	1.89						
1781	ok	1.32						
1810	ok	1.04						
1839	ok	0.63						
1868	ok	0.41						
1903	ok	0.41						

1966	ok	1.75						
2023	ok	1.31						
2080	ok	0.92						
2137	ok	0.63						
2194	ok	0.35						
2251	ok	0.43						
2308	ok	1.89						
2337	ok	1.33						
2366	ok	1.05						
2395	ok	0.65						
2424	ok	0.38						
2459	ok	0.41						
2516	ok	1.89						
2545	ok	1.32						
2574	ok	1.05						
2603	ok	0.63						
2632	ok	0.41						
2667	ok	0.39						
2730	ok	1.88						
2787	ok	1.36						
2844	ok	0.94						
2901	ok	0.64						
2958	ok	0.35						
3015	ok	0.41						
3072	ok	2.02						
3101	ok	1.38						
3130	ok	1.06						
3159	ok	0.67						
3188	ok	0.38						
3223	ok	0.41						
3280	ok	2.02						
3309	ok	1.35						
3338	ok	1.07						
3367	ok	0.66						
3396	ok	0.44						
3431	ok	0.42						
3500	ok	1.98						
3557	ok	2.15						
3614	ok	1.78						
3671	ok	0.76						
3728	ok	0.38						
3785	ok	0.45						
3872	ok	0.87						
3901	ok	2.74						
3930	ok	1.78						
3959	ok	0.78						
3988	ok	0.37						
4023	ok	0.45						
4383	ok	1.13						
4412	ok Av	7.16	0.32	0.04	8.1	1.1	78.1	10.3
4441	ok	1.75						
4470	ok	1.01						
4499	ok	0.40						
4534	ok	0.67						
4710	ok Av	7.38	0.33	0.09	8.1	2.2	78.7	21.0
4769	ok	1.25						
4828	ok	0.97						
4887	ok	0.33						
4946	ok	0.69						
Nodo		**Max tau**	**Ver V pr**	**Ver V sec**	**Af V pr**	**Af V sec**	**V pr**	**V sec**
		7.38	0.33	0.09	8.13	2.17	78.75	21.03

Macro Setto	Spessore	Id Materiale	Id Criterio	Progettazione
	cm			
13	15.00	1	1	Singolo elemento NON DISSIPATIVO

Nodo	Stato	x/d	V N/M	ver. rid	Af pr-	Af pr+	Af sec-	Af sec+	N z	N o	N zo	M z	M o	M zo
									kN/ m	kN/ m	kN/ m	kN	kN	kN
370	ok	0.24	0.5	0.2	5.7	5.7	2.5	2.5	-522.4	-91.2	129.1	-0.4	-7.10e-02	2.45e-02
429	ok	0.24	0.5	4.41e-02	5.7	5.7	2.5	2.5	-92.3	-23.8	4.5	3.7	0.8	-6.25e-02
488	ok	0.24	0.2	3.14e-02	5.7	5.7	2.5	2.5	-69.5	-19.2	-22.6	2.8	0.7	-4.71e-02
547	ok	0.24	0.2	2.34e-02	5.7	5.7	2.5	2.5	-55.0	-10.1	13.0	1.8	0.4	-7.09e-02

606	ok	0.24	0.1	2.26e-02	5.7	5.7	2.5	2.5	-42.1	-9.2	-5.2	0.9	0.2	-6.75e-02
665	ok	0.24	5.28e-02	3.08e-02	5.7	5.7	2.5	2.5	-54.8	-14.9	-18.6	0.1	-4.26e-02	-3.98e-02
781	ok	0.24	0.8	0.2	5.7	5.7	2.5	2.5	-442.9	-58.8	80.0	-0.5	-9.51e-02	-1.85e-02
810	ok	0.24	0.5	5.27e-02	5.7	5.7	2.5	2.5	-88.3	9.6	-1.6	3.5	0.8	0.2
839	ok	0.24	0.2	2.96e-02	5.7	5.7	2.5	2.5	-68.3	19.7	-8.5	2.6	0.6	0.2
868	ok	0.24	0.1	2.23e-02	5.7	5.7	2.5	2.5	-56.1	-8.5	0.7	1.7	0.3	0.2
897	ok	0.24	6.31e-02	2.07e-02	5.7	5.7	2.5	2.5	-40.2	-5.2	5.5	0.8	0.2	0.2
933	ok	0.24	7.08e-02	2.52e-02	5.7	5.7	2.5	2.5	-53.0	-13.4	-10.8	-1.75e-02	-0.1	0.2
989	ok	0.24	0.3	0.1	5.7	5.7	2.5	2.5	-258.9	-30.9	46.2	-0.1	-3.21e-02	-5.09e-02
1018	ok	0.24	0.2	4.69e-02	5.7	5.7	2.5	2.5	-88.6	-41.7	44.0	0.3	6.28e-02	-3.12e-02
1047	ok	0.24	0.2	3.10e-02	5.7	5.7	2.5	2.5	-47.9	7.1	-8.1	-1.9	-0.4	0.3
1076	ok	0.24	0.1	2.23e-02	5.7	5.7	2.5	2.5	-50.7	-4.4	-6.8	-1.2	-0.3	0.3
1105	ok	0.24	6.04e-02	2.12e-02	5.7	5.7	2.5	2.5	-45.9	-0.9	-10.0	-0.6	-0.1	0.3
1141	ok	0.24	6.29e-02	1.98e-02	5.7	5.7	2.5	2.5	-48.9	0.4	-2.2	-3.51e-03	-6.11e-03	0.3
1204	ok	0.24	0.3	6.78e-02	5.7	5.7	2.5	2.5	-166.4	-23.1	22.5	0.2	4.94e-02	-1.82e-02
1261	ok	0.24	0.2	4.25e-02	5.7	5.7	2.5	2.5	-86.9	-22.2	38.7	0.1	2.23e-02	-1.42e-02
1318	ok	0.24	0.1	2.64e-02	5.7	5.7	2.5	2.5	-55.8	-1.0	-8.2	-2.0	-0.4	8.91e-02
1375	ok	0.24	6.28e-02	2.21e-02	5.7	5.7	2.5	2.5	-54.4	-4.0	-6.8	-1.3	-0.3	0.1
1432	ok	0.24	4.51e-02	2.08e-02	5.7	5.7	2.5	2.5	-48.1	-1.2	-6.4	-0.6	-0.1	9.82e-02
1489	ok	0.24	2.76e-02	1.90e-02	5.7	5.7	2.5	2.5	-46.5	-1.3	-6.9	7.82e-02	1.19e-02	9.85e-02
1545	ok	0.24	0.2	4.63e-02	5.7	5.7	2.5	2.5	-115.0	-4.4	11.5	-0.4	-8.28e-02	-5.74e-03
1574	ok	0.24	0.1	3.44e-02	5.7	5.7	2.5	2.5	-77.0	-14.2	24.7	-0.3	-6.66e-02	-2.40e-02
1603	ok	0.24	0.1	2.32e-02	5.7	5.7	2.5	2.5	-38.4	-15.7	17.7	4.67e-02	1.08e-02	-2.99e-02
1632	ok	0.24	6.46e-02	1.85e-02	5.7	5.7	2.5	2.5	-42.7	-1.4	-8.1	1.2	0.3	0.3
1661	ok	0.24	3.65e-02	1.76e-02	5.7	5.7	2.5	2.5	-40.8	0.1	-9.9	0.6	0.1	0.3
1697	ok	0.24	2.20e-02	1.78e-02	5.7	5.7	2.5	2.5	-40.6	-1.84e-02	-8.3	4.81e-03	-8.24e-03	0.3
1753	ok	0.24	0.2	3.81e-02	5.7	5.7	2.5	2.5	-81.4	-6.73e-03	7.1	0.4	8.13e-02	-7.09e-03
1782	ok	0.24	0.1	3.11e-02	5.7	5.7	2.5	2.5	-71.7	-10.3	19.9	-8.54e-02	-1.13e-02	-2.07e-02
1811	ok	0.24	9.73e-02	2.34e-02	5.7	5.7	2.5	2.5	-40.2	-12.0	17.9	0.2	3.67e-02	-1.87e-02
1840	ok	0.24	6.81e-02	1.84e-02	5.7	5.7	2.5	2.5	-34.5	-0.6	-11.6	-1.3	-0.3	0.3
1869	ok	0.24	4.94e-02	1.69e-02	5.7	5.7	2.5	2.5	-35.3	0.2	-12.7	-0.6	-0.1	0.2
1905	ok	0.24	3.03e-02	1.61e-02	5.7	5.7	2.5	2.5	-36.0	0.7	-7.6	-6.51e-03	4.63e-02	0.2
1968	ok	0.24	0.2	3.46e-02	5.7	5.7	2.5	2.5	-84.3	-9.5	1.4	0.2	4.91e-02	-1.26e-02
2025	ok	0.24	0.1	2.77e-02	5.7	5.7	2.5	2.5	-64.2	-9.5	15.7	0.1	2.49e-02	-1.31e-02
2082	ok	0.24	9.66e-02	2.34e-02	5.7	5.7	2.5	2.5	-40.3	-6.1	21.2	7.61e-02	1.31e-02	-6.72e-03
2139	ok	0.24	6.57e-02	1.88e-02	5.7	5.7	2.5	2.5	-25.7	-0.8	-13.2	1.4	0.3	8.77e-02
2196	ok	0.24	4.69e-02	1.59e-02	5.7	5.7	2.5	2.5	-36.9	-2.8	-10.0	-0.6	-0.1	8.13e-02
2253	ok	0.24	3.64e-02	1.44e-02	5.7	5.7	2.5	2.5	-35.3	-3.4	-5.0	-8.48e-02	3.17e-03	9.70e-02
2309	ok	0.24	0.2	2.58e-02	5.7	5.7	2.5	2.5	-63.5	-0.3	4.2	-0.4	-8.47e-02	-5.77e-03
2338	ok	0.24	0.1	2.45e-02	5.7	5.7	2.5	2.5	-51.8	-4.7	12.3	-0.3	-6.77e-02	-2.35e-02
2367	ok	0.24	0.1	1.92e-02	5.7	5.7	2.5	2.5	-34.9	-3.6	13.6	-0.2	-5.05e-02	-1.89e-02
2396	ok	0.24	7.22e-02	1.49e-02	5.7	5.7	2.5	2.5	-26.8	-1.3	-11.3	1.3	0.3	0.3
2425	ok	0.24	5.40e-02	1.33e-02	5.7	5.7	2.5	2.5	-28.8	-1.9	-11.4	0.6	0.1	0.3
2461	ok	0.24	4.41e-02	1.33e-02	5.7	5.7	2.5	2.5	-27.0	0.1	-9.0	5.30e-03	-2.89e-03	0.3
2517	ok	0.24	0.2	2.49e-02	5.7	5.7	2.5	2.5	-49.0	1.3	3.1	-3.2	-0.5	0.2
2546	ok	0.24	0.1	2.28e-02	5.7	5.7	2.5	2.5	-43.3	-1.6	4.5	-2.5	-0.4	0.3
2575	ok	0.24	0.1	1.87e-02	5.7	5.7	2.5	2.5	-31.7	-2.3	11.9	0.2	4.64e-02	-1.90e-02
2604	ok	0.24	7.40e-02	1.47e-02	5.7	5.7	2.5	2.5	-24.0	-1.4	-11.4	-1.3	-0.3	0.3
2633	ok	0.24	4.69e-02	1.24e-02	5.7	5.7	2.5	2.5	-23.4	-1.2	-11.1	-0.6	-0.1	0.3
2669	ok	0.24	4.71e-02	1.14e-02	5.7	5.7	2.5	2.5	-26.1	9.10e-02	-8.2	1.86e-03	4.28e-02	0.3
2732	ok	0.24	0.2	2.64e-02	5.7	5.7	2.5	2.5	-39.5	-2.6	3.3	3.5	0.7	2.49e-02
2789	ok	0.24	0.2	2.14e-02	5.7	5.7	2.5	2.5	-31.2	-2.5	6.7	2.8	0.6	0.1
2846	ok	0.24	0.1	1.82e-02	5.7	5.7	2.5	2.5	-31.7	-3.5	13.5	7.36e-02	1.21e-02	-7.83e-03
2903	ok	0.24	7.63e-02	1.45e-02	5.7	5.7	2.5	2.5	-13.4	-1.0	-11.0	1.4	0.3	9.10e-02
2960	ok	0.24	5.34e-02	1.16e-02	5.7	5.7	2.5	2.5	-24.3	-2.9	-8.8	-0.6	-0.1	8.54e-02
3017	ok	0.24	4.41e-02	9.37e-03	5.7	5.7	2.5	2.5	-21.8	-2.4	-5.8	-7.29e-02	1.52e-02	0.1
3073	ok	0.24	0.2	1.80e-02	5.7	5.7	2.5	2.5	-35.9	0.4	2.2	3.3	0.5	0.2
3102	ok	0.24	0.1	1.83e-02	5.7	5.7	2.5	2.5	-33.4	-0.9	6.0	2.6	0.4	0.3
3131	ok	0.24	0.1	1.41e-02	5.7	5.7	2.5	2.5	-24.8	-1.4	8.1	-0.2	-5.39e-02	-1.95e-02
3160	ok	0.24	8.31e-02	9.72e-03	5.7	5.7	2.5	2.5	-16.0	-2.6	8.3	-0.1	-2.93e-02	-1.93e-02
3189	ok	0.24	5.77e-02	8.18e-03	5.7	5.7	2.5	2.5	-16.7	-2.2	-8.0	0.6	0.1	0.3
3225	ok	0.24	4.05e-02	7.86e-03	5.7	5.7	2.5	2.5	-14.5	-8.73e-03	-5.8	8.32e-03	9.76e-03	0.3
3281	ok	0.24	0.2	1.56e-02	5.7	5.7	2.5	2.5	-31.7	-2.42e-02	-0.2	-0.1	-9.72e-03	2.29e-02
3310	ok	0.24	0.1	1.84e-02	5.7	5.7	2.5	2.5	-35.5	0.9	2.8	-0.1	-3.96e-02	1.85e-02
3339	ok	0.24	0.1	1.36e-02	5.7	5.7	2.5	2.5	-25.8	-3.3	-3.6	-9.22e-02	-1.97e-02	2.36e-02
3368	ok	0.24	9.13e-02	8.66e-03	5.7	5.7	2.5	2.5	-13.4	-2.7	7.4	0.1	1.90e-02	-1.76e-02
3397	ok	0.24	5.13e-02	7.19e-03	5.7	5.7	2.5	2.5	-12.5	0.5	-5.8	-0.6	-8.17e-02	0.2
3433	ok	0.24	4.49e-02	6.28e-03	5.7	5.7	2.5	2.5	-13.8	0.4	-5.4	1.14e-02	7.48e-02	0.3
3502	ok	0.24	0.2	1.24e-02	5.7	5.7	2.5	2.5	-24.9	-2.8	-2.4	-0.4	-5.87e-02	-2.78e-02
3559	ok	0.24	0.1	2.10e-02	5.7	5.7	2.5	2.5	-33.7	-1.4	-12.8	0.6	0.1	-2.37e-02
3616	ok	0.24	0.1	1.22e-02	5.7	5.7	2.5	2.5	-4.0	-1.4	-14.0	0.5	7.64e-02	2.60e-02
3673	ok	0.24	8.53e-02	8.11e-03	5.7	5.7	2.5	2.5	-7.0	-1.5	3.5	1.0	0.2	0.1
3730	ok	0.24	4.48e-02	7.60e-03	5.7	5.7	2.5	2.5	-14.0	-1.7	-6.3	-0.7	-0.1	8.98e-02
3787	ok	0.24	3.71e-02	4.53e-03	5.7	5.7	2.5	2.5	-8.3	-0.2	-0.7	-0.1	3.13e-02	9.53e-02
3873	ok	0.24	0.1	1.83e-02	5.7	5.7	2.5	2.5	11.1	-32.5	1.9	7.34e-02	-7.36e-04	-1.77e-02
3902	ok	0.24	0.2	3.07e-02	5.7	5.7	2.5	2.5	-56.9	21.2	-12.8	7.93e-02	-7.52e-02	4.01e-03
3931	ok	0.24	0.2	2.33e-02	5.7	5.7	2.5	2.5	6.2	-10.0	-17.9	0.2	-5.64e-03	7.14e-02
3960	ok	0.24	0.1	5.03e-03	5.7	5.7	2.5	2.5	-7.0	-2.3	6.1	0.9	0.2	0.2
3989	ok	0.24	5.15e-02	4.02e-03	5.7	5.7	2.5	2.5	-2.8	-1.00e-01	6.5	0.3	0.1	0.2

4025	ok	0.24	2.74e-02	3.20e-03	5.7	5.7	2.5	2.5	-7.5	0.5	-1.4	-0.1	7.95e-03	0.2
4384	ok	0.24	0.3	0.0	5.7	5.7	2.5	2.5	43.4	34.3	-23.6	0.1	0.1	-5.60e-02
4413	ok	0.24	0.4	0.1	5.7	5.7	2.5	2.5	-214.2	-80.9	-25.0	-0.9	-0.2	7.29e-02
4442	ok	0.24	0.4	1.32e-02	5.7	5.7	2.5	2.5	31.1	5.6	14.7	-0.5	-8.86e-02	-2.65e-02
4471	ok	0.24	0.1	4.89e-03	5.7	5.7	2.5	2.5	-5.5	-1.4	6.3	-0.5	-4.11e-02	0.2
4500	ok	0.24	4.79e-02	4.17e-03	5.7	5.7	2.5	2.5	-3.7	2.3	-3.5	0.4	0.1	-7.53e-02
4536	ok	0.24	3.59e-02	2.92e-03	5.7	5.7	2.5	2.5	-4.1	-2.7	3.4	0.5	6.06e-02	0.3
4712	ok	0.24	0.4	0.1	5.7	5.7	2.5	2.5	-222.4	-39.1	-55.3	-1.4	-0.2	-0.1
4771	ok	0.24	0.5	1.55e-02	5.7	5.7	2.5	2.5	138.3	32.1	41.3	5.53e-02	-3.95e-02	6.43e-03
4830	ok	0.24	0.2	8.24e-03	5.7	5.7	2.5	2.5	-9.1	1.2	-4.7	1.5	0.2	0.1
4889	ok	0.24	5.05e-02	5.42e-03	5.7	5.7	2.5	2.5	-5.1	1.7	-5.1	0.4	0.2	8.42e-02
4948	ok	0.24	2.88e-02	2.35e-03	5.7	5.7	2.5	2.5	-3.4	-1.0	3.3	0.5	-8.81e-02	-1.92e-02

Nodo	**x/d**	**V N/M**	**ver. rid**	**Af pr-**	**Af pr+**	**Af sec-**	**Af sec+**	**N z**	**N o**	**N zo**	**M z**	**M o**	**M zo**
								-522.37	-91.21	-55.34	-3.18	-0.50	-0.13
	0.24	0.81	0.22	5.65	5.65	2.51	2.51	138.31	34.31	129.08	3.68	0.84	0.31

Nodo	**Stato**	**Max tau**	**Ver V pr**	**Ver V sec**	**Af V pr**	**Af V sec**	**V pr**	**V sec**
		daN/cm2					kN/ m	kN/ m
370	ok	1.74						
429	ok	1.46						
488	ok	0.95						
547	ok	0.64						
606	ok	0.43						
665	ok	0.80						
781	ok	1.96						
810	ok	1.41						
839	ok	1.09						
868	ok	0.67						
897	ok	0.53						
933	ok	0.76						
989	ok	1.96						
1018	ok	1.30						
1047	ok	1.08						
1076	ok	0.64						
1105	ok	0.40						
1141	ok	0.48						
1204	ok	1.76						
1261	ok	1.32						
1318	ok	0.94						
1375	ok	0.64						
1432	ok	0.35						
1489	ok	0.48						
1545	ok	1.91						
1574	ok	1.34						
1603	ok	1.06						
1632	ok	0.66						
1661	ok	0.40						
1697	ok	0.38						
1753	ok	1.91						
1782	ok	1.33						
1811	ok	1.06						
1840	ok	0.65						
1869	ok	0.42						
1905	ok	0.42						
1968	ok	1.77						
2025	ok	1.34						
2082	ok	0.94						
2139	ok	0.64						
2196	ok	0.36						
2253	ok	0.43						
2309	ok	1.92						
2338	ok	1.35						
2367	ok	1.07						
2396	ok	0.67						
2425	ok	0.39						
2461	ok	0.41						
2517	ok	1.92						
2546	ok	1.34						
2575	ok	1.07						
2604	ok	0.64						
2633	ok	0.41						
2669	ok	0.40						
2732	ok	1.88						
2789	ok	1.37						
2846	ok	0.96						
2903	ok	0.65						

2960	ok	0.36						
3017	ok	0.41						
3073	ok	2.02						
3102	ok	1.39						
3131	ok	1.08						
3160	ok	0.68						
3189	ok	0.39						
3225	ok	0.42						
3281	ok	2.02						
3310	ok	1.35						
3339	ok	1.08						
3368	ok	0.67						
3397	ok	0.45						
3433	ok	0.42						
3502	ok	1.98						
3559	ok	2.12						
3616	ok	1.79						
3673	ok	0.77						
3730	ok	0.39						
3787	ok	0.45						
3873	ok	0.85						
3902	ok	2.68						
3931	ok	1.78						
3960	ok	0.79						
3989	ok	0.37						
4025	ok	0.45						
4384	ok	1.11						
4413	ok Av	7.00	0.32	0.04	7.9	1.0	76.4	9.5
4442	ok	1.75						
4471	ok	1.02						
4500	ok	0.40						
4536	ok	0.68						
4712	ok Av	7.25	0.32	0.09	7.9	2.1	76.9	20.8
4771	ok	1.21						
4830	ok	0.97						
4889	ok	0.33						
4948	ok	0.70						
Nodo		**Max tau**	**Ver V pr**	**Ver V sec**	**Af V pr**	**Af V sec**	**V pr**	**V sec**
		7.25	0.32	0.09	7.94	2.15	76.94	20.80

Macro Setto	Spessore	Id Materiale	Id Criterio	Progettazione
	cm			
14	15.00	1	1	Singolo elemento NON DISSIPATIVO

Nodo	Stato	x/d	V N/M	ver. rid	Af pr-	Af pr+	Af sec-	Af sec+	N z	N o	N zo	M z	M o	M zo
									kN/ m	kN/ m	kN/ m	kN	kN	kN
372	ok	0.24	0.5	0.2	5.7	5.7	2.5	2.5	-534.1	-93.2	132.4	-0.2	-5.75e-02	-6.85e-03
431	ok	0.24	0.5	4.35e-02	5.7	5.7	2.5	2.5	-92.5	-23.8	5.1	3.7	0.8	-7.32e-02
490	ok	0.24	0.2	3.12e-02	5.7	5.7	2.5	2.5	-68.7	-19.1	-22.6	2.8	0.7	-5.02e-02
549	ok	0.24	0.2	2.33e-02	5.7	5.7	2.5	2.5	-54.7	-10.0	12.9	1.8	0.4	-7.29e-02
608	ok	0.24	0.1	2.26e-02	5.7	5.7	2.5	2.5	-42.0	-9.2	-5.4	0.9	0.2	-6.85e-02
667	ok	0.24	5.32e-02	3.08e-02	5.7	5.7	2.5	2.5	-54.5	-15.0	-16.9	0.1	-3.77e-02	-3.93e-02
782	ok	0.24	0.8	0.2	5.7	5.7	2.5	2.5	-449.5	-58.6	80.7	-0.4	-9.17e-02	-1.31e-02
811	ok	0.24	0.5	5.54e-02	5.7	5.7	2.5	2.5	-88.7	8.7	-0.7	3.5	0.8	0.2
840	ok	0.24	0.2	2.95e-02	5.7	5.7	2.5	2.5	-68.1	19.4	-8.3	2.6	0.6	0.2
869	ok	0.24	0.1	2.22e-02	5.7	5.7	2.5	2.5	-55.9	-8.7	0.7	1.7	0.3	0.2
898	ok	0.24	6.29e-02	2.07e-02	5.7	5.7	2.5	2.5	-40.1	-5.2	5.4	0.8	0.2	0.2
935	ok	0.24	7.09e-02	2.52e-02	5.7	5.7	2.5	2.5	-52.7	-13.3	-9.0	-4.99e-03	-0.1	0.2
990	ok	0.24	0.3	0.1	5.7	5.7	2.5	2.5	-262.7	-30.9	46.5	-0.1	-3.13e-02	-4.18e-02
1019	ok	0.24	0.2	4.78e-02	5.7	5.7	2.5	2.5	-90.1	-42.3	45.2	0.3	6.14e-02	-2.43e-02
1048	ok	0.24	0.2	3.10e-02	5.7	5.7	2.5	2.5	-72.1	1.7	1.4	0.3	8.16e-02	0.4
1077	ok	0.24	0.1	2.23e-02	5.7	5.7	2.5	2.5	-50.6	-4.6	-6.6	-1.2	-0.3	0.3
1106	ok	0.24	6.07e-02	2.12e-02	5.7	5.7	2.5	2.5	-45.7	-0.9	-9.9	-0.6	-0.1	0.3
1143	ok	0.24	6.26e-02	1.97e-02	5.7	5.7	2.5	2.5	-48.6	0.3	-2.2	-3.07e-03	-6.23e-03	0.3
1206	ok	0.24	0.3	6.87e-02	5.7	5.7	2.5	2.5	-168.8	-23.2	22.7	0.2	4.70e-02	-1.50e-02
1263	ok	0.24	0.2	4.33e-02	5.7	5.7	2.5	2.5	-88.4	-22.5	39.7	0.1	2.25e-02	-1.32e-02
1320	ok	0.24	0.1	2.70e-02	5.7	5.7	2.5	2.5	-56.1	-1.3	-7.7	-2.1	-0.4	8.91e-02
1377	ok	0.24	6.33e-02	2.21e-02	5.7	5.7	2.5	2.5	-54.5	-4.1	-6.5	-1.3	-0.3	0.1
1434	ok	0.24	4.46e-02	2.07e-02	5.7	5.7	2.5	2.5	-48.0	-1.3	-6.3	-0.6	-0.1	9.82e-02
1491	ok	0.24	2.72e-02	1.89e-02	5.7	5.7	2.5	2.5	-46.3	-1.3	-6.9	7.51e-02	9.45e-03	9.99e-02
1546	ok	0.24	0.2	4.71e-02	5.7	5.7	2.5	2.5	-117.0	-4.3	11.6	-0.4	-8.23e-02	-9.34e-03
1575	ok	0.24	0.1	3.50e-02	5.7	5.7	2.5	2.5	-78.5	-14.4	25.1	-0.3	-6.55e-02	-2.64e-02

1604	ok	0.24	0.1	2.38e-02	5.7	5.7	2.5	2.5	-39.1	-16.0	18.1	4.33e-02	1.08e-02	-3.20e-02
1633	ok	0.24	6.54e-02	1.85e-02	5.7	5.7	2.5	2.5	-42.8	-1.6	-8.0	1.3	0.3	0.3
1662	ok	0.24	3.62e-02	1.75e-02	5.7	5.7	2.5	2.5	-40.8	4.42e-02	-9.8	0.6	0.1	0.3
1699	ok	0.24	2.24e-02	1.78e-02	5.7	5.7	2.5	2.5	-40.5	-4.05e-02	-8.3	3.59e-03	-1.06e-02	0.3
1754	ok	0.24	0.2	3.88e-02	5.7	5.7	2.5	2.5	-83.0	4.45e-02	7.2	0.4	8.15e-02	-9.21e-03
1783	ok	0.24	0.1	3.17e-02	5.7	5.7	2.5	2.5	-73.0	-10.4	20.3	-7.80e-02	-8.07e-03	-2.32e-02
1812	ok	0.24	9.60e-02	2.40e-02	5.7	5.7	2.5	2.5	-41.0	-12.2	18.3	0.2	3.86e-02	-2.07e-02
1841	ok	0.24	6.73e-02	1.86e-02	5.7	5.7	2.5	2.5	-34.7	-0.8	-11.5	-1.3	-0.3	0.3
1870	ok	0.24	4.92e-02	1.69e-02	5.7	5.7	2.5	2.5	-35.2	0.1	-12.6	-0.6	-0.1	0.3
1907	ok	0.24	3.16e-02	1.60e-02	5.7	5.7	2.5	2.5	-35.8	0.6	-7.5	-1.55e-02	4.16e-02	0.3
1970	ok	0.24	0.2	3.55e-02	5.7	5.7	2.5	2.5	-85.7	-9.6	1.4	0.2	5.46e-02	-1.18e-02
2027	ok	0.24	0.1	2.85e-02	5.7	5.7	2.5	2.5	-65.4	-9.6	16.0	0.2	3.06e-02	-1.42e-02
2084	ok	0.24	9.71e-02	2.40e-02	5.7	5.7	2.5	2.5	-41.1	-6.3	21.6	9.23e-02	1.75e-02	-7.98e-03
2141	ok	0.24	6.62e-02	1.91e-02	5.7	5.7	2.5	2.5	-25.9	-0.9	-13.3	1.4	0.3	8.82e-02
2198	ok	0.24	4.70e-02	1.59e-02	5.7	5.7	2.5	2.5	-36.8	-2.9	-9.8	-0.6	-0.1	8.15e-02
2255	ok	0.24	3.62e-02	1.43e-02	5.7	5.7	2.5	2.5	-35.2	-3.4	-4.9	-7.90e-02	-7.87e-03	9.84e-02
2310	ok	0.24	0.2	2.67e-02	5.7	5.7	2.5	2.5	-64.9	-0.3	4.2	-0.4	-8.34e-02	-9.56e-03
2339	ok	0.24	0.1	2.53e-02	5.7	5.7	2.5	2.5	-53.0	-4.8	12.4	-0.3	-6.78e-02	-2.61e-02
2368	ok	0.24	0.1	1.98e-02	5.7	5.7	2.5	2.5	-35.8	-3.7	13.7	-0.2	-5.09e-02	-2.14e-02
2397	ok	0.24	7.32e-02	1.52e-02	5.7	5.7	2.5	2.5	-27.1	-1.4	-11.3	1.3	0.3	0.3
2426	ok	0.24	5.48e-02	1.33e-02	5.7	5.7	2.5	2.5	-28.8	-1.9	-11.5	0.6	0.1	0.3
2463	ok	0.24	4.53e-02	1.33e-02	5.7	5.7	2.5	2.5	-26.9	0.1	-9.1	4.26e-03	-5.22e-03	0.3
2518	ok	0.24	0.2	2.58e-02	5.7	5.7	2.5	2.5	-50.5	1.4	3.1	-3.2	-0.5	0.2
2547	ok	0.24	0.1	2.36e-02	5.7	5.7	2.5	2.5	-44.6	-1.6	4.6	-2.6	-0.4	0.3
2576	ok	0.24	0.1	1.92e-02	5.7	5.7	2.5	2.5	-32.5	-2.3	12.0	0.2	4.93e-02	-2.12e-02
2605	ok	0.24	7.46e-02	1.50e-02	5.7	5.7	2.5	2.5	-24.3	-1.5	-11.5	-1.3	-0.3	0.3
2634	ok	0.24	4.72e-02	1.24e-02	5.7	5.7	2.5	2.5	-23.4	-1.3	-11.1	-0.6	-0.1	0.3
2671	ok	0.24	4.85e-02	1.13e-02	5.7	5.7	2.5	2.5	-25.9	6.78e-02	-8.2	2.02e-03	3.95e-02	0.3
2734	ok	0.24	0.2	2.73e-02	5.7	5.7	2.5	2.5	-41.0	-2.7	3.4	3.5	0.7	2.71e-02
2791	ok	0.24	0.1	2.22e-02	5.7	5.7	2.5	2.5	-32.5	-2.6	6.5	2.8	0.6	0.1
2848	ok	0.24	0.1	1.88e-02	5.7	5.7	2.5	2.5	-28.5	-2.6	-3.5	0.2	4.25e-02	4.76e-03
2905	ok	0.24	7.46e-02	1.47e-02	5.7	5.7	2.5	2.5	-13.7	-1.0	-11.4	1.4	0.3	9.22e-02
2962	ok	0.24	5.28e-02	1.17e-02	5.7	5.7	2.5	2.5	-24.2	-3.0	-8.8	-0.6	-0.1	8.65e-02
3019	ok	0.24	4.48e-02	9.34e-03	5.7	5.7	2.5	2.5	-21.7	-2.4	-5.9	-6.82e-02	1.33e-02	0.1
3074	ok	0.24	0.2	1.89e-02	5.7	5.7	2.5	2.5	-37.4	0.5	2.3	3.3	0.5	0.2
3103	ok	0.24	0.1	1.92e-02	5.7	5.7	2.5	2.5	-34.9	-0.9	5.9	2.6	0.4	0.3
3132	ok	0.24	0.1	1.47e-02	5.7	5.7	2.5	2.5	-25.7	-1.4	7.8	-0.2	-5.47e-02	-2.20e-02
3161	ok	0.24	8.20e-02	9.87e-03	5.7	5.7	2.5	2.5	-16.1	-2.8	8.3	-0.1	-2.91e-02	-2.27e-02
3190	ok	0.24	5.85e-02	8.23e-03	5.7	5.7	2.5	2.5	-16.6	-2.3	-8.3	0.6	0.1	0.3
3227	ok	0.24	4.24e-02	7.89e-03	5.7	5.7	2.5	2.5	-14.4	-2.04e-02	-6.0	6.65e-03	7.54e-03	0.3
3282	ok	0.24	0.2	1.64e-02	5.7	5.7	2.5	2.5	-33.4	-8.37e-03	-7.40e-02	-0.1	-7.52e-03	2.04e-02
3311	ok	0.24	0.1	1.95e-02	5.7	5.7	2.5	2.5	-39.2	0.8	3.3	-9.62e-02	-2.52e-02	1.65e-02
3340	ok	0.24	0.1	1.42e-02	5.7	5.7	2.5	2.5	-26.8	-3.6	-4.4	-7.34e-02	-1.57e-02	2.00e-02
3369	ok	0.24	9.18e-02	8.68e-03	5.7	5.7	2.5	2.5	-13.4	-2.9	7.4	0.1	2.64e-02	-2.43e-02
3398	ok	0.24	5.10e-02	7.17e-03	5.7	5.7	2.5	2.5	-12.3	0.4	-6.0	-0.6	-7.93e-02	0.2
3435	ok	0.24	4.49e-02	6.26e-03	5.7	5.7	2.5	2.5	-13.7	0.4	-5.5	1.06e-02	7.04e-02	0.3
3504	ok	0.24	0.2	1.29e-02	5.7	5.7	2.5	2.5	-26.0	-2.8	-2.1	-0.4	-4.59e-02	-1.94e-02
3561	ok	0.24	0.1	2.27e-02	5.7	5.7	2.5	2.5	-36.3	-1.4	-13.3	2.5	0.4	-7.60e-02
3618	ok	0.24	0.1	1.29e-02	5.7	5.7	2.5	2.5	-4.6	-1.9	-15.4	1.9	0.3	0.1
3675	ok	0.24	8.50e-02	8.06e-03	5.7	5.7	2.5	2.5	-6.6	-1.7	3.6	1.0	0.2	0.1
3732	ok	0.24	4.49e-02	7.60e-03	5.7	5.7	2.5	2.5	-13.8	-1.7	-6.4	-0.7	-0.1	9.07e-02
3789	ok	0.24	3.83e-02	4.51e-03	5.7	5.7	2.5	2.5	-8.2	-9.21e-02	-0.8	-0.1	2.75e-02	9.58e-02
3874	ok	0.24	0.1	2.05e-02	5.7	5.7	2.5	2.5	12.7	-36.5	2.3	5.99e-02	-5.62e-04	-1.85e-02
3903	ok	0.24	0.2	3.45e-02	5.7	5.7	2.5	2.5	-63.5	24.1	-15.1	5.85e-02	-3.89e-02	-1.16e-02
3932	ok	0.24	0.2	2.67e-02	5.7	5.7	2.5	2.5	7.2	-11.5	-19.6	1.7	-5.90e-03	0.3
3961	ok	0.24	0.1	5.01e-03	5.7	5.7	2.5	2.5	-6.5	-2.4	6.3	0.9	0.2	0.2
3990	ok	0.24	5.27e-02	4.07e-03	5.7	5.7	2.5	2.5	-2.6	1.93e-03	6.8	0.3	0.1	0.2
4027	ok	0.24	2.80e-02	3.21e-03	5.7	5.7	2.5	2.5	-7.4	0.6	-1.5	-0.1	4.82e-03	0.2
4385	ok	0.24	0.3	0.0	5.7	5.7	2.5	2.5	49.2	38.2	-26.4	4.69e-02	6.79e-02	-2.92e-02
4414	ok	0.24	0.4	0.1	5.7	5.7	2.5	2.5	-242.5	-90.9	-30.2	-0.4	-0.1	9.20e-02
4443	ok	0.24	0.5	1.35e-02	5.7	5.7	2.5	2.5	33.3	6.2	15.5	-0.5	-9.89e-02	-2.32e-02
4472	ok	0.24	0.1	4.81e-03	5.7	5.7	2.5	2.5	-5.1	-1.1	6.7	-0.5	-4.41e-02	0.2
4501	ok	0.24	4.78e-02	4.23e-03	5.7	5.7	2.5	2.5	-3.8	2.4	-3.5	0.4	0.1	-7.63e-02
4538	ok	0.24	3.65e-02	2.92e-03	5.7	5.7	2.5	2.5	-0.5	8.15e-02	-1.8	-0.3	-9.82e-03	-0.1
4714	ok	0.24	0.4	0.1	5.7	5.7	2.5	2.5	-252.8	-45.7	-64.6	-0.6	-0.1	-4.45e-02
4773	ok	0.24	0.6	1.59e-02	5.7	5.7	2.5	2.5	159.6	37.1	46.4	-0.2	-6.70e-02	-1.11e-02
4832	ok	0.24	0.2	8.53e-03	5.7	5.7	2.5	2.5	-8.3	1.6	-4.8	1.5	0.2	0.1
4891	ok	0.24	5.18e-02	5.51e-03	5.7	5.7	2.5	2.5	-5.3	1.8	-5.1	0.4	0.2	8.65e-02
4950	ok	0.24	2.90e-02	2.18e-03	5.7	5.7	2.5	2.5	0.4	2.5	-1.9	-0.3	6.44e-02	-6.34e-03

Nodo	**x/d**	**V N/M**	**ver. rid**	**Af pr-**	**Af pr+**	**Af sec-**	**Af sec+**	**N z**	**N o**	**N zo**	**M z**	**M o**	**M zo**
								-534.14	-93.20	-64.65	-3.21	-0.51	-0.15
	0.24	0.81	0.23	5.65	5.65	2.51	2.51	159.65	38.21	132.45	3.73	0.84	0.38

Nodo	**Stato**	**Max tau**	**Ver V pr**	**Ver V sec**	**Af V pr**	**Af V sec**	**V pr**	**V sec**
		daN/cm2					kN/ m	kN/ m
372	ok	1.79						

431	ok	1.47
490	ok	0.95
549	ok	0.65
608	ok	0.43
667	ok	0.81
782	ok	1.99
811	ok	1.43
840	ok	1.10
869	ok	0.68
898	ok	0.53
935	ok	0.78
990	ok	1.99
1019	ok	1.32
1048	ok	1.09
1077	ok	0.65
1106	ok	0.40
1143	ok	0.48
1206	ok	1.78
1263	ok	1.34
1320	ok	0.95
1377	ok	0.64
1434	ok	0.35
1491	ok	0.48
1546	ok	1.93
1575	ok	1.35
1604	ok	1.07
1633	ok	0.67
1662	ok	0.40
1699	ok	0.39
1754	ok	1.93
1783	ok	1.35
1812	ok	1.07
1841	ok	0.65
1870	ok	0.42
1907	ok	0.43
1970	ok	1.79
2027	ok	1.35
2084	ok	0.95
2141	ok	0.65
2198	ok	0.36
2255	ok	0.43
2310	ok	1.94
2339	ok	1.36
2368	ok	1.08
2397	ok	0.67
2426	ok	0.40
2463	ok	0.41
2518	ok	1.94
2547	ok	1.35
2576	ok	1.08
2605	ok	0.65
2634	ok	0.42
2671	ok	0.40
2734	ok	1.89
2791	ok	1.38
2848	ok	0.97
2905	ok	0.66
2962	ok	0.36
3019	ok	0.41
3074	ok	2.03
3103	ok	1.40
3132	ok	1.08
3161	ok	0.68
3190	ok	0.39
3227	ok	0.42
3282	ok	2.03
3311	ok	1.35
3340	ok	1.09
3369	ok	0.67
3398	ok	0.45
3435	ok	0.43
3504	ok	2.00
3561	ok	2.10
3618	ok	1.78
3675	ok	0.77
3732	ok	0.39
3789	ok	0.45
3874	ok	0.85
3903	ok	2.66

3932	ok	1.77						
3961	ok	0.79						
3990	ok	0.37						
4027	ok	0.46						
4385	ok	1.10						
4414	ok Av	6.88	0.31	0.04	7.8	0.9	75.2	8.6
4443	ok	1.77						
4472	ok	1.03						
4501	ok	0.40						
4538	ok	0.70						
4714	ok Av	7.14	0.31	0.09	7.8	2.2	75.5	21.6
4773	ok	1.19						
4832	ok	0.97						
4891	ok	0.33						
4950	ok	0.72						
Nodo		**Max tau**	**Ver V pr**	**Ver V sec**	**Af V pr**	**Af V sec**	**V pr**	**V sec**
		7.14	0.31	0.09	7.80	2.23	75.52	21.58

Macro Setto	Spessore	Id Materiale	Id Criterio	Progettazione
	cm			
15	15.00	1	1	Singolo elemento NON DISSIPATIVO

Nodo	Stato	x/d	V N/M	ver. rid	Af pr-	Af pr+	Af sec-	Af sec+	N z	N o	N zo	M z	M o	M zo
									kN/ m	kN/ m	kN/ m	kN	kN	kN
374	ok	0.24	0.5	0.2	5.7	5.7	2.5	2.5	-518.2	-90.5	128.2	-7.44e-02	-4.41e-02	-3.71e-02
433	ok	0.24	0.5	4.37e-02	5.7	5.7	2.5	2.5	-91.1	-23.6	4.6	3.8	0.8	-8.24e-02
492	ok	0.24	0.2	3.12e-02	5.7	5.7	2.5	2.5	-68.7	-19.6	-22.5	2.8	0.7	-5.24e-02
551	ok	0.24	0.2	2.32e-02	5.7	5.7	2.5	2.5	-54.5	-10.1	12.9	1.8	0.4	-7.45e-02
610	ok	0.24	0.1	2.26e-02	5.7	5.7	2.5	2.5	-41.9	-9.2	-5.4	0.9	0.2	-6.90e-02
669	ok	0.24	5.33e-02	3.08e-02	5.7	5.7	2.5	2.5	-54.3	-15.0	-16.9	9.87e-02	-3.32e-02	-3.86e-02
783	ok	0.24	0.8	0.2	5.7	5.7	2.5	2.5	-438.9	-58.1	79.1	-0.4	-8.79e-02	-8.20e-03
812	ok	0.24	0.5	5.25e-02	5.7	5.7	2.5	2.5	-87.3	9.4	-1.5	3.6	0.8	0.2
841	ok	0.24	0.2	2.93e-02	5.7	5.7	2.5	2.5	-67.6	19.5	-8.4	2.6	0.6	0.2
870	ok	0.24	0.1	2.21e-02	5.7	5.7	2.5	2.5	-55.6	-8.6	0.6	1.7	0.4	0.2
899	ok	0.24	6.21e-02	2.07e-02	5.7	5.7	2.5	2.5	-40.0	-5.2	5.4	0.8	0.2	0.2
937	ok	0.24	7.06e-02	2.52e-02	5.7	5.7	2.5	2.5	-52.5	-13.2	-9.0	5.74e-03	-0.1	0.2
991	ok	0.24	0.3	0.1	5.7	5.7	2.5	2.5	-256.7	-30.6	45.7	-0.1	-3.03e-02	-3.31e-02
1020	ok	0.24	0.2	4.64e-02	5.7	5.7	2.5	2.5	-87.8	-41.4	43.6	0.3	5.97e-02	-1.78e-02
1049	ok	0.24	0.2	3.07e-02	5.7	5.7	2.5	2.5	-47.3	6.9	-8.0	-1.9	-0.4	0.3
1078	ok	0.24	0.1	2.21e-02	5.7	5.7	2.5	2.5	-50.3	-4.4	-6.9	-1.3	-0.3	0.3
1107	ok	0.24	6.13e-02	2.12e-02	5.7	5.7	2.5	2.5	-45.5	-0.9	-10.0	-0.6	-0.1	0.3
1145	ok	0.24	6.23e-02	1.96e-02	5.7	5.7	2.5	2.5	-48.4	0.4	-2.3	-2.49e-03	-6.35e-03	0.3
1208	ok	0.24	0.3	6.72e-02	5.7	5.7	2.5	2.5	-165.1	-22.9	22.2	0.1	4.46e-02	-1.18e-02
1265	ok	0.24	0.2	4.21e-02	5.7	5.7	2.5	2.5	-86.2	-22.0	38.3	9.55e-02	2.28e-02	-1.23e-02
1322	ok	0.24	0.1	2.63e-02	5.7	5.7	2.5	2.5	-55.2	-1.1	-8.2	-2.1	-0.4	8.94e-02
1379	ok	0.24	6.36e-02	2.20e-02	5.7	5.7	2.5	2.5	-54.0	-4.0	-6.8	-1.3	-0.3	0.1
1436	ok	0.24	4.55e-02	2.07e-02	5.7	5.7	2.5	2.5	-39.6	-3.4	-11.5	0.6	0.1	8.90e-02
1493	ok	0.24	2.69e-02	1.88e-02	5.7	5.7	2.5	2.5	-46.2	-1.3	-6.8	7.10e-02	8.28e-03	0.1
1547	ok	0.24	0.2	4.59e-02	5.7	5.7	2.5	2.5	-114.0	-4.3	11.4	-0.4	-8.17e-02	-1.30e-02
1576	ok	0.24	0.1	3.41e-02	5.7	5.7	2.5	2.5	-76.4	-14.1	24.4	-0.3	-6.44e-02	-2.87e-02
1605	ok	0.24	0.1	2.31e-02	5.7	5.7	2.5	2.5	-38.0	-15.6	17.5	3.97e-02	1.07e-02	-3.42e-02
1634	ok	0.24	6.55e-02	1.84e-02	5.7	5.7	2.5	2.5	-42.3	-1.4	-8.1	1.3	0.3	0.3
1663	ok	0.24	3.66e-02	1.74e-02	5.7	5.7	2.5	2.5	-40.5	9.26e-02	-9.9	0.6	0.1	0.3
1701	ok	0.24	2.24e-02	1.77e-02	5.7	5.7	2.5	2.5	-40.4	-2.15e-02	-8.3	2.40e-03	-1.29e-02	0.3
1755	ok	0.24	0.2	3.78e-02	5.7	5.7	2.5	2.5	-94.2	-3.9	8.0	-9.48e-02	-2.11e-02	-4.48e-02
1784	ok	0.24	0.1	3.08e-02	5.7	5.7	2.5	2.5	-71.1	-10.2	19.7	-7.04e-02	-4.87e-03	-2.58e-02
1813	ok	0.24	9.80e-02	2.33e-02	5.7	5.7	2.5	2.5	-39.5	-7.4	19.6	0.2	5.04e-02	-2.31e-02
1842	ok	0.24	6.87e-02	1.83e-02	5.7	5.7	2.5	2.5	-34.2	-0.6	-11.6	-1.3	-0.3	0.3
1871	ok	0.24	4.99e-02	1.68e-02	5.7	5.7	2.5	2.5	-35.5	-0.9	-9.3	-0.6	-9.34e-02	0.2
1909	ok	0.24	3.15e-02	1.60e-02	5.7	5.7	2.5	2.5	-35.7	0.7	-7.5	-2.35e-02	3.70e-02	0.3
1972	ok	0.24	0.2	3.45e-02	5.7	5.7	2.5	2.5	-83.7	-9.5	1.3	0.2	6.00e-02	-1.12e-02
2029	ok	0.24	0.1	2.76e-02	5.7	5.7	2.5	2.5	-63.6	-9.4	15.6	0.2	3.62e-02	-1.53e-02
2086	ok	0.24	9.76e-02	2.33e-02	5.7	5.7	2.5	2.5	-39.9	-6.1	21.1	0.1	2.18e-02	-9.26e-03
2143	ok	0.24	6.80e-02	1.88e-02	5.7	5.7	2.5	2.5	-36.2	-3.0	-12.6	-1.3	-0.3	8.77e-02
2200	ok	0.24	4.76e-02	1.58e-02	5.7	5.7	2.5	2.5	-36.5	-2.8	-9.9	-0.6	-0.1	8.20e-02
2257	ok	0.24	3.58e-02	1.43e-02	5.7	5.7	2.5	2.5	-35.1	-3.4	-5.0	-7.29e-02	-9.14e-03	9.98e-02
2311	ok	0.24	0.2	2.57e-02	5.7	5.7	2.5	2.5	-63.0	-0.3	4.1	-0.4	-8.20e-02	-1.34e-02
2340	ok	0.24	0.1	2.44e-02	5.7	5.7	2.5	2.5	-51.3	-4.7	12.3	-0.3	-6.79e-02	-2.87e-02
2369	ok	0.24	0.1	1.92e-02	5.7	5.7	2.5	2.5	-34.6	-3.5	13.6	-0.2	-5.12e-02	-2.39e-02
2398	ok	0.24	7.55e-02	1.49e-02	5.7	5.7	2.5	2.5	-26.6	-1.3	-11.3	1.3	0.3	0.3
2427	ok	0.24	5.55e-02	1.32e-02	5.7	5.7	2.5	2.5	-28.6	-1.8	-11.4	0.6	0.1	0.3
2465	ok	0.24	4.58e-02	1.33e-02	5.7	5.7	2.5	2.5	-26.8	0.2	-9.0	3.20e-03	-7.36e-03	0.3

2519	ok	0.24	0.2	2.48e-02	5.7	5.7	2.5	2.5	-48.6	1.3	3.1	-3.2	-0.5	0.2
2548	ok	0.24	0.1	2.27e-02	5.7	5.7	2.5	2.5	-43.0	-1.6	4.6	-2.5	-0.4	0.3
2577	ok	0.24	0.1	1.86e-02	5.7	5.7	2.5	2.5	-31.4	-2.2	12.0	0.2	4.55e-02	-2.01e-02
2606	ok	0.24	7.68e-02	1.47e-02	5.7	5.7	2.5	2.5	-23.8	-1.4	-11.4	-1.3	-0.3	0.3
2635	ok	0.24	4.80e-02	1.23e-02	5.7	5.7	2.5	2.5	-23.1	-1.2	-11.1	-0.6	-0.1	0.3
2673	ok	0.24	4.88e-02	1.13e-02	5.7	5.7	2.5	2.5	-21.9	0.5	-7.6	-1.18e-02	4.45e-02	0.3
2736	ok	0.24	0.2	2.63e-02	5.7	5.7	2.5	2.5	-39.2	-2.6	3.3	3.5	0.7	2.80e-02
2793	ok	0.24	0.2	2.13e-02	5.7	5.7	2.5	2.5	-31.0	-2.5	6.6	2.8	0.6	0.1
2850	ok	0.24	0.1	1.81e-02	5.7	5.7	2.5	2.5	-31.4	-3.4	13.6	9.71e-02	1.85e-02	-7.25e-03
2907	ok	0.24	7.63e-02	1.45e-02	5.7	5.7	2.5	2.5	-13.2	-0.9	-11.2	1.4	0.3	9.31e-02
2964	ok	0.24	5.30e-02	1.16e-02	5.7	5.7	2.5	2.5	-24.0	-2.9	-8.8	-0.6	-0.1	8.73e-02
3021	ok	0.24	4.44e-02	9.28e-03	5.7	5.7	2.5	2.5	-21.5	-2.3	-5.9	-6.29e-02	1.18e-02	0.1
3075	ok	0.24	0.2	1.79e-02	5.7	5.7	2.5	2.5	-35.5	0.5	2.1	3.3	0.5	0.2
3104	ok	0.24	0.2	1.82e-02	5.7	5.7	2.5	2.5	-33.2	-0.9	5.9	2.6	0.4	0.3
3133	ok	0.24	0.1	1.41e-02	5.7	5.7	2.5	2.5	-24.1	-1.5	8.3	-0.2	-4.42e-02	-2.37e-02
3162	ok	0.24	8.40e-02	9.68e-03	5.7	5.7	2.5	2.5	-13.3	-1.8	-9.3	1.3	0.3	0.3
3191	ok	0.24	5.94e-02	8.16e-03	5.7	5.7	2.5	2.5	-16.5	-1.3	-7.8	0.6	0.1	0.3
3229	ok	0.24	4.27e-02	7.84e-03	5.7	5.7	2.5	2.5	-14.2	1.37e-02	-6.0	6.13e-03	5.47e-03	0.3
3283	ok	0.24	0.2	1.55e-02	5.7	5.7	2.5	2.5	-31.5	-2.58e-02	-0.2	-8.73e-02	-5.35e-03	1.80e-02
3312	ok	0.24	0.2	1.82e-02	5.7	5.7	2.5	2.5	-28.9	-0.2	-8.0	-2.7	-0.6	0.2
3341	ok	0.24	0.1	1.35e-02	5.7	5.7	2.5	2.5	-15.8	-1.9	-8.9	-1.9	-0.4	0.3
3370	ok	0.24	9.23e-02	8.64e-03	5.7	5.7	2.5	2.5	-13.3	-2.6	7.4	0.1	2.99e-02	-2.75e-02
3399	ok	0.24	5.18e-02	7.12e-03	5.7	5.7	2.5	2.5	-12.1	0.6	-6.0	-0.6	-7.66e-02	0.2
3437	ok	0.24	4.44e-02	6.22e-03	5.7	5.7	2.5	2.5	-13.5	0.4	-5.5	9.81e-03	6.62e-02	0.3
3506	ok	0.24	0.2	1.23e-02	5.7	5.7	2.5	2.5	-24.7	-2.8	-2.4	-0.3	-3.32e-02	-1.09e-02
3563	ok	0.24	0.1	2.08e-02	5.7	5.7	2.5	2.5	-34.8	-1.7	-12.9	2.4	0.4	-7.08e-02
3620	ok	0.24	0.1	1.22e-02	5.7	5.7	2.5	2.5	-14.4	-3.4	-9.2	-2.0	-0.5	7.46e-02
3677	ok	0.24	8.44e-02	8.11e-03	5.7	5.7	2.5	2.5	-6.6	-1.5	3.4	1.0	0.2	0.1
3734	ok	0.24	4.53e-02	7.55e-03	5.7	5.7	2.5	2.5	-13.7	-1.6	-6.5	-0.7	-0.1	9.14e-02
3791	ok	0.24	3.79e-02	4.45e-03	5.7	5.7	2.5	2.5	-10.0	-0.9	-3.3	-4.92e-02	4.41e-02	0.1
3875	ok	0.24	0.1	1.80e-02	5.7	5.7	2.5	2.5	10.9	-32.1	1.8	4.58e-02	-3.88e-04	-1.89e-02
3904	ok	0.24	0.2	3.03e-02	5.7	5.7	2.5	2.5	-61.8	7.8	-21.7	-1.3	-0.6	0.2
3933	ok	0.24	0.2	2.29e-02	5.7	5.7	2.5	2.5	15.3	-18.3	-26.9	-1.5	-0.6	0.2
3962	ok	0.24	0.1	4.96e-03	5.7	5.7	2.5	2.5	-6.7	-2.2	6.0	0.9	0.2	0.2
3991	ok	0.24	5.17e-02	3.96e-03	5.7	5.7	2.5	2.5	-2.6	-2.06e-02	6.4	0.3	0.1	0.2
4029	ok	0.24	2.75e-02	3.10e-03	5.7	5.7	2.5	2.5	-4.6	0.9	-1.6	-8.49e-03	-2.35e-02	3.78e-02
4386	ok	0.24	0.3	0.0	5.7	5.7	2.5	2.5	42.7	33.9	-23.3	-2.04e-02	2.87e-02	-2.52e-03
4415	ok	0.24	0.4	0.1	5.7	5.7	2.5	2.5	-214.3	-75.6	-32.2	-8.3	-2.0	0.4
4444	ok	0.24	0.4	1.42e-02	5.7	5.7	2.5	2.5	33.9	5.5	15.4	-2.8	-0.5	-0.2
4473	ok	0.24	0.1	4.89e-03	5.7	5.7	2.5	2.5	-7.9	-4.0	4.5	-1.7	-0.3	-3.59e-02
4502	ok	0.24	4.76e-02	4.12e-03	5.7	5.7	2.5	2.5	-3.8	2.3	-3.4	0.5	0.1	-7.74e-02
4540	ok	0.24	3.67e-02	2.72e-03	5.7	5.7	2.5	2.5	-0.5	4.72e-06	-1.6	-0.3	-9.16e-03	-0.1
4716	ok	0.24	0.4	0.1	5.7	5.7	2.5	2.5	-220.0	-44.1	-52.0	-8.3	-1.7	-0.2
4775	ok	0.24	0.5	1.68e-02	5.7	5.7	2.5	2.5	33.9	18.0	-1.3	-2.9	-0.7	-0.3
4834	ok	0.24	0.2	8.20e-03	5.7	5.7	2.5	2.5	-5.7	2.0	14.7	-1.8	-0.4	-0.1
4893	ok	0.24	5.10e-02	5.37e-03	5.7	5.7	2.5	2.5	-5.2	1.6	-4.9	0.4	0.2	8.83e-02
4952	ok	0.24	2.88e-02	1.92e-03	5.7	5.7	2.5	2.5	0.4	2.5	-1.8	-0.3	6.75e-02	-5.18e-03

Nodo	**x/d**	**V N/M**	**ver. rid**	**Af pr-**	**Af pr+**	**Af sec-**	**Af sec+**	**N z**	**N o**	**N zo**	**M z**	**M o**	**M zo**
								-518.25	-90.48	-52.05	-8.30	-1.98	-0.32
	0.24	0.81	0.22	5.65	5.65	2.51	2.51	42.68	33.85	128.17	3.76	0.84	0.42

Nodo	**Stato**	**Max tau** daN/cm2	**Ver V pr**	**Ver V sec**	**Af V pr**	**Af V sec**	**V pr** kN/ m	**V sec** kN/ m
374	ok	1.83						
433	ok	1.48						
492	ok	0.96						
551	ok	0.65						
610	ok	0.43						
669	ok	0.81						
783	ok	2.01						
812	ok	1.45						
841	ok	1.11						
870	ok	0.68						
899	ok	0.53						
937	ok	0.80						
991	ok	2.01						
1020	ok	1.33						
1049	ok	1.10						
1078	ok	0.65						
1107	ok	0.41						
1145	ok	0.49						
1208	ok	1.80						
1265	ok	1.34						
1322	ok	0.95						
1379	ok	0.65						
1436	ok	0.36						

1493	ok	0.48						
1547	ok	1.94						
1576	ok	1.36						
1605	ok	1.08						
1634	ok	0.67						
1663	ok	0.40						
1701	ok	0.40						
1755	ok	1.94						
1784	ok	1.35						
1813	ok	1.08						
1842	ok	0.66						
1871	ok	0.42						
1909	ok	0.43						
1972	ok	1.79						
2029	ok	1.35						
2086	ok	0.96						
2143	ok	0.65						
2200	ok	0.36						
2257	ok	0.43						
2311	ok	1.95						
2340	ok	1.37						
2369	ok	1.08						
2398	ok	0.67						
2427	ok	0.40						
2465	ok	0.39						
2519	ok	1.95						
2548	ok	1.36						
2577	ok	1.08						
2606	ok	0.65						
2635	ok	0.42						
2673	ok	0.41						
2736	ok	1.89						
2793	ok	1.38						
2850	ok	0.97						
2907	ok	0.66						
2964	ok	0.36						
3021	ok	0.41						
3075	ok	2.04						
3104	ok	1.40						
3133	ok	1.09						
3162	ok	0.69						
3191	ok	0.39						
3229	ok	0.42						
3283	ok	2.04						
3312	ok	1.35						
3341	ok	1.09						
3370	ok	0.68						
3399	ok	0.45						
3437	ok	0.43						
3506	ok	2.00						
3563	ok	2.06						
3620	ok	1.76						
3677	ok	0.78						
3734	ok	0.39						
3791	ok	0.46						
3875	ok	0.84						
3904	ok	2.61						
3933	ok	1.76						
3962	ok	0.79						
3991	ok	0.37						
4029	ok	0.46						
4386	ok	1.09						
4415	ok Av	6.69	0.30	0.04	7.6	0.9	73.2	9.0
4444	ok	1.78						
4473	ok	1.03						
4502	ok	0.40						
4540	ok	0.71						
4716	ok Av	6.96	0.30	0.09	7.6	2.3	73.3	22.2
4775	ok	1.21						
4834	ok	0.97						
4893	ok	0.33						
4952	ok	0.74						
Nodo		**Max tau**	**Ver V pr**	**Ver V sec**	**Af V pr**	**Af V sec**	**V pr**	**V sec**
		6.96	0.30	0.09	7.57	2.29	73.32	22.20

Macro Setto	Spessore	Id Materiale	Id Criterio	Progettazione
	cm			
16	15.00	1	1	Singolo elemento NON DISSIPATIVO

Nodo	Stato	x/d	V N/M	ver. rid	Af pr-	Af pr+	Af sec-	Af sec+	N z	N o	N zo	M z	M o	M zo
									kN/ m	kN/ m	kN/ m	kN	kN	kN
376	ok	0.24	0.6	0.2	5.7	5.7	2.5	2.5	-483.5	-84.6	118.9	-9.93e-02	-4.62e-02	-4.52e-02
435	ok	0.24	0.5	4.49e-02	5.7	5.7	2.5	2.5	-89.1	-23.3	5.8	3.8	0.8	-8.13e-02
494	ok	0.24	0.2	3.06e-02	5.7	5.7	2.5	2.5	-69.1	-19.7	-19.9	2.8	0.7	-5.01e-02
553	ok	0.24	0.2	2.31e-02	5.7	5.7	2.5	2.5	-54.4	-10.3	12.7	1.8	0.4	-7.56e-02
612	ok	0.24	0.1	2.29e-02	5.7	5.7	2.5	2.5	-41.9	-9.4	-5.7	0.9	0.2	-6.97e-02
671	ok	0.24	5.14e-02	3.09e-02	5.7	5.7	2.5	2.5	-54.1	-15.1	-18.9	8.82e-02	-3.05e-02	-3.71e-02
784	ok	0.24	0.8	0.2	5.7	5.7	2.5	2.5	-416.2	-57.2	75.9	-0.4	-9.00e-02	-1.23e-02
813	ok	0.24	0.5	5.01e-02	5.7	5.7	2.5	2.5	-85.1	11.8	-1.0	3.6	0.8	0.2
842	ok	0.24	0.2	2.89e-02	5.7	5.7	2.5	2.5	-67.0	20.7	-6.3	2.7	0.6	0.2
871	ok	0.24	0.1	2.20e-02	5.7	5.7	2.5	2.5	-55.4	-8.3	0.2	1.7	0.4	0.2
900	ok	0.24	6.07e-02	2.08e-02	5.7	5.7	2.5	2.5	-40.0	-5.1	5.3	0.8	0.2	0.2
939	ok	0.24	6.93e-02	2.52e-02	5.7	5.7	2.5	2.5	-52.5	-12.9	-10.8	1.62e-02	-0.1	0.2
992	ok	0.24	0.3	0.1	5.7	5.7	2.5	2.5	-243.4	-29.8	43.9	-0.1	-3.03e-02	-3.62e-02
1021	ok	0.24	0.2	4.34e-02	5.7	5.7	2.5	2.5	-82.8	-39.2	40.0	0.3	6.51e-02	-1.84e-02
1050	ok	0.24	0.2	3.04e-02	5.7	5.7	2.5	2.5	-46.5	8.1	-9.1	-2.0	-0.4	0.3
1079	ok	0.24	0.1	2.19e-02	5.7	5.7	2.5	2.5	-50.0	-3.8	-7.5	-1.3	-0.3	0.3
1108	ok	0.24	6.17e-02	2.13e-02	5.7	5.7	2.5	2.5	-45.4	-0.7	-10.2	-0.6	-0.1	0.3
1147	ok	0.24	6.22e-02	1.96e-02	5.7	5.7	2.5	2.5	-48.4	0.4	-2.4	-1.30e-03	-3.22e-03	0.3
1210	ok	0.24	0.3	6.39e-02	5.7	5.7	2.5	2.5	-157.0	-22.2	21.1	0.2	5.62e-02	-5.24e-03
1267	ok	0.24	0.2	3.94e-02	5.7	5.7	2.5	2.5	-81.3	-21.0	35.2	0.1	3.14e-02	-8.44e-03
1324	ok	0.24	0.1	2.55e-02	5.7	5.7	2.5	2.5	-53.6	-0.4	-9.4	-2.1	-0.4	8.81e-02
1381	ok	0.24	6.36e-02	2.17e-02	5.7	5.7	2.5	2.5	-52.3	-0.3	-10.9	-1.3	-0.3	0.1
1438	ok	0.24	4.67e-02	2.09e-02	5.7	5.7	2.5	2.5	-39.4	-3.2	-11.8	0.6	0.1	8.79e-02
1495	ok	0.24	2.66e-02	1.89e-02	5.7	5.7	2.5	2.5	-45.3	-3.6	-6.2	0.1	1.89e-02	-1.70e-02
1548	ok	0.24	0.2	4.36e-02	5.7	5.7	2.5	2.5	-108.3	-4.3	11.2	-0.5	-9.06e-02	-1.45e-02
1577	ok	0.24	0.1	3.22e-02	5.7	5.7	2.5	2.5	-72.1	-13.6	23.1	-0.3	-7.53e-02	-3.14e-02
1606	ok	0.24	0.1	2.18e-02	5.7	5.7	2.5	2.5	-29.7	-9.5	23.0	-0.2	-5.47e-02	-2.57e-02
1635	ok	0.24	6.55e-02	1.81e-02	5.7	5.7	2.5	2.5	-41.5	-1.1	-8.7	1.3	0.3	0.3
1664	ok	0.24	3.80e-02	1.74e-02	5.7	5.7	2.5	2.5	-40.2	0.2	-10.2	0.6	0.1	0.3
1703	ok	0.24	2.23e-02	1.77e-02	5.7	5.7	2.5	2.5	-40.4	2.88e-02	-8.5	2.38e-03	-1.07e-02	0.3
1756	ok	0.24	0.2	3.59e-02	5.7	5.7	2.5	2.5	-76.2	-3.28e-02	6.7	0.4	9.00e-02	-1.41e-02
1785	ok	0.24	0.1	2.91e-02	5.7	5.7	2.5	2.5	-61.0	-8.7	17.3	0.3	7.88e-02	-3.23e-02
1814	ok	0.24	0.1	2.20e-02	5.7	5.7	2.5	2.5	-37.2	-7.0	18.5	0.2	5.81e-02	-2.60e-02
1843	ok	0.24	7.24e-02	1.78e-02	5.7	5.7	2.5	2.5	-33.4	-0.4	-12.1	-1.3	-0.3	0.3
1872	ok	0.24	5.22e-02	1.67e-02	5.7	5.7	2.5	2.5	-35.1	-0.7	-9.7	-0.6	-9.22e-02	0.2
1911	ok	0.24	3.07e-02	1.60e-02	5.7	5.7	2.5	2.5	-35.7	0.7	-7.8	-2.62e-02	4.01e-02	0.3
1974	ok	0.24	0.2	3.24e-02	5.7	5.7	2.5	2.5	-64.0	-5.9	6.4	-0.3	-7.33e-02	-8.72e-03
2031	ok	0.24	0.1	2.57e-02	5.7	5.7	2.5	2.5	-60.0	-9.0	14.7	0.2	4.74e-02	-1.46e-02
2088	ok	0.24	9.80e-02	2.19e-02	5.7	5.7	2.5	2.5	-37.6	-5.7	20.1	0.2	3.02e-02	-8.60e-03
2145	ok	0.24	6.97e-02	1.81e-02	5.7	5.7	2.5	2.5	-24.4	-0.7	-13.3	1.4	0.3	8.73e-02
2202	ok	0.24	4.90e-02	1.58e-02	5.7	5.7	2.5	2.5	-36.1	-2.7	-10.3	-0.6	-0.1	7.86e-02
2259	ok	0.24	3.48e-02	1.42e-02	5.7	5.7	2.5	2.5	-32.6	-2.7	-8.1	4.58e-02	1.35e-02	0.1
2312	ok	0.24	0.2	2.38e-02	5.7	5.7	2.5	2.5	-59.5	-0.3	4.1	-0.5	-9.02e-02	-1.45e-02
2341	ok	0.24	0.1	2.24e-02	5.7	5.7	2.5	2.5	-48.1	-4.5	11.9	-0.4	-7.86e-02	-3.15e-02
2370	ok	0.24	0.1	1.78e-02	5.7	5.7	2.5	2.5	-32.4	-3.3	13.2	-0.3	-5.90e-02	-2.58e-02
2399	ok	0.24	7.70e-02	1.41e-02	5.7	5.7	2.5	2.5	-25.5	-1.2	-11.4	1.3	0.3	0.3
2428	ok	0.24	5.66e-02	1.31e-02	5.7	5.7	2.5	2.5	-28.2	-1.7	-11.5	0.6	0.1	0.3
2467	ok	0.24	4.57e-02	1.33e-02	5.7	5.7	2.5	2.5	-26.8	0.3	-9.2	6.06e-03	-5.06e-03	0.3
2520	ok	0.24	0.2	2.27e-02	5.7	5.7	2.5	2.5	-45.4	1.3	3.0	-3.2	-0.5	0.2
2549	ok	0.24	0.2	2.07e-02	5.7	5.7	2.5	2.5	-40.3	-1.6	4.4	-2.5	-0.4	0.3
2578	ok	0.24	0.1	1.72e-02	5.7	5.7	2.5	2.5	-29.2	-2.1	11.6	0.2	5.50e-02	-2.24e-02
2607	ok	0.24	8.10e-02	1.40e-02	5.7	5.7	2.5	2.5	-22.4	-3.6	10.2	-1.2	-0.3	0.3
2636	ok	0.24	4.99e-02	1.22e-02	5.7	5.7	2.5	2.5	-9.9	-1.7	10.4	-0.6	-0.1	0.3
2675	ok	0.24	4.84e-02	1.13e-02	5.7	5.7	2.5	2.5	-21.8	0.6	-7.8	-1.48e-02	4.82e-02	0.3
2738	ok	0.24	0.2	2.43e-02	5.7	5.7	2.5	2.5	-36.5	-2.5	2.9	3.5	0.7	3.53e-02
2795	ok	0.24	0.2	1.93e-02	5.7	5.7	2.5	2.5	-29.0	-2.4	6.6	2.7	0.6	0.1
2852	ok	0.24	0.1	1.68e-02	5.7	5.7	2.5	2.5	-22.5	-1.7	9.7	2.0	0.4	8.42e-02
2909	ok	0.24	7.83e-02	1.38e-02	5.7	5.7	2.5	2.5	-23.6	-2.4	-12.7	-1.4	-0.3	9.00e-02
2966	ok	0.24	5.43e-02	1.15e-02	5.7	5.7	2.5	2.5	-15.1	-1.1	-9.2	0.6	0.1	9.46e-02
3023	ok	0.24	4.36e-02	9.23e-03	5.7	5.7	2.5	2.5	-21.3	-2.2	-6.0	-5.75e-02	1.55e-02	0.1
3076	ok	0.24	0.2	1.57e-02	5.7	5.7	2.5	2.5	-33.0	0.5	1.8	3.3	0.5	0.2
3105	ok	0.24	0.2	1.58e-02	5.7	5.7	2.5	2.5	-30.0	-0.4	7.1	2.6	0.6	0.3
3134	ok	0.24	0.1	1.24e-02	5.7	5.7	2.5	2.5	-23.0	-1.1	8.0	1.9	0.4	0.3
3163	ok	0.24	9.04e-02	9.29e-03	5.7	5.7	2.5	2.5	-12.7	-1.4	-8.5	1.3	0.3	0.3
3192	ok	0.24	6.05e-02	8.03e-03	5.7	5.7	2.5	2.5	-16.4	-1.9	-7.9	0.6	0.1	0.3
3231	ok	0.24	4.22e-02	7.81e-03	5.7	5.7	2.5	2.5	-14.2	5.84e-02	-5.9	6.77e-03	6.08e-03	0.3
3284	ok	0.24	0.2	1.38e-02	5.7	5.7	2.5	2.5	-23.5	-0.5	-3.5	-4.0	-0.6	0.1
3313	ok	0.24	0.2	1.50e-02	5.7	5.7	2.5	2.5	-23.8	-1.4	-7.5	-2.9	-0.6	0.2
3342	ok	0.24	0.1	1.17e-02	5.7	5.7	2.5	2.5	-12.8	-2.1	-7.1	-2.0	-0.4	0.3

3371	ok	0.24	9.14e-02	8.65e-03	5.7	5.7	2.5	2.5	-12.8	-1.9	7.6	0.2	3.35e-02	-2.99e-02
3400	ok	0.24	5.34e-02	7.13e-03	5.7	5.7	2.5	2.5	-14.8	5.91e-02	-7.2	-4.97e-03	4.94e-02	0.3
3439	ok	0.24	4.35e-02	6.21e-03	5.7	5.7	2.5	2.5	-13.5	0.5	-5.6	1.15e-02	6.68e-02	0.3
3508	ok	0.24	0.2	1.20e-02	5.7	5.7	2.5	2.5	-23.7	-2.8	-3.5	-0.4	-4.75e-02	-2.57e-02
3565	ok	0.24	0.2	1.57e-02	5.7	5.7	2.5	2.5	-25.9	-2.3	-9.9	-3.0	-0.7	-9.08e-03
3622	ok	0.24	0.1	1.05e-02	5.7	5.7	2.5	2.5	-11.8	-3.1	-6.5	-2.1	-0.5	3.97e-02
3679	ok	0.24	8.19e-02	8.51e-03	5.7	5.7	2.5	2.5	-6.0	-0.9	3.4	1.0	0.2	0.1
3736	ok	0.24	4.46e-02	7.55e-03	5.7	5.7	2.5	2.5	-14.0	-1.4	-6.6	-0.7	-0.1	9.04e-02
3793	ok	0.24	3.67e-02	4.38e-03	5.7	5.7	2.5	2.5	-6.8	1.1	-1.2	0.2	4.61e-03	-9.13e-02
3876	ok	0.24	0.1	1.12e-02	5.7	5.7	2.5	2.5	5.7	-19.9	0.5	7.10e-02	-5.35e-04	-3.30e-02
3905	ok	0.24	0.2	1.92e-02	5.7	5.7	2.5	2.5	-38.9	3.3	-14.0	-1.1	-0.6	0.2
3934	ok	0.24	0.1	1.23e-02	5.7	5.7	2.5	2.5	12.2	-11.0	-15.3	-1.5	-0.6	0.2
3963	ok	0.24	0.1	5.26e-03	5.7	5.7	2.5	2.5	-6.7	-1.7	5.6	0.9	0.2	0.2
3992	ok	0.24	4.83e-02	3.87e-03	5.7	5.7	2.5	2.5	-6.4	0.6	-3.3	-0.3	-3.98e-02	-0.1
4031	ok	0.24	2.68e-02	2.97e-03	5.7	5.7	2.5	2.5	-6.0	0.8	-2.1	0.2	1.80e-02	-0.2
4387	ok	0.24	0.2	0.0	5.7	5.7	2.5	2.5	25.1	21.9	-14.6	-7.84e-02	2.23e-02	1.60e-02
4416	ok	0.24	0.5	6.17e-02	5.7	5.7	2.5	2.5	-132.3	-48.7	-18.7	-7.4	-1.8	0.5
4445	ok	0.24	0.3	1.24e-02	5.7	5.7	2.5	2.5	80.8	6.7	-7.6	-2.8	-0.9	1.61e-02
4474	ok	0.24	0.1	5.53e-03	5.7	5.7	2.5	2.5	-10.6	-2.7	5.8	-1.8	-0.3	-3.37e-02
4503	ok	0.24	4.73e-02	4.01e-03	5.7	5.7	2.5	2.5	-3.9	2.0	-3.4	0.4	0.1	-8.17e-02
4542	ok	0.24	3.64e-02	2.44e-03	5.7	5.7	2.5	2.5	-0.5	-0.2	-1.4	-0.4	-7.60e-03	-0.1
4718	ok	0.24	0.5	6.54e-02	5.7	5.7	2.5	2.5	-133.5	-24.5	-30.3	-7.3	-1.6	5.13e-03
4777	ok	0.24	0.4	1.39e-02	5.7	5.7	2.5	2.5	84.3	15.9	8.9	-2.9	-0.8	-0.3
4836	ok	0.24	0.2	7.67e-03	5.7	5.7	2.5	2.5	-9.9	1.3	12.1	-1.9	-0.4	-0.2
4895	ok	0.24	4.92e-02	5.16e-03	5.7	5.7	2.5	2.5	-5.3	1.3	-4.6	0.4	0.2	8.28e-02
4954	ok	0.24	2.86e-02	1.64e-03	5.7	5.7	2.5	2.5	0.5	2.5	-1.5	-0.3	6.74e-02	-7.19e-03

Nodo	**x/d**	**V N/M**	**ver. rid**	**Af pr-**	**Af pr+**	**Af sec-**	**Af sec+**	**N z**	**N o**	**N zo**	**M z**	**M o**	**M zo**
								-483.45	-84.56	-30.25	-7.40	-1.83	-0.34
	0.24	0.82	0.21	5.65	5.65	2.51	2.51	84.35	21.87	118.91	3.76	0.84	0.49

Nodo	**Stato**	**Max tau** daN/cm2	**Ver V pr**	**Ver V sec**	**Af V pr**	**Af V sec**	**V pr** kN/ m	**V sec** kN/ m
376	ok	1.84						
435	ok	1.48						
494	ok	0.96						
553	ok	0.65						
612	ok	0.44						
671	ok	0.81						
784	ok	2.02						
813	ok	1.45						
842	ok	1.11						
871	ok	0.68						
900	ok	0.53						
939	ok	0.81						
992	ok	2.02						
1021	ok	1.34						
1050	ok	1.10						
1079	ok	0.66						
1108	ok	0.41						
1147	ok	0.49						
1210	ok	1.81						
1267	ok	1.36						
1324	ok	0.95						
1381	ok	0.65						
1438	ok	0.36						
1495	ok	0.48						
1548	ok	1.96						
1577	ok	1.38						
1606	ok	1.09						
1635	ok	0.68						
1664	ok	0.40						
1703	ok	0.40						
1756	ok	1.96						
1785	ok	1.37						
1814	ok	1.09						
1843	ok	0.66						
1872	ok	0.42						
1911	ok	0.44						
1974	ok	1.81						
2031	ok	1.36						
2088	ok	0.95						
2145	ok	0.65						
2202	ok	0.36						
2259	ok	0.43						
2312	ok	1.96						
2341	ok	1.38						

2370	ok	1.09						
2399	ok	0.68						
2428	ok	0.40						
2467	ok	0.39						
2520	ok	1.96						
2549	ok	1.37						
2578	ok	1.09						
2607	ok	0.66						
2636	ok	0.42						
2675	ok	0.42						
2738	ok	1.95						
2795	ok	1.41						
2852	ok	0.98						
2909	ok	0.66						
2966	ok	0.36						
3023	ok	0.41						
3076	ok	2.10						
3105	ok	1.43						
3134	ok	1.10						
3163	ok	0.69						
3192	ok	0.39						
3231	ok	0.42						
3284	ok	2.10						
3313	ok	1.41						
3342	ok	1.11						
3371	ok	0.68						
3400	ok	0.45						
3439	ok	0.41						
3508	ok	2.06						
3565	ok	2.06						
3622	ok	1.75						
3679	ok	0.78						
3736	ok	0.40						
3793	ok	0.46						
3876	ok	0.85						
3905	ok	2.62						
3934	ok	1.75						
3963	ok	0.79						
3992	ok	0.38						
4031	ok	0.46						
4387	ok	1.12						
4416	ok Av	6.77	0.31	0.04	7.6	1.0	73.8	9.7
4445	ok	1.78						
4474	ok	1.04						
4503	ok	0.41						
4542	ok	0.72						
4718	ok Av	6.98	0.31	0.10	7.6	2.4	73.8	23.5
4777	ok	1.28						
4836	ok	0.98						
4895	ok	0.32						
4954	ok	0.75						
Nodo		**Max tau**	**Ver V pr**	**Ver V sec**	**Af V pr**	**Af V sec**	**V pr**	**V sec**
		6.98	0.31	0.10	7.62	2.43	73.81	23.52

Macro Setto	Spessore	Id Materiale	Id Criterio	Progettazione
	cm			
17	15.00	1	1	Singolo elemento NON DISSIPATIVO

Nodo	Stato	x/d	V N/M	ver. rid	Af pr-	Af pr+	Af sec-	Af sec+	N z	N o	N zo	M z	M o	M zo
									kN/ m	kN/ m	kN/ m	kN	kN	kN
380	ok	0.24	0.5	0.2	5.7	5.7	2.5	2.5	-474.2	-82.7	116.6	-0.7	-9.79e-02	4.33e-02
439	ok	0.24	0.5	4.33e-02	5.7	5.7	2.5	2.5	-87.4	-22.6	6.1	3.6	0.8	-6.15e-02
498	ok	0.24	0.2	3.00e-02	5.7	5.7	2.5	2.5	-67.6	-19.1	-19.7	2.7	0.6	-4.61e-02
557	ok	0.24	0.2	2.31e-02	5.7	5.7	2.5	2.5	-53.5	-10.2	12.6	1.7	0.4	-7.03e-02
616	ok	0.24	0.1	2.29e-02	5.7	5.7	2.5	2.5	-41.5	-9.3	-5.8	0.8	0.2	-6.59e-02
675	ok	0.24	5.07e-02	3.09e-02	5.7	5.7	2.5	2.5	-45.9	-14.1	-26.4	1.36e-02	-7.95e-03	-2.93e-03
786	ok	0.24	0.8	0.2	5.7	5.7	2.5	2.5	-406.6	-55.2	73.4	-0.6	-9.98e-02	-3.14e-02
815	ok	0.24	0.5	4.85e-02	5.7	5.7	2.5	2.5	-83.8	10.5	-0.7	3.5	0.8	0.2
844	ok	0.24	0.2	2.84e-02	5.7	5.7	2.5	2.5	-65.8	19.4	-6.1	2.6	0.6	0.2
873	ok	0.24	0.1	2.17e-02	5.7	5.7	2.5	2.5	-54.6	-8.3	7.70e-02	1.7	0.3	0.2
902	ok	0.24	5.93e-02	2.09e-02	5.7	5.7	2.5	2.5	-39.7	-5.1	5.1	0.8	0.2	0.2
943	ok	0.24	7.03e-02	2.52e-02	5.7	5.7	2.5	2.5	-52.0	-8.5	-7.4	-1.29e-03	-6.16e-02	0.3

994	ok	0.24	0.3	9.86e-02	5.7	5.7	2.5	2.5	-238.6	-28.9	42.4	-0.1	-3.02e-02	-7.09e-02
1023	ok	0.24	0.2	4.26e-02	5.7	5.7	2.5	2.5	-82.0	-38.3	38.7	0.3	7.19e-02	-4.89e-02
1052	ok	0.24	0.2	2.99e-02	5.7	5.7	2.5	2.5	-46.3	7.3	-8.8	-1.9	-0.4	0.3
1081	ok	0.24	0.1	2.17e-02	5.7	5.7	2.5	2.5	-49.4	-4.0	-7.7	-1.2	-0.3	0.3
1110	ok	0.24	6.26e-02	2.14e-02	5.7	5.7	2.5	2.5	-45.1	-1.0	-10.4	-0.6	-0.1	0.3
1151	ok	0.24	6.23e-02	1.97e-02	5.7	5.7	2.5	2.5	-48.5	-1.6	-3.8	-3.39e-02	-3.92e-03	0.3
1214	ok	0.24	0.3	6.29e-02	5.7	5.7	2.5	2.5	-154.9	-21.8	20.1	0.4	7.79e-02	-1.92e-02
1271	ok	0.24	0.2	3.87e-02	5.7	5.7	2.5	2.5	-80.5	-20.6	33.9	0.3	5.75e-02	-2.12e-02
1328	ok	0.24	0.1	2.52e-02	5.7	5.7	2.5	2.5	-53.3	-0.8	-9.1	-2.0	-0.4	9.16e-02
1385	ok	0.24	6.25e-02	2.15e-02	5.7	5.7	2.5	2.5	-52.6	-3.7	-7.9	-1.3	-0.3	0.1
1442	ok	0.24	4.66e-02	2.09e-02	5.7	5.7	2.5	2.5	-47.0	-1.2	-7.0	-0.6	-0.1	0.1
1499	ok	0.24	2.54e-02	1.87e-02	5.7	5.7	2.5	2.5	-45.5	-3.5	-6.7	8.92e-02	2.30e-02	-1.16e-02
1550	ok	0.24	0.2	4.31e-02	5.7	5.7	2.5	2.5	-107.2	-4.1	10.6	-0.4	-7.46e-02	-2.18e-02
1579	ok	0.24	0.1	3.18e-02	5.7	5.7	2.5	2.5	-71.6	-13.4	22.2	-0.3	-7.50e-02	-3.66e-02
1608	ok	0.24	0.1	2.19e-02	5.7	5.7	2.5	2.5	-29.6	-9.4	22.1	-0.2	-5.63e-02	-3.14e-02
1637	ok	0.24	6.46e-02	1.79e-02	5.7	5.7	2.5	2.5	-40.9	-1.2	-8.5	1.2	0.3	0.3
1666	ok	0.24	3.74e-02	1.72e-02	5.7	5.7	2.5	2.5	-39.8	0.1	-10.0	0.6	0.1	0.3
1707	ok	0.24	2.24e-02	1.76e-02	5.7	5.7	2.5	2.5	-40.2	2.60e-02	-8.5	2.47e-04	2.26e-04	0.3
1758	ok	0.24	0.2	3.56e-02	5.7	5.7	2.5	2.5	-75.9	-1.90e-02	6.5	0.4	7.37e-02	-2.28e-02
1787	ok	0.24	0.1	2.88e-02	5.7	5.7	2.5	2.5	-60.7	-8.6	16.6	0.3	7.00e-02	-3.51e-02
1816	ok	0.24	9.98e-02	2.20e-02	5.7	5.7	2.5	2.5	-37.1	-6.9	17.7	0.2	5.07e-02	-3.08e-02
1845	ok	0.24	6.96e-02	1.79e-02	5.7	5.7	2.5	2.5	-33.1	-0.5	-11.9	-1.2	-0.3	0.3
1874	ok	0.24	5.00e-02	1.66e-02	5.7	5.7	2.5	2.5	-34.4	0.2	-12.8	-0.6	-0.1	0.2
1915	ok	0.24	2.95e-02	1.59e-02	5.7	5.7	2.5	2.5	-35.8	0.7	-7.8	-1.86e-02	3.62e-02	0.2
1978	ok	0.24	0.2	3.24e-02	5.7	5.7	2.5	2.5	-63.9	-5.9	6.3	-0.4	-7.89e-02	-7.72e-03
2035	ok	0.24	0.1	2.58e-02	5.7	5.7	2.5	2.5	-48.5	-6.6	10.9	-0.3	-6.09e-02	-1.65e-02
2092	ok	0.24	9.96e-02	2.20e-02	5.7	5.7	2.5	2.5	-31.7	-4.6	14.5	-0.2	-4.36e-02	-1.08e-02
2149	ok	0.24	6.92e-02	1.82e-02	5.7	5.7	2.5	2.5	-24.0	-0.7	-13.3	1.3	0.3	9.26e-02
2206	ok	0.24	5.02e-02	1.58e-02	5.7	5.7	2.5	2.5	-36.3	-3.7	-10.1	-0.6	-0.1	9.07e-02
2263	ok	0.24	3.33e-02	1.43e-02	5.7	5.7	2.5	2.5	-32.8	-2.7	-8.2	1.05e-02	7.69e-03	0.1
2314	ok	0.24	0.2	2.37e-02	5.7	5.7	2.5	2.5	-51.9	0.6	3.6	3.21e-02	0.1	-0.4
2343	ok	0.24	0.1	2.24e-02	5.7	5.7	2.5	2.5	-48.0	-4.5	11.7	-0.3	-7.53e-02	-3.51e-02
2372	ok	0.24	0.1	1.78e-02	5.7	5.7	2.5	2.5	-30.3	-3.0	12.5	1.23e-02	-5.38e-02	-0.3
2401	ok	0.24	7.83e-02	1.42e-02	5.7	5.7	2.5	2.5	-25.1	-1.1	-11.4	1.3	0.3	0.3
2430	ok	0.24	5.67e-02	1.30e-02	5.7	5.7	2.5	2.5	-27.9	-1.6	-11.5	0.6	0.1	0.3
2471	ok	0.24	4.50e-02	1.34e-02	5.7	5.7	2.5	2.5	-26.9	0.2	-9.3	-5.17e-03	-4.06e-03	0.3
2522	ok	0.24	0.2	2.27e-02	5.7	5.7	2.5	2.5	-44.3	1.4	3.3	3.1	0.5	-0.2
2551	ok	0.24	0.2	2.08e-02	5.7	5.7	2.5	2.5	-39.0	-2.7	9.7	2.5	0.6	-0.3
2580	ok	0.24	0.1	1.73e-02	5.7	5.7	2.5	2.5	-28.8	-2.0	11.5	1.9	0.4	-0.2
2609	ok	0.24	7.86e-02	1.40e-02	5.7	5.7	2.5	2.5	-22.6	-1.1	-11.4	-1.3	-0.3	0.3
2638	ok	0.24	4.91e-02	1.22e-02	5.7	5.7	2.5	2.5	-22.8	-0.9	-11.2	-0.6	-0.1	0.3
2679	ok	0.24	4.85e-02	1.14e-02	5.7	5.7	2.5	2.5	-21.9	0.8	-7.8	-1.52e-02	4.53e-02	0.3
2742	ok	0.24	0.2	2.43e-02	5.7	5.7	2.5	2.5	-35.4	-2.7	3.0	-3.3	-0.7	-4.45e-02
2799	ok	0.24	0.2	1.93e-02	5.7	5.7	2.5	2.5	-29.3	-2.6	6.0	-2.6	-0.5	-0.1
2856	ok	0.24	0.1	1.68e-02	5.7	5.7	2.5	2.5	-22.2	-1.8	9.9	-1.9	-0.4	-8.22e-02
2913	ok	0.24	8.17e-02	1.39e-02	5.7	5.7	2.5	2.5	-23.3	-2.3	-12.7	-1.3	-0.3	9.62e-02
2970	ok	0.24	5.63e-02	1.16e-02	5.7	5.7	2.5	2.5	-23.6	-2.6	-9.0	-0.6	-0.1	8.84e-02
3027	ok	0.24	4.21e-02	9.26e-03	5.7	5.7	2.5	2.5	-21.4	-2.0	-6.0	-2.37e-02	8.96e-03	0.1
3078	ok	0.24	0.2	1.57e-02	5.7	5.7	2.5	2.5	-31.8	0.6	2.0	-3.3	-0.6	-0.2
3107	ok	0.24	0.2	1.57e-02	5.7	5.7	2.5	2.5	-29.3	-0.4	7.3	-2.6	-0.6	-0.3
3136	ok	0.24	0.1	1.25e-02	5.7	5.7	2.5	2.5	-22.6	-1.1	8.2	-1.9	-0.4	-0.2
3165	ok	0.24	9.17e-02	9.36e-03	5.7	5.7	2.5	2.5	-12.5	-1.2	-8.5	-1.3	-0.2	-0.3
3194	ok	0.24	6.12e-02	7.91e-03	5.7	5.7	2.5	2.5	-16.0	-1.8	-7.9	-0.5	-0.1	-0.3
3235	ok	0.24	4.15e-02	7.76e-03	5.7	5.7	2.5	2.5	-14.5	9.33e-02	-5.8	-3.70e-03	-8.14e-04	0.3
3286	ok	0.24	0.2	1.37e-02	5.7	5.7	2.5	2.5	-27.8	-6.74e-02	-0.8	-9.62e-03	-4.34e-04	7.26e-03
3315	ok	0.24	0.2	1.50e-02	5.7	5.7	2.5	2.5	-23.2	-1.3	-7.3	2.8	0.6	-0.2
3344	ok	0.24	0.1	1.18e-02	5.7	5.7	2.5	2.5	-12.4	-2.0	-6.9	1.9	0.4	-0.2
3373	ok	0.24	9.30e-02	8.72e-03	5.7	5.7	2.5	2.5	-12.9	-1.9	7.5	0.1	2.46e-02	-3.12e-02
3402	ok	0.24	5.19e-02	7.19e-03	5.7	5.7	2.5	2.5	-12.4	1.0	-6.0	-0.6	-7.10e-02	0.2
3443	ok	0.24	4.37e-02	6.25e-03	5.7	5.7	2.5	2.5	-13.7	0.6	-5.5	3.93e-03	5.34e-02	0.3
3512	ok	0.24	0.3	1.20e-02	5.7	5.7	2.5	2.5	-23.6	-2.8	-3.5	-4.19e-02	-4.64e-03	3.32e-03
3569	ok	0.24	0.2	1.57e-02	5.7	5.7	2.5	2.5	-21.4	-1.6	-8.6	-2.2	-0.3	0.1
3626	ok	0.24	0.1	1.06e-02	5.7	5.7	2.5	2.5	-11.5	-3.0	-6.3	1.9	0.5	-3.41e-02
3683	ok	0.24	8.26e-02	8.57e-03	5.7	5.7	2.5	2.5	-6.4	-0.4	2.9	0.9	0.2	0.1
3740	ok	0.24	4.46e-02	7.62e-03	5.7	5.7	2.5	2.5	-14.1	-1.1	-6.6	-0.6	-9.85e-02	9.31e-02
3797	ok	0.24	3.55e-02	4.39e-03	5.7	5.7	2.5	2.5	-9.8	-0.5	-3.4	-1.15e-02	3.93e-02	0.1
3878	ok	0.24	0.1	1.11e-02	5.7	5.7	2.5	2.5	5.7	-19.8	0.5	-2.38e-03	-2.29e-04	1.19e-02
3907	ok	0.24	0.2	1.91e-02	5.7	5.7	2.5	2.5	-37.4	3.6	-13.9	1.2	0.5	-0.2
3936	ok	0.24	0.1	1.22e-02	5.7	5.7	2.5	2.5	11.4	-10.6	-15.1	1.4	0.6	-0.1
3965	ok	0.24	0.1	5.29e-03	5.7	5.7	2.5	2.5	-7.1	-1.5	5.1	0.9	0.2	0.2
3994	ok	0.24	4.67e-02	3.91e-03	5.7	5.7	2.5	2.5	-7.0	0.5	-3.0	0.3	4.24e-02	0.2
4035	ok	0.24	2.66e-02	3.03e-03	5.7	5.7	2.5	2.5	-4.6	0.8	-1.4	-1.11e-02	-3.93e-02	3.00e-02
4389	ok	0.24	0.2	0.0	5.7	5.7	2.5	2.5	24.9	21.7	-14.5	0.1	5.54e-02	-4.93e-02
4418	ok	0.24	0.5	6.11e-02	5.7	5.7	2.5	2.5	-127.9	-47.2	-18.5	7.0	1.7	-0.4
4447	ok	0.24	0.3	1.19e-02	5.7	5.7	2.5	2.5	78.3	6.9	-7.8	2.7	0.8	-2.40e-02
4476	ok	0.24	0.1	5.43e-03	5.7	5.7	2.5	2.5	-10.0	-2.3	5.1	1.7	0.3	3.36e-02
4505	ok	0.24	4.50e-02	4.05e-03	5.7	5.7	2.5	2.5	-4.1	1.9	-3.0	0.5	0.1	-7.32e-02
4546	ok	0.24	3.79e-02	2.30e-03	5.7	5.7	2.5	2.5	-1.5	-0.3	-0.9	-0.4	-1.89e-02	-0.2
4722	ok	0.24	0.5	6.47e-02	5.7	5.7	2.5	2.5	-129.2	-23.9	-29.8	6.7	1.5	-3.86e-02

4781	ok	0.24	0.4	1.31e-02	5.7	5.7	2.5	2.5	-31.4	-3.1	-6.6	-2.8	-0.6	-0.3
4840	ok	0.24	0.1	7.67e-03	5.7	5.7	2.5	2.5	-9.4	1.6	11.4	1.7	0.4	0.1
4899	ok	0.24	4.78e-02	5.18e-03	5.7	5.7	2.5	2.5	-7.5	0.4	5.4	-1.32e-02	-4.24e-03	2.27e-03
4958	ok	0.24	2.67e-02	1.16e-03	5.7	5.7	2.5	2.5	-0.6	2.3	-1.1	-0.3	7.08e-02	-1.73e-03

Nodo	**x/d**	**V N/M**	**ver. rid**	**Af pr-**	**Af pr+**	**Af sec-**	**Af sec+**	**N z**	**N o**	**N zo**	**M z**	**M o**	**M zo**
								-474.20	-82.72	-29.84	-3.29	-0.66	-0.40
	0.24	0.80	0.20	5.65	5.65	2.51	2.51	78.28	21.74	116.64	6.95	1.69	0.30

Nodo	**Stato**	**Max tau**	**Ver V pr**	**Ver V sec**	**Af V pr**	**Af V sec**	**V pr**	**V sec**
		daN/cm2					kN/ m	kN/ m
380	ok	1.80						
439	ok	1.47						
498	ok	0.96						
557	ok	0.64						
616	ok	0.43						
675	ok	0.80						
786	ok	1.98						
815	ok	1.42						
844	ok	1.10						
873	ok	0.68						
902	ok	0.52						
943	ok	0.83						
994	ok	1.98						
1023	ok	1.31						
1052	ok	1.10						
1081	ok	0.65						
1110	ok	0.41						
1151	ok	0.50						
1214	ok	1.80						
1271	ok	1.33						
1328	ok	0.94						
1385	ok	0.64						
1442	ok	0.35						
1499	ok	0.48						
1550	ok	1.95						
1579	ok	1.36						
1608	ok	1.07						
1637	ok	0.66						
1666	ok	0.40						
1707	ok	0.41						
1758	ok	1.95						
1787	ok	1.35						
1816	ok	1.07						
1845	ok	0.65						
1874	ok	0.41						
1915	ok	0.45						
1978	ok	1.81						
2035	ok	1.35						
2092	ok	0.95						
2149	ok	0.65						
2206	ok	0.35						
2263	ok	0.42						
2314	ok	1.96						
2343	ok	1.38						
2372	ok	1.08						
2401	ok	0.67						
2430	ok	0.39						
2471	ok	0.40						
2522	ok	1.96						
2551	ok	1.36						
2580	ok	1.08						
2609	ok	0.65						
2638	ok	0.41						
2679	ok	0.43						
2742	ok	1.93						
2799	ok	1.39						
2856	ok	0.97						
2913	ok	0.65						
2970	ok	0.37						
3027	ok	0.40						
3078	ok	2.07						
3107	ok	1.41						
3136	ok	1.09						
3165	ok	0.68						
3194	ok	0.39						
3235	ok	0.42						

3286	ok	2.07						
3315	ok	1.39						
3344	ok	1.10						
3373	ok	0.67						
3402	ok	0.44						
3443	ok	0.42						
3512	ok	2.04						
3569	ok	2.12						
3626	ok	1.76						
3683	ok	0.75						
3740	ok	0.40						
3797	ok	0.47						
3878	ok	0.87						
3907	ok	2.72						
3936	ok	1.76						
3965	ok	0.77						
3994	ok	0.37						
4035	ok	0.46						
4389	ok	1.13						
4418	ok Av	7.05	0.32	0.04	7.9	1.0	76.9	10.1
4447	ok	1.74						
4476	ok	1.01						
4505	ok	0.40						
4546	ok	0.73						
4722	ok Av	7.23	0.32	0.09	8.0	2.3	77.2	22.0
4781	ok	1.26						
4840	ok	0.96						
4899	ok	0.32						
4958	ok	0.76						
Nodo		**Max tau**	**Ver V pr**	**Ver V sec**	**Af V pr**	**Af V sec**	**V pr**	**V sec**
		7.23	0.32	0.09	7.97	2.27	77.23	22.02

Macro Setto	Spessore	Id Materiale	Id Criterio	Progettazione
	cm			
18	15.00	1	1	Singolo elemento NON DISSIPATIVO

Nodo	Stato	x/d	V N/M	ver. rid	Af pr-	Af pr+	Af sec-	Af sec+	N z	N o	N zo	M z	M o	M zo
									kN/ m	kN/ m	kN/ m	kN	kN	kN
382	ok	0.24	0.5	0.2	5.7	5.7	2.5	2.5	-502.8	-87.4	124.4	-0.7	-0.1	3.52e-02
441	ok	0.24	0.5	4.18e-02	5.7	5.7	2.5	2.5	-88.0	-22.8	7.4	3.6	0.8	-6.39e-02
500	ok	0.24	0.2	2.94e-02	5.7	5.7	2.5	2.5	-66.0	-18.9	-19.8	2.7	0.6	-4.58e-02
559	ok	0.24	0.2	2.26e-02	5.7	5.7	2.5	2.5	-52.9	-10.0	12.5	1.7	0.4	-7.11e-02
618	ok	0.24	0.1	2.26e-02	5.7	5.7	2.5	2.5	-41.0	-9.3	-5.7	0.8	0.2	-6.59e-02
677	ok	0.24	5.06e-02	3.07e-02	5.7	5.7	2.5	2.5	-45.7	-14.0	-26.2	-3.76e-03	-5.24e-03	-2.94e-04
787	ok	0.24	0.8	0.2	5.7	5.7	2.5	2.5	-423.1	-54.8	75.1	-0.7	-0.1	-3.52e-02
816	ok	0.24	0.5	5.27e-02	5.7	5.7	2.5	2.5	-84.7	8.5	1.3	3.6	0.8	0.2
845	ok	0.24	0.2	2.83e-02	5.7	5.7	2.5	2.5	-65.5	18.6	-5.7	2.6	0.6	0.2
874	ok	0.24	0.1	2.15e-02	5.7	5.7	2.5	2.5	-54.0	-8.6	0.2	1.7	0.3	0.2
903	ok	0.24	5.96e-02	2.06e-02	5.7	5.7	2.5	2.5	-39.1	-5.3	5.2	0.8	0.2	0.2
945	ok	0.24	7.02e-02	2.51e-02	5.7	5.7	2.5	2.5	-51.4	-8.3	-7.3	-1.87e-03	-5.74e-02	0.3
995	ok	0.24	0.3	0.1	5.7	5.7	2.5	2.5	-248.7	-29.0	43.2	-9.29e-02	-3.05e-02	-7.44e-02
1024	ok	0.24	0.2	4.50e-02	5.7	5.7	2.5	2.5	-86.3	-39.9	41.5	0.3	7.75e-02	-4.97e-02
1053	ok	0.24	0.2	2.98e-02	5.7	5.7	2.5	2.5	-69.1	1.6	0.7	0.3	9.22e-02	0.4
1082	ok	0.24	0.1	2.15e-02	5.7	5.7	2.5	2.5	-49.0	-4.5	-7.3	-1.2	-0.3	0.3
1111	ok	0.24	6.25e-02	2.10e-02	5.7	5.7	2.5	2.5	-44.4	-1.1	-10.3	-0.6	-0.1	0.3
1153	ok	0.24	6.15e-02	1.94e-02	5.7	5.7	2.5	2.5	-47.8	-1.6	-3.6	-3.72e-02	-2.23e-03	0.3
1216	ok	0.24	0.3	6.55e-02	5.7	5.7	2.5	2.5	-161.4	-22.2	20.5	0.5	8.93e-02	-1.32e-02
1273	ok	0.24	0.2	4.09e-02	5.7	5.7	2.5	2.5	-84.8	-21.4	36.2	0.3	6.62e-02	-1.84e-02
1330	ok	0.24	0.1	2.64e-02	5.7	5.7	2.5	2.5	-53.9	-1.2	-7.8	-0.3	-5.50e-02	1.38e-02
1387	ok	0.24	6.26e-02	2.14e-02	5.7	5.7	2.5	2.5	-52.6	-4.1	-7.3	-1.3	-0.3	0.1
1444	ok	0.24	4.59e-02	2.05e-02	5.7	5.7	2.5	2.5	-47.3	-4.4	-4.7	-0.6	-0.1	0.1
1501	ok	0.24	2.42e-02	1.83e-02	5.7	5.7	2.5	2.5	-44.8	-1.2	-6.6	1.52e-02	1.21e-02	0.1
1551	ok	0.24	0.2	4.51e-02	5.7	5.7	2.5	2.5	-112.1	-4.0	10.6	-0.5	-8.29e-02	-2.31e-02
1580	ok	0.24	0.1	3.33e-02	5.7	5.7	2.5	2.5	-75.3	-13.7	22.9	-0.4	-8.61e-02	-3.91e-02
1609	ok	0.24	0.1	2.33e-02	5.7	5.7	2.5	2.5	-31.1	-9.8	22.8	-0.3	-6.44e-02	-3.32e-02
1638	ok	0.24	6.52e-02	1.80e-02	5.7	5.7	2.5	2.5	-41.6	-1.4	-8.2	1.3	0.3	0.3
1667	ok	0.24	3.56e-02	1.69e-02	5.7	5.7	2.5	2.5	-39.1	-0.1	-9.8	0.6	0.1	0.2
1709	ok	0.24	2.39e-02	1.70e-02	5.7	5.7	2.5	2.5	-41.8	5.21e-02	-6.4	2.06e-02	2.95e-03	0.2
1759	ok	0.24	0.2	3.74e-02	5.7	5.7	2.5	2.5	-80.4	7.84e-02	6.5	0.5	8.15e-02	-2.55e-02
1788	ok	0.24	0.1	3.03e-02	5.7	5.7	2.5	2.5	-64.2	-8.7	17.2	0.4	7.95e-02	-3.86e-02
1817	ok	0.24	9.72e-02	2.36e-02	5.7	5.7	2.5	2.5	-39.2	-7.1	18.4	0.3	5.92e-02	-3.32e-02
1846	ok	0.24	6.78e-02	1.84e-02	5.7	5.7	2.5	2.5	-34.0	-0.6	-11.6	-1.3	-0.3	0.3

1875	ok	0.24	4.82e-02	1.63e-02	5.7	5.7	2.5	2.5	-33.8	-0.2	-12.5	-0.6	-0.1	0.2
1917	ok	0.24	3.46e-02	1.51e-02	5.7	5.7	2.5	2.5	-33.7	0.5	-6.7	-2.34e-02	3.54e-02	0.2
1980	ok	0.24	0.2	3.47e-02	5.7	5.7	2.5	2.5	-83.3	-9.3	0.7	0.4	8.89e-02	-5.90e-03
2037	ok	0.24	0.1	2.78e-02	5.7	5.7	2.5	2.5	-51.4	-6.7	11.2	-0.3	-7.28e-02	-1.63e-02
2094	ok	0.24	9.75e-02	2.36e-02	5.7	5.7	2.5	2.5	-34.0	-4.6	14.7	-0.3	-5.35e-02	-1.19e-02
2151	ok	0.24	6.66e-02	1.91e-02	5.7	5.7	2.5	2.5	-26.4	-1.0	-13.3	1.3	0.3	9.34e-02
2208	ok	0.24	4.70e-02	1.52e-02	5.7	5.7	2.5	2.5	-34.5	-4.1	-10.2	-0.6	-0.1	8.64e-02
2265	ok	0.24	3.83e-02	1.31e-02	5.7	5.7	2.5	2.5	-32.4	-3.4	-3.5	-2.77e-02	2.17e-03	0.1
2315	ok	0.24	0.2	2.58e-02	5.7	5.7	2.5	2.5	-62.6	-0.2	4.0	-0.4	-7.66e-02	-1.88e-02
2344	ok	0.24	0.1	2.46e-02	5.7	5.7	2.5	2.5	-50.8	-4.3	11.9	-0.4	-8.63e-02	-3.74e-02
2373	ok	0.24	0.1	1.95e-02	5.7	5.7	2.5	2.5	-34.7	-3.5	13.3	-0.3	-6.52e-02	-3.29e-02
2402	ok	0.24	7.72e-02	1.64e-02	5.7	5.7	2.5	2.5	-29.2	-1.1	-10.4	1.3	0.3	0.3
2431	ok	0.24	5.27e-02	1.36e-02	5.7	5.7	2.5	2.5	-27.7	-2.3	-13.6	0.6	0.1	0.3
2473	ok	0.24	6.68e-02	1.02e-02	5.7	5.7	2.5	2.5	-25.1	-3.4	-3.4	8.17e-03	8.38e-03	0.2
2523	ok	0.24	0.2	2.48e-02	5.7	5.7	2.5	2.5	-47.4	1.5	3.4	3.2	0.5	-0.2
2552	ok	0.24	0.2	2.28e-02	5.7	5.7	2.5	2.5	-42.3	-1.6	4.9	2.6	0.4	-0.3
2581	ok	0.24	0.1	1.89e-02	5.7	5.7	2.5	2.5	-30.9	-3.5	13.2	0.3	5.41e-02	-3.31e-02
2610	ok	0.24	6.74e-02	1.56e-02	5.7	5.7	2.5	2.5	-19.7	-7.3	-11.2	-0.2	-2.50e-02	3.68e-02
2639	ok	0.24	7.79e-02	2.09e-02	5.7	5.7	2.5	2.5	-43.5	-10.3	-18.4	-0.7	-0.1	0.3
2681	ok	0.24	0.1	6.20e-03	5.7	5.7	2.5	2.5	-11.8	6.1	2.0	1.05e-02	7.54e-03	3.96e-02
2744	ok	0.24	0.2	2.63e-02	5.7	5.7	2.5	2.5	-52.2	-5.0	-7.2	-9.18e-02	-1.56e-02	-3.77e-03
2801	ok	0.24	0.2	2.14e-02	5.7	5.7	2.5	2.5	-31.5	-2.7	6.5	-2.6	-0.5	-0.1
2858	ok	0.24	0.1	1.84e-02	5.7	5.7	2.5	2.5	-24.0	-2.6	7.0	2.0	0.4	7.29e-02
2915	ok	0.24	8.89e-02	1.52e-02	5.7	5.7	2.5	2.5	-17.4	-2.1	-18.2	-1.3	-0.3	8.99e-02
2972	ok	0.24	6.06e-02	1.98e-02	5.7	5.7	2.5	2.5	-40.8	-0.5	-8.4	-0.7	-0.2	0.1
3029	ok	0.24	3.62e-02	8.38e-03	5.7	5.7	2.5	2.5	-14.0	0.7	-11.9	-0.1	-2.36e-02	1.26e-02
3079	ok	0.24	0.2	1.79e-02	5.7	5.7	2.5	2.5	-36.2	1.5	-1.1	2.84e-02	-2.93e-03	7.86e-03
3108	ok	0.24	0.2	1.84e-02	5.7	5.7	2.5	2.5	-32.0	-1.0	7.9	-0.3	-8.16e-02	-3.66e-02
3137	ok	0.24	0.1	1.44e-02	5.7	5.7	2.5	2.5	-24.4	-1.4	7.9	-2.0	-0.5	-0.2
3166	ok	0.24	8.43e-02	1.10e-02	5.7	5.7	2.5	2.5	-17.0	-1.6	10.0	1.2	0.2	0.3
3195	ok	0.24	6.63e-02	6.77e-03	5.7	5.7	2.5	2.5	-6.3	-1.3	10.6	8.27e-03	-2.51e-03	0.3
3237	ok	0.24	3.70e-02	8.60e-03	5.7	5.7	2.5	2.5	-11.9	-0.8	-9.5	4.34e-03	-4.55e-03	-0.3
3287	ok	0.24	0.2	1.55e-02	5.7	5.7	2.5	2.5	-31.5	-3.19e-02	-0.3	-4.44e-02	-3.08e-03	5.01e-03
3316	ok	0.24	0.2	1.83e-02	5.7	5.7	2.5	2.5	-36.8	0.5	3.5	-3.56e-02	-1.15e-02	4.30e-03
3345	ok	0.24	0.1	1.38e-02	5.7	5.7	2.5	2.5	-26.4	-3.0	-3.4	-2.69e-02	-6.08e-03	5.03e-03
3374	ok	0.24	9.21e-02	9.02e-03	5.7	5.7	2.5	2.5	-14.0	-2.0	7.7	-1.3	-0.3	0.3
3403	ok	0.24	5.20e-02	6.59e-03	5.7	5.7	2.5	2.5	-9.8	-0.8	9.3	-0.6	-0.2	0.3
3445	ok	0.24	4.36e-02	6.41e-03	5.7	5.7	2.5	2.5	-12.4	-4.78e-02	-7.4	-8.81e-03	-5.04e-02	-0.3
3514	ok	0.24	0.2	1.24e-02	5.7	5.7	2.5	2.5	-24.8	-2.8	-2.4	-0.1	-1.83e-02	-1.09e-02
3571	ok	0.24	0.1	2.08e-02	5.7	5.7	2.5	2.5	-33.6	-1.5	-12.6	-2.1	-0.3	6.09e-02
3628	ok	0.24	0.1	1.23e-02	5.7	5.7	2.5	2.5	-4.4	-1.2	-13.6	-1.6	-0.2	-0.1
3685	ok	0.24	8.13e-02	8.32e-03	5.7	5.7	2.5	2.5	-13.0	-2.0	7.1	-1.3	-0.3	9.68e-02
3742	ok	0.24	4.41e-02	7.41e-03	5.7	5.7	2.5	2.5	-11.1	-0.4	11.0	-0.6	-0.1	8.54e-02
3799	ok	0.24	3.68e-02	4.35e-03	5.7	5.7	2.5	2.5	-0.3	0.6	7.2	-8.23e-02	2.12e-03	-1.43e-02
3879	ok	0.24	0.1	1.79e-02	5.7	5.7	2.5	2.5	10.8	-31.8	1.8	2.28e-02	-4.23e-04	-2.13e-03
3908	ok	0.24	0.2	3.01e-02	5.7	5.7	2.5	2.5	-54.8	18.1	16.4	8.81e-03	-1.61e-02	-2.58e-02
3937	ok	0.24	0.2	2.25e-02	5.7	5.7	2.5	2.5	19.0	-9.2	-1.9	1.4	0.2	-0.3
3966	ok	0.24	0.1	5.17e-03	5.7	5.7	2.5	2.5	-7.4	-1.9	5.7	0.9	0.2	0.2
3995	ok	0.24	4.98e-02	3.85e-03	5.7	5.7	2.5	2.5	-2.4	0.2	5.9	0.3	0.1	0.2
4037	ok	0.24	2.66e-02	2.87e-03	5.7	5.7	2.5	2.5	-6.5	0.6	-2.3	-0.2	-7.35e-03	0.2
4390	ok	0.24	0.3	0.0	5.7	5.7	2.5	2.5	42.3	33.7	-23.1	7.49e-02	4.95e-02	-3.12e-02
4419	ok	0.24	0.4	0.1	5.7	5.7	2.5	2.5	-207.2	-73.4	-31.1	7.8	1.8	-0.3
4448	ok	0.24	0.4	1.37e-02	5.7	5.7	2.5	2.5	31.6	5.6	14.7	2.6	0.5	0.2
4477	ok	0.24	0.1	5.09e-03	5.7	5.7	2.5	2.5	-7.2	-3.6	4.1	1.6	0.3	3.59e-02
4506	ok	0.24	4.47e-02	4.07e-03	5.7	5.7	2.5	2.5	-3.8	2.1	-3.1	0.5	0.2	-7.91e-02
4548	ok	0.24	3.75e-02	2.32e-03	5.7	5.7	2.5	2.5	-1.6	-0.4	-1.6	-0.4	-1.84e-02	-0.2
4724	ok	0.24	0.4	0.1	5.7	5.7	2.5	2.5	-212.7	-42.7	-50.7	7.6	1.6	0.2
4783	ok	0.24	0.5	1.58e-02	5.7	5.7	2.5	2.5	31.6	17.3	-1.7	2.6	0.6	0.3
4842	ok	0.24	0.2	8.37e-03	5.7	5.7	2.5	2.5	-5.2	2.1	14.1	1.6	0.4	0.1
4901	ok	0.24	4.86e-02	5.40e-03	5.7	5.7	2.5	2.5	-5.5	0.6	-4.5	0.5	0.3	9.49e-02
4960	ok	0.24	2.57e-02	1.09e-03	5.7	5.7	2.5	2.5	-0.9	1.3	-1.6	-0.3	7.00e-02	-3.84e-03

Nodo	**x/d**	**V N/M**	**ver. rid**	**Af pr-**	**Af pr+**	**Af sec-**	**Af sec+**	**N z**	**N o**	**N zo**	**M z**	**M o**	**M zo**
								-502.75	-87.38	-50.71	-2.64	-0.53	-0.33
	0.24	0.79	0.22	5.65	5.65	2.51	2.51	42.27	33.69	124.37	7.83	1.84	0.37

Nodo	**Stato**	**Max tau**	**Ver V pr**	**Ver V sec**	**Af V pr**	**Af V sec**	**V pr**	**V sec**
		daN/cm2					kN/ m	kN/ m
382	ok	1.81						
441	ok	1.47						
500	ok	0.96						
559	ok	0.65						
618	ok	0.43						
677	ok	0.79						
787	ok	1.99						
816	ok	1.43						
845	ok	1.11						

874	ok	0.68						
903	ok	0.52						
945	ok	0.83						
995	ok	1.99						
1024	ok	1.31						
1053	ok	1.10						
1082	ok	0.65						
1111	ok	0.41						
1153	ok	0.50						
1216	ok	1.80						
1273	ok	1.33						
1330	ok	0.95						
1387	ok	0.64						
1444	ok	0.36						
1501	ok	0.47						
1551	ok	1.94						
1580	ok	1.36						
1609	ok	1.08						
1638	ok	0.67						
1667	ok	0.40						
1709	ok	0.41						
1759	ok	1.94						
1788	ok	1.35						
1817	ok	1.08						
1846	ok	0.65						
1875	ok	0.41						
1917	ok	0.45						
1980	ok	1.82						
2037	ok	1.36						
2094	ok	0.97						
2151	ok	0.63						
2208	ok	0.36						
2265	ok	0.42						
2315	ok	1.97						
2344	ok	1.38						
2373	ok	1.10						
2402	ok	0.65						
2431	ok	0.40						
2473	ok	0.40						
2523	ok	1.97						
2552	ok	1.38						
2581	ok	1.10						
2610	ok	0.73						
2639	ok	0.54						
2681	ok	0.54						
2744	ok	1.91						
2801	ok	1.39						
2858	ok	0.98						
2915	ok	0.69						
2972	ok	0.37						
3029	ok	0.42						
3079	ok	2.05						
3108	ok	1.41						
3137	ok	1.09						
3166	ok	0.66						
3195	ok	0.40						
3237	ok	0.43						
3287	ok	2.05						
3316	ok	1.37						
3345	ok	1.10						
3374	ok	0.68						
3403	ok	0.44						
3445	ok	0.42						
3514	ok	2.02						
3571	ok	2.08						
3628	ok	1.76						
3685	ok	0.75						
3742	ok	0.40						
3799	ok	0.48						
3879	ok	0.85						
3908	ok	2.66						
3937	ok	1.76						
3966	ok	0.78						
3995	ok	0.37						
4037	ok	0.47						
4390	ok	1.11						
4419	ok Av	6.89	0.31	0.04	7.8	1.0	75.2	9.3
4448	ok	1.74						
4477	ok	1.01						

4506	ok	0.40						
4548	ok	0.74						
4724	ok Av	7.10	0.31	0.09	7.8	2.2	75.5	20.8
4783	ok	1.21						
4842	ok	0.97						
4901	ok	0.32						
4960	ok	0.77						

Nodo	Max tau	Ver V pr	Ver V sec	Af V pr	Af V sec	V pr	V sec
	7.10	0.31	0.09	7.80	2.15	75.49	20.85

Macro Setto	Spessore	Id Materiale	Id Criterio	Progettazione
	cm			
19	15.00	1	1	Singolo elemento NON DISSIPATIVO

Nodo	Stato	x/d	V N/M	ver. rid	Af pr-	Af pr+	Af sec-	Af sec+	N z	N o	N zo	M z	M o	M zo
									kN/ m	kN/ m	kN/ m	kN	kN	kN
384	ok	0.24	0.5	0.2	5.7	5.7	2.5	2.5	-513.8	-89.2	127.5	-4.4	-0.6	5.06e-02
443	ok	0.24	0.5	4.12e-02	5.7	5.7	2.5	2.5	73.4	13.3	66.3	-3.5	-0.4	8.69e-02
502	ok	0.24	0.2	2.92e-02	5.7	5.7	2.5	2.5	-69.1	-15.9	13.6	2.6	0.5	-5.22e-02
561	ok	0.24	0.2	2.24e-02	5.7	5.7	2.5	2.5	-52.5	-10.0	12.5	1.7	0.4	-7.19e-02
620	ok	0.24	0.1	2.25e-02	5.7	5.7	2.5	2.5	-40.7	-9.3	-5.6	0.8	0.2	-6.60e-02
679	ok	0.24	5.06e-02	3.06e-02	5.7	5.7	2.5	2.5	-45.7	-13.9	-26.1	-1.13e-02	-4.91e-04	5.68e-04
788	ok	0.24	0.8	0.2	5.7	5.7	2.5	2.5	-429.1	-54.4	75.6	-4.5	-0.7	-0.2
817	ok	0.24	0.5	5.54e-02	5.7	5.7	2.5	2.5	1.7	-19.0	105.7	-3.5	-0.5	-0.2
846	ok	0.24	0.2	2.82e-02	5.7	5.7	2.5	2.5	-70.4	-5.9	4.5	2.6	0.5	0.2
875	ok	0.24	0.1	2.13e-02	5.7	5.7	2.5	2.5	-53.6	-8.9	0.3	1.7	0.3	0.2
904	ok	0.24	5.87e-02	2.05e-02	5.7	5.7	2.5	2.5	-38.8	-5.4	5.2	0.8	0.2	0.2
947	ok	0.24	6.97e-02	2.50e-02	5.7	5.7	2.5	2.5	-51.1	-8.3	-7.3	1.52e-03	5.36e-02	-0.3
996	ok	0.24	0.3	0.1	5.7	5.7	2.5	2.5	-175.7	-11.7	29.0	3.3	0.6	-0.3
1025	ok	0.24	0.2	4.59e-02	5.7	5.7	2.5	2.5	-87.9	-40.4	42.4	2.6	0.6	-0.3
1054	ok	0.24	0.2	2.97e-02	5.7	5.7	2.5	2.5	-17.6	-32.4	34.2	2.0	0.5	-0.3
1083	ok	0.24	0.1	2.14e-02	5.7	5.7	2.5	2.5	-48.5	-4.9	-7.0	1.2	0.3	-0.3
1112	ok	0.24	6.13e-02	2.08e-02	5.7	5.7	2.5	2.5	-43.9	-1.3	-10.0	0.6	0.1	-0.3
1155	ok	0.24	6.05e-02	1.93e-02	5.7	5.7	2.5	2.5	-47.6	-1.6	-3.5	3.99e-02	3.20e-03	-0.3
1218	ok	0.24	0.3	6.66e-02	5.7	5.7	2.5	2.5	-164.0	-22.3	20.6	3.3	0.6	-6.59e-02
1275	ok	0.24	0.2	4.17e-02	5.7	5.7	2.5	2.5	-75.8	-11.0	21.0	-2.6	-0.5	-0.1
1332	ok	0.24	0.1	2.69e-02	5.7	5.7	2.5	2.5	-21.6	-13.1	37.4	1.9	0.4	-9.36e-02
1389	ok	0.24	6.25e-02	2.12e-02	5.7	5.7	2.5	2.5	-52.1	-4.5	-6.9	1.2	0.3	-9.92e-02
1446	ok	0.24	4.39e-02	2.02e-02	5.7	5.7	2.5	2.5	-45.9	-1.6	-6.3	0.6	0.1	-9.25e-02
1503	ok	0.24	2.42e-02	1.82e-02	5.7	5.7	2.5	2.5	-44.8	-1.2	-6.2	-2.64e-02	-1.25e-02	-0.1
1552	ok	0.24	0.2	4.61e-02	5.7	5.7	2.5	2.5	-114.6	-4.0	10.4	-3.3	-0.5	-0.2
1581	ok	0.24	0.1	3.42e-02	5.7	5.7	2.5	2.5	-77.0	-13.8	23.0	-2.6	-0.6	-0.3
1610	ok	0.24	0.1	2.36e-02	5.7	5.7	2.5	2.5	-31.5	-10.2	22.7	-2.0	-0.4	-0.2
1639	ok	0.24	6.60e-02	1.78e-02	5.7	5.7	2.5	2.5	-40.6	-2.2	-8.3	-1.2	-0.3	-0.3
1668	ok	0.24	3.45e-02	1.65e-02	5.7	5.7	2.5	2.5	-38.2	-0.5	-9.1	-0.6	-0.1	-0.2
1711	ok	0.24	2.42e-02	1.71e-02	5.7	5.7	2.5	2.5	-42.2	0.3	-5.8	-2.09e-02	-4.14e-03	-0.2
1760	ok	0.24	0.2	3.84e-02	5.7	5.7	2.5	2.5	-83.1	7.61e-02	6.5	3.3	0.5	-0.2
1789	ok	0.24	0.1	3.15e-02	5.7	5.7	2.5	2.5	-66.1	-8.8	17.1	2.6	0.6	-0.3
1818	ok	0.24	9.75e-02	2.41e-02	5.7	5.7	2.5	2.5	-39.4	-7.0	17.9	2.0	0.4	-0.2
1847	ok	0.24	6.95e-02	1.74e-02	5.7	5.7	2.5	2.5	-32.5	-1.8	-12.4	1.3	0.3	-0.2
1876	ok	0.24	4.50e-02	1.55e-02	5.7	5.7	2.5	2.5	-31.3	-0.6	-11.7	0.6	0.1	-0.2
1919	ok	0.24	3.41e-02	1.56e-02	5.7	5.7	2.5	2.5	-35.4	0.5	-5.9	2.72e-02	-3.78e-02	-0.2
1982	ok	0.24	0.2	3.62e-02	5.7	5.7	2.5	2.5	-70.1	-6.2	6.7	3.3	0.7	1.93e-02
2039	ok	0.24	0.1	2.90e-02	5.7	5.7	2.5	2.5	-53.7	-7.1	10.9	2.7	0.5	0.1
2096	ok	0.24	9.71e-02	2.44e-02	5.7	5.7	2.5	2.5	-35.6	-6.3	9.7	-2.0	-0.4	-8.42e-02
2153	ok	0.24	6.31e-02	1.75e-02	5.7	5.7	2.5	2.5	-18.4	-4.9	16.5	1.3	0.3	-8.73e-02
2210	ok	0.24	5.80e-02	1.43e-02	5.7	5.7	2.5	2.5	-33.3	-3.9	-7.3	0.6	0.1	-7.38e-02
2267	ok	0.24	3.40e-02	1.43e-02	5.7	5.7	2.5	2.5	-35.5	-3.6	-3.7	3.53e-02	2.40e-03	-9.66e-02
2316	ok	0.24	0.2	2.70e-02	5.7	5.7	2.5	2.5	-64.8	1.89e-02	4.0	3.3	0.5	0.2
2345	ok	0.24	0.1	2.60e-02	5.7	5.7	2.5	2.5	-52.6	-3.4	11.4	2.6	0.6	0.3
2374	ok	0.24	0.1	2.21e-02	5.7	5.7	2.5	2.5	-36.1	-1.6	12.8	2.0	0.4	0.2
2403	ok	0.24	7.23e-02	1.45e-02	5.7	5.7	2.5	2.5	-21.4	-2.8	-17.1	-1.2	-0.3	-0.3
2432	ok	0.24	8.03e-02	1.14e-02	5.7	5.7	2.5	2.5	-17.6	-2.0	-7.1	-0.6	-0.1	-0.2
2475	ok	0.24	4.14e-02	1.42e-02	5.7	5.7	2.5	2.5	-32.8	-1.5	-8.7	1.46e-02	7.99e-03	-0.2
2524	ok	0.24	0.2	2.58e-02	5.7	5.7	2.5	2.5	-48.8	1.7	3.9	-3.3	-0.5	0.2
2553	ok	0.24	0.2	2.41e-02	5.7	5.7	2.5	2.5	-43.3	-1.5	11.5	2.7	0.6	-0.3
2582	ok	0.24	9.95e-02	2.08e-02	5.7	5.7	2.5	2.5	-34.2	-2.5	12.3	2.0	0.5	-0.2
2611	ok	0.24	0.1	2.76e-02	5.7	5.7	2.5	2.5	-46.3	-12.4	-20.7	1.5	0.2	-0.2
2640	ok	0.24	0.1	2.41e-02	5.7	5.7	2.5	2.5	-27.9	-12.0	5.3	0.1	5.62e-02	0.3
2683	ok	0.24	7.30e-02	1.14e-02	5.7	5.7	2.5	2.5	-26.9	5.2	-7.1	1.20e-03	-2.91e-02	-0.3
2746	ok	0.24	0.2	2.75e-02	5.7	5.7	2.5	2.5	-54.5	-5.2	-7.4	-3.85e-02	-6.28e-03	-1.24e-04
2803	ok	0.24	0.1	2.26e-02	5.7	5.7	2.5	2.5	-33.4	-3.0	6.5	-2.7	-0.5	-0.1

2860	ok	0.24	0.1	2.02e-02	5.7	5.7	2.5	2.5	-34.1	-4.1	14.4	1.9	0.4	-4.66e-02
2917	ok	0.24	0.1	2.85e-02	5.7	5.7	2.5	2.5	-36.3	-0.7	-7.4	1.5	0.3	-0.1
2974	ok	0.24	7.17e-02	2.31e-02	5.7	5.7	2.5	2.5	-48.4	-5.4	-16.7	0.7	0.1	-8.90e-02
3031	ok	0.24	7.24e-02	9.18e-03	5.7	5.7	2.5	2.5	-21.7	-4.0	-2.6	-2.50e-02	3.86e-02	8.47e-02
3080	ok	0.24	0.2	1.90e-02	5.7	5.7	2.5	2.5	-38.6	1.5	-1.1	1.22e-02	-1.44e-03	3.41e-03
3109	ok	0.24	0.2	1.98e-02	5.7	5.7	2.5	2.5	-34.1	-1.5	7.7	-0.4	-8.89e-02	-4.41e-02
3138	ok	0.24	0.1	1.66e-02	5.7	5.7	2.5	2.5	-26.3	-1.6	7.8	-1.9	-0.4	-0.3
3167	ok	0.24	0.1	1.01e-02	5.7	5.7	2.5	2.5	-14.6	-5.5	13.7	1.4	0.3	0.3
3196	ok	0.24	6.71e-02	9.90e-03	5.7	5.7	2.5	2.5	-17.7	0.7	-10.9	0.7	0.1	0.2
3239	ok	0.24	3.69e-02	8.32e-03	5.7	5.7	2.5	2.5	-16.6	1.6	-5.9	-1.11e-02	4.78e-03	-0.3
3288	ok	0.24	0.2	1.66e-02	5.7	5.7	2.5	2.5	-33.8	-4.05e-02	-0.1	-1.78e-02	-1.15e-03	2.22e-03
3317	ok	0.24	0.2	2.00e-02	5.7	5.7	2.5	2.5	-40.0	1.0	3.5	-1.48e-02	-4.59e-03	6.18e-04
3346	ok	0.24	0.1	1.48e-02	5.7	5.7	2.5	2.5	-25.2	-1.3	6.7	5.31e-03	5.27e-02	-0.3
3375	ok	0.24	9.47e-02	8.39e-03	5.7	5.7	2.5	2.5	-11.4	-3.8	9.4	-1.3	-0.3	0.3
3404	ok	0.24	5.98e-02	7.60e-03	5.7	5.7	2.5	2.5	-3.1	-1.3	7.7	-0.6	-0.1	0.3
3447	ok	0.24	3.89e-02	6.76e-03	5.7	5.7	2.5	2.5	-14.5	1.4	-6.5	-2.39e-02	-5.20e-02	-0.3
3516	ok	0.24	0.2	1.31e-02	5.7	5.7	2.5	2.5	-26.3	-2.8	-2.2	-5.07e-02	-6.57e-03	-3.35e-03
3573	ok	0.24	0.1	2.29e-02	5.7	5.7	2.5	2.5	-35.3	-1.2	-12.8	-0.2	-3.58e-02	7.19e-03
3630	ok	0.24	0.1	1.29e-02	5.7	5.7	2.5	2.5	-4.6	-1.6	-14.4	-0.2	-2.26e-02	-1.11e-02
3687	ok	0.24	8.42e-02	8.25e-03	5.7	5.7	2.5	2.5	-12.0	-2.9	8.2	-1.3	-0.3	9.30e-02
3744	ok	0.24	4.73e-02	6.67e-03	5.7	5.7	2.5	2.5	-5.1	-0.4	10.6	-0.6	-0.1	8.86e-02
3801	ok	0.24	3.40e-02	4.75e-03	5.7	5.7	2.5	2.5	-8.0	0.8	-1.9	0.1	-1.25e-02	-9.42e-02
3880	ok	0.24	0.1	2.04e-02	5.7	5.7	2.5	2.5	12.5	-36.3	2.3	1.06e-02	-1.60e-04	-3.09e-03
3909	ok	0.24	0.2	3.42e-02	5.7	5.7	2.5	2.5	-63.5	23.8	-14.3	1.07e-02	-7.16e-03	-2.28e-03
3938	ok	0.24	0.2	2.60e-02	5.7	5.7	2.5	2.5	6.4	-13.4	-8.9	-1.7	-0.4	-0.3
3967	ok	0.24	0.1	5.14e-03	5.7	5.7	2.5	2.5	-6.4	-2.4	6.4	0.9	0.2	0.2
3996	ok	0.24	4.91e-02	3.39e-03	5.7	5.7	2.5	2.5	-1.2	4.58e-02	5.9	0.3	0.1	0.2
4039	ok	0.24	2.56e-02	3.15e-03	5.7	5.7	2.5	2.5	-7.0	0.8	-2.7	0.2	6.19e-03	-0.2
4391	ok	0.24	0.3	0.0	5.7	5.7	2.5	2.5	48.6	38.2	-26.3	9.18e-03	1.23e-02	-5.47e-03
4420	ok	0.24	0.4	0.1	5.7	5.7	2.5	2.5	-239.6	-90.3	-28.1	-8.20e-02	-2.36e-02	1.60e-02
4449	ok	0.24	0.4	1.30e-02	5.7	5.7	2.5	2.5	30.9	5.6	15.9	-2.7	-0.5	-0.2
4478	ok	0.24	0.1	4.96e-03	5.7	5.7	2.5	2.5	-5.7	-3.9	3.5	-1.7	-0.3	-3.46e-02
4507	ok	0.24	4.53e-02	3.84e-03	5.7	5.7	2.5	2.5	-3.8	2.0	-3.4	0.5	0.2	-7.99e-02
4550	ok	0.24	3.59e-02	2.19e-03	5.7	5.7	2.5	2.5	-2.0	-0.4	-1.9	-0.4	-2.16e-02	-0.2
4726	ok	0.24	0.4	0.1	5.7	5.7	2.5	2.5	-249.0	-44.2	-62.0	-0.1	-2.12e-02	-8.80e-03
4785	ok	0.24	0.5	1.50e-02	5.7	5.7	2.5	2.5	30.3	17.6	-2.9	-2.8	-0.6	-0.3
4844	ok	0.24	0.2	8.79e-03	5.7	5.7	2.5	2.5	-3.6	2.0	14.9	-1.7	-0.4	-0.1
4903	ok	0.24	4.89e-02	5.28e-03	5.7	5.7	2.5	2.5	-5.7	0.3	-4.9	0.5	0.3	9.77e-02
4962	ok	0.24	2.57e-02	9.29e-04	5.7	5.7	2.5	2.5	-1.2	1.3	-1.8	-0.3	6.91e-02	-1.41e-03

Nodo	**x/d**	**V N/M**	**ver. rid**	**Af pr-**	**Af pr+**	**Af sec-**	**Af sec+**	**N z**	**N o**	**N zo**	**M z**	**M o**	**M zo**
								-513.76	-90.31	-62.05	-4.45	-0.71	-0.32
	0.24	0.79	0.22	5.65	5.65	2.51	2.51	73.44	38.17	127.49	3.34	0.66	0.32

Nodo	**Stato**	**Max tau**	**Ver V pr**	**Ver V sec**	**Af V pr**	**Af V sec**	**V pr**	**V sec**
		daN/cm2					kN/ m	kN/ m
384	ok	1.79						
443	ok	1.47						
502	ok	0.95						
561	ok	0.64						
620	ok	0.43						
679	ok	0.79						
788	ok	1.99						
817	ok	1.43						
846	ok	1.11						
875	ok	0.68						
904	ok	0.52						
947	ok	0.82						
996	ok	1.99						
1025	ok	1.32						
1054	ok	1.10						
1083	ok	0.65						
1112	ok	0.41						
1155	ok	0.50						
1218	ok	1.79						
1275	ok	1.33						
1332	ok	0.95						
1389	ok	0.64						
1446	ok	0.36						
1503	ok	0.47						
1552	ok	1.94						
1581	ok	1.36						
1610	ok	1.08						
1639	ok	0.67						
1668	ok	0.41						
1711	ok	0.40						
1760	ok	1.94						

1789	ok	1.35						
1818	ok	1.08						
1847	ok	0.66						
1876	ok	0.41						
1919	ok	0.45						
1982	ok	1.81						
2039	ok	1.38						
2096	ok	0.93						
2153	ok	0.63						
2210	ok	0.36						
2267	ok	0.42						
2316	ok	1.96						
2345	ok	1.40						
2374	ok	1.13						
2403	ok	0.61						
2432	ok	0.40						
2475	ok	0.40						
2524	ok	1.96						
2553	ok	1.32						
2582	ok	1.13						
2611	ok	0.97						
2640	ok	0.84						
2683	ok	0.52						
2746	ok	1.90						
2803	ok	1.39						
2860	ok	0.98						
2917	ok	0.92						
2974	ok	0.82						
3031	ok	0.50						
3080	ok	2.05						
3109	ok	1.42						
3138	ok	1.09						
3167	ok	0.74						
3196	ok	0.44						
3239	ok	0.48						
3288	ok	2.05						
3317	ok	1.35						
3346	ok	1.10						
3375	ok	0.69						
3404	ok	0.46						
3447	ok	0.42						
3516	ok	2.02						
3573	ok	2.06						
3630	ok	1.75						
3687	ok	0.76						
3744	ok	0.42						
3801	ok	0.48						
3880	ok	0.85						
3909	ok	2.64						
3938	ok	1.75						
3967	ok	0.77						
3996	ok	0.37						
4039	ok	0.47						
4391	ok	1.10						
4420	ok Av	6.78	0.31	0.04	7.6	0.9	74.0	8.5
4449	ok	1.75						
4478	ok	1.02						
4507	ok	0.40						
4550	ok	0.74						
4726	ok Av	6.99	0.31	0.09	7.7	2.1	74.1	20.6
4785	ok	1.18						
4844	ok	0.96						
4903	ok	0.32						
4962	ok	0.78						
Nodo		**Max tau**	**Ver V pr**	**Ver V sec**	**Af V pr**	**Af V sec**	**V pr**	**V sec**
		6.99	0.31	0.09	7.65	2.13	74.10	20.60

Macro Setto	Spessore	Id Materiale	Id Criterio	Progettazione
	cm			
20	15.00	1	1	Singolo elemento NON DISSIPATIVO

Nodo	Stato	x/d	V N/M	ver. rid	Af pr-	Af pr+	Af sec-	Af sec+	N z	N o	N zo	M z	M o	M zo

									kN/ m	kN/ m	kN/ m	kN	kN	kN
386	ok	0.24	0.5	0.2	5.7	5.7	2.5	2.5	-501.7	-87.2	124.2	0.7	9.38e-02	-3.75e-02
445	ok	0.24	0.5	4.19e-02	5.7	5.7	2.5	2.5	-88.1	-22.8	7.2	-3.5	-0.8	6.08e-02
504	ok	0.24	0.2	2.94e-02	5.7	5.7	2.5	2.5	-66.0	-18.9	-19.8	-2.6	-0.6	4.32e-02
563	ok	0.24	0.2	2.26e-02	5.7	5.7	2.5	2.5	-52.7	-10.1	12.8	-1.7	-0.4	6.84e-02
622	ok	0.24	0.1	2.24e-02	5.7	5.7	2.5	2.5	-40.9	-9.3	-5.4	-0.8	-0.2	6.36e-02
681	ok	0.24	5.05e-02	3.06e-02	5.7	5.7	2.5	2.5	-45.7	-13.9	-25.9	-2.07e-02	4.41e-03	1.24e-03
789	ok	0.24	0.8	0.2	5.7	5.7	2.5	2.5	-422.4	-54.7	75.1	0.6	8.86e-02	3.58e-02
818	ok	0.24	0.5	5.25e-02	5.7	5.7	2.5	2.5	-84.7	8.5	1.0	-3.5	-0.8	-0.2
847	ok	0.24	0.2	2.82e-02	5.7	5.7	2.5	2.5	-65.2	18.5	-5.7	-2.6	-0.6	-0.2
876	ok	0.24	0.1	2.14e-02	5.7	5.7	2.5	2.5	-53.8	-8.8	0.6	-1.7	-0.3	-0.2
905	ok	0.24	5.80e-02	2.04e-02	5.7	5.7	2.5	2.5	-39.0	-5.2	5.5	-0.8	-0.2	-0.2
949	ok	0.24	6.97e-02	2.50e-02	5.7	5.7	2.5	2.5	-51.6	-8.3	-7.0	2.04e-03	5.72e-02	-0.3
997	ok	0.24	0.3	0.1	5.7	5.7	2.5	2.5	-248.2	-28.9	43.2	7.02e-02	2.56e-02	7.08e-02
1026	ok	0.24	0.2	4.49e-02	5.7	5.7	2.5	2.5	-85.8	-39.9	41.4	-0.3	-6.89e-02	4.91e-02
1055	ok	0.24	0.2	2.97e-02	5.7	5.7	2.5	2.5	-68.7	1.3	0.7	-0.3	-9.25e-02	-0.4
1084	ok	0.24	0.1	2.13e-02	5.7	5.7	2.5	2.5	-48.3	-4.8	-6.9	1.2	0.3	-0.3
1113	ok	0.24	6.07e-02	2.09e-02	5.7	5.7	2.5	2.5	-44.3	-1.2	-9.8	0.6	0.1	-0.3
1157	ok	0.24	6.11e-02	1.95e-02	5.7	5.7	2.5	2.5	-48.3	-1.6	-3.3	3.54e-02	2.21e-03	-0.3
1220	ok	0.24	0.3	6.55e-02	5.7	5.7	2.5	2.5	-161.2	-22.1	20.6	-0.5	-8.47e-02	1.13e-02
1277	ok	0.24	0.2	4.07e-02	5.7	5.7	2.5	2.5	-84.4	-21.5	36.0	-0.3	-6.48e-02	1.73e-02
1334	ok	0.24	0.1	2.58e-02	5.7	5.7	2.5	2.5	-53.3	-1.5	-8.0	1.9	0.4	-8.50e-02
1391	ok	0.24	6.34e-02	2.10e-02	5.7	5.7	2.5	2.5	-51.7	-4.3	-6.7	1.2	0.3	-1.00e-01
1448	ok	0.24	4.35e-02	2.04e-02	5.7	5.7	2.5	2.5	-46.4	-1.5	-6.2	0.6	0.1	-9.34e-02
1505	ok	0.24	2.49e-02	1.86e-02	5.7	5.7	2.5	2.5	-45.7	-3.5	-6.1	-2.95e-02	-1.32e-02	-0.1
1553	ok	0.24	0.2	4.53e-02	5.7	5.7	2.5	2.5	-112.7	-4.1	10.4	0.4	7.03e-02	2.32e-02
1582	ok	0.24	0.1	3.30e-02	5.7	5.7	2.5	2.5	-74.9	-13.9	22.3	0.3	7.66e-02	3.72e-02
1611	ok	0.24	0.1	2.22e-02	5.7	5.7	2.5	2.5	-29.7	-10.6	22.5	0.2	5.74e-02	3.20e-02
1640	ok	0.24	6.95e-02	1.72e-02	5.7	5.7	2.5	2.5	-40.0	-2.1	-7.1	-1.2	-0.3	-0.3
1669	ok	0.24	3.43e-02	1.67e-02	5.7	5.7	2.5	2.5	-39.2	-0.1	-8.7	-0.6	-0.1	-0.2
1713	ok	0.24	2.21e-02	1.75e-02	5.7	5.7	2.5	2.5	-43.1	0.3	-6.0	-2.06e-02	-2.02e-03	-0.2
1761	ok	0.24	0.2	3.80e-02	5.7	5.7	2.5	2.5	-82.7	-0.2	6.1	3.3	0.5	-0.2
1790	ok	0.24	0.1	3.04e-02	5.7	5.7	2.5	2.5	-64.3	-2.6	8.1	2.6	0.4	-0.3
1819	ok	0.24	0.1	2.20e-02	5.7	5.7	2.5	2.5	-36.2	-7.9	17.4	-0.2	-4.69e-02	3.01e-02
1848	ok	0.24	6.75e-02	1.72e-02	5.7	5.7	2.5	2.5	-30.7	-1.2	-9.9	1.3	0.3	-0.2
1877	ok	0.24	4.53e-02	1.62e-02	5.7	5.7	2.5	2.5	-34.3	-0.6	-7.8	0.6	8.71e-02	-0.2
1921	ok	0.24	2.93e-02	1.59e-02	5.7	5.7	2.5	2.5	-39.1	0.2	-6.0	-3.80e-03	-2.95e-02	-0.3
1984	ok	0.24	0.2	3.61e-02	5.7	5.7	2.5	2.5	-71.2	-6.7	6.1	0.4	7.80e-02	4.50e-03
2041	ok	0.24	0.1	2.88e-02	5.7	5.7	2.5	2.5	-60.5	-6.7	10.5	2.7	0.5	-0.1
2098	ok	0.24	9.70e-02	2.13e-02	5.7	5.7	2.5	2.5	-26.6	-6.8	9.9	0.2	4.76e-02	1.51e-02
2155	ok	0.24	7.77e-02	1.73e-02	5.7	5.7	2.5	2.5	-32.4	-2.8	-10.0	1.3	0.3	-7.16e-02
2212	ok	0.24	4.83e-02	1.64e-02	5.7	5.7	2.5	2.5	-27.1	-1.1	-10.7	-0.6	-0.1	-7.93e-02
2269	ok	0.24	2.98e-02	1.44e-02	5.7	5.7	2.5	2.5	-33.7	-2.9	-7.8	-1.93e-02	-1.04e-02	-0.1
2317	ok	0.24	0.2	2.66e-02	5.7	5.7	2.5	2.5	-56.8	1.0	4.5	2.85e-02	0.2	-0.4
2346	ok	0.24	0.1	2.73e-02	5.7	5.7	2.5	2.5	-51.7	0.9	8.4	2.87e-02	0.1	-0.3
2375	ok	0.24	0.1	1.81e-02	5.7	5.7	2.5	2.5	-20.1	-6.1	-19.5	-0.4	-0.1	-0.3
2404	ok	0.24	0.1	1.52e-02	5.7	5.7	2.5	2.5	-19.9	1.2	-5.2	-1.2	-0.2	-0.2
2433	ok	0.24	4.59e-02	1.51e-02	5.7	5.7	2.5	2.5	-31.7	0.3	-11.2	-0.6	-0.1	-0.2
2477	ok	0.24	4.13e-02	1.32e-02	5.7	5.7	2.5	2.5	-27.1	0.3	-10.0	6.13e-04	7.00e-04	-0.3
2525	ok	0.24	0.2	2.53e-02	5.7	5.7	2.5	2.5	-47.9	2.1	4.9	-0.4	-7.03e-02	2.75e-02
2554	ok	0.24	0.1	2.49e-02	5.7	5.7	2.5	2.5	-35.4	2.3	19.1	-0.3	-5.71e-02	2.65e-02
2583	ok	0.24	0.1	3.47e-02	5.7	5.7	2.5	2.5	-10.2	9.7	-29.1	-0.4	-8.14e-02	-0.3
2612	ok	0.24	0.1	3.15e-02	5.7	5.7	2.5	2.5	-50.1	-16.3	22.5	-0.2	-2.75e-02	3.75e-02
2641	ok	0.24	0.1	1.34e-02	5.7	5.7	2.5	2.5	-25.0	-0.4	-9.4	-0.5	-9.34e-02	0.2
2685	ok	0.24	4.93e-02	1.14e-02	5.7	5.7	2.5	2.5	-21.1	1.4	-8.8	-3.13e-02	6.97e-03	0.2
2748	ok	0.24	0.2	2.69e-02	5.7	5.7	2.5	2.5	-53.1	-5.4	-8.0	1.89e-02	3.28e-03	5.45e-03
2805	ok	0.24	0.2	2.21e-02	5.7	5.7	2.5	2.5	-42.0	-5.1	8.5	2.6	0.5	-6.81e-02
2862	ok	0.24	0.2	3.60e-02	5.7	5.7	2.5	2.5	-62.0	-7.9	22.4	2.4	0.5	-0.1
2919	ok	0.24	0.1	2.83e-02	5.7	5.7	2.5	2.5	-23.0	-2.6	-14.7	1.4	0.3	-3.45e-03
2976	ok	0.24	7.88e-02	1.30e-02	5.7	5.7	2.5	2.5	-25.6	-2.7	-10.4	-0.5	-0.1	0.1
3033	ok	0.24	4.58e-02	9.51e-03	5.7	5.7	2.5	2.5	-21.9	-2.7	-6.1	-2.23e-02	-8.38e-03	0.1
3081	ok	0.24	0.2	1.89e-02	5.7	5.7	2.5	2.5	-38.2	1.3	-1.3	6.86e-03	3.22e-05	-9.97e-04
3110	ok	0.24	0.1	2.08e-02	5.7	5.7	2.5	2.5	-36.2	1.6	6.5	0.3	7.80e-02	3.51e-02
3139	ok	0.24	0.2	1.37e-02	5.7	5.7	2.5	2.5	-22.1	-4.8	14.6	2.2	0.5	0.3
3168	ok	0.24	0.1	1.00e-02	5.7	5.7	2.5	2.5	-2.7	-2.8	6.5	1.5	0.3	0.2
3197	ok	0.24	5.37e-02	9.99e-03	5.7	5.7	2.5	2.5	-18.0	-1.0	-7.7	-0.5	-9.64e-02	-0.2
3241	ok	0.24	4.31e-02	7.82e-03	5.7	5.7	2.5	2.5	-14.4	-0.9	-5.1	1.89e-03	1.96e-03	-0.3
3289	ok	0.24	0.2	1.67e-02	5.7	5.7	2.5	2.5	-33.8	-0.1	-0.4	7.40e-03	4.81e-04	-4.76e-05
3318	ok	0.24	0.1	1.95e-02	5.7	5.7	2.5	2.5	-33.0	2.0	7.7	-4.62e-02	-5.02e-02	0.2
3347	ok	0.24	0.1	1.24e-02	5.7	5.7	2.5	2.5	-18.4	-2.4	8.7	-1.9	-0.3	0.2
3376	ok	0.24	0.1	7.77e-03	5.7	5.7	2.5	2.5	-8.9	-2.2	8.0	-1.3	-0.2	0.3
3405	ok	0.24	5.96e-02	7.84e-03	5.7	5.7	2.5	2.5	-14.0	4.20e-02	-7.2	0.6	0.2	-0.3
3449	ok	0.24	4.14e-02	6.12e-03	5.7	5.7	2.5	2.5	-13.7	0.6	-4.9	-2.51e-03	-4.75e-02	-0.3
3518	ok	0.24	0.2	1.30e-02	5.7	5.7	2.5	2.5	-26.2	-2.8	-2.3	9.46e-03	3.14e-03	3.21e-03
3575	ok	0.24	0.1	2.11e-02	5.7	5.7	2.5	2.5	-33.9	-1.6	-12.1	2.3	0.4	-7.06e-02
3632	ok	0.24	0.1	1.14e-02	5.7	5.7	2.5	2.5	-2.9	-1.6	-13.3	1.7	0.2	0.1
3689	ok	0.24	8.93e-02	7.33e-03	5.7	5.7	2.5	2.5	-9.0	-2.6	-9.2	1.3	0.3	-9.99e-02
3746	ok	0.24	4.14e-02	7.47e-03	5.7	5.7	2.5	2.5	-13.8	-1.6	-5.1	0.6	0.1	-8.95e-02
3803	ok	0.24	3.30e-02	4.38e-03	5.7	5.7	2.5	2.5	-10.0	-0.3	-3.1	2.11e-02	-3.73e-02	-0.1

3881	ok	0.24	0.1	1.82e-02	5.7	5.7	2.5	2.5	10.6	-32.3	1.9	-7.64e-04	2.69e-04	-4.64e-03
3910	ok	0.24	0.2	3.02e-02	5.7	5.7	2.5	2.5	-55.7	18.3	17.5	6.76e-03	1.52e-02	1.15e-02
3939	ok	0.24	0.2	2.26e-02	5.7	5.7	2.5	2.5	6.1	-12.6	-8.4	1.7	0.4	0.3
3968	ok	0.24	0.1	4.38e-03	5.7	5.7	2.5	2.5	-6.0	-2.4	4.8	-0.9	-0.2	-0.2
3997	ok	0.24	4.72e-02	3.53e-03	5.7	5.7	2.5	2.5	-7.1	0.6	-2.1	-0.3	-9.93e-02	-0.2
4041	ok	0.24	2.55e-02	3.11e-03	5.7	5.7	2.5	2.5	-6.9	0.8	-1.9	-2.85e-02	-6.16e-02	2.57e-02
4392	ok	0.24	0.3	0.0	5.7	5.7	2.5	2.5	42.6	34.4	-23.5	-5.79e-02	-2.50e-02	2.07e-02
4421	ok	0.24	0.4	0.1	5.7	5.7	2.5	2.5	-208.0	-74.4	-30.2	-8.1	-1.9	0.4
4450	ok	0.24	0.4	1.37e-02	5.7	5.7	2.5	2.5	31.9	5.2	14.8	-2.7	-0.5	-0.2
4479	ok	0.24	0.1	4.57e-03	5.7	5.7	2.5	2.5	-6.9	-4.0	3.3	-1.7	-0.3	-3.73e-02
4508	ok	0.24	4.63e-02	3.78e-03	5.7	5.7	2.5	2.5	-4.1	2.0	-3.4	-0.5	-0.1	8.18e-02
4552	ok	0.24	3.61e-02	2.19e-03	5.7	5.7	2.5	2.5	-1.9	-0.2	-1.4	0.4	1.25e-02	0.2
4728	ok	0.24	0.4	0.1	5.7	5.7	2.5	2.5	-213.0	-42.4	-50.1	-7.9	-1.7	-0.2
4787	ok	0.24	0.5	1.57e-02	5.7	5.7	2.5	2.5	31.8	17.0	-1.8	-2.8	-0.6	-0.3
4846	ok	0.24	0.2	8.14e-03	5.7	5.7	2.5	2.5	-5.2	1.6	13.4	-1.7	-0.4	-0.1
4905	ok	0.24	4.72e-02	5.00e-03	5.7	5.7	2.5	2.5	-5.7	0.5	-4.7	-0.5	-0.3	-9.90e-02
4964	ok	0.24	2.64e-02	9.82e-04	5.7	5.7	2.5	2.5	-0.9	2.1	-1.5	0.4	-7.64e-02	4.62e-03

Nodo	**x/d**	**V N/M**	**ver. rid**	**Af pr-**	**Af pr+**	**Af sec-**	**Af sec+**	**N z**	**N o**	**N zo**	**M z**	**M o**	**M zo**
								-501.66	-87.24	-50.11	-8.10	-1.91	-0.39
	0.24	0.79	0.21	5.65	5.65	2.51	2.51	42.65	34.42	124.21	3.28	0.54	0.36

Nodo	**Stato**	**Max tau** daN/cm2	**Ver V pr**	**Ver V sec**	**Af V pr**	**Af V sec**	**V pr** kN/ m	**V sec** kN/ m
386	ok	1.82						
445	ok	1.46						
504	ok	0.95						
563	ok	0.64						
622	ok	0.43						
681	ok	0.80						
789	ok	2.00						
818	ok	1.43						
847	ok	1.10						
876	ok	0.67						
905	ok	0.52						
949	ok	0.82						
997	ok	2.00						
1026	ok	1.32						
1055	ok	1.10						
1084	ok	0.65						
1113	ok	0.41						
1157	ok	0.50						
1220	ok	1.79						
1277	ok	1.33						
1334	ok	0.95						
1391	ok	0.65						
1448	ok	0.36						
1505	ok	0.48						
1553	ok	1.93						
1582	ok	1.35						
1611	ok	1.08						
1640	ok	0.67						
1669	ok	0.40						
1713	ok	0.40						
1761	ok	1.93						
1790	ok	1.34						
1819	ok	1.08						
1848	ok	0.66						
1877	ok	0.41						
1921	ok	0.45						
1984	ok	1.86						
2041	ok	1.32						
2098	ok	0.94						
2155	ok	0.63						
2212	ok	0.36						
2269	ok	0.42						
2317	ok	1.92						
2346	ok	1.31						
2375	ok	0.81						
2404	ok	0.57						
2433	ok	0.47						
2477	ok	0.39						
2525	ok	1.92						
2554	ok	1.40						
2583	ok	1.49						
2612	ok	1.22						
2641	ok	0.46						

2685	ok	0.42						
2748	ok	1.95						
2805	ok	1.34						
2862	ok	1.43						
2919	ok	1.22						
2976	ok	0.31						
3033	ok	0.40						
3081	ok	2.02						
3110	ok	1.30						
3139	ok	1.11						
3168	ok	0.78						
3197	ok	0.43						
3241	ok	0.40						
3289	ok	2.01						
3318	ok	1.36						
3347	ok	1.13						
3376	ok	0.71						
3405	ok	0.46						
3449	ok	0.41						
3518	ok	1.97						
3575	ok	2.06						
3632	ok	1.74						
3689	ok	0.75						
3746	ok	0.41						
3803	ok	0.47						
3881	ok	0.85						
3910	ok	2.64						
3939	ok	1.73						
3968	ok	0.77						
3997	ok	0.37						
4041	ok	0.47						
4392	ok	1.11						
4421	ok Av	6.83	0.31	0.04	7.7	1.0	74.6	9.2
4450	ok	1.76						
4479	ok	1.01						
4508	ok	0.40						
4552	ok	0.74						
4728	ok Av	7.02	0.31	0.09	7.7	2.2	74.7	21.3
4787	ok	1.21						
4846	ok	0.96						
4905	ok	0.32						
4964	ok	0.78						
Nodo		**Max tau**	**Ver V pr**	**Ver V sec**	**Af V pr**	**Af V sec**	**V pr**	**V sec**
		7.02	0.31	0.09	7.72	2.20	74.72	21.30

Macro Setto	Spessore	Id Materiale	Id Criterio	Progettazione
	cm			
21	15.00	1	1	Singolo elemento NON DISSIPATIVO

Nodo	Stato	x/d	V N/M	ver. rid	Af pr-	Af pr+	Af sec-	Af sec+	N z	N o	N zo	M z	M o	M zo
									kN/ m	kN/ m	kN/ m	kN	kN	kN
388	ok	0.24	0.5	0.2	5.7	5.7	2.5	2.5	-472.1	-82.5	116.4	0.7	9.34e-02	-4.57e-02
447	ok	0.24	0.5	4.33e-02	5.7	5.7	2.5	2.5	-87.1	-22.7	6.1	-3.5	-0.8	5.87e-02
506	ok	0.24	0.2	2.98e-02	5.7	5.7	2.5	2.5	-67.3	-19.2	-19.5	-2.6	-0.6	4.32e-02
565	ok	0.24	0.2	2.28e-02	5.7	5.7	2.5	2.5	-53.3	-10.2	13.0	-1.7	-0.3	6.71e-02
624	ok	0.24	0.1	2.27e-02	5.7	5.7	2.5	2.5	-41.3	-9.3	-5.4	-0.8	-0.2	6.29e-02
683	ok	0.24	5.09e-02	3.07e-02	5.7	5.7	2.5	2.5	-45.8	-14.0	-26.1	-3.80e-02	7.70e-03	3.11e-03
790	ok	0.24	0.8	0.2	5.7	5.7	2.5	2.5	-405.0	-55.2	73.4	0.6	8.70e-02	3.27e-02
819	ok	0.24	0.5	4.84e-02	5.7	5.7	2.5	2.5	-83.3	10.5	-0.8	-3.4	-0.7	-0.2
848	ok	0.24	0.2	2.83e-02	5.7	5.7	2.5	2.5	-65.4	19.3	-5.9	-2.5	-0.6	-0.2
877	ok	0.24	0.1	2.16e-02	5.7	5.7	2.5	2.5	-54.3	-8.3	0.5	-1.7	-0.3	-0.2
906	ok	0.24	5.81e-02	2.06e-02	5.7	5.7	2.5	2.5	-39.6	-5.0	5.5	-0.8	-0.2	-0.2
951	ok	0.24	6.96e-02	2.51e-02	5.7	5.7	2.5	2.5	-52.0	-8.4	-7.0	1.85e-03	6.16e-02	-0.3
998	ok	0.24	0.3	9.80e-02	5.7	5.7	2.5	2.5	-237.1	-28.8	42.5	8.08e-02	2.53e-02	6.86e-02
1027	ok	0.24	0.2	4.23e-02	5.7	5.7	2.5	2.5	-80.8	-38.2	38.9	-0.3	-6.44e-02	4.90e-02
1056	ok	0.24	0.2	2.96e-02	5.7	5.7	2.5	2.5	-45.5	7.1	-8.5	1.9	0.3	-0.3
1085	ok	0.24	0.1	2.15e-02	5.7	5.7	2.5	2.5	-48.9	-4.1	-7.2	1.2	0.3	-0.3
1114	ok	0.24	6.14e-02	2.12e-02	5.7	5.7	2.5	2.5	-45.0	-1.0	-10.0	0.6	0.1	-0.3
1159	ok	0.24	6.17e-02	1.97e-02	5.7	5.7	2.5	2.5	-48.8	-1.7	-3.5	3.33e-02	6.40e-03	-0.3
1222	ok	0.24	0.3	6.23e-02	5.7	5.7	2.5	2.5	-153.2	-21.6	20.2	-0.4	-7.67e-02	1.64e-02
1279	ok	0.24	0.2	3.83e-02	5.7	5.7	2.5	2.5	-79.2	-20.6	33.9	-0.3	-5.91e-02	1.99e-02
1336	ok	0.24	0.1	2.48e-02	5.7	5.7	2.5	2.5	-52.3	-1.0	-8.8	1.9	0.4	-8.91e-02

1393	ok	0.24	6.21e-02	2.12e-02	5.7	5.7	2.5	2.5	-52.1	-3.7	-7.4	1.2	0.2	-0.1
1450	ok	0.24	4.53e-02	2.09e-02	5.7	5.7	2.5	2.5	-47.1	-1.3	-6.7	0.6	0.1	-9.97e-02
1507	ok	0.24	2.60e-02	1.88e-02	5.7	5.7	2.5	2.5	-46.2	-3.6	-6.5	-3.73e-02	-1.37e-02	-0.1
1554	ok	0.24	0.2	4.27e-02	5.7	5.7	2.5	2.5	-106.1	-4.1	10.6	0.4	6.36e-02	2.44e-02
1583	ok	0.24	0.1	3.10e-02	5.7	5.7	2.5	2.5	-69.5	-13.9	21.9	0.3	6.86e-02	3.62e-02
1612	ok	0.24	0.1	2.09e-02	5.7	5.7	2.5	2.5	-28.1	-10.0	23.1	0.2	5.09e-02	3.19e-02
1641	ok	0.24	6.79e-02	1.75e-02	5.7	5.7	2.5	2.5	-40.5	-1.0	-7.5	-1.2	-0.3	-0.3
1670	ok	0.24	3.46e-02	1.71e-02	5.7	5.7	2.5	2.5	-39.9	0.2	-9.5	-0.5	-0.1	-0.2
1715	ok	0.24	2.24e-02	1.77e-02	5.7	5.7	2.5	2.5	-43.4	0.3	-6.7	-1.52e-02	-8.76e-04	-0.2
1762	ok	0.24	0.2	3.57e-02	5.7	5.7	2.5	2.5	-76.3	-2.61e-02	6.1	-0.4	-6.28e-02	2.66e-02
1791	ok	0.24	0.2	2.75e-02	5.7	5.7	2.5	2.5	-57.0	-9.7	16.1	-0.3	-6.52e-02	3.52e-02
1820	ok	0.24	0.1	2.06e-02	5.7	5.7	2.5	2.5	-35.0	-8.0	19.5	-0.2	-4.75e-02	3.02e-02
1849	ok	0.24	6.77e-02	1.82e-02	5.7	5.7	2.5	2.5	-32.6	4.17e-02	-10.7	1.2	0.3	-0.2
1878	ok	0.24	4.86e-02	1.66e-02	5.7	5.7	2.5	2.5	-34.9	0.4	-12.3	0.5	0.1	-0.2
1923	ok	0.24	2.85e-02	1.60e-02	5.7	5.7	2.5	2.5	-36.2	0.6	-7.5	2.03e-02	-3.19e-02	-0.2
1986	ok	0.24	0.2	3.49e-02	5.7	5.7	2.5	2.5	-69.4	-7.1	3.4	0.4	8.08e-02	1.07e-02
2043	ok	0.24	0.2	2.31e-02	5.7	5.7	2.5	2.5	-40.2	-7.5	8.6	2.4	0.5	0.1
2100	ok	0.24	0.1	2.01e-02	5.7	5.7	2.5	2.5	-28.7	-5.9	18.5	1.8	0.4	4.82e-02
2157	ok	0.24	6.81e-02	1.95e-02	5.7	5.7	2.5	2.5	-35.2	-2.1	-11.9	1.2	0.2	-8.27e-02
2214	ok	0.24	4.47e-02	1.63e-02	5.7	5.7	2.5	2.5	-27.3	-1.6	-12.4	-0.6	-0.1	-9.77e-02
2271	ok	0.24	3.19e-02	1.43e-02	5.7	5.7	2.5	2.5	-33.1	-2.7	-8.4	-2.55e-02	-1.15e-02	-0.1
2318	ok	0.24	0.2	2.93e-02	5.7	5.7	2.5	2.5	-68.9	0.2	3.4	0.4	7.10e-02	3.19e-02
2347	ok	0.24	0.2	2.06e-02	5.7	5.7	2.5	2.5	-34.5	-5.7	5.6	2.5	0.6	0.3
2376	ok	0.24	0.1	1.84e-02	5.7	5.7	2.5	2.5	-24.9	-5.8	21.2	1.8	0.5	0.2
2405	ok	0.24	6.58e-02	1.81e-02	5.7	5.7	2.5	2.5	-26.8	0.2	-11.2	-1.2	-0.2	-0.2
2434	ok	0.24	4.88e-02	1.32e-02	5.7	5.7	2.5	2.5	-28.3	-0.9	-11.1	-0.5	-9.16e-02	-0.2
2479	ok	0.24	4.35e-02	1.34e-02	5.7	5.7	2.5	2.5	-26.9	-4.40e-02	-9.7	2.26e-03	-2.69e-03	-0.3
2526	ok	0.24	0.2	2.44e-02	5.7	5.7	2.5	2.5	-35.0	6.6	12.1	-2.9	-0.3	4.93e-04
2555	ok	0.24	0.2	4.06e-02	5.7	5.7	2.5	2.5	-80.8	-9.2	-10.1	7.22e-03	-2.32e-03	-4.19e-03
2584	ok	0.24	0.1	3.72e-02	5.7	5.7	2.5	2.5	-64.6	-18.0	24.3	-2.4	-0.4	0.3
2613	ok	0.24	0.1	1.56e-02	5.7	5.7	2.5	2.5	-14.5	-11.3	10.9	-1.1	-0.2	0.3
2642	ok	0.24	5.87e-02	1.24e-02	5.7	5.7	2.5	2.5	-23.4	-6.32e-02	-9.8	0.5	7.03e-02	-0.2
2687	ok	0.24	5.08e-02	1.14e-02	5.7	5.7	2.5	2.5	-21.5	0.9	-8.3	7.87e-03	-5.47e-02	-0.2
2750	ok	0.24	0.2	2.39e-02	5.7	5.7	2.5	2.5	-41.0	-9.7	-3.6	-3.0	-0.5	5.85e-02
2807	ok	0.24	0.2	3.80e-02	5.7	5.7	2.5	2.5	-77.2	-9.3	15.7	-3.2	-0.5	0.2
2864	ok	0.24	0.2	3.25e-02	5.7	5.7	2.5	2.5	-23.4	-2.6	-14.7	2.3	0.5	-6.82e-02
2921	ok	0.24	9.88e-02	1.59e-02	5.7	5.7	2.5	2.5	-25.5	-3.3	-13.1	-1.2	-0.3	0.1
2978	ok	0.24	5.42e-02	1.20e-02	5.7	5.7	2.5	2.5	-15.8	-0.9	-9.1	-0.5	-0.1	-9.34e-02
3035	ok	0.24	4.55e-02	9.32e-03	5.7	5.7	2.5	2.5	-21.3	-2.1	-6.3	3.28e-02	-2.92e-02	-0.1
3082	ok	0.24	0.2	2.10e-02	5.7	5.7	2.5	2.5	-39.1	2.9	0.6	3.1	0.5	0.2
3111	ok	0.24	0.2	1.59e-02	5.7	5.7	2.5	2.5	-30.3	1.0	11.0	2.9	0.5	0.3
3140	ok	0.24	0.2	1.16e-02	5.7	5.7	2.5	2.5	-8.9	-2.6	5.0	-2.3	-0.6	-0.2
3169	ok	0.24	8.24e-02	1.25e-02	5.7	5.7	2.5	2.5	-16.4	-0.5	-6.1	1.2	0.2	0.3
3198	ok	0.24	6.20e-02	8.19e-03	5.7	5.7	2.5	2.5	-16.5	-2.8	-8.1	0.6	8.75e-02	0.2
3243	ok	0.24	4.38e-02	7.77e-03	5.7	5.7	2.5	2.5	-14.2	7.70e-02	-5.6	-8.15e-04	-7.12e-03	-0.3
3290	ok	0.24	0.2	1.65e-02	5.7	5.7	2.5	2.5	-33.5	5.49e-02	0.2	-1.92e-02	-1.59e-03	2.62e-04
3319	ok	0.24	0.2	1.43e-02	5.7	5.7	2.5	2.5	-20.8	-0.6	9.4	-2.7	-0.5	0.2
3348	ok	0.24	0.1	1.03e-02	5.7	5.7	2.5	2.5	-14.9	-1.7	5.4	-1.9	-0.4	0.3
3377	ok	0.24	9.97e-02	9.43e-03	5.7	5.7	2.5	2.5	-15.2	0.4	8.5	6.13e-04	-3.16e-02	-0.3
3406	ok	0.24	5.41e-02	7.75e-03	5.7	5.7	2.5	2.5	-13.1	0.9	-5.9	0.6	7.08e-02	-0.2
3451	ok	0.24	4.52e-02	6.15e-03	5.7	5.7	2.5	2.5	-13.5	0.4	-5.3	-4.37e-03	-5.46e-02	-0.3
3520	ok	0.24	0.3	1.25e-02	5.7	5.7	2.5	2.5	-25.0	-2.8	-2.6	-5.41e-02	-7.70e-03	-7.49e-03
3577	ok	0.24	0.2	1.54e-02	5.7	5.7	2.5	2.5	-19.9	-2.0	-8.3	2.2	0.3	-0.1
3634	ok	0.24	0.1	9.78e-03	5.7	5.7	2.5	2.5	-16.1	-2.9	7.1	-1.9	-0.5	7.03e-02
3691	ok	0.24	8.43e-02	8.17e-03	5.7	5.7	2.5	2.5	-11.1	-1.9	-8.4	-0.2	-2.93e-02	1.28e-02
3748	ok	0.24	4.20e-02	7.81e-03	5.7	5.7	2.5	2.5	-14.4	-1.1	-6.7	0.6	9.51e-02	-8.80e-02
3805	ok	0.24	3.44e-02	4.30e-03	5.7	5.7	2.5	2.5	-7.8	0.3	-0.7	0.1	-1.40e-02	-9.33e-02
3882	ok	0.24	0.1	1.10e-02	5.7	5.7	2.5	2.5	5.2	-19.7	0.7	1.70e-02	-1.13e-04	-1.67e-02
3911	ok	0.24	0.2	1.90e-02	5.7	5.7	2.5	2.5	-36.5	3.3	-13.9	-1.2	-0.5	0.2
3940	ok	0.24	0.1	1.27e-02	5.7	5.7	2.5	2.5	12.2	-11.0	-16.0	-1.5	-0.6	0.2
3969	ok	0.24	0.1	4.69e-03	5.7	5.7	2.5	2.5	-6.9	-1.5	4.1	-0.9	-0.2	-0.2
3998	ok	0.24	4.50e-02	3.86e-03	5.7	5.7	2.5	2.5	-7.2	0.5	-3.2	-0.3	-4.40e-02	-0.2
4043	ok	0.24	2.52e-02	3.02e-03	5.7	5.7	2.5	2.5	-6.9	0.5	-1.7	0.2	4.89e-03	-0.2
4393	ok	0.24	0.2	0.0	5.7	5.7	2.5	2.5	24.8	21.8	-14.5	-0.1	-3.86e-02	4.27e-02
4422	ok	0.24	0.5	6.05e-02	5.7	5.7	2.5	2.5	-126.6	-47.1	-18.6	-7.2	-1.8	0.4
4451	ok	0.24	0.3	1.17e-02	5.7	5.7	2.5	2.5	78.4	6.6	-8.8	-2.7	-0.8	1.61e-02
4480	ok	0.24	0.1	4.92e-03	5.7	5.7	2.5	2.5	-9.9	-2.4	4.3	-1.8	-0.3	-3.43e-02
4509	ok	0.24	4.68e-02	3.90e-03	5.7	5.7	2.5	2.5	-4.1	1.9	-3.3	-0.5	-0.1	7.78e-02
4554	ok	0.24	3.67e-02	2.19e-03	5.7	5.7	2.5	2.5	-0.6	-0.2	-1.0	0.4	1.52e-02	0.2
4730	ok	0.24	0.5	6.40e-02	5.7	5.7	2.5	2.5	-127.9	-24.0	-30.1	-6.9	-1.5	3.25e-02
4789	ok	0.24	0.4	1.31e-02	5.7	5.7	2.5	2.5	81.4	14.6	7.5	-2.8	-0.7	-0.3
4848	ok	0.24	0.1	7.21e-03	5.7	5.7	2.5	2.5	-9.3	1.4	10.6	-1.8	-0.4	-0.1
4907	ok	0.24	4.72e-02	4.90e-03	5.7	5.7	2.5	2.5	-5.4	1.1	-4.4	-0.5	-0.3	-0.1
4966	ok	0.24	2.74e-02	1.05e-03	5.7	5.7	2.5	2.5	-0.5	2.4	-1.2	0.4	-7.61e-02	2.46e-03

Nodo	**x/d**	**V N/M**	**ver. rid**	**Af pr-**	**Af pr+**	**Af sec-**	**Af sec+**	**N z**	**N o**	**N zo**	**M z**	**M o**	**M zo**
								-472.13	-82.47	-30.09	-7.17	-1.75	-0.34
	0.24	0.80	0.20	5.65	5.65	2.51	2.51	81.42	21.77	116.35	3.08	0.61	0.42

Nodo	Stato	Max tau daN/cm2	Ver V pr	Ver V sec	Af V pr	Af V sec	V pr kN/ m	V sec kN/ m
388	ok	1.81						
447	ok	1.46						
506	ok	0.95						
565	ok	0.64						
624	ok	0.43						
683	ok	0.81						
790	ok	1.99						
819	ok	1.43						
848	ok	1.10						
877	ok	0.67						
906	ok	0.53						
951	ok	0.82						
998	ok	1.99						
1027	ok	1.31						
1056	ok	1.09						
1085	ok	0.65						
1114	ok	0.41						
1159	ok	0.50						
1222	ok	1.80						
1279	ok	1.34						
1336	ok	0.94						
1393	ok	0.64						
1450	ok	0.35						
1507	ok	0.48						
1554	ok	1.95						
1583	ok	1.37						
1612	ok	1.08						
1641	ok	0.67						
1670	ok	0.40						
1715	ok	0.40						
1762	ok	1.95						
1791	ok	1.37						
1820	ok	1.08						
1849	ok	0.64						
1878	ok	0.40						
1923	ok	0.44						
1986	ok	1.81						
2043	ok	1.35						
2100	ok	0.94						
2157	ok	0.62						
2214	ok	0.38						
2271	ok	0.43						
2318	ok	2.19						
2347	ok	1.14						
2376	ok	0.91						
2405	ok	0.70						
2434	ok	0.42						
2479	ok	0.40						
2526	ok	2.18						
2555	ok	2.27						
2584	ok	1.78						
2613	ok	0.70						
2642	ok	0.41						
2687	ok	0.42						
2750	ok	1.78						
2807	ok	2.27						
2864	ok	1.78						
2921	ok	0.56						
2978	ok	0.37						
3035	ok	0.41						
3082	ok	2.08						
3111	ok	1.57						
3140	ok	1.16						
3169	ok	0.65						
3198	ok	0.41						
3243	ok	0.42						
3290	ok	2.07						
3319	ok	1.45						
3348	ok	1.16						
3377	ok	0.69						
3406	ok	0.44						
3451	ok	0.41						
3520	ok	2.05						
3577	ok	2.08						

3634	ok	1.74						
3691	ok	0.75						
3748	ok	0.39						
3805	ok	0.47						
3882	ok	0.87						
3911	ok	2.69						
3940	ok	1.74						
3969	ok	0.77						
3998	ok	0.37						
4043	ok	0.46						
4393	ok	1.13						
4422	ok Av	6.96	0.31	0.04	7.8	1.0	75.9	10.0
4451	ok	1.74						
4480	ok	1.01						
4509	ok	0.40						
4554	ok	0.73						
4730	ok Av	7.12	0.32	0.09	7.9	2.3	76.2	22.3
4789	ok	1.26						
4848	ok	0.96						
4907	ok	0.32						
4966	ok	0.77						
Nodo		**Max tau**	**Ver V pr**	**Ver V sec**	**Af V pr**	**Af V sec**	**V pr**	**V sec**
		7.12	0.32	0.09	7.86	2.30	76.16	22.31

Macro Setto	Spessore	Id Materiale	Id Criterio	Progettazione
	cm			
22	15.00	1	1	Singolo elemento NON DISSIPATIVO

Nodo	Stato	x/d	V N/M	ver. rid	Af pr-	Af pr+	Af sec-	Af sec+	N z	N o	N zo	M z	M o	M zo
									kN/ m	kN/ m	kN/ m	kN	kN	kN
392	ok	0.24	0.6	0.2	5.7	5.7	2.5	2.5	-482.2	-84.3	118.5	0.1	4.19e-02	4.21e-02
451	ok	0.24	0.5	4.46e-02	5.7	5.7	2.5	2.5	-89.1	-23.3	5.7	-3.6	-0.8	7.81e-02
510	ok	0.24	0.2	3.06e-02	5.7	5.7	2.5	2.5	-69.2	-19.8	-20.0	-2.7	-0.6	4.70e-02
569	ok	0.24	0.2	2.31e-02	5.7	5.7	2.5	2.5	-54.3	-10.3	12.7	-1.7	-0.4	7.21e-02
628	ok	0.24	0.1	2.28e-02	5.7	5.7	2.5	2.5	-41.8	-9.3	-5.6	-0.8	-0.2	6.64e-02
687	ok	0.24	5.18e-02	3.07e-02	5.7	5.7	2.5	2.5	-54.0	-15.0	-18.8	-0.1	2.94e-02	3.68e-02
792	ok	0.24	0.8	0.2	5.7	5.7	2.5	2.5	-415.5	-57.1	75.8	0.4	7.71e-02	1.39e-02
821	ok	0.24	0.5	4.98e-02	5.7	5.7	2.5	2.5	-85.1	11.9	-1.2	-3.5	-0.8	-0.2
850	ok	0.24	0.2	2.89e-02	5.7	5.7	2.5	2.5	-67.0	20.7	-6.4	-2.6	-0.6	-0.2
879	ok	0.24	0.1	2.20e-02	5.7	5.7	2.5	2.5	-55.3	-8.3	0.2	-1.7	-0.3	-0.2
908	ok	0.24	6.05e-02	2.07e-02	5.7	5.7	2.5	2.5	-39.9	-5.1	5.3	-0.8	-0.2	-0.2
955	ok	0.24	6.89e-02	2.51e-02	5.7	5.7	2.5	2.5	-52.3	-12.9	-10.7	-1.47e-02	0.1	-0.2
1000	ok	0.24	0.3	0.1	5.7	5.7	2.5	2.5	-243.2	-29.8	43.9	9.06e-02	2.54e-02	3.43e-02
1029	ok	0.24	0.2	4.33e-02	5.7	5.7	2.5	2.5	-82.7	-39.2	39.7	-0.3	-5.73e-02	1.90e-02
1058	ok	0.24	0.2	3.04e-02	5.7	5.7	2.5	2.5	-46.5	8.1	-9.2	1.9	0.4	-0.3
1087	ok	0.24	0.1	2.18e-02	5.7	5.7	2.5	2.5	-49.8	-4.0	-7.5	1.2	0.3	-0.3
1116	ok	0.24	6.18e-02	2.11e-02	5.7	5.7	2.5	2.5	-45.2	-0.9	-10.1	0.6	0.1	-0.3
1163	ok	0.24	6.18e-02	1.95e-02	5.7	5.7	2.5	2.5	-48.2	0.4	-2.3	3.75e-03	4.33e-03	-0.3
1226	ok	0.24	0.3	6.39e-02	5.7	5.7	2.5	2.5	-157.1	-22.2	21.0	-0.2	-5.46e-02	2.85e-03
1283	ok	0.24	0.2	3.93e-02	5.7	5.7	2.5	2.5	-81.2	-21.0	34.9	-0.2	-3.27e-02	7.40e-03
1340	ok	0.24	0.1	2.55e-02	5.7	5.7	2.5	2.5	-53.5	-0.4	-9.6	2.0	0.4	-8.55e-02
1397	ok	0.24	6.32e-02	2.17e-02	5.7	5.7	2.5	2.5	-53.0	-3.6	-7.8	1.3	0.3	-9.99e-02
1454	ok	0.24	4.65e-02	2.06e-02	5.7	5.7	2.5	2.5	-39.0	-3.3	-11.6	-0.6	-0.1	-8.44e-02
1511	ok	0.24	2.67e-02	1.87e-02	5.7	5.7	2.5	2.5	-45.0	-3.5	-6.0	-0.1	-2.14e-02	2.17e-02
1556	ok	0.24	0.2	4.37e-02	5.7	5.7	2.5	2.5	-108.6	-4.3	11.1	0.4	7.85e-02	1.71e-02
1585	ok	0.24	0.1	3.21e-02	5.7	5.7	2.5	2.5	-72.2	-13.6	22.8	0.3	6.78e-02	3.15e-02
1614	ok	0.24	0.1	2.16e-02	5.7	5.7	2.5	2.5	-29.4	-9.5	22.6	0.2	4.87e-02	2.64e-02
1643	ok	0.24	6.53e-02	1.80e-02	5.7	5.7	2.5	2.5	-41.1	-1.2	-8.9	-1.3	-0.3	-0.3
1672	ok	0.24	3.69e-02	1.71e-02	5.7	5.7	2.5	2.5	-39.6	8.56e-02	-10.0	-0.6	-0.1	-0.2
1719	ok	0.24	2.29e-02	1.76e-02	5.7	5.7	2.5	2.5	-40.2	5.40e-02	-8.2	-3.37e-03	9.00e-03	-0.3
1764	ok	0.24	0.2	3.61e-02	5.7	5.7	2.5	2.5	-76.9	-8.66e-02	6.6	-0.4	-7.82e-02	1.66e-02
1793	ok	0.24	0.1	2.91e-02	5.7	5.7	2.5	2.5	-61.1	-8.7	17.0	-0.3	-7.09e-02	3.24e-02
1822	ok	0.24	0.1	2.18e-02	5.7	5.7	2.5	2.5	-36.8	-6.9	18.0	-0.2	-5.16e-02	2.65e-02
1851	ok	0.24	7.19e-02	1.73e-02	5.7	5.7	2.5	2.5	-32.9	-0.7	-12.5	1.3	0.3	-0.2
1880	ok	0.24	5.04e-02	1.64e-02	5.7	5.7	2.5	2.5	-34.2	-0.9	-9.4	0.6	9.18e-02	-0.2
1927	ok	0.24	3.23e-02	1.59e-02	5.7	5.7	2.5	2.5	-35.5	0.7	-7.3	2.48e-02	-3.99e-02	-0.2
1990	ok	0.24	0.2	3.27e-02	5.7	5.7	2.5	2.5	-65.0	-6.0	6.2	0.3	7.07e-02	6.76e-03
2047	ok	0.24	0.1	2.59e-02	5.7	5.7	2.5	2.5	-60.3	-9.0	14.4	-0.2	-4.72e-02	1.32e-02
2104	ok	0.24	9.68e-02	2.18e-02	5.7	5.7	2.5	2.5	-37.3	-5.6	19.5	-0.1	-2.96e-02	8.18e-03
2161	ok	0.24	6.98e-02	1.74e-02	5.7	5.7	2.5	2.5	-23.8	-1.0	-14.4	-1.4	-0.3	-8.12e-02
2218	ok	0.24	5.37e-02	1.53e-02	5.7	5.7	2.5	2.5	-24.9	-1.8	-11.1	-0.6	-0.1	-8.92e-02
2275	ok	0.24	3.70e-02	1.41e-02	5.7	5.7	2.5	2.5	-34.8	-3.4	-4.7	7.88e-02	5.76e-03	-9.70e-02

2320	ok	0.24	0.2	2.41e-02	5.7	5.7	2.5	2.5	-53.3	0.5	3.2	-2.45e-02	0.1	-0.4
2349	ok	0.24	0.1	2.27e-02	5.7	5.7	2.5	2.5	-48.6	-4.4	11.7	0.3	7.16e-02	3.12e-02
2378	ok	0.24	0.1	1.80e-02	5.7	5.7	2.5	2.5	-32.2	-2.8	12.5	0.2	5.32e-02	2.62e-02
2407	ok	0.24	7.58e-02	1.31e-02	5.7	5.7	2.5	2.5	-24.0	-2.0	-13.0	-1.3	-0.3	-0.3
2436	ok	0.24	6.30e-02	1.19e-02	5.7	5.7	2.5	2.5	-25.2	-2.2	-10.9	-0.6	-0.1	-0.3
2483	ok	0.24	5.10e-02	1.32e-02	5.7	5.7	2.5	2.5	-31.2	-1.8	-7.6	-2.15e-03	1.94e-04	-0.3
2528	ok	0.24	0.2	2.28e-02	5.7	5.7	2.5	2.5	-46.2	1.3	3.0	3.2	0.5	-0.2
2557	ok	0.24	0.2	2.11e-02	5.7	5.7	2.5	2.5	-40.1	-2.4	9.0	2.6	0.6	-0.3
2586	ok	0.24	0.1	1.82e-02	5.7	5.7	2.5	2.5	-30.5	-1.2	10.5	1.9	0.4	-0.3
2615	ok	0.24	0.1	1.29e-02	5.7	5.7	2.5	2.5	-22.0	-3.4	-15.7	1.4	0.3	-0.3
2644	ok	0.24	5.91e-02	1.03e-02	5.7	5.7	2.5	2.5	-15.0	-1.9	-10.1	0.7	0.2	-0.2
2691	ok	0.24	5.23e-02	1.18e-02	5.7	5.7	2.5	2.5	-24.4	0.7	-7.7	-0.1	-2.82e-02	-4.07e-02
2754	ok	0.24	0.2	2.44e-02	5.7	5.7	2.5	2.5	-37.2	-2.5	3.3	-3.5	-0.7	-3.74e-02
2811	ok	0.24	0.2	1.96e-02	5.7	5.7	2.5	2.5	-29.1	-2.3	7.1	-2.7	-0.5	-0.1
2868	ok	0.24	0.1	1.80e-02	5.7	5.7	2.5	2.5	-23.8	-1.5	10.4	-2.0	-0.4	-5.98e-02
2925	ok	0.24	0.1	1.64e-02	5.7	5.7	2.5	2.5	-30.6	-4.5	-12.5	-1.7	-0.3	-0.1
2982	ok	0.24	8.36e-02	1.29e-02	5.7	5.7	2.5	2.5	-27.0	0.6	-9.6	-0.8	-0.1	-8.74e-02
3039	ok	0.24	3.07e-02	9.94e-03	5.7	5.7	2.5	2.5	-22.9	-0.4	-6.6	-6.33e-02	-6.14e-03	-7.81e-03
3084	ok	0.24	0.2	1.57e-02	5.7	5.7	2.5	2.5	-33.4	0.4	2.1	-3.3	-0.5	-0.2
3113	ok	0.24	0.2	1.61e-02	5.7	5.7	2.5	2.5	-29.9	-1.7	7.7	-2.7	-0.6	-0.3
3142	ok	0.24	0.1	1.35e-02	5.7	5.7	2.5	2.5	-24.8	-2.4	9.1	-2.0	-0.5	-0.2
3171	ok	0.24	9.66e-02	1.86e-02	5.7	5.7	2.5	2.5	-31.2	0.5	-6.2	-1.6	-0.2	-0.2
3200	ok	0.24	8.89e-02	1.54e-02	5.7	5.7	2.5	2.5	-31.2	-7.9	-14.5	-0.7	-0.2	-0.3
3247	ok	0.24	7.85e-02	7.33e-03	5.7	5.7	2.5	2.5	-13.9	-6.0	-6.7	1.72e-02	-7.00e-03	-0.3
3292	ok	0.24	0.2	1.37e-02	5.7	5.7	2.5	2.5	-23.5	-0.3	-3.6	3.9	0.6	-0.1
3321	ok	0.24	0.2	1.53e-02	5.7	5.7	2.5	2.5	-24.0	-0.6	-7.1	2.8	0.6	-0.2
3350	ok	0.24	0.1	1.34e-02	5.7	5.7	2.5	2.5	-13.6	-0.7	-6.7	1.9	0.4	-0.3
3379	ok	0.24	8.81e-02	9.41e-03	5.7	5.7	2.5	2.5	-13.2	-1.0	10.9	1.2	0.2	-0.3
3408	ok	0.24	7.49e-02	8.89e-03	5.7	5.7	2.5	2.5	-14.5	-3.8	-11.4	0.1	0.1	-0.3
3455	ok	0.24	4.36e-02	6.50e-03	5.7	5.7	2.5	2.5	-9.9	1.2	-3.2	-0.1	-2.77e-02	-4.24e-02
3524	ok	0.24	0.2	1.21e-02	5.7	5.7	2.5	2.5	-23.8	-2.9	-3.7	0.3	3.49e-02	2.06e-02
3581	ok	0.24	0.2	1.60e-02	5.7	5.7	2.5	2.5	-26.3	-2.3	-9.6	2.9	0.7	5.32e-03
3638	ok	0.24	0.1	1.11e-02	5.7	5.7	2.5	2.5	-12.3	-2.4	-5.6	2.0	0.5	-4.69e-02
3695	ok	0.24	8.55e-02	9.05e-03	5.7	5.7	2.5	2.5	-12.3	-1.6	12.2	1.3	0.2	-0.1
3752	ok	0.24	4.85e-02	7.52e-03	5.7	5.7	2.5	2.5	-12.9	-1.2	-9.8	0.6	9.80e-02	-6.15e-02
3809	ok	0.24	4.40e-02	3.54e-03	5.7	5.7	2.5	2.5	-6.5	1.0	-2.1	-5.14e-02	-1.16e-02	-7.79e-03
3884	ok	0.24	0.1	1.12e-02	5.7	5.7	2.5	2.5	5.8	-20.1	0.5	-5.38e-02	2.89e-04	2.77e-02
3913	ok	0.24	0.2	1.94e-02	5.7	5.7	2.5	2.5	-39.2	3.3	-13.6	1.1	0.5	-0.2
3942	ok	0.24	0.1	1.21e-02	5.7	5.7	2.5	2.5	-9.5	-2.5	3.5	1.7	0.4	0.3
3971	ok	0.24	0.1	5.78e-03	5.7	5.7	2.5	2.5	-6.1	3.6	8.7	0.9	0.2	0.3
4000	ok	0.24	4.76e-02	5.90e-03	5.7	5.7	2.5	2.5	-14.3	0.9	-2.0	-0.4	-9.12e-02	-0.2
4047	ok	0.24	4.23e-02	2.66e-03	5.7	5.7	2.5	2.5	-2.0	2.1	-5.9	-0.1	-2.96e-02	0.2
4395	ok	0.24	0.2	0.0	5.7	5.7	2.5	2.5	25.2	22.1	-14.7	9.20e-02	-2.75e-03	-2.44e-02
4424	ok	0.24	0.5	6.18e-02	5.7	5.7	2.5	2.5	-132.2	-49.2	-17.7	7.1	1.8	-0.5
4453	ok	0.24	0.3	1.25e-02	5.7	5.7	2.5	2.5	80.7	6.7	-6.5	2.8	0.8	-2.37e-02
4482	ok	0.24	0.1	5.73e-03	5.7	5.7	2.5	2.5	-10.6	-2.8	6.3	1.8	0.3	3.16e-02
4511	ok	0.24	4.80e-02	3.99e-03	5.7	5.7	2.5	2.5	-1.2	2.5	-3.2	-0.5	-0.1	8.70e-02
4558	ok	0.24	3.36e-02	2.72e-03	5.7	5.7	2.5	2.5	0.4	0.3	-3.7	0.4	6.37e-03	0.2
4734	ok	0.24	0.5	6.52e-02	5.7	5.7	2.5	2.5	-133.2	-24.1	-29.2	7.0	1.5	-1.41e-02
4793	ok	0.24	0.4	1.38e-02	5.7	5.7	2.5	2.5	84.2	15.9	9.9	2.8	0.7	0.3
4852	ok	0.24	0.2	8.00e-03	5.7	5.7	2.5	2.5	-10.1	1.1	12.6	1.8	0.4	0.1
4911	ok	0.24	4.78e-02	5.29e-03	5.7	5.7	2.5	2.5	-4.4	0.5	-4.9	-0.5	-0.2	-8.80e-02
4970	ok	0.24	3.12e-02	1.10e-03	5.7	5.7	2.5	2.5	0.2	2.4	-2.7	0.4	-6.74e-02	6.13e-03

Nodo	**x/d**	**V N/M**	**ver. rid**	**Af pr-**	**Af pr+**	**Af sec-**	**Af sec+**	**N z**	**N o**	**N zo**	**M z**	**M o**	**M zo**
								-482.22	-84.34	-29.20	-3.62	-0.82	-0.46
	0.24	0.81	0.21	5.65	5.65	2.51	2.51	84.17	22.07	118.52	7.14	1.76	0.33

Nodo	**Stato**	**Max tau** daN/cm2	**Ver V pr**	**Ver V sec**	**Af V pr**	**Af V sec**	**V pr** kN/ m	**V sec** kN/ m
392	ok	1.83						
451	ok	1.47						
510	ok	0.95						
569	ok	0.64						
628	ok	0.43						
687	ok	0.83						
792	ok	2.01						
821	ok	1.44						
850	ok	1.10						
879	ok	0.68						
908	ok	0.53						
955	ok	0.81						
1000	ok	2.01						
1029	ok	1.33						
1058	ok	1.10						
1087	ok	0.65						
1116	ok	0.41						

1163	ok	0.49						
1226	ok	1.79						
1283	ok	1.34						
1340	ok	0.94						
1397	ok	0.64						
1454	ok	0.35						
1511	ok	0.49						
1556	ok	1.93						
1585	ok	1.36						
1614	ok	1.07						
1643	ok	0.67						
1672	ok	0.40						
1719	ok	0.40						
1764	ok	1.93						
1793	ok	1.35						
1822	ok	1.07						
1851	ok	0.65						
1880	ok	0.41						
1927	ok	0.44						
1990	ok	1.79						
2047	ok	1.35						
2104	ok	0.95						
2161	ok	0.67						
2218	ok	0.38						
2275	ok	0.44						
2320	ok	1.95						
2349	ok	1.37						
2378	ok	1.08						
2407	ok	0.70						
2436	ok	0.42						
2483	ok	0.40						
2528	ok	1.95						
2557	ok	1.38						
2586	ok	1.08						
2615	ok	0.71						
2644	ok	0.49						
2691	ok	0.48						
2754	ok	1.95						
2811	ok	1.37						
2868	ok	0.99						
2925	ok	0.98						
2982	ok	0.81						
3039	ok	0.55						
3084	ok	2.08						
3113	ok	1.38						
3142	ok	1.13						
3171	ok	1.02						
3200	ok	0.83						
3247	ok	0.56						
3292	ok	2.08						
3321	ok	1.41						
3350	ok	1.14						
3379	ok	0.59						
3408	ok	0.43						
3455	ok	0.45						
3524	ok	2.03						
3581	ok	2.04						
3638	ok	1.72						
3695	ok	0.81						
3752	ok	0.39						
3809	ok	0.47						
3884	ok	0.85						
3913	ok	2.64						
3942	ok	1.72						
3971	ok	0.82						
4000	ok	0.39						
4047	ok	0.22						
4395	ok	1.12						
4424	ok Av	6.83	0.31	0.04	7.7	1.0	74.5	9.8
4453	ok	1.77						
4482	ok	1.02						
4511	ok	0.38						
4558	ok	0.70						
4734	ok Av	6.97	0.31	0.10	7.7	2.4	74.6	23.0
4793	ok	1.27						
4852	ok	0.96						
4911	ok	0.29						
4970	ok	0.74						

Nodo	Max tau	Ver V pr	Ver V sec	Af V pr	Af V sec	V pr	V sec
	6.97	0.31	0.10	7.70	2.38	74.58	23.02

Macro Setto	Spessore	Id Materiale	Id Criterio	Progettazione
	cm			
23	15.00	1	1	Singolo elemento NON DISSIPATIVO

Nodo	Stato	x/d	V N/M	ver. rid	Af pr-	Af pr+	Af sec-	Af sec+	N z	N o	N zo	M z	M o	M zo
									kN/ m	kN/ m	kN/ m	kN	kN	kN
394	ok	0.24	0.5	0.2	5.7	5.7	2.5	2.5	-516.7	-90.2	127.7	9.52e-02	4.03e-02	3.42e-02
453	ok	0.24	0.5	4.38e-02	5.7	5.7	2.5	2.5	-91.1	-23.6	4.4	-3.6	-0.8	7.93e-02
512	ok	0.24	0.2	3.12e-02	5.7	5.7	2.5	2.5	-68.8	-19.7	-22.5	-2.7	-0.6	4.94e-02
571	ok	0.24	0.2	2.32e-02	5.7	5.7	2.5	2.5	-54.5	-10.1	12.8	-1.7	-0.4	7.12e-02
630	ok	0.24	0.1	2.25e-02	5.7	5.7	2.5	2.5	-41.7	-9.2	-5.3	-0.9	-0.2	6.59e-02
689	ok	0.24	5.28e-02	3.06e-02	5.7	5.7	2.5	2.5	-54.1	-14.9	-16.8	-0.1	3.20e-02	3.80e-02
793	ok	0.24	0.8	0.2	5.7	5.7	2.5	2.5	-438.1	-58.0	79.0	0.3	7.53e-02	9.96e-03
822	ok	0.24	0.5	5.22e-02	5.7	5.7	2.5	2.5	-87.2	9.5	-1.7	-3.5	-0.8	-0.2
851	ok	0.24	0.2	2.93e-02	5.7	5.7	2.5	2.5	-67.6	19.5	-8.5	-2.6	-0.6	-0.2
880	ok	0.24	0.1	2.21e-02	5.7	5.7	2.5	2.5	-55.5	-8.6	0.5	-1.7	-0.3	-0.2
909	ok	0.24	6.16e-02	2.06e-02	5.7	5.7	2.5	2.5	-39.8	-5.2	5.5	-0.8	-0.2	-0.2
957	ok	0.24	7.00e-02	2.50e-02	5.7	5.7	2.5	2.5	-52.3	-13.2	-8.9	-5.58e-03	0.1	-0.2
1001	ok	0.24	0.3	0.1	5.7	5.7	2.5	2.5	-256.3	-30.5	45.6	0.1	2.53e-02	3.14e-02
1030	ok	0.24	0.2	4.63e-02	5.7	5.7	2.5	2.5	-87.7	-41.3	43.3	-0.2	-5.25e-02	1.85e-02
1059	ok	0.24	0.2	3.07e-02	5.7	5.7	2.5	2.5	-47.3	7.0	-8.2	1.9	0.4	-0.3
1088	ok	0.24	0.1	2.20e-02	5.7	5.7	2.5	2.5	-50.1	-4.4	-6.9	1.2	0.3	-0.3
1117	ok	0.24	6.11e-02	2.10e-02	5.7	5.7	2.5	2.5	-45.3	-0.9	-9.8	0.6	0.1	-0.3
1165	ok	0.24	6.16e-02	1.95e-02	5.7	5.7	2.5	2.5	-48.2	0.4	-2.1	4.49e-03	7.44e-03	-0.3
1228	ok	0.24	0.3	6.72e-02	5.7	5.7	2.5	2.5	-165.1	-22.9	22.1	-0.1	-4.39e-02	9.20e-03
1285	ok	0.24	0.2	4.20e-02	5.7	5.7	2.5	2.5	-86.1	-22.1	38.0	-0.1	-2.50e-02	1.12e-02
1342	ok	0.24	0.1	2.61e-02	5.7	5.7	2.5	2.5	-55.1	-1.0	-8.4	2.0	0.4	-8.66e-02
1399	ok	0.24	6.32e-02	2.19e-02	5.7	5.7	2.5	2.5	-53.7	-4.0	-6.9	1.3	0.3	-0.1
1456	ok	0.24	4.50e-02	2.05e-02	5.7	5.7	2.5	2.5	-39.2	-3.5	-11.3	-0.6	-0.1	-8.60e-02
1513	ok	0.24	2.69e-02	1.87e-02	5.7	5.7	2.5	2.5	-45.9	-1.2	-6.6	-7.92e-02	-1.02e-02	-9.82e-02
1557	ok	0.24	0.2	4.60e-02	5.7	5.7	2.5	2.5	-114.2	-4.3	11.3	0.3	7.00e-02	1.57e-02
1586	ok	0.24	0.1	3.40e-02	5.7	5.7	2.5	2.5	-76.4	-14.2	24.1	0.3	5.77e-02	2.88e-02
1615	ok	0.24	0.1	2.29e-02	5.7	5.7	2.5	2.5	-37.6	-15.6	17.2	-2.59e-02	-7.49e-03	3.37e-02
1644	ok	0.24	6.54e-02	1.82e-02	5.7	5.7	2.5	2.5	-41.9	-1.6	-8.3	-1.2	-0.3	-0.3
1673	ok	0.24	3.56e-02	1.72e-02	5.7	5.7	2.5	2.5	-39.9	-1.75e-02	-9.7	-0.6	-0.1	-0.2
1721	ok	0.24	2.38e-02	1.76e-02	5.7	5.7	2.5	2.5	-40.1	-8.58e-04	-8.0	-3.18e-03	1.13e-02	-0.3
1765	ok	0.24	0.2	3.80e-02	5.7	5.7	2.5	2.5	-81.5	-3.55e-02	7.0	-0.3	-7.00e-02	1.41e-02
1794	ok	0.24	0.1	3.08e-02	5.7	5.7	2.5	2.5	-71.2	-10.2	19.4	5.17e-02	1.91e-03	2.64e-02
1823	ok	0.24	9.76e-02	2.32e-02	5.7	5.7	2.5	2.5	-39.4	-11.9	17.4	-0.2	-3.65e-02	2.34e-02
1852	ok	0.24	6.91e-02	1.78e-02	5.7	5.7	2.5	2.5	-33.6	-0.9	-12.0	1.2	0.3	-0.2
1881	ok	0.24	4.81e-02	1.64e-02	5.7	5.7	2.5	2.5	-33.9	-1.03e-02	-12.5	0.6	0.1	-0.2
1929	ok	0.24	3.31e-02	1.58e-02	5.7	5.7	2.5	2.5	-35.5	0.7	-7.1	2.32e-02	-3.58e-02	-0.2
1992	ok	0.24	0.2	3.48e-02	5.7	5.7	2.5	2.5	-84.5	-9.6	1.2	-0.3	-5.91e-02	8.79e-03
2049	ok	0.24	0.1	2.78e-02	5.7	5.7	2.5	2.5	-63.9	-9.4	15.3	-0.2	-3.79e-02	1.41e-02
2106	ok	0.24	9.61e-02	2.32e-02	5.7	5.7	2.5	2.5	-39.5	-5.9	20.5	-0.1	-2.31e-02	8.90e-03
2163	ok	0.24	6.74e-02	1.80e-02	5.7	5.7	2.5	2.5	-24.7	-1.2	-14.3	-1.3	-0.3	-8.26e-02
2220	ok	0.24	5.22e-02	1.53e-02	5.7	5.7	2.5	2.5	-25.2	-2.0	-10.9	-0.6	-0.1	-8.89e-02
2277	ok	0.24	3.77e-02	1.42e-02	5.7	5.7	2.5	2.5	-35.0	-3.4	-4.4	8.15e-02	9.95e-03	-9.69e-02
2321	ok	0.24	0.2	2.59e-02	5.7	5.7	2.5	2.5	-63.9	-0.2	4.0	0.4	7.04e-02	1.62e-02
2350	ok	0.24	0.1	2.47e-02	5.7	5.7	2.5	2.5	-51.8	-4.6	12.0	0.3	6.17e-02	2.87e-02
2379	ok	0.24	0.1	1.94e-02	5.7	5.7	2.5	2.5	-34.5	-3.0	12.8	0.2	4.63e-02	2.42e-02
2408	ok	0.24	7.38e-02	1.39e-02	5.7	5.7	2.5	2.5	-25.0	-2.3	-13.0	-1.3	-0.2	-0.2
2437	ok	0.24	6.18e-02	1.19e-02	5.7	5.7	2.5	2.5	-25.4	-2.5	-10.7	-0.6	-0.1	-0.2
2485	ok	0.24	5.11e-02	1.32e-02	5.7	5.7	2.5	2.5	-31.3	-1.8	-7.3	3.75e-03	7.15e-03	-0.2
2529	ok	0.24	0.2	2.49e-02	5.7	5.7	2.5	2.5	-49.5	1.4	3.1	3.3	0.5	-0.2
2558	ok	0.24	0.1	2.30e-02	5.7	5.7	2.5	2.5	-43.0	-2.5	9.4	2.7	0.6	-0.3
2587	ok	0.24	9.94e-02	1.97e-02	5.7	5.7	2.5	2.5	-32.5	-1.4	10.9	1.9	0.4	-0.2
2616	ok	0.24	0.1	1.37e-02	5.7	5.7	2.5	2.5	-22.8	-3.6	-16.0	1.4	0.3	-0.3
2645	ok	0.24	5.94e-02	1.05e-02	5.7	5.7	2.5	2.5	-14.8	-2.3	-9.9	0.7	0.2	-0.2
2693	ok	0.24	5.28e-02	1.18e-02	5.7	5.7	2.5	2.5	-24.8	0.8	-7.5	-0.1	-1.62e-02	-4.12e-02
2756	ok	0.24	0.2	2.63e-02	5.7	5.7	2.5	2.5	-39.9	-2.6	3.8	-3.5	-0.7	-3.16e-02
2813	ok	0.24	0.1	2.16e-02	5.7	5.7	2.5	2.5	-31.1	-1.8	7.1	-2.8	-0.6	-0.1
2870	ok	0.24	0.1	1.94e-02	5.7	5.7	2.5	2.5	-32.6	-3.1	12.5	2.0	0.4	-7.30e-02
2927	ok	0.24	0.1	1.86e-02	5.7	5.7	2.5	2.5	-33.8	-5.2	-14.1	-1.6	-0.3	-0.1
2984	ok	0.24	8.53e-02	1.32e-02	5.7	5.7	2.5	2.5	-27.6	0.9	-10.1	-0.8	-0.1	-9.76e-02
3041	ok	0.24	3.42e-02	1.02e-02	5.7	5.7	2.5	2.5	-16.0	-0.5	-11.8	7.46e-02	-6.13e-03	-6.81e-02
3085	ok	0.24	0.2	1.78e-02	5.7	5.7	2.5	2.5	-36.1	0.2	2.6	-3.4	-0.5	-0.2
3114	ok	0.24	0.2	1.86e-02	5.7	5.7	2.5	2.5	-33.4	-1.1	6.4	-2.7	-0.4	-0.3
3143	ok	0.24	0.1	1.51e-02	5.7	5.7	2.5	2.5	-12.6	2.4	-15.9	-1.9	-0.3	-0.2
3172	ok	0.24	9.26e-02	1.87e-02	5.7	5.7	2.5	2.5	-32.1	1.2	-7.2	-1.5	-0.2	-0.2

3201	ok	0.24	8.58e-02	1.63e-02	5.7	5.7	2.5	2.5	-32.3	-8.8	-15.5	-0.7	-0.2	-0.3
3249	ok	0.24	8.12e-02	7.55e-03	5.7	5.7	2.5	2.5	-13.5	-5.3	-4.0	-1.09e-02	-2.25e-02	-0.3
3293	ok	0.24	0.2	1.55e-02	5.7	5.7	2.5	2.5	-31.4	-3.83e-02	-0.3	5.57e-02	3.20e-03	-1.17e-02
3322	ok	0.24	0.2	1.85e-02	5.7	5.7	2.5	2.5	-29.3	0.2	-7.8	2.6	0.6	-0.2
3351	ok	0.24	0.1	1.53e-02	5.7	5.7	2.5	2.5	-16.8	-0.3	-8.7	1.9	0.4	-0.3
3380	ok	0.24	9.03e-02	9.30e-03	5.7	5.7	2.5	2.5	-11.2	-3.4	11.7	-0.1	-2.54e-02	2.62e-02
3409	ok	0.24	7.43e-02	9.24e-03	5.7	5.7	2.5	2.5	-14.8	-3.8	-12.1	0.1	0.1	-0.3
3457	ok	0.24	4.51e-02	6.72e-03	5.7	5.7	2.5	2.5	-13.8	0.4	-2.4	-9.85e-03	-8.03e-02	-0.3
3526	ok	0.24	0.2	1.24e-02	5.7	5.7	2.5	2.5	-24.9	-2.8	-2.5	0.2	2.03e-02	5.54e-03
3583	ok	0.24	0.1	2.11e-02	5.7	5.7	2.5	2.5	-35.3	-1.6	-12.6	-2.3	-0.4	6.51e-02
3640	ok	0.24	0.1	1.26e-02	5.7	5.7	2.5	2.5	-15.0	-2.9	-8.4	2.0	0.5	-8.22e-02
3697	ok	0.24	8.74e-02	8.80e-03	5.7	5.7	2.5	2.5	-3.0	-2.8	7.3	-9.67e-02	-1.69e-02	-9.13e-03
3754	ok	0.24	5.09e-02	7.58e-03	5.7	5.7	2.5	2.5	-12.9	-1.3	-10.0	0.6	9.39e-02	-6.18e-02
3811	ok	0.24	4.31e-02	3.91e-03	5.7	5.7	2.5	2.5	-6.8	1.7	-2.2	-4.44e-02	-9.70e-03	-7.35e-03
3885	ok	0.24	0.1	1.81e-02	5.7	5.7	2.5	2.5	11.0	-32.2	1.8	-2.78e-02	1.19e-04	1.33e-02
3914	ok	0.24	0.2	3.04e-02	5.7	5.7	2.5	2.5	-62.3	7.7	-21.4	1.3	0.6	-0.2
3943	ok	0.24	0.2	2.26e-02	5.7	5.7	2.5	2.5	15.3	-18.3	-26.2	1.4	0.6	-0.2
3972	ok	0.24	0.1	5.65e-03	5.7	5.7	2.5	2.5	-6.3	-5.5	7.7	-0.9	-0.2	-0.2
4001	ok	0.24	4.95e-02	6.15e-03	5.7	5.7	2.5	2.5	-14.7	0.8	-2.2	-0.4	-8.88e-02	-0.2
4049	ok	0.24	4.62e-02	2.78e-03	5.7	5.7	2.5	2.5	-2.6	2.5	-6.0	1.46e-02	1.77e-02	-2.64e-02
4396	ok	0.24	0.3	0.0	5.7	5.7	2.5	2.5	42.8	34.1	-23.4	3.43e-02	-8.31e-03	-6.12e-03
4425	ok	0.24	0.4	0.1	5.7	5.7	2.5	2.5	-214.8	-76.2	-31.5	8.1	1.9	-0.4
4454	ok	0.24	0.4	1.44e-02	5.7	5.7	2.5	2.5	33.8	5.6	16.0	2.7	0.5	0.2
4483	ok	0.24	0.1	5.15e-03	5.7	5.7	2.5	2.5	-8.1	-4.2	4.9	1.7	0.3	3.44e-02
4512	ok	0.24	4.84e-02	4.15e-03	5.7	5.7	2.5	2.5	-1.2	2.8	-3.4	-0.5	-0.1	8.28e-02
4560	ok	0.24	3.37e-02	2.91e-03	5.7	5.7	2.5	2.5	0.4	0.6	-4.2	0.4	5.91e-03	0.2
4736	ok	0.24	0.4	0.1	5.7	5.7	2.5	2.5	-220.2	-43.9	-51.4	8.0	1.7	0.2
4795	ok	0.24	0.5	1.67e-02	5.7	5.7	2.5	2.5	33.8	17.7	-0.8	2.8	0.6	0.3
4854	ok	0.24	0.2	8.54e-03	5.7	5.7	2.5	2.5	-6.2	1.7	15.0	1.8	0.4	0.1
4913	ok	0.24	4.97e-02	5.53e-03	5.7	5.7	2.5	2.5	-4.4	0.1	-5.5	-0.5	-0.2	-9.10e-02
4972	ok	0.24	3.24e-02	1.63e-03	5.7	5.7	2.5	2.5	1.0	2.3	-3.1	0.4	-6.85e-02	5.72e-03

Nodo	**x/d**	**V N/M**	**ver. rid**	**Af pr-**	**Af pr+**	**Af sec-**	**Af sec+**	**N z**	**N o**	**N zo**	**M z**	**M o**	**M zo**
								-516.66	-90.20	-51.41	-3.62	-0.81	-0.39
	0.24	0.81	0.22	5.65	5.65	2.51	2.51	42.79	34.08	127.68	8.05	1.91	0.31

Nodo	**Stato**	**Max tau** daN/cm2	**Ver V pr**	**Ver V sec**	**Af V pr**	**Af V sec**	**V pr** kN/ m	**V sec** kN/ m
394	ok	1.82						
453	ok	1.47						
512	ok	0.95						
571	ok	0.65						
630	ok	0.43						
689	ok	0.83						
793	ok	2.00						
822	ok	1.44						
851	ok	1.10						
880	ok	0.68						
909	ok	0.53						
957	ok	0.80						
1001	ok	2.00						
1030	ok	1.32						
1059	ok	1.09						
1088	ok	0.65						
1117	ok	0.40						
1165	ok	0.49						
1228	ok	1.79						
1285	ok	1.33						
1342	ok	0.95						
1399	ok	0.64						
1456	ok	0.35						
1513	ok	0.49						
1557	ok	1.92						
1586	ok	1.35						
1615	ok	1.07						
1644	ok	0.67						
1673	ok	0.40						
1721	ok	0.39						
1765	ok	1.92						
1794	ok	1.34						
1823	ok	1.07						
1852	ok	0.65						
1881	ok	0.41						
1929	ok	0.43						
1992	ok	1.79						
2049	ok	1.34						
2106	ok	0.95						

2163	ok	0.66						
2220	ok	0.37						
2277	ok	0.44						
2321	ok	1.94						
2350	ok	1.36						
2379	ok	1.08						
2408	ok	0.69						
2437	ok	0.41						
2485	ok	0.42						
2529	ok	1.94						
2558	ok	1.37						
2587	ok	1.08						
2616	ok	0.70						
2645	ok	0.48						
2693	ok	0.52						
2756	ok	1.90						
2813	ok	1.35						
2870	ok	0.98						
2927	ok	0.97						
2984	ok	0.81						
3041	ok	0.56						
3085	ok	2.03						
3114	ok	1.36						
3143	ok	1.13						
3172	ok	1.02						
3201	ok	0.83						
3249	ok	0.56						
3293	ok	2.03						
3322	ok	1.37						
3351	ok	1.12						
3380	ok	0.58						
3409	ok	0.43						
3457	ok	0.45						
3526	ok	1.98						
3583	ok	2.03						
3640	ok	1.73						
3697	ok	0.80						
3754	ok	0.39						
3811	ok	0.48						
3885	ok	0.84						
3914	ok	2.59						
3943	ok	1.73						
3972	ok	0.82						
4001	ok	0.39						
4049	ok	0.21						
4396	ok	1.09						
4425	ok Av	6.67	0.30	0.04	7.5	0.9	72.8	9.1
4454	ok	1.77						
4483	ok	1.02						
4512	ok	0.37						
4560	ok	0.69						
4736	ok Av	6.87	0.30	0.09	7.5	2.2	72.8	21.8
4795	ok	1.21						
4854	ok	0.96						
4913	ok	0.29						
4972	ok	0.73						
Nodo		**Max tau**	**Ver V pr**	**Ver V sec**	**Af V pr**	**Af V sec**	**V pr**	**V sec**
		6.87	0.30	0.09	7.51	2.25	72.76	21.79

Macro Setto	Spessore	Id Materiale	Id Criterio	Progettazione
	cm			
24	15.00	1	1	Singolo elemento NON DISSIPATIVO

Nodo	Stato	x/d	V N/M	ver. rid	Af pr-	Af pr+	Af sec-	Af sec+	N z	N o	N zo	M z	M o	M zo
									kN/ m	kN/ m	kN/ m	kN	kN	kN
396	ok	0.24	0.5	0.2	5.7	5.7	2.5	2.5	-532.3	-92.9	131.9	0.3	5.42e-02	3.84e-03
455	ok	0.24	0.5	4.36e-02	5.7	5.7	2.5	2.5	-92.4	-23.8	5.0	-3.6	-0.8	7.02e-02
514	ok	0.24	0.2	3.12e-02	5.7	5.7	2.5	2.5	-68.8	-19.6	-22.6	-2.7	-0.6	4.73e-02
573	ok	0.24	0.2	2.33e-02	5.7	5.7	2.5	2.5	-54.6	-10.0	12.9	-1.7	-0.4	6.98e-02
632	ok	0.24	0.1	2.25e-02	5.7	5.7	2.5	2.5	-41.8	-9.2	-5.3	-0.8	-0.2	6.55e-02
691	ok	0.24	5.29e-02	3.06e-02	5.7	5.7	2.5	2.5	-54.3	-14.9	-18.6	-0.1	3.63e-02	3.84e-02
794	ok	0.24	0.8	0.2	5.7	5.7	2.5	2.5	-448.5	-58.6	80.6	0.4	7.94e-02	1.50e-02

823	ok	0.24	0.5	5.50e-02	5.7	5.7	2.5	2.5	-88.6	8.8	-0.9	-3.5	-0.7	-0.2
852	ok	0.24	0.2	2.95e-02	5.7	5.7	2.5	2.5	-68.1	19.4	-8.4	-2.6	-0.6	-0.2
881	ok	0.24	0.1	2.22e-02	5.7	5.7	2.5	2.5	-55.7	-8.7	0.6	-1.7	-0.3	-0.2
910	ok	0.24	6.23e-02	2.06e-02	5.7	5.7	2.5	2.5	-39.9	-5.3	5.5	-0.8	-0.2	-0.2
959	ok	0.24	7.04e-02	2.51e-02	5.7	5.7	2.5	2.5	-52.6	-13.2	-10.7	3.95e-03	0.1	-0.2
1002	ok	0.24	0.3	0.1	5.7	5.7	2.5	2.5	-262.3	-30.9	46.4	0.1	2.64e-02	4.05e-02
1031	ok	0.24	0.2	4.76e-02	5.7	5.7	2.5	2.5	-90.0	-42.3	44.9	-0.2	-5.45e-02	2.52e-02
1060	ok	0.24	0.2	3.10e-02	5.7	5.7	2.5	2.5	-71.9	1.7	1.3	-0.3	-8.23e-02	-0.4
1089	ok	0.24	0.1	2.22e-02	5.7	5.7	2.5	2.5	-50.4	-4.6	-6.6	1.2	0.3	-0.3
1118	ok	0.24	6.03e-02	2.10e-02	5.7	5.7	2.5	2.5	-45.5	-1.0	-9.8	0.6	0.1	-0.3
1167	ok	0.24	6.18e-02	1.96e-02	5.7	5.7	2.5	2.5	-48.4	0.3	-2.1	4.65e-03	7.06e-03	-0.3
1230	ok	0.24	0.3	6.87e-02	5.7	5.7	2.5	2.5	-168.7	-23.2	22.6	-0.2	-4.69e-02	1.22e-02
1287	ok	0.24	0.2	4.32e-02	5.7	5.7	2.5	2.5	-88.3	-22.5	39.4	-0.1	-2.55e-02	1.22e-02
1344	ok	0.24	0.1	2.68e-02	5.7	5.7	2.5	2.5	-56.0	-1.2	-7.9	2.0	0.4	-8.63e-02
1401	ok	0.24	6.27e-02	2.20e-02	5.7	5.7	2.5	2.5	-54.2	-4.2	-6.5	1.3	0.3	-0.1
1458	ok	0.24	4.42e-02	2.05e-02	5.7	5.7	2.5	2.5	-47.6	-1.3	-6.1	0.6	0.1	-9.53e-02
1515	ok	0.24	2.71e-02	1.88e-02	5.7	5.7	2.5	2.5	-46.1	-1.3	-6.7	-7.90e-02	-1.22e-02	-9.74e-02
1558	ok	0.24	0.2	4.71e-02	5.7	5.7	2.5	2.5	-117.1	-4.4	11.5	0.3	7.10e-02	1.23e-02
1587	ok	0.24	0.1	3.49e-02	5.7	5.7	2.5	2.5	-78.5	-14.4	24.8	0.3	5.93e-02	2.66e-02
1616	ok	0.24	0.1	2.36e-02	5.7	5.7	2.5	2.5	-38.6	-16.1	17.8	-2.85e-02	-7.37e-03	3.17e-02
1645	ok	0.24	6.52e-02	1.84e-02	5.7	5.7	2.5	2.5	-42.4	-1.7	-8.2	-1.2	-0.3	-0.3
1674	ok	0.24	3.52e-02	1.73e-02	5.7	5.7	2.5	2.5	-40.2	-6.30e-02	-9.7	-0.6	-0.1	-0.2
1723	ok	0.24	2.37e-02	1.76e-02	5.7	5.7	2.5	2.5	-40.2	-2.02e-02	-8.0	-3.98e-03	9.19e-03	-0.3
1766	ok	0.24	0.2	3.90e-02	5.7	5.7	2.5	2.5	-97.2	-4.0	8.0	8.04e-02	1.88e-02	4.09e-02
1795	ok	0.24	0.1	3.17e-02	5.7	5.7	2.5	2.5	-73.2	-10.4	20.0	5.86e-02	4.98e-03	2.40e-02
1824	ok	0.24	9.57e-02	2.38e-02	5.7	5.7	2.5	2.5	-40.5	-12.2	18.0	-0.2	-3.50e-02	2.15e-02
1853	ok	0.24	6.70e-02	1.80e-02	5.7	5.7	2.5	2.5	-34.1	-1.0	-11.9	1.2	0.3	-0.2
1882	ok	0.24	4.74e-02	1.65e-02	5.7	5.7	2.5	2.5	-34.2	-6.85e-02	-12.4	0.6	0.1	-0.2
1931	ok	0.24	3.31e-02	1.59e-02	5.7	5.7	2.5	2.5	-35.6	0.7	-7.0	1.58e-02	-3.97e-02	-0.2
1994	ok	0.24	0.2	3.58e-02	5.7	5.7	2.5	2.5	-86.5	-9.7	1.2	-0.2	-5.43e-02	9.39e-03
2051	ok	0.24	0.1	2.86e-02	5.7	5.7	2.5	2.5	-65.7	-9.6	15.7	-0.2	-3.30e-02	1.30e-02
2108	ok	0.24	9.53e-02	2.39e-02	5.7	5.7	2.5	2.5	-40.7	-6.1	21.0	-0.1	-1.94e-02	7.71e-03
2165	ok	0.24	6.52e-02	1.84e-02	5.7	5.7	2.5	2.5	-25.2	-1.3	-14.4	-1.3	-0.3	-8.19e-02
2222	ok	0.24	5.16e-02	1.54e-02	5.7	5.7	2.5	2.5	-25.4	-2.1	-11.0	-0.6	-0.1	-8.85e-02
2279	ok	0.24	3.80e-02	1.43e-02	5.7	5.7	2.5	2.5	-35.2	-3.5	-4.4	8.40e-02	8.72e-03	-9.60e-02
2322	ok	0.24	0.2	2.69e-02	5.7	5.7	2.5	2.5	-65.8	-0.2	4.0	0.4	7.21e-02	1.26e-02
2351	ok	0.24	0.1	2.55e-02	5.7	5.7	2.5	2.5	-53.5	-4.7	12.1	0.3	6.21e-02	2.62e-02
2380	ok	0.24	0.1	2.01e-02	5.7	5.7	2.5	2.5	-35.7	-3.1	12.9	0.2	4.63e-02	2.19e-02
2409	ok	0.24	7.11e-02	1.42e-02	5.7	5.7	2.5	2.5	-25.5	-2.4	-13.1	-1.2	-0.2	-0.2
2438	ok	0.24	6.12e-02	1.21e-02	5.7	5.7	2.5	2.5	-25.6	-2.6	-10.8	-0.6	-0.1	-0.2
2487	ok	0.24	5.06e-02	1.33e-02	5.7	5.7	2.5	2.5	-27.8	-1.4	-7.5	2.17e-02	3.42e-03	-0.3
2530	ok	0.24	0.2	2.58e-02	5.7	5.7	2.5	2.5	-51.3	1.4	3.2	3.2	0.5	-0.2
2559	ok	0.24	0.1	2.39e-02	5.7	5.7	2.5	2.5	-44.5	-2.5	9.4	2.6	0.6	-0.3
2588	ok	0.24	9.74e-02	2.03e-02	5.7	5.7	2.5	2.5	-33.6	-1.5	10.9	1.9	0.4	-0.2
2617	ok	0.24	9.85e-02	1.41e-02	5.7	5.7	2.5	2.5	-23.3	-3.7	-16.2	1.3	0.3	-0.3
2646	ok	0.24	5.95e-02	1.10e-02	5.7	5.7	2.5	2.5	-9.9	-2.5	-9.9	0.7	0.2	-0.2
2695	ok	0.24	5.26e-02	1.19e-02	5.7	5.7	2.5	2.5	-27.9	-0.7	-7.3	2.07e-02	-4.21e-02	-0.3
2758	ok	0.24	0.2	2.73e-02	5.7	5.7	2.5	2.5	-41.7	-2.7	3.9	-3.5	-0.7	-3.11e-02
2815	ok	0.24	0.1	2.25e-02	5.7	5.7	2.5	2.5	-32.7	-1.9	7.0	-2.8	-0.6	-0.1
2872	ok	0.24	0.1	2.00e-02	5.7	5.7	2.5	2.5	-33.7	-3.3	12.5	2.0	0.4	-7.17e-02
2929	ok	0.24	0.1	1.94e-02	5.7	5.7	2.5	2.5	-34.8	-5.5	-14.6	-1.6	-0.3	-0.1
2986	ok	0.24	8.65e-02	1.32e-02	5.7	5.7	2.5	2.5	-27.8	0.9	-10.2	-0.8	-0.1	-9.56e-02
3043	ok	0.24	3.50e-02	1.03e-02	5.7	5.7	2.5	2.5	-16.3	-0.6	-12.0	7.03e-02	-6.65e-03	-6.65e-02
3086	ok	0.24	0.2	1.88e-02	5.7	5.7	2.5	2.5	-38.0	0.2	2.7	-3.3	-0.5	-0.2
3115	ok	0.24	0.2	1.95e-02	5.7	5.7	2.5	2.5	-35.1	-1.1	6.4	-2.7	-0.4	-0.3
3144	ok	0.24	0.1	1.57e-02	5.7	5.7	2.5	2.5	-13.3	2.3	-16.5	-1.9	-0.3	-0.2
3173	ok	0.24	9.20e-02	1.87e-02	5.7	5.7	2.5	2.5	-32.2	1.3	-7.4	-1.5	-0.2	-0.2
3202	ok	0.24	8.40e-02	1.66e-02	5.7	5.7	2.5	2.5	-32.7	-8.9	-15.8	-0.7	-0.2	-0.3
3251	ok	0.24	8.10e-02	7.62e-03	5.7	5.7	2.5	2.5	-13.6	-5.3	-4.1	-1.20e-02	-2.30e-02	-0.3
3294	ok	0.24	0.2	1.64e-02	5.7	5.7	2.5	2.5	-33.3	-2.60e-02	-0.1	8.50e-02	5.31e-03	-1.38e-02
3323	ok	0.24	0.1	1.98e-02	5.7	5.7	2.5	2.5	-39.8	0.7	3.2	7.05e-02	1.82e-02	-1.06e-02
3352	ok	0.24	0.1	1.60e-02	5.7	5.7	2.5	2.5	-24.6	-2.3	6.6	5.74e-02	3.78e-02	-0.3
3381	ok	0.24	9.05e-02	9.35e-03	5.7	5.7	2.5	2.5	-11.2	-3.7	11.7	-0.1	-2.14e-02	2.26e-02
3410	ok	0.24	7.39e-02	9.30e-03	5.7	5.7	2.5	2.5	-15.0	-3.8	-12.2	0.1	0.1	-0.3
3459	ok	0.24	4.63e-02	6.80e-03	5.7	5.7	2.5	2.5	-14.0	0.4	-2.4	-1.06e-02	-8.43e-02	-0.3
3528	ok	0.24	0.2	1.30e-02	5.7	5.7	2.5	2.5	-26.1	-2.9	-2.2	0.3	3.25e-02	1.38e-02
3585	ok	0.24	0.1	2.30e-02	5.7	5.7	2.5	2.5	-36.8	-1.3	-13.1	-2.4	-0.4	7.01e-02
3642	ok	0.24	0.1	1.32e-02	5.7	5.7	2.5	2.5	-4.9	-1.5	-14.8	-1.8	-0.3	-0.1
3699	ok	0.24	8.83e-02	8.76e-03	5.7	5.7	2.5	2.5	-5.2	-1.8	7.3	-1.0	-0.2	-0.1
3756	ok	0.24	5.32e-02	7.60e-03	5.7	5.7	2.5	2.5	-12.9	-1.3	-10.0	0.6	9.66e-02	-6.14e-02
3813	ok	0.24	4.33e-02	4.09e-03	5.7	5.7	2.5	2.5	-6.9	1.7	-2.2	-3.55e-02	-1.37e-02	-7.15e-03
3886	ok	0.24	0.1	2.06e-02	5.7	5.7	2.5	2.5	12.8	-36.7	2.3	-4.13e-02	3.18e-04	1.27e-02
3915	ok	0.24	0.2	3.47e-02	5.7	5.7	2.5	2.5	-64.0	24.2	-14.9	-3.96e-02	2.69e-02	8.40e-03
3944	ok	0.24	0.2	2.65e-02	5.7	5.7	2.5	2.5	7.1	-11.5	-18.9	-1.6	7.03e-03	-0.3
3973	ok	0.24	0.1	5.84e-03	5.7	5.7	2.5	2.5	-6.0	-5.9	8.1	-0.9	-0.2	-0.2
4002	ok	0.24	5.10e-02	6.35e-03	5.7	5.7	2.5	2.5	-15.1	0.7	-2.1	-0.4	-8.65e-02	-0.2
4051	ok	0.24	4.85e-02	2.84e-03	5.7	5.7	2.5	2.5	-2.6	2.8	-6.2	1.36e-02	1.23e-02	-2.62e-02
4397	ok	0.24	0.3	0.0	5.7	5.7	2.5	2.5	49.3	38.5	-26.6	-3.23e-02	-4.66e-02	2.02e-02
4426	ok	0.24	0.4	0.1	5.7	5.7	2.5	2.5	-243.1	-91.3	-29.7	0.3	8.75e-02	-6.43e-02

4455	ok	0.24	0.5	1.37e-02	5.7	5.7	2.5	2.5	141.3	7.5	-2.9	0.1	2.41e-02	2.81e-02
4484	ok	0.24	0.1	5.03e-03	5.7	5.7	2.5	2.5	-6.2	-3.9	3.4	0.3	4.62e-02	4.50e-03
4513	ok	0.24	4.87e-02	4.26e-03	5.7	5.7	2.5	2.5	-1.2	2.9	-3.5	-0.4	-0.1	8.05e-02
4562	ok	0.24	3.91e-02	3.00e-03	5.7	5.7	2.5	2.5	0.4	0.7	-4.4	0.3	6.68e-03	0.2
4738	ok	0.24	0.4	0.1	5.7	5.7	2.5	2.5	-253.2	-45.5	-64.2	0.4	7.83e-02	3.02e-02
4797	ok	0.24	0.6	1.58e-02	5.7	5.7	2.5	2.5	159.7	37.0	46.9	0.1	4.88e-02	8.19e-03
4856	ok	0.24	0.2	8.85e-03	5.7	5.7	2.5	2.5	-4.6	2.2	15.0	0.3	6.82e-02	2.33e-02
4915	ok	0.24	5.03e-02	5.66e-03	5.7	5.7	2.5	2.5	-4.5	0.3	-5.7	-0.5	-0.2	-8.95e-02
4974	ok	0.24	3.26e-02	1.84e-03	5.7	5.7	2.5	2.5	1.0	2.3	-3.3	0.4	-6.45e-02	6.68e-03

Nodo	**x/d**	**V N/M**	**ver. rid**	**Af pr-**	**Af pr+**	**Af sec-**	**Af sec+**	**N z**	**N o**	**N zo**	**M z**	**M o**	**M zo**
								-532.31	-92.89	-64.23	-3.59	-0.81	-0.36
	0.24	0.81	0.23	5.65	5.65	2.51	2.51	159.67	38.45	131.88	3.23	0.56	0.15

Nodo	**Stato**	**Max tau**	**Ver V pr**	**Ver V sec**	**Af V pr**	**Af V sec**	**V pr**	**V sec**
		daN/cm2					kN/ m	kN/ m
396	ok	1.77						
455	ok	1.46						
514	ok	0.95						
573	ok	0.64						
632	ok	0.43						
691	ok	0.82						
794	ok	1.97						
823	ok	1.42						
852	ok	1.09						
881	ok	0.67						
910	ok	0.53						
959	ok	0.78						
1002	ok	1.98						
1031	ok	1.31						
1060	ok	1.09						
1089	ok	0.64						
1118	ok	0.40						
1167	ok	0.48						
1230	ok	1.76						
1287	ok	1.32						
1344	ok	0.94						
1401	ok	0.64						
1458	ok	0.35						
1515	ok	0.48						
1558	ok	1.91						
1587	ok	1.34						
1616	ok	1.07						
1645	ok	0.66						
1674	ok	0.40						
1723	ok	0.39						
1766	ok	1.91						
1795	ok	1.34						
1824	ok	1.06						
1853	ok	0.65						
1882	ok	0.41						
1931	ok	0.42						
1994	ok	1.77						
2051	ok	1.33						
2108	ok	0.95						
2165	ok	0.66						
2222	ok	0.37						
2279	ok	0.44						
2322	ok	1.92						
2351	ok	1.35						
2380	ok	1.07						
2409	ok	0.68						
2438	ok	0.41						
2487	ok	0.42						
2530	ok	1.92						
2559	ok	1.36						
2588	ok	1.07						
2617	ok	0.69						
2646	ok	0.48						
2695	ok	0.51						
2758	ok	1.89						
2815	ok	1.35						
2872	ok	0.98						
2929	ok	0.97						
2986	ok	0.81						
3043	ok	0.56						
3086	ok	2.02						

3115	ok	1.36						
3144	ok	1.12						
3173	ok	1.02						
3202	ok	0.83						
3251	ok	0.56						
3294	ok	2.02						
3323	ok	1.37						
3352	ok	1.12						
3381	ok	0.58						
3410	ok	0.43						
3459	ok	0.48						
3528	ok	1.98						
3585	ok	2.07						
3642	ok	1.75						
3699	ok	0.80						
3756	ok	0.39						
3813	ok	0.47						
3886	ok	0.85						
3915	ok	2.64						
3944	ok	1.74						
3973	ok	0.82						
4002	ok	0.38						
4051	ok	0.21						
4397	ok	1.09						
4426	ok Av	6.80	0.31	0.04	7.7	0.9	74.3	8.5
4455	ok	1.76						
4484	ok	1.01						
4513	ok	0.37						
4562	ok	0.68						
4738	ok Av	7.04	0.31	0.09	7.7	2.2	74.5	21.1
4797	ok	1.19						
4856	ok	0.96						
4915	ok	0.30						
4974	ok	0.71						
Nodo		**Max tau**	**Ver V pr**	**Ver V sec**	**Af V pr**	**Af V sec**	**V pr**	**V sec**
		7.04	0.31	0.09	7.69	2.18	74.50	21.13

Macro Setto	Spessore	Id Materiale	Id Criterio	Progettazione
	cm			
25	15.00	1	1	Singolo elemento NON DISSIPATIVO

Nodo	Stato	x/d	V N/M	ver. rid	Af pr-	Af pr+	Af sec-	Af sec+	N z	N o	N zo	M z	M o	M zo
									kN/ m	kN/ m	kN/ m	kN	kN	kN
398	ok	0.24	0.5	0.2	5.7	5.7	2.5	2.5	-520.3	-90.9	128.4	0.4	6.83e-02	-2.76e-02
457	ok	0.24	0.5	4.42e-02	5.7	5.7	2.5	2.5	-92.2	-23.8	4.3	-3.5	-0.8	5.97e-02
516	ok	0.24	0.2	3.15e-02	5.7	5.7	2.5	2.5	-69.5	-19.8	-22.6	-2.6	-0.6	4.43e-02
575	ok	0.24	0.2	2.34e-02	5.7	5.7	2.5	2.5	-54.9	-10.1	13.0	-1.7	-0.4	6.79e-02
634	ok	0.24	0.1	2.25e-02	5.7	5.7	2.5	2.5	-41.9	-9.1	-5.2	-0.8	-0.2	6.45e-02
693	ok	0.24	5.25e-02	3.06e-02	5.7	5.7	2.5	2.5	-54.6	-14.8	-18.5	-0.1	4.11e-02	3.85e-02
795	ok	0.24	0.8	0.2	5.7	5.7	2.5	2.5	-441.8	-58.8	79.9	0.5	8.32e-02	2.05e-02
824	ok	0.24	0.5	5.22e-02	5.7	5.7	2.5	2.5	-88.2	9.7	-1.7	-3.4	-0.7	-0.2
853	ok	0.24	0.2	2.96e-02	5.7	5.7	2.5	2.5	-68.3	19.7	-8.6	-2.5	-0.6	-0.2
882	ok	0.24	0.1	2.23e-02	5.7	5.7	2.5	2.5	-55.9	-8.5	0.7	-1.6	-0.3	-0.2
911	ok	0.24	6.24e-02	2.05e-02	5.7	5.7	2.5	2.5	-40.1	-5.2	5.6	-0.8	-0.2	-0.2
961	ok	0.24	7.03e-02	2.50e-02	5.7	5.7	2.5	2.5	-52.9	-13.3	-10.6	1.54e-02	0.1	-0.2
1003	ok	0.24	0.3	0.1	5.7	5.7	2.5	2.5	-258.4	-30.9	46.1	0.1	2.74e-02	4.99e-02
1032	ok	0.24	0.2	4.67e-02	5.7	5.7	2.5	2.5	-88.3	-41.6	43.7	-0.2	-5.64e-02	3.22e-02
1061	ok	0.24	0.2	3.10e-02	5.7	5.7	2.5	2.5	-47.8	7.1	-8.2	1.9	0.3	-0.3
1090	ok	0.24	0.1	2.22e-02	5.7	5.7	2.5	2.5	-50.5	-4.4	-6.8	1.2	0.3	-0.3
1119	ok	0.24	5.99e-02	2.10e-02	5.7	5.7	2.5	2.5	-45.6	-0.9	-9.8	0.6	0.1	-0.3
1169	ok	0.24	5.82e-02	1.97e-02	5.7	5.7	2.5	2.5	-48.7	0.4	-2.0	4.69e-03	6.67e-03	-0.3
1232	ok	0.24	0.3	6.77e-02	5.7	5.7	2.5	2.5	-166.2	-23.1	22.5	-0.2	-5.00e-02	1.54e-02
1289	ok	0.24	0.2	4.23e-02	5.7	5.7	2.5	2.5	-86.7	-22.2	38.4	-0.1	-2.61e-02	1.33e-02
1346	ok	0.24	0.1	2.62e-02	5.7	5.7	2.5	2.5	-55.6	-1.0	-8.4	2.0	0.4	-8.63e-02
1403	ok	0.24	6.22e-02	2.20e-02	5.7	5.7	2.5	2.5	-54.1	-4.0	-6.8	1.3	0.3	-0.1
1460	ok	0.24	4.48e-02	2.05e-02	5.7	5.7	2.5	2.5	-47.7	-1.2	-6.3	0.6	0.1	-9.52e-02
1517	ok	0.24	2.73e-02	1.88e-02	5.7	5.7	2.5	2.5	-46.2	-1.3	-6.6	-7.91e-02	-1.26e-02	-9.51e-02
1559	ok	0.24	0.2	4.63e-02	5.7	5.7	2.5	2.5	-115.1	-4.4	11.4	0.3	7.18e-02	8.87e-03
1588	ok	0.24	0.1	3.43e-02	5.7	5.7	2.5	2.5	-77.0	-14.3	24.3	0.3	6.10e-02	2.44e-02
1617	ok	0.24	0.1	2.30e-02	5.7	5.7	2.5	2.5	-37.9	-15.8	17.4	-3.13e-02	-7.21e-03	2.97e-02
1646	ok	0.24	6.45e-02	1.84e-02	5.7	5.7	2.5	2.5	-42.2	-1.5	-8.3	-1.2	-0.3	-0.3
1675	ok	0.24	3.55e-02	1.73e-02	5.7	5.7	2.5	2.5	-40.2	1.13e-02	-9.7	-0.6	-0.1	-0.2

1725	ok	0.24	2.26e-02	1.77e-02	5.7	5.7	2.5	2.5	-40.4	6.14e-04	-8.0	-4.82e-03	6.90e-03	-0.3
1767	ok	0.24	0.2	3.83e-02	5.7	5.7	2.5	2.5	-95.4	-4.0	8.0	8.92e-02	2.03e-02	3.90e-02
1796	ok	0.24	0.1	3.11e-02	5.7	5.7	2.5	2.5	-71.8	-10.3	19.6	6.52e-02	8.07e-03	2.16e-02
1825	ok	0.24	9.71e-02	2.32e-02	5.7	5.7	2.5	2.5	-39.7	-12.0	17.5	-0.2	-3.36e-02	1.97e-02
1854	ok	0.24	6.79e-02	1.78e-02	5.7	5.7	2.5	2.5	-33.9	-0.9	-12.1	1.2	0.3	-0.2
1883	ok	0.24	4.76e-02	1.66e-02	5.7	5.7	2.5	2.5	-34.2	3.51e-05	-12.5	0.6	0.1	-0.2
1933	ok	0.24	3.19e-02	1.60e-02	5.7	5.7	2.5	2.5	-35.8	0.7	-7.1	7.20e-03	-4.40e-02	-0.2
1996	ok	0.24	0.2	3.48e-02	5.7	5.7	2.5	2.5	-85.0	-9.6	1.3	-0.2	-4.95e-02	1.00e-02
2053	ok	0.24	0.1	2.78e-02	5.7	5.7	2.5	2.5	-64.4	-9.5	15.4	-0.1	-2.80e-02	1.20e-02
2110	ok	0.24	9.46e-02	2.33e-02	5.7	5.7	2.5	2.5	-39.9	-6.0	20.6	-8.91e-02	-1.56e-02	6.53e-03
2167	ok	0.24	6.47e-02	1.81e-02	5.7	5.7	2.5	2.5	-25.0	-1.2	-14.4	-1.3	-0.3	-8.12e-02
2224	ok	0.24	5.13e-02	1.54e-02	5.7	5.7	2.5	2.5	-25.5	-2.0	-10.9	-0.6	-0.1	-8.80e-02
2281	ok	0.24	3.81e-02	1.43e-02	5.7	5.7	2.5	2.5	-35.3	-3.5	-4.4	8.64e-02	-2.31e-03	-9.49e-02
2323	ok	0.24	0.2	2.59e-02	5.7	5.7	2.5	2.5	-64.3	-0.2	4.0	0.3	7.38e-02	8.87e-03
2352	ok	0.24	0.1	2.47e-02	5.7	5.7	2.5	2.5	-52.3	-4.6	12.0	0.3	6.25e-02	2.37e-02
2381	ok	0.24	0.1	1.95e-02	5.7	5.7	2.5	2.5	-34.8	-3.0	12.8	0.2	4.64e-02	1.96e-02
2410	ok	0.24	7.00e-02	1.39e-02	5.7	5.7	2.5	2.5	-25.2	-2.3	-13.0	-1.2	-0.2	-0.2
2439	ok	0.24	6.02e-02	1.21e-02	5.7	5.7	2.5	2.5	-25.7	-2.6	-10.8	-0.6	-0.1	-0.2
2489	ok	0.24	4.92e-02	1.33e-02	5.7	5.7	2.5	2.5	-27.9	-1.4	-7.5	2.07e-02	1.88e-03	-0.3
2531	ok	0.24	0.2	2.49e-02	5.7	5.7	2.5	2.5	-49.8	1.3	3.1	3.2	0.5	-0.2
2560	ok	0.24	0.1	2.31e-02	5.7	5.7	2.5	2.5	-43.2	-2.5	9.4	2.6	0.6	-0.3
2589	ok	0.24	9.66e-02	1.97e-02	5.7	5.7	2.5	2.5	-32.8	-1.5	10.8	1.9	0.4	-0.2
2618	ok	0.24	9.72e-02	1.38e-02	5.7	5.7	2.5	2.5	-23.0	-3.6	-16.1	1.3	0.3	-0.3
2647	ok	0.24	5.90e-02	1.05e-02	5.7	5.7	2.5	2.5	-15.1	-2.4	-9.9	0.7	0.2	-0.2
2697	ok	0.24	5.10e-02	1.19e-02	5.7	5.7	2.5	2.5	-28.0	-0.7	-7.3	2.12e-02	-4.38e-02	-0.3
2760	ok	0.24	0.2	2.63e-02	5.7	5.7	2.5	2.5	-40.1	-2.6	3.9	-3.5	-0.7	-2.92e-02
2817	ok	0.24	0.1	2.17e-02	5.7	5.7	2.5	2.5	-31.2	-1.8	7.2	-2.8	-0.6	-0.1
2874	ok	0.24	0.1	1.95e-02	5.7	5.7	2.5	2.5	-32.9	-3.2	12.4	1.9	0.4	-7.05e-02
2931	ok	0.24	9.97e-02	1.88e-02	5.7	5.7	2.5	2.5	-34.3	-5.3	-13.9	-1.6	-0.3	-0.1
2988	ok	0.24	8.54e-02	1.32e-02	5.7	5.7	2.5	2.5	-28.0	0.8	-9.9	-0.8	-0.1	-9.47e-02
3045	ok	0.24	3.51e-02	1.03e-02	5.7	5.7	2.5	2.5	-16.4	-0.7	-11.8	6.61e-02	-7.87e-03	-6.59e-02
3087	ok	0.24	0.2	1.79e-02	5.7	5.7	2.5	2.5	-36.4	0.2	2.7	-3.3	-0.5	-0.2
3116	ok	0.24	0.2	1.86e-02	5.7	5.7	2.5	2.5	-33.5	-1.1	6.5	-2.6	-0.4	-0.3
3145	ok	0.24	0.1	1.51e-02	5.7	5.7	2.5	2.5	-12.8	2.2	-15.7	-1.9	-0.3	-0.2
3174	ok	0.24	9.06e-02	1.87e-02	5.7	5.7	2.5	2.5	-32.4	1.1	-6.9	-1.5	-0.2	-0.2
3203	ok	0.24	8.55e-02	1.65e-02	5.7	5.7	2.5	2.5	-32.9	-8.7	-15.5	-0.7	-0.2	-0.3
3253	ok	0.24	7.77e-02	7.57e-03	5.7	5.7	2.5	2.5	-14.2	-6.4	-7.0	0.1	-9.00e-03	-0.3
3295	ok	0.24	0.2	1.55e-02	5.7	5.7	2.5	2.5	-31.5	-3.82e-02	-0.3	0.1	7.45e-03	-1.60e-02
3324	ok	0.24	0.1	1.86e-02	5.7	5.7	2.5	2.5	-37.4	0.5	3.3	9.46e-02	2.64e-02	-1.26e-02
3353	ok	0.24	0.1	1.54e-02	5.7	5.7	2.5	2.5	-23.7	-2.3	7.3	6.88e-02	4.09e-02	-0.3
3382	ok	0.24	8.98e-02	9.31e-03	5.7	5.7	2.5	2.5	-13.7	-5.7	12.3	1.67e-02	6.16e-03	1.52e-02
3411	ok	0.24	7.41e-02	9.22e-03	5.7	5.7	2.5	2.5	-15.0	-3.7	-12.0	0.1	0.1	-0.3
3461	ok	0.24	4.61e-02	6.80e-03	5.7	5.7	2.5	2.5	-10.1	1.2	-3.3	-0.1	-3.54e-02	-4.38e-02
3530	ok	0.24	0.2	1.25e-02	5.7	5.7	2.5	2.5	-25.0	-2.8	-2.5	0.3	4.49e-02	2.22e-02
3587	ok	0.24	0.1	2.13e-02	5.7	5.7	2.5	2.5	-34.2	-1.2	-12.6	-0.5	-8.89e-02	1.93e-02
3644	ok	0.24	0.1	1.26e-02	5.7	5.7	2.5	2.5	-4.3	-1.0	-13.5	-0.4	-6.33e-02	-2.34e-02
3701	ok	0.24	8.82e-02	8.78e-03	5.7	5.7	2.5	2.5	-5.4	-1.6	7.1	-1.0	-0.2	-0.1
3758	ok	0.24	5.09e-02	7.65e-03	5.7	5.7	2.5	2.5	-13.1	-1.4	-10.0	0.6	9.94e-02	-6.07e-02
3815	ok	0.24	4.24e-02	4.03e-03	5.7	5.7	2.5	2.5	-6.9	1.7	-2.1	-2.59e-02	-1.79e-02	-7.05e-03
3887	ok	0.24	0.1	1.84e-02	5.7	5.7	2.5	2.5	11.2	-32.7	1.9	-5.41e-02	5.08e-04	1.17e-02
3916	ok	0.24	0.2	3.09e-02	5.7	5.7	2.5	2.5	-56.3	18.5	16.7	-2.95e-02	1.75e-02	4.61e-02
3945	ok	0.24	0.2	2.31e-02	5.7	5.7	2.5	2.5	6.2	-10.0	-17.3	-0.2	3.90e-03	-6.06e-02
3974	ok	0.24	0.1	5.79e-03	5.7	5.7	2.5	2.5	-6.6	-5.7	7.8	-0.9	-0.2	-0.2
4003	ok	0.24	4.99e-02	6.22e-03	5.7	5.7	2.5	2.5	-15.0	0.7	-2.1	-0.4	-8.53e-02	-0.2
4053	ok	0.24	4.73e-02	2.88e-03	5.7	5.7	2.5	2.5	-2.7	2.4	-6.2	1.26e-02	6.33e-03	-2.61e-02
4398	ok	0.24	0.3	0.0	5.7	5.7	2.5	2.5	43.5	34.5	-23.7	-0.1	-8.50e-02	4.67e-02
4427	ok	0.24	0.4	0.1	5.7	5.7	2.5	2.5	-214.9	-81.3	-24.7	0.8	0.2	-4.43e-02
4456	ok	0.24	0.4	1.34e-02	5.7	5.7	2.5	2.5	31.1	5.9	15.1	0.5	7.12e-02	2.42e-02
4485	ok	0.24	0.1	5.12e-03	5.7	5.7	2.5	2.5	-5.5	-1.9	6.0	0.5	3.77e-02	-0.2
4514	ok	0.24	4.91e-02	4.17e-03	5.7	5.7	2.5	2.5	-1.1	2.7	-3.6	-0.4	-0.1	7.93e-02
4564	ok	0.24	4.00e-02	2.98e-03	5.7	5.7	2.5	2.5	0.4	0.7	-4.4	0.3	9.14e-03	0.1
4740	ok	0.24	0.4	0.1	5.7	5.7	2.5	2.5	-223.0	-39.0	-55.1	1.2	0.2	0.1
4799	ok	0.24	0.5	1.54e-02	5.7	5.7	2.5	2.5	138.5	32.0	41.9	-0.1	2.04e-02	-9.47e-03
4858	ok	0.24	0.2	8.56e-03	5.7	5.7	2.5	2.5	-9.7	0.6	-4.4	-1.5	-0.3	-0.1
4917	ok	0.24	4.91e-02	5.56e-03	5.7	5.7	2.5	2.5	-4.3	0.8	-5.7	-0.4	-0.2	-8.75e-02
4976	ok	0.24	3.28e-02	1.87e-03	5.7	5.7	2.5	2.5	1.0	2.4	-3.2	0.3	-6.01e-02	7.43e-03

Nodo	**x/d**	**V N/M**	**ver. rid**	**Af pr-**	**Af pr+**	**Af sec-**	**Af sec+**	**N z**	**N o**	**N zo**	**M z**	**M o**	**M zo**
								-520.30	-90.86	-55.06	-3.54	-0.81	-0.34
	0.24	0.81	0.22	5.65	5.65	2.51	2.51	138.46	34.55	128.44	3.20	0.56	0.15

Nodo	**Stato**	**Max tau** daN/cm2	**Ver V pr**	**Ver V sec**	**Af V pr**	**Af V sec**	**V pr** kN/ m	**V sec** kN/ m
398	ok	1.72						
457	ok	1.44						
516	ok	0.94						
575	ok	0.64						

634	ok	0.43
693	ok	0.81
795	ok	1.94
824	ok	1.40
853	ok	1.08
882	ok	0.67
911	ok	0.52
961	ok	0.76
1003	ok	1.94
1032	ok	1.29
1061	ok	1.07
1090	ok	0.64
1119	ok	0.40
1169	ok	0.47
1232	ok	1.75
1289	ok	1.31
1346	ok	0.93
1403	ok	0.63
1460	ok	0.35
1517	ok	0.48
1559	ok	1.89
1588	ok	1.33
1617	ok	1.05
1646	ok	0.66
1675	ok	0.39
1725	ok	0.38
1767	ok	1.89
1796	ok	1.32
1825	ok	1.05
1854	ok	0.64
1883	ok	0.41
1933	ok	0.41
1996	ok	1.76
2053	ok	1.31
2110	ok	0.94
2167	ok	0.65
2224	ok	0.36
2281	ok	0.43
2323	ok	1.91
2352	ok	1.33
2381	ok	1.06
2410	ok	0.67
2439	ok	0.40
2489	ok	0.42
2531	ok	1.91
2560	ok	1.35
2589	ok	1.06
2618	ok	0.69
2647	ok	0.47
2697	ok	0.51
2760	ok	1.88
2817	ok	1.34
2874	ok	0.98
2931	ok	0.96
2988	ok	0.80
3045	ok	0.55
3087	ok	2.01
3116	ok	1.35
3145	ok	1.12
3174	ok	1.01
3203	ok	0.82
3253	ok	0.56
3295	ok	2.01
3324	ok	1.36
3353	ok	1.11
3382	ok	0.58
3411	ok	0.43
3461	ok	0.47
3530	ok	1.96
3587	ok	2.09
3644	ok	1.75
3701	ok	0.80
3758	ok	0.38
3815	ok	0.46
3887	ok	0.85
3916	ok	2.65
3945	ok	1.75
3974	ok	0.82
4003	ok	0.38

4053	ok	0.21						
4398	ok	1.10						
4427	ok Av	6.91	0.31	0.04	7.8	1.0	75.4	9.4
4456	ok	1.74						
4485	ok	1.00						
4514	ok	0.37						
4564	ok	0.66						
4740	ok Av	7.14	0.31	0.08	7.8	2.1	75.9	20.3
4799	ok	1.20						
4858	ok	0.96						
4917	ok	0.30						
4976	ok	0.69						
Nodo		**Max tau**	**Ver V pr**	**Ver V sec**	**Af V pr**	**Af V sec**	**V pr**	**V sec**
		7.14	0.31	0.08	7.83	2.10	75.86	20.31

Macro Setto	Spessore	Id Materiale	Id Criterio	Progettazione
	cm			
26	15.00	1	1	Singolo elemento NON DISSIPATIVO

Nodo	Stato	x/d	V N/M	ver. rid	Af pr-	Af pr+	Af sec-	Af sec+	N z	N o	N zo	M z	M o	M zo
									kN/ m	kN/ m	kN/ m	kN	kN	kN
400	ok	0.24	0.6	0.2	5.7	5.7	2.5	2.5	-490.2	-85.8	120.2	0.4	6.77e-02	-3.80e-02
459	ok	0.24	0.5	4.57e-02	5.7	5.7	2.5	2.5	-91.7	-23.8	3.0	-3.5	-0.8	5.61e-02
518	ok	0.24	0.2	3.21e-02	5.7	5.7	2.5	2.5	-71.2	-20.1	-22.5	-2.6	-0.6	4.39e-02
577	ok	0.24	0.2	2.36e-02	5.7	5.7	2.5	2.5	-55.5	-10.3	13.0	-1.7	-0.4	6.63e-02
636	ok	0.24	0.1	2.27e-02	5.7	5.7	2.5	2.5	-42.4	-9.2	-5.3	-0.8	-0.2	6.36e-02
695	ok	0.24	5.22e-02	3.06e-02	5.7	5.7	2.5	2.5	-54.9	-14.9	-18.5	-0.1	4.47e-02	3.92e-02
796	ok	0.24	0.8	0.2	5.7	5.7	2.5	2.5	-424.2	-59.0	77.9	0.4	8.08e-02	1.82e-02
825	ok	0.24	0.5	5.07e-02	5.7	5.7	2.5	2.5	-87.4	11.8	-3.8	-3.3	-0.7	-0.2
854	ok	0.24	0.2	2.97e-02	5.7	5.7	2.5	2.5	-68.7	20.5	-9.0	-2.5	-0.6	-0.2
883	ok	0.24	0.1	2.25e-02	5.7	5.7	2.5	2.5	-56.4	-8.4	0.5	-1.6	-0.3	-0.2
912	ok	0.24	5.08e-02	2.06e-02	5.7	5.7	2.5	2.5	-40.5	-5.0	5.6	-0.8	-0.2	-0.2
963	ok	0.24	6.55e-02	2.51e-02	5.7	5.7	2.5	2.5	-53.4	-13.5	-10.4	2.90e-02	0.1	-0.2
1004	ok	0.24	0.4	0.1	5.7	5.7	2.5	2.5	-247.8	-30.7	45.2	0.1	2.70e-02	4.81e-02
1033	ok	0.24	0.2	4.41e-02	5.7	5.7	2.5	2.5	-84.0	-39.9	40.7	-0.2	-5.12e-02	3.29e-02
1062	ok	0.24	0.2	3.11e-02	5.7	5.7	2.5	2.5	-47.9	8.0	-9.4	1.8	0.3	-0.3
1091	ok	0.24	0.1	2.23e-02	5.7	5.7	2.5	2.5	-51.0	-3.9	-7.3	1.2	0.2	-0.3
1120	ok	0.24	5.97e-02	2.11e-02	5.7	5.7	2.5	2.5	-46.1	-0.8	-9.9	0.5	0.1	-0.3
1171	ok	0.24	5.75e-02	1.99e-02	5.7	5.7	2.5	2.5	-49.1	0.4	-6.1	5.30e-03	1.02e-02	-0.3
1234	ok	0.24	0.3	6.50e-02	5.7	5.7	2.5	2.5	-159.5	-22.6	22.0	-0.2	-4.00e-02	2.17e-02
1291	ok	0.24	0.2	4.00e-02	5.7	5.7	2.5	2.5	-82.5	-21.3	35.9	-9.38e-02	-1.91e-02	1.67e-02
1348	ok	0.24	0.1	2.62e-02	5.7	5.7	2.5	2.5	-55.0	-0.4	-9.9	1.9	0.4	-8.87e-02
1405	ok	0.24	6.12e-02	2.21e-02	5.7	5.7	2.5	2.5	-54.1	-3.6	-7.6	1.3	0.3	-0.1
1462	ok	0.24	4.55e-02	2.07e-02	5.7	5.7	2.5	2.5	-48.0	-1.1	-6.5	0.6	0.1	-0.1
1519	ok	0.24	2.80e-02	1.90e-02	5.7	5.7	2.5	2.5	-46.7	-1.2	-6.8	-8.31e-02	-1.30e-02	-9.75e-02
1560	ok	0.24	0.2	4.44e-02	5.7	5.7	2.5	2.5	-110.3	-4.6	11.4	0.3	6.34e-02	7.70e-03
1589	ok	0.24	0.1	3.27e-02	5.7	5.7	2.5	2.5	-73.3	-13.9	23.3	0.2	5.10e-02	2.20e-02
1618	ok	0.24	0.1	2.16e-02	5.7	5.7	2.5	2.5	-36.1	-15.1	16.5	-3.26e-02	-6.82e-03	2.60e-02
1647	ok	0.24	6.26e-02	1.83e-02	5.7	5.7	2.5	2.5	-41.7	-1.1	-9.0	-1.2	-0.2	-0.3
1676	ok	0.24	3.73e-02	1.74e-02	5.7	5.7	2.5	2.5	-40.3	0.2	-10.2	-0.5	-0.1	-0.2
1727	ok	0.24	2.22e-02	1.79e-02	5.7	5.7	2.5	2.5	-40.8	4.33e-02	-8.3	-4.96e-03	8.85e-03	-0.3
1768	ok	0.24	0.2	3.66e-02	5.7	5.7	2.5	2.5	-91.2	-4.0	7.9	9.22e-02	1.87e-02	3.35e-02
1797	ok	0.24	0.1	2.96e-02	5.7	5.7	2.5	2.5	-68.3	-10.1	18.8	6.82e-02	9.31e-03	1.90e-02
1826	ok	0.24	9.98e-02	2.18e-02	5.7	5.7	2.5	2.5	-37.8	-11.5	16.8	-0.1	-2.70e-02	1.70e-02
1855	ok	0.24	7.05e-02	1.74e-02	5.7	5.7	2.5	2.5	-33.4	-0.6	-12.7	1.2	0.2	-0.2
1884	ok	0.24	4.95e-02	1.67e-02	5.7	5.7	2.5	2.5	-34.2	0.2	-13.0	0.5	0.1	-0.2
1935	ok	0.24	3.08e-02	1.61e-02	5.7	5.7	2.5	2.5	-39.3	0.4	-6.8	2.59e-03	-2.82e-02	-0.3
1998	ok	0.24	0.2	3.25e-02	5.7	5.7	2.5	2.5	-81.3	-9.4	1.3	-0.1	-3.64e-02	1.29e-02
2055	ok	0.24	0.1	2.61e-02	5.7	5.7	2.5	2.5	-61.2	-9.1	14.7	-9.74e-02	-1.83e-02	1.23e-02
2112	ok	0.24	9.27e-02	2.18e-02	5.7	5.7	2.5	2.5	-37.9	-5.7	19.8	-5.24e-02	-8.05e-03	6.80e-03
2169	ok	0.24	6.50e-02	1.74e-02	5.7	5.7	2.5	2.5	-23.8	-0.9	-14.5	-1.3	-0.2	-8.47e-02
2226	ok	0.24	5.16e-02	1.55e-02	5.7	5.7	2.5	2.5	-25.2	-1.9	-11.2	-0.6	-0.1	-9.21e-02
2283	ok	0.24	3.82e-02	1.44e-02	5.7	5.7	2.5	2.5	-35.3	-3.5	-4.8	8.82e-02	1.58e-03	-9.67e-02
2324	ok	0.24	0.2	2.45e-02	5.7	5.7	2.5	2.5	-61.2	-0.3	4.1	0.3	6.56e-02	6.95e-03
2353	ok	0.24	0.1	2.26e-02	5.7	5.7	2.5	2.5	-49.4	-4.5	11.9	0.2	5.20e-02	2.04e-02
2382	ok	0.24	0.1	1.80e-02	5.7	5.7	2.5	2.5	-32.8	-2.8	12.7	0.2	3.85e-02	1.71e-02
2411	ok	0.24	6.99e-02	1.32e-02	5.7	5.7	2.5	2.5	-24.1	-2.0	-13.1	-1.2	-0.2	-0.2
2440	ok	0.24	5.92e-02	1.21e-02	5.7	5.7	2.5	2.5	-25.5	-2.3	-11.1	-0.5	-0.1	-0.2
2491	ok	0.24	4.82e-02	1.35e-02	5.7	5.7	2.5	2.5	-28.0	-1.3	-7.8	2.16e-02	6.78e-03	-0.3
2532	ok	0.24	0.2	2.27e-02	5.7	5.7	2.5	2.5	-45.9	1.5	3.6	-0.2	-5.31e-02	6.80e-03
2561	ok	0.24	0.1	2.10e-02	5.7	5.7	2.5	2.5	-40.2	-1.4	10.3	-0.2	-4.52e-02	2.13e-02
2590	ok	0.24	9.80e-02	1.83e-02	5.7	5.7	2.5	2.5	-33.0	-3.5	12.4	6.08e-02	1.20e-02	2.54e-02

2619	ok	0.24	9.78e-02	1.31e-02	5.7	5.7	2.5	2.5	-21.9	-3.4	-15.9	1.3	0.3	-0.3
2648	ok	0.24	5.76e-02	1.04e-02	5.7	5.7	2.5	2.5	-15.3	-2.1	-10.2	0.6	0.2	-0.2
2699	ok	0.24	5.01e-02	1.20e-02	5.7	5.7	2.5	2.5	-28.0	1.2	-7.7	1.42e-02	-3.48e-02	-0.3
2762	ok	0.24	0.2	2.43e-02	5.7	5.7	2.5	2.5	-48.0	-4.7	-7.1	0.3	4.24e-02	7.86e-03
2819	ok	0.24	0.2	1.96e-02	5.7	5.7	2.5	2.5	-40.0	-4.2	8.2	-8.73e-02	-1.49e-02	1.40e-02
2876	ok	0.24	0.1	1.80e-02	5.7	5.7	2.5	2.5	-30.8	-3.1	13.6	-4.63e-02	-5.21e-03	8.67e-03
2933	ok	0.24	0.1	1.67e-02	5.7	5.7	2.5	2.5	-31.3	-4.7	-12.0	-1.6	-0.3	-0.1
2990	ok	0.24	8.22e-02	1.28e-02	5.7	5.7	2.5	2.5	-27.7	0.4	-9.5	-0.8	-0.1	-9.95e-02
3047	ok	0.24	3.35e-02	1.02e-02	5.7	5.7	2.5	2.5	-16.5	-0.8	-11.2	5.34e-02	-4.33e-03	-6.60e-02
3088	ok	0.24	0.2	1.56e-02	5.7	5.7	2.5	2.5	-32.7	0.3	2.8	0.2	5.50e-02	5.12e-03
3117	ok	0.24	0.2	1.61e-02	5.7	5.7	2.5	2.5	-26.9	-0.1	7.6	-6.79e-02	7.83e-02	0.2
3146	ok	0.24	0.1	1.35e-02	5.7	5.7	2.5	2.5	-9.6	2.2	-13.4	-1.8	-0.3	-0.2
3175	ok	0.24	8.90e-02	1.85e-02	5.7	5.7	2.5	2.5	-31.4	0.6	-5.5	-1.4	-0.2	-0.2
3204	ok	0.24	8.76e-02	1.59e-02	5.7	5.7	2.5	2.5	-32.3	-7.9	-14.7	-0.7	-0.2	-0.3
3255	ok	0.24	7.54e-02	7.48e-03	5.7	5.7	2.5	2.5	-14.4	-5.9	-6.7	0.1	-9.38e-03	-0.3
3296	ok	0.24	0.2	1.37e-02	5.7	5.7	2.5	2.5	-27.7	-6.91e-02	-0.8	8.31e-02	4.85e-03	-1.83e-02
3325	ok	0.24	0.2	1.54e-02	5.7	5.7	2.5	2.5	-24.0	0.4	6.3	-2.4	-0.5	0.2
3354	ok	0.24	0.1	1.35e-02	5.7	5.7	2.5	2.5	-22.0	-1.9	7.7	1.9	0.4	-0.3
3383	ok	0.24	8.73e-02	9.33e-03	5.7	5.7	2.5	2.5	-13.9	-0.9	11.5	1.2	0.2	-0.3
3412	ok	0.24	7.36e-02	8.99e-03	5.7	5.7	2.5	2.5	-13.4	0.7	-9.2	0.6	7.29e-02	-0.2
3463	ok	0.24	4.45e-02	6.64e-03	5.7	5.7	2.5	2.5	-10.9	1.0	-2.9	-1.40e-02	-9.91e-02	-0.2
3532	ok	0.24	0.2	1.21e-02	5.7	5.7	2.5	2.5	-23.8	-2.9	-3.7	0.3	3.19e-02	8.25e-03
3589	ok	0.24	0.2	1.62e-02	5.7	5.7	2.5	2.5	-21.1	-1.4	-8.8	2.1	0.3	-9.39e-02
3646	ok	0.24	0.1	1.11e-02	5.7	5.7	2.5	2.5	-19.5	-2.0	5.3	2.0	0.4	-0.1
3703	ok	0.24	8.91e-02	8.95e-03	5.7	5.7	2.5	2.5	-12.9	-1.2	12.8	1.3	0.3	-0.1
3760	ok	0.24	4.86e-02	7.78e-03	5.7	5.7	2.5	2.5	-13.4	-1.5	-10.0	0.6	0.1	-6.33e-02
3817	ok	0.24	4.14e-02	3.75e-03	5.7	5.7	2.5	2.5	-7.5	1.1	-1.6	6.63e-02	-6.27e-02	-7.10e-02
3888	ok	0.24	0.1	1.16e-02	5.7	5.7	2.5	2.5	4.8	0.6	1.7	-6.53e-02	-2.06e-02	2.41e-02
3917	ok	0.24	0.2	1.98e-02	5.7	5.7	2.5	2.5	-35.8	11.5	12.9	1.50e-02	2.89e-02	4.41e-02
3946	ok	0.24	0.1	1.27e-02	5.7	5.7	2.5	2.5	-9.4	-3.7	4.4	-1.7	-0.4	-0.4
3975	ok	0.24	0.1	5.69e-03	5.7	5.7	2.5	2.5	-6.3	2.5	9.8	-1.0	-0.3	-0.3
4004	ok	0.24	4.78e-02	5.99e-03	5.7	5.7	2.5	2.5	-4.5	-2.5	4.6	0.2	2.70e-02	-0.2
4055	ok	0.24	4.33e-02	2.90e-03	5.7	5.7	2.5	2.5	-2.8	1.6	-5.8	1.16e-02	3.32e-03	-2.33e-02
4399	ok	0.24	0.2	0.0	5.7	5.7	2.5	2.5	26.1	22.6	-15.1	-0.2	-9.17e-02	6.63e-02
4428	ok	0.24	0.5	6.41e-02	5.7	5.7	2.5	2.5	-126.6	-47.3	-19.4	-6.8	-1.7	0.4
4457	ok	0.24	0.3	1.13e-02	5.7	5.7	2.5	2.5	78.3	6.3	-8.2	-2.6	-0.8	4.59e-02
4486	ok	0.24	0.1	5.55e-03	5.7	5.7	2.5	2.5	-6.6	-1.6	5.3	0.5	4.41e-02	-0.2
4515	ok	0.24	4.87e-02	3.99e-03	5.7	5.7	2.5	2.5	-1.0	2.4	-3.5	-0.4	-0.1	7.59e-02
4566	ok	0.24	4.07e-02	2.90e-03	5.7	5.7	2.5	2.5	-3.4	-3.0	1.2	-0.5	-7.19e-02	-0.3
4742	ok	0.24	0.5	6.80e-02	5.7	5.7	2.5	2.5	-128.3	-24.7	-31.3	-6.4	-1.4	6.49e-02
4801	ok	0.24	0.4	1.24e-02	5.7	5.7	2.5	2.5	82.1	15.0	8.9	-2.6	-0.7	-0.3
4860	ok	0.24	0.2	7.95e-03	5.7	5.7	2.5	2.5	-11.9	-1.2	-2.8	0.2	3.61e-02	1.45e-02
4919	ok	0.24	4.70e-02	5.30e-03	5.7	5.7	2.5	2.5	-5.2	-1.8	-3.7	0.6	0.2	9.61e-02
4978	ok	0.24	3.28e-02	1.89e-03	5.7	5.7	2.5	2.5	2.7	3.5	-1.9	0.5	-8.19e-02	-1.11e-02

Nodo	**x/d**	**V N/M**	**ver. rid**	**Af pr-**	**Af pr+**	**Af sec-**	**Af sec+**	**N z**	**N o**	**N zo**	**M z**	**M o**	**M zo**
								-490.20	-85.83	-31.34	-6.81	-1.66	-0.35
	0.24	0.82	0.21	5.65	5.65	2.51	2.51	82.05	22.57	120.18	2.09	0.42	0.37

Nodo	**Stato**	**Max tau**	**Ver V pr**	**Ver V sec**	**Af V pr**	**Af V sec**	**V pr**	**V sec**
		daN/cm2					kN/ m	kN/ m
400	ok	1.69						
459	ok	1.43						
518	ok	0.93						
577	ok	0.63						
636	ok	0.42						
695	ok	0.80						
796	ok	1.92						
825	ok	1.38						
854	ok	1.07						
883	ok	0.66						
912	ok	0.52						
963	ok	0.74						
1004	ok	1.92						
1033	ok	1.28						
1062	ok	1.06						
1091	ok	0.63						
1120	ok	0.39						
1171	ok	0.47						
1234	ok	1.74						
1291	ok	1.30						
1348	ok	0.91						
1405	ok	0.62						
1462	ok	0.34						
1519	ok	0.48						
1560	ok	1.88						
1589	ok	1.32						

1618	ok	1.04						
1647	ok	0.64						
1676	ok	0.38						
1727	ok	0.37						
1768	ok	1.88						
1797	ok	1.31						
1826	ok	1.04						
1855	ok	0.63						
1884	ok	0.40						
1935	ok	0.41						
1998	ok	1.74						
2055	ok	1.29						
2112	ok	0.91						
2169	ok	0.64						
2226	ok	0.35						
2283	ok	0.43						
2324	ok	1.88						
2353	ok	1.31						
2382	ok	1.04						
2411	ok	0.66						
2440	ok	0.39						
2491	ok	0.41						
2532	ok	1.88						
2561	ok	1.33						
2590	ok	1.04						
2619	ok	0.68						
2648	ok	0.47						
2699	ok	0.49						
2762	ok	1.89						
2819	ok	1.33						
2876	ok	0.97						
2933	ok	0.95						
2990	ok	0.78						
3047	ok	0.54						
3088	ok	2.01						
3117	ok	1.34						
3146	ok	1.10						
3175	ok	1.00						
3204	ok	0.81						
3255	ok	0.55						
3296	ok	2.01						
3325	ok	1.37						
3354	ok	1.11						
3383	ok	0.57						
3412	ok	0.43						
3463	ok	0.46						
3532	ok	1.97						
3589	ok	2.12						
3646	ok	1.75						
3703	ok	0.79						
3760	ok	0.37						
3817	ok	0.44						
3888	ok	0.86						
3917	ok	2.70						
3946	ok	1.74						
3975	ok	0.82						
4004	ok	0.38						
4055	ok	0.21						
4399	ok	1.13						
4428	ok Av	7.06	0.32	0.04	7.9	1.1	76.9	10.2
4457	ok	1.74						
4486	ok	1.00						
4515	ok	0.37						
4566	ok	0.64						
4742	ok Av	7.25	0.32	0.09	8.0	2.2	77.5	21.4
4801	ok	1.26						
4860	ok	0.96						
4919	ok	0.30						
4978	ok	0.67						
Nodo		**Max tau**	**Ver V pr**	**Ver V sec**	**Af V pr**	**Af V sec**	**V pr**	**V sec**
		7.25	0.32	0.09	8.00	2.21	77.46	21.36

Macro Setto	Spessore	Id Materiale	Id Criterio	Progettazione
	cm			
27	15.00	1	1	Singolo elemento NON DISSIPATIVO

Nodo	Stato	x/d	V N/M	ver. rid	Af pr-	Af pr+	Af sec-	Af sec+	N z	N o	N zo	M z	M o	M zo
									kN/ m	kN/ m	kN/ m	kN	kN	kN
404	ok	0.24	0.6	0.2	5.7	5.7	2.5	2.5	-489.6	-86.0	119.4	-0.1	2.09e-02	4.23e-02
463	ok	0.24	0.5	4.72e-02	5.7	5.7	2.5	2.5	-93.8	-24.6	2.5	-3.6	-0.8	6.98e-02
522	ok	0.24	0.2	3.29e-02	5.7	5.7	2.5	2.5	-73.6	-20.7	-22.3	-2.7	-0.6	4.49e-02
581	ok	0.24	0.2	2.41e-02	5.7	5.7	2.5	2.5	-56.7	-10.4	13.4	-1.7	-0.4	7.02e-02
640	ok	0.24	0.1	2.25e-02	5.7	5.7	2.5	2.5	-42.9	-9.3	-4.9	-0.9	-0.2	6.62e-02
699	ok	0.24	5.29e-02	3.04e-02	5.7	5.7	2.5	2.5	-55.5	-14.8	-20.1	-0.2	4.46e-02	4.28e-02
798	ok	0.24	0.8	0.2	5.7	5.7	2.5	2.5	-427.9	-60.8	79.4	0.2	7.00e-02	4.30e-03
827	ok	0.24	0.5	5.17e-02	5.7	5.7	2.5	2.5	-89.0	13.0	-4.6	-3.3	-0.7	-0.2
856	ok	0.24	0.2	3.04e-02	5.7	5.7	2.5	2.5	-70.4	21.1	-9.1	-2.5	-0.5	-0.2
885	ok	0.24	0.1	2.29e-02	5.7	5.7	2.5	2.5	-57.6	-8.4	0.9	-1.6	-0.3	-0.2
914	ok	0.24	5.09e-02	2.05e-02	5.7	5.7	2.5	2.5	-41.1	-5.1	6.0	-0.8	-0.2	-0.2
967	ok	0.24	6.33e-02	2.50e-02	5.7	5.7	2.5	2.5	-54.1	-13.7	-12.1	4.06e-02	0.2	-0.2
1006	ok	0.24	0.4	0.1	5.7	5.7	2.5	2.5	-249.4	-31.6	46.3	0.1	2.65e-02	1.88e-02
1035	ok	0.24	0.2	4.43e-02	5.7	5.7	2.5	2.5	-84.1	-40.2	41.1	-0.2	-4.48e-02	7.55e-03
1064	ok	0.24	0.2	3.17e-02	5.7	5.7	2.5	2.5	-48.5	8.7	-9.8	1.8	0.3	-0.3
1093	ok	0.24	0.1	2.27e-02	5.7	5.7	2.5	2.5	-51.9	-3.6	-7.0	1.2	0.2	-0.3
1122	ok	0.24	5.88e-02	2.11e-02	5.7	5.7	2.5	2.5	-46.8	-0.7	-9.6	0.5	0.1	-0.3
1175	ok	0.24	5.48e-02	2.01e-02	5.7	5.7	2.5	2.5	-49.9	0.4	-5.9	9.14e-03	-3.96e-03	-0.3
1238	ok	0.24	0.3	6.52e-02	5.7	5.7	2.5	2.5	-159.8	-22.9	22.8	1.02e-02	-2.17e-02	8.50e-03
1295	ok	0.24	0.2	4.02e-02	5.7	5.7	2.5	2.5	-82.3	-21.4	36.5	3.08e-02	4.17e-03	5.20e-03
1352	ok	0.24	0.1	2.65e-02	5.7	5.7	2.5	2.5	-55.3	-5.08e-03	-10.3	2.0	0.4	-8.40e-02
1409	ok	0.24	6.28e-02	2.25e-02	5.7	5.7	2.5	2.5	-40.6	-0.4	-11.5	-1.3	-0.3	-8.75e-02
1466	ok	0.24	4.45e-02	2.07e-02	5.7	5.7	2.5	2.5	-40.4	-3.3	-11.6	-0.6	-0.1	-8.21e-02
1523	ok	0.24	3.02e-02	1.93e-02	5.7	5.7	2.5	2.5	-47.4	-1.3	-6.9	-0.1	-1.01e-02	-8.85e-02
1562	ok	0.24	0.2	4.43e-02	5.7	5.7	2.5	2.5	-110.0	-4.8	11.8	0.3	7.97e-02	9.02e-04
1591	ok	0.24	0.1	3.27e-02	5.7	5.7	2.5	2.5	-73.0	-14.0	23.8	0.2	5.30e-02	1.75e-02
1620	ok	0.24	9.58e-02	2.14e-02	5.7	5.7	2.5	2.5	-36.1	-15.1	16.9	-7.06e-02	-1.77e-02	2.35e-02
1649	ok	0.24	6.31e-02	1.87e-02	5.7	5.7	2.5	2.5	-42.5	-0.9	-9.2	-1.2	-0.3	-0.3
1678	ok	0.24	3.77e-02	1.77e-02	5.7	5.7	2.5	2.5	-41.1	0.3	-10.3	-0.6	-0.1	-0.2
1731	ok	0.24	2.31e-02	1.82e-02	5.7	5.7	2.5	2.5	-44.6	0.2	-6.9	1.80e-02	2.77e-02	-0.2
1770	ok	0.24	0.2	3.64e-02	5.7	5.7	2.5	2.5	-90.7	-4.1	8.2	0.1	2.24e-02	3.11e-02
1799	ok	0.24	0.1	2.96e-02	5.7	5.7	2.5	2.5	-68.0	-10.1	19.3	0.1	1.23e-02	1.58e-02
1828	ok	0.24	0.1	2.16e-02	5.7	5.7	2.5	2.5	-37.7	-11.5	17.1	-0.2	-3.05e-02	1.31e-02
1857	ok	0.24	7.26e-02	1.76e-02	5.7	5.7	2.5	2.5	-34.0	-0.5	-13.0	1.2	0.3	-0.2
1886	ok	0.24	5.08e-02	1.70e-02	5.7	5.7	2.5	2.5	-34.8	0.3	-13.3	0.6	0.1	-0.2
1939	ok	0.24	3.04e-02	1.64e-02	5.7	5.7	2.5	2.5	-40.0	0.4	-7.0	1.75e-03	-3.51e-02	-0.3
2002	ok	0.24	0.2	3.21e-02	5.7	5.7	2.5	2.5	-80.6	-9.3	1.6	-9.49e-02	-3.65e-02	1.22e-02
2059	ok	0.24	0.1	2.60e-02	5.7	5.7	2.5	2.5	-60.9	-9.0	15.2	-4.44e-02	-1.12e-02	1.02e-02
2116	ok	0.24	9.29e-02	2.15e-02	5.7	5.7	2.5	2.5	-37.8	-5.6	20.2	-9.84e-04	-5.29e-04	4.57e-03
2173	ok	0.24	6.35e-02	1.74e-02	5.7	5.7	2.5	2.5	-24.5	-0.9	-14.9	-1.4	-0.3	-7.81e-02
2230	ok	0.24	5.00e-02	1.58e-02	5.7	5.7	2.5	2.5	-25.9	-1.9	-11.5	-0.7	-0.1	-8.58e-02
2287	ok	0.24	3.96e-02	1.47e-02	5.7	5.7	2.5	2.5	-33.7	-2.9	-7.6	-0.1	-2.49e-02	-8.81e-02
2326	ok	0.24	0.2	2.42e-02	5.7	5.7	2.5	2.5	-60.4	-0.4	4.4	0.3	7.95e-02	8.61e-04
2355	ok	0.24	0.1	2.21e-02	5.7	5.7	2.5	2.5	-48.9	-4.4	12.3	0.3	5.62e-02	1.72e-02
2384	ok	0.24	9.69e-02	1.78e-02	5.7	5.7	2.5	2.5	-32.6	-2.8	13.1	0.2	4.18e-02	1.29e-02
2413	ok	0.24	6.57e-02	1.32e-02	5.7	5.7	2.5	2.5	-24.8	-2.0	-13.5	-1.2	-0.2	-0.2
2442	ok	0.24	5.84e-02	1.24e-02	5.7	5.7	2.5	2.5	-27.2	-2.0	-9.3	-0.6	-0.1	-0.2
2495	ok	0.24	4.82e-02	1.38e-02	5.7	5.7	2.5	2.5	-32.5	-1.8	-8.0	1.98e-02	8.16e-03	-0.2
2534	ok	0.24	0.2	2.21e-02	5.7	5.7	2.5	2.5	-46.4	1.2	3.0	3.0	0.5	-0.2
2563	ok	0.24	0.1	2.06e-02	5.7	5.7	2.5	2.5	-40.4	-2.5	9.0	2.5	0.5	-0.3
2592	ok	0.24	9.68e-02	1.81e-02	5.7	5.7	2.5	2.5	-31.0	-1.4	10.4	1.8	0.4	-0.2
2621	ok	0.24	9.66e-02	1.31e-02	5.7	5.7	2.5	2.5	-22.8	-3.4	-16.4	1.3	0.3	-0.3
2650	ok	0.24	5.79e-02	1.05e-02	5.7	5.7	2.5	2.5	-15.6	-2.2	-10.7	0.7	0.2	-0.2
2703	ok	0.24	4.83e-02	1.22e-02	5.7	5.7	2.5	2.5	-28.6	1.1	-7.9	2.53e-03	-6.73e-02	-0.3
2766	ok	0.24	0.2	2.36e-02	5.7	5.7	2.5	2.5	-37.4	-2.5	3.4	-3.5	-0.7	-2.94e-02
2823	ok	0.24	0.2	1.92e-02	5.7	5.7	2.5	2.5	-29.3	-2.3	7.2	-2.8	-0.6	-0.1
2880	ok	0.24	0.1	1.78e-02	5.7	5.7	2.5	2.5	-24.2	-1.6	10.4	-2.0	-0.4	-6.10e-02
2937	ok	0.24	0.1	1.71e-02	5.7	5.7	2.5	2.5	-32.3	-5.2	-13.1	-1.7	-0.3	-0.1
2994	ok	0.24	8.34e-02	1.27e-02	5.7	5.7	2.5	2.5	-27.5	0.9	-9.9	-0.8	-0.1	-8.30e-02
3051	ok	0.24	3.68e-02	1.05e-02	5.7	5.7	2.5	2.5	-23.7	-0.5	-7.2	1.29e-02	2.83e-03	-6.08e-03
3090	ok	0.24	0.2	1.50e-02	5.7	5.7	2.5	2.5	-33.9	0.2	2.4	-3.2	-0.5	-0.2
3119	ok	0.24	0.2	1.57e-02	5.7	5.7	2.5	2.5	-30.2	-1.8	7.8	-2.6	-0.6	-0.3
3148	ok	0.24	0.1	1.33e-02	5.7	5.7	2.5	2.5	-25.2	-2.5	9.1	-1.9	-0.5	-0.2
3177	ok	0.24	9.10e-02	1.84e-02	5.7	5.7	2.5	2.5	-31.9	0.8	-6.6	-1.5	-0.2	-0.2
3206	ok	0.24	8.63e-02	1.65e-02	5.7	5.7	2.5	2.5	-33.2	-8.5	-15.4	-0.7	-0.2	-0.3
3259	ok	0.24	7.34e-02	7.80e-03	5.7	5.7	2.5	2.5	-14.4	-6.2	-7.2	9.54e-02	-5.93e-03	-0.3
3298	ok	0.24	0.2	1.32e-02	5.7	5.7	2.5	2.5	-24.0	-0.4	-3.6	3.8	0.6	-0.1
3327	ok	0.24	0.2	1.49e-02	5.7	5.7	2.5	2.5	-24.1	-0.8	-7.3	2.7	0.6	-0.2
3356	ok	0.24	0.1	1.34e-02	5.7	5.7	2.5	2.5	-13.8	-0.8	-7.0	1.9	0.4	-0.3
3385	ok	0.24	8.29e-02	9.32e-03	5.7	5.7	2.5	2.5	-13.7	-1.2	10.8	1.2	0.2	-0.3
3414	ok	0.24	7.34e-02	9.44e-03	5.7	5.7	2.5	2.5	-15.6	-3.8	-12.1	0.2	0.1	-0.3
3467	ok	0.24	4.27e-02	6.72e-03	5.7	5.7	2.5	2.5	-10.2	1.1	-3.6	-6.94e-02	-4.75e-02	-5.21e-02
3536	ok	0.24	0.2	1.19e-02	5.7	5.7	2.5	2.5	-23.4	-2.9	-3.8	0.6	7.63e-02	3.78e-02
3593	ok	0.24	0.1	1.57e-02	5.7	5.7	2.5	2.5	-26.4	-2.5	-9.8	2.9	0.7	1.04e-02

3650	ok	0.24	0.1	1.10e-02	5.7	5.7	2.5	2.5	-20.0	-2.7	4.7	2.0	0.4	-0.1
3707	ok	0.24	8.66e-02	8.88e-03	5.7	5.7	2.5	2.5	-7.8	-3.2	-7.3	1.3	0.3	-0.1
3764	ok	0.24	4.79e-02	7.99e-03	5.7	5.7	2.5	2.5	-16.0	-4.3	-6.8	0.7	0.2	-8.22e-02
3821	ok	0.24	4.26e-02	3.82e-03	5.7	5.7	2.5	2.5	-6.5	1.7	-2.1	5.10e-02	-2.17e-02	-3.99e-03
3890	ok	0.24	0.1	1.07e-02	5.7	5.7	2.5	2.5	4.4	0.6	1.4	-0.1	8.19e-03	2.79e-02
3919	ok	0.24	0.2	1.86e-02	5.7	5.7	2.5	2.5	-31.4	-2.1	-9.8	-2.3	-0.1	4.23e-03
3948	ok	0.24	0.1	1.18e-02	5.7	5.7	2.5	2.5	-10.2	-4.2	4.0	-1.7	-0.4	-0.3
3977	ok	0.24	0.1	5.51e-03	5.7	5.7	2.5	2.5	-6.2	-4.7	6.0	0.4	4.11e-02	-0.3
4006	ok	0.24	4.91e-02	5.88e-03	5.7	5.7	2.5	2.5	-4.7	-2.6	4.8	0.2	1.80e-02	-0.2
4059	ok	0.24	4.36e-02	3.05e-03	5.7	5.7	2.5	2.5	-3.0	1.1	-6.0	6.19e-03	-3.05e-02	-3.03e-02
4401	ok	0.24	0.2	0.0	5.7	5.7	2.5	2.5	24.0	21.1	-14.1	4.77e-02	-5.59e-02	3.51e-04
4430	ok	0.24	0.5	5.93e-02	5.7	5.7	2.5	2.5	-133.3	-48.8	-17.2	7.2	1.8	-0.5
4459	ok	0.24	0.3	1.32e-02	5.7	5.7	2.5	2.5	80.3	6.3	-6.2	2.8	0.8	3.96e-03
4488	ok	0.24	0.1	6.23e-03	5.7	5.7	2.5	2.5	-11.2	1.9	1.1	1.8	0.3	-4.61e-02
4517	ok	0.24	4.80e-02	3.87e-03	5.7	5.7	2.5	2.5	-2.8	1.7	-8.83e-02	0.5	6.13e-02	-6.10e-02
4570	ok	0.24	4.10e-02	2.86e-03	5.7	5.7	2.5	2.5	-3.6	-2.9	1.4	-0.5	-8.68e-02	-0.3
4746	ok	0.24	0.5	6.29e-02	5.7	5.7	2.5	2.5	-134.2	-24.0	-28.5	7.2	1.5	1.96e-03
4805	ok	0.24	0.4	1.50e-02	5.7	5.7	2.5	2.5	83.8	16.0	9.6	2.9	0.8	0.3
4864	ok	0.24	0.2	7.81e-03	5.7	5.7	2.5	2.5	-10.9	1.2	13.0	1.9	0.4	0.1
4923	ok	0.24	4.87e-02	5.20e-03	5.7	5.7	2.5	2.5	-5.0	-1.8	-3.6	0.6	0.2	0.1
4982	ok	0.24	3.05e-02	2.02e-03	5.7	5.7	2.5	2.5	-3.1	-0.8	2.8	-0.4	5.96e-02	-1.11e-02

Nodo	**x/d**	**V N/M**	**ver. rid**	**Af pr-**	**Af pr+**	**Af sec-**	**Af sec+**	**N z**	**N o**	**N zo**	**M z**	**M o**	**M zo**
								-489.58	-85.95	-28.51	-3.59	-0.80	-0.52
	0.24	0.83	0.21	5.65	5.65	2.51	2.51	83.79	21.14	119.43	7.18	1.80	0.31

Nodo	**Stato**	**Max tau** daN/cm2	**Ver V pr**	**Ver V sec**	**Af V pr**	**Af V sec**	**V pr** kN/ m	**V sec** kN/ m
404	ok	1.74						
463	ok	1.42						
522	ok	0.91						
581	ok	0.62						
640	ok	0.41						
699	ok	0.79						
798	ok	1.92						
827	ok	1.38						
856	ok	1.06						
885	ok	0.65						
914	ok	0.51						
967	ok	0.70						
1006	ok	1.93						
1035	ok	1.27						
1064	ok	1.05						
1093	ok	0.62						
1122	ok	0.39						
1175	ok	0.45						
1238	ok	1.72						
1295	ok	1.29						
1352	ok	0.90						
1409	ok	0.61						
1466	ok	0.34						
1523	ok	0.48						
1562	ok	1.85						
1591	ok	1.30						
1620	ok	1.02						
1649	ok	0.64						
1678	ok	0.39						
1731	ok	0.41						
1770	ok	1.85						
1799	ok	1.30						
1828	ok	1.02						
1857	ok	0.62						
1886	ok	0.40						
1939	ok	0.39						
2002	ok	1.70						
2059	ok	1.28						
2116	ok	0.91						
2173	ok	0.64						
2230	ok	0.35						
2287	ok	0.45						
2326	ok	1.85						
2355	ok	1.29						
2384	ok	1.02						
2413	ok	0.66						
2442	ok	0.40						
2495	ok	0.42						
2534	ok	1.85						

2563	ok	1.31						
2592	ok	1.02						
2621	ok	0.67						
2650	ok	0.48						
2703	ok	0.50						
2766	ok	1.88						
2823	ok	1.33						
2880	ok	0.96						
2937	ok	0.94						
2994	ok	0.77						
3051	ok	0.55						
3090	ok	2.00						
3119	ok	1.33						
3148	ok	1.09						
3177	ok	0.99						
3206	ok	0.81						
3259	ok	0.55						
3298	ok	2.00						
3327	ok	1.37						
3356	ok	1.09						
3385	ok	0.56						
3414	ok	0.43						
3467	ok	0.45						
3536	ok	1.95						
3593	ok	2.05						
3650	ok	1.71						
3707	ok	0.81						
3764	ok	0.36						
3821	ok	0.43						
3890	ok	0.83						
3919	ok	2.59						
3948	ok	1.70						
3977	ok	0.82						
4006	ok	0.37						
4059	ok	0.20						
4401	ok	1.09						
4430	ok Av	6.68	0.30	0.04	7.5	1.0	73.1	9.4
4459	ok	1.75						
4488	ok	1.01						
4517	ok	0.36						
4570	ok	0.62						
4746	ok Av	6.98	0.30	0.10	7.6	2.5	73.2	23.8
4805	ok	1.29						
4864	ok	0.95						
4923	ok	0.29						
4982	ok	0.66						
Nodo		**Max tau**	**Ver V pr**	**Ver V sec**	**Af V pr**	**Af V sec**	**V pr**	**V sec**
		6.98	0.30	0.10	7.56	2.46	73.22	23.80

Macro Setto	Spessore	Id Materiale	Id Criterio	Progettazione
	cm			
28	15.00	1	1	Singolo elemento NON DISSIPATIVO

Nodo	Stato	x/d	V N/M	ver. rid	Af pr-	Af pr+	Af sec-	Af sec+	N z	N o	N zo	M z	M o	M zo
									kN/ m	kN/ m	kN/ m	kN	kN	kN
406	ok	0.24	0.6	0.2	5.7	5.7	2.5	2.5	-517.7	-91.0	126.6	-0.1	2.11e-02	3.07e-02
465	ok	0.24	0.5	4.68e-02	5.7	5.7	2.5	2.5	-96.2	-25.0	3.4	-3.5	-0.8	6.72e-02
524	ok	0.24	0.2	3.30e-02	5.7	5.7	2.5	2.5	-74.1	-20.8	-22.2	-2.6	-0.6	4.49e-02
583	ok	0.24	0.2	2.43e-02	5.7	5.7	2.5	2.5	-57.0	-10.8	13.7	-1.7	-0.4	6.78e-02
642	ok	0.24	0.1	2.21e-02	5.7	5.7	2.5	2.5	-42.8	-9.1	-4.5	-0.9	-0.2	6.38e-02
701	ok	0.24	5.29e-02	3.01e-02	5.7	5.7	2.5	2.5	-55.6	-14.7	-19.9	-0.2	4.94e-02	4.33e-02
799	ok	0.24	0.8	0.2	5.7	5.7	2.5	2.5	-447.5	-62.0	82.4	0.2	6.73e-02	3.34e-03
828	ok	0.24	0.5	5.24e-02	5.7	5.7	2.5	2.5	-91.2	12.1	-3.1	-3.3	-0.7	-0.2
857	ok	0.24	0.2	3.09e-02	5.7	5.7	2.5	2.5	-71.5	21.0	-8.6	-2.4	-0.5	-0.2
886	ok	0.24	0.1	2.31e-02	5.7	5.7	2.5	2.5	-58.0	-8.7	1.4	-1.6	-0.3	-0.2
915	ok	0.24	5.14e-02	2.02e-02	5.7	5.7	2.5	2.5	-41.0	-5.2	6.2	-0.7	-0.2	-0.2
969	ok	0.24	6.22e-02	2.48e-02	5.7	5.7	2.5	2.5	-54.3	-13.7	-12.0	5.87e-02	0.2	-0.2
1007	ok	0.24	0.4	0.1	5.7	5.7	2.5	2.5	-260.8	-32.3	48.0	0.1	2.58e-02	1.91e-02
1036	ok	0.24	0.2	4.69e-02	5.7	5.7	2.5	2.5	-88.5	-41.9	44.2	-0.2	-3.95e-02	1.01e-02
1065	ok	0.24	0.2	3.21e-02	5.7	5.7	2.5	2.5	-49.3	8.4	-8.9	1.8	0.3	-0.3
1094	ok	0.24	0.1	2.30e-02	5.7	5.7	2.5	2.5	-52.4	-3.9	-6.3	1.1	0.2	-0.3
1123	ok	0.24	5.69e-02	2.09e-02	5.7	5.7	2.5	2.5	-47.0	-0.7	-9.2	0.5	0.1	-0.3

1177	ok	0.24	5.30e-02	2.02e-02	5.7	5.7	2.5	2.5	-50.0	0.3	-5.7	8.45e-03	-8.11e-04	-0.3
1240	ok	0.24	0.3	6.80e-02	5.7	5.7	2.5	2.5	-166.5	-23.5	23.9	5.61e-02	-1.22e-02	1.56e-02
1297	ok	0.24	0.2	4.25e-02	5.7	5.7	2.5	2.5	-86.6	-22.3	39.2	6.87e-02	1.14e-02	9.88e-03
1354	ok	0.24	0.1	2.68e-02	5.7	5.7	2.5	2.5	-56.7	-0.3	-9.3	2.0	0.4	-8.51e-02
1411	ok	0.24	6.09e-02	2.27e-02	5.7	5.7	2.5	2.5	-41.2	-0.7	-11.2	-1.3	-0.3	-8.85e-02
1468	ok	0.24	4.19e-02	2.05e-02	5.7	5.7	2.5	2.5	-40.8	-3.4	-11.4	-0.6	-0.1	-8.46e-02
1525	ok	0.24	3.10e-02	1.94e-02	5.7	5.7	2.5	2.5	-47.6	-1.4	-6.9	-0.1	-1.16e-02	-8.78e-02
1563	ok	0.24	0.2	4.62e-02	5.7	5.7	2.5	2.5	-114.6	-4.8	12.1	0.3	7.15e-02	8.62e-06
1592	ok	0.24	0.1	3.43e-02	5.7	5.7	2.5	2.5	-76.6	-14.4	24.9	0.2	4.41e-02	1.56e-02
1621	ok	0.24	9.41e-02	2.25e-02	5.7	5.7	2.5	2.5	-38.0	-15.7	17.9	-7.30e-02	-1.75e-02	2.08e-02
1650	ok	0.24	6.28e-02	1.89e-02	5.7	5.7	2.5	2.5	-43.3	-1.1	-8.8	-1.2	-0.2	-0.2
1679	ok	0.24	3.65e-02	1.79e-02	5.7	5.7	2.5	2.5	-41.5	0.2	-10.1	-0.5	-0.1	-0.2
1733	ok	0.24	2.32e-02	1.83e-02	5.7	5.7	2.5	2.5	-44.9	4.96e-02	-6.9	2.30e-02	2.89e-02	-0.2
1771	ok	0.24	0.2	3.80e-02	5.7	5.7	2.5	2.5	-94.5	-4.1	8.5	0.1	2.10e-02	2.59e-02
1800	ok	0.24	0.1	3.10e-02	5.7	5.7	2.5	2.5	-71.3	-10.3	20.2	0.1	1.34e-02	1.33e-02
1829	ok	0.24	9.92e-02	2.27e-02	5.7	5.7	2.5	2.5	-39.7	-12.0	18.1	-0.1	-2.51e-02	1.13e-02
1858	ok	0.24	6.98e-02	1.78e-02	5.7	5.7	2.5	2.5	-34.6	-0.6	-12.7	1.2	0.2	-0.2
1887	ok	0.24	4.89e-02	1.71e-02	5.7	5.7	2.5	2.5	-35.2	0.1	-13.1	0.5	0.1	-0.2
1941	ok	0.24	3.02e-02	1.66e-02	5.7	5.7	2.5	2.5	-37.1	0.7	-7.6	-8.56e-03	-4.89e-02	-0.2
2004	ok	0.24	0.2	3.34e-02	5.7	5.7	2.5	2.5	-83.8	-9.5	1.8	-2.96e-02	-2.42e-02	1.54e-02
2061	ok	0.24	0.1	2.73e-02	5.7	5.7	2.5	2.5	-63.9	-9.4	16.0	3.22e-03	-2.12e-03	1.13e-02
2118	ok	0.24	9.15e-02	2.27e-02	5.7	5.7	2.5	2.5	-39.8	-5.9	21.1	3.15e-02	6.04e-03	5.68e-03
2175	ok	0.24	6.06e-02	1.80e-02	5.7	5.7	2.5	2.5	-25.4	-1.1	-15.1	-1.3	-0.3	-8.08e-02
2232	ok	0.24	4.82e-02	1.58e-02	5.7	5.7	2.5	2.5	-26.3	-2.1	-11.6	-0.6	-0.1	-8.67e-02
2289	ok	0.24	3.99e-02	1.49e-02	5.7	5.7	2.5	2.5	-34.2	-2.9	-7.7	-0.1	-2.62e-02	-8.77e-02
2327	ok	0.24	0.2	2.52e-02	5.7	5.7	2.5	2.5	-63.1	-0.4	4.3	0.3	7.17e-02	-6.67e-04
2356	ok	0.24	0.1	2.36e-02	5.7	5.7	2.5	2.5	-51.5	-4.5	12.5	0.2	4.64e-02	1.44e-02
2385	ok	0.24	9.22e-02	1.90e-02	5.7	5.7	2.5	2.5	-35.1	-5.2	13.4	0.1	2.55e-02	1.05e-02
2414	ok	0.24	6.28e-02	1.39e-02	5.7	5.7	2.5	2.5	-25.7	-2.3	-13.8	-1.2	-0.2	-0.2
2443	ok	0.24	5.66e-02	1.26e-02	5.7	5.7	2.5	2.5	-27.7	-2.3	-9.3	-0.6	-0.1	-0.2
2497	ok	0.24	4.68e-02	1.40e-02	5.7	5.7	2.5	2.5	-33.1	-1.9	-8.1	2.38e-02	1.27e-02	-0.2
2535	ok	0.24	0.2	2.36e-02	5.7	5.7	2.5	2.5	-48.8	1.2	3.0	3.0	0.5	-0.2
2564	ok	0.24	0.1	2.21e-02	5.7	5.7	2.5	2.5	-43.3	-1.4	4.4	2.4	0.4	-0.3
2593	ok	0.24	9.30e-02	1.93e-02	5.7	5.7	2.5	2.5	-34.9	-3.7	12.9	9.36e-02	1.71e-02	1.88e-02
2622	ok	0.24	9.46e-02	1.39e-02	5.7	5.7	2.5	2.5	-23.5	-3.6	-16.9	1.3	0.3	-0.3
2651	ok	0.24	5.74e-02	1.12e-02	5.7	5.7	2.5	2.5	-10.6	-2.6	-10.7	0.6	0.2	-0.2
2705	ok	0.24	4.84e-02	1.26e-02	5.7	5.7	2.5	2.5	-28.4	-0.6	-9.1	7.16e-03	-1.79e-02	-5.64e-02
2768	ok	0.24	0.2	2.50e-02	5.7	5.7	2.5	2.5	-39.0	-2.5	3.7	-3.5	-0.7	-2.29e-02
2825	ok	0.24	0.1	2.08e-02	5.7	5.7	2.5	2.5	-30.7	-1.9	7.0	-2.8	-0.6	-0.1
2882	ok	0.24	0.1	1.90e-02	5.7	5.7	2.5	2.5	-32.7	-3.3	13.7	2.59e-02	5.14e-03	2.71e-03
2939	ok	0.24	0.1	1.94e-02	5.7	5.7	2.5	2.5	-35.3	-5.6	-15.1	-1.7	-0.3	-0.1
2996	ok	0.24	8.52e-02	1.36e-02	5.7	5.7	2.5	2.5	-28.3	1.3	-10.4	-0.8	-0.1	-9.45e-02
3053	ok	0.24	3.88e-02	1.11e-02	5.7	5.7	2.5	2.5	-25.0	-0.6	-7.5	2.15e-02	7.95e-03	-8.29e-03
3091	ok	0.24	0.2	1.67e-02	5.7	5.7	2.5	2.5	-35.6	2.57e-02	2.7	-3.2	-0.5	-0.2
3120	ok	0.24	0.1	1.77e-02	5.7	5.7	2.5	2.5	-32.9	-1.1	6.2	-2.5	-0.4	-0.3
3149	ok	0.24	0.1	1.47e-02	5.7	5.7	2.5	2.5	-12.8	2.3	-16.8	-1.8	-0.3	-0.2
3178	ok	0.24	8.63e-02	1.86e-02	5.7	5.7	2.5	2.5	-32.2	1.6	-8.0	-1.4	-0.2	-0.2
3207	ok	0.24	8.40e-02	1.82e-02	5.7	5.7	2.5	2.5	-35.0	-9.1	-16.2	-0.7	-0.2	-0.3
3261	ok	0.24	7.30e-02	8.60e-03	5.7	5.7	2.5	2.5	-15.3	-6.5	-8.2	0.1	-1.06e-02	-0.3
3299	ok	0.24	0.2	1.46e-02	5.7	5.7	2.5	2.5	-29.7	-6.16e-02	-0.4	0.2	9.84e-03	-3.02e-02
3328	ok	0.24	0.1	1.77e-02	5.7	5.7	2.5	2.5	-29.1	4.35e-02	-8.0	2.5	0.5	-0.2
3357	ok	0.24	0.1	1.52e-02	5.7	5.7	2.5	2.5	-16.9	-0.2	-9.0	1.8	0.4	-0.3
3386	ok	0.24	8.71e-02	9.61e-03	5.7	5.7	2.5	2.5	-14.5	-2.7	4.7	9.70e-02	2.84e-02	-3.69e-02
3415	ok	0.24	6.87e-02	9.65e-03	5.7	5.7	2.5	2.5	-15.1	1.2	-8.7	0.6	6.35e-02	-0.2
3469	ok	0.24	3.95e-02	7.35e-03	5.7	5.7	2.5	2.5	-13.4	2.1	-4.2	-1.20e-02	-0.1	-0.2
3538	ok	0.24	0.2	1.20e-02	5.7	5.7	2.5	2.5	-23.9	-2.8	-2.8	0.5	6.11e-02	2.15e-02
3595	ok	0.24	0.1	2.02e-02	5.7	5.7	2.5	2.5	-33.5	-1.8	-10.9	2.7	0.6	-2.93e-02
3652	ok	0.24	0.1	1.25e-02	5.7	5.7	2.5	2.5	-15.3	-2.8	-8.6	2.0	0.5	-8.85e-02
3709	ok	0.24	8.92e-02	8.95e-03	5.7	5.7	2.5	2.5	-5.9	-2.1	4.8	-1.0	-0.2	-0.1
3766	ok	0.24	4.43e-02	7.82e-03	5.7	5.7	2.5	2.5	-15.4	-1.3	-8.4	0.6	0.1	-7.48e-02
3823	ok	0.24	2.91e-02	5.21e-03	5.7	5.7	2.5	2.5	-12.0	-0.5	-3.6	0.1	-6.77e-02	-8.63e-02
3891	ok	0.24	0.1	1.68e-02	5.7	5.7	2.5	2.5	10.3	-29.9	1.4	-6.74e-02	8.86e-05	2.44e-02
3920	ok	0.24	0.2	2.86e-02	5.7	5.7	2.5	2.5	-63.2	6.1	-20.7	1.2	0.6	-0.2
3949	ok	0.24	0.2	2.14e-02	5.7	5.7	2.5	2.5	15.9	-16.4	-25.6	1.4	0.6	-0.2
3978	ok	0.24	0.1	5.22e-03	5.7	5.7	2.5	2.5	-3.7	-2.0	6.2	0.4	4.24e-02	-0.2
4007	ok	0.24	4.90e-02	3.84e-03	5.7	5.7	2.5	2.5	-1.6	-0.7	6.1	-0.3	-9.87e-02	-0.2
4061	ok	0.24	2.92e-02	3.78e-03	5.7	5.7	2.5	2.5	-7.9	0.9	-3.5	1.54e-02	-1.61e-02	-3.90e-02
4402	ok	0.24	0.3	0.0	5.7	5.7	2.5	2.5	39.7	31.8	-21.8	-1.24e-02	-5.95e-02	1.89e-02
4431	ok	0.24	0.4	9.94e-02	5.7	5.7	2.5	2.5	-214.5	-74.8	-30.4	8.1	1.9	-0.4
4460	ok	0.24	0.4	1.56e-02	5.7	5.7	2.5	2.5	36.3	5.6	15.3	2.7	0.5	0.2
4489	ok	0.24	0.1	5.02e-03	5.7	5.7	2.5	2.5	-6.6	1.1	4.2	2.7	0.4	-7.73e-02
4518	ok	0.24	4.74e-02	3.88e-03	5.7	5.7	2.5	2.5	-4.9	-0.2	0.7	0.8	7.44e-02	-9.61e-02
4572	ok	0.24	3.17e-02	2.85e-03	5.7	5.7	2.5	2.5	-1.1	2.20e-02	-3.1	0.3	1.26e-02	0.1
4748	ok	0.24	0.4	0.1	5.7	5.7	2.5	2.5	-219.5	-42.9	-49.4	8.1	1.7	0.2
4807	ok	0.24	0.5	1.86e-02	5.7	5.7	2.5	2.5	130.4	23.9	14.1	2.6	0.7	0.4
4866	ok	0.24	0.2	8.02e-03	5.7	5.7	2.5	2.5	-6.9	1.3	14.4	1.8	0.4	0.1
4925	ok	0.24	4.86e-02	4.88e-03	5.7	5.7	2.5	2.5	-4.7	0.3	-6.6	-0.4	-0.2	-7.36e-02
4984	ok	0.24	2.71e-02	2.50e-03	5.7	5.7	2.5	2.5	0.1	1.8	-2.4	0.3	-4.28e-02	1.90e-02

Nodo	x/d	V N/M	ver. rid	Af pr-	Af pr+	Af sec-	Af sec+	N z	N o	N zo	M z	M o	M zo
								-517.66	-90.98	-49.40	-3.53	-0.79	-0.44
	0.24	0.82	0.22	5.65	5.65	2.51	2.51	130.36	31.76	126.59	8.13	1.94	0.37

Nodo	Stato	Max tau	Ver V pr	Ver V sec	Af V pr	Af V sec	V pr	V sec
		daN/cm2					kN/ m	kN/ m
406	ok	1.70						
465	ok	1.40						
524	ok	0.90						
583	ok	0.61						
642	ok	0.40						
701	ok	0.78						
799	ok	1.89						
828	ok	1.36						
857	ok	1.04						
886	ok	0.64						
915	ok	0.50						
969	ok	0.67						
1007	ok	1.90						
1036	ok	1.25						
1065	ok	1.04						
1094	ok	0.61						
1123	ok	0.39						
1177	ok	0.45						
1240	ok	1.69						
1297	ok	1.27						
1354	ok	0.90						
1411	ok	0.61						
1468	ok	0.33						
1525	ok	0.48						
1563	ok	1.82						
1592	ok	1.28						
1621	ok	1.01						
1650	ok	0.63						
1679	ok	0.38						
1733	ok	0.41						
1771	ok	1.82						
1800	ok	1.28						
1829	ok	1.01						
1858	ok	0.62						
1887	ok	0.40						
1941	ok	0.42						
2004	ok	1.68						
2061	ok	1.26						
2118	ok	0.90						
2175	ok	0.62						
2232	ok	0.34						
2289	ok	0.46						
2327	ok	1.83						
2356	ok	1.28						
2385	ok	1.01						
2414	ok	0.64						
2443	ok	0.39						
2497	ok	0.42						
2535	ok	1.83						
2564	ok	1.30						
2593	ok	1.01						
2622	ok	0.65						
2651	ok	0.46						
2705	ok	0.49						
2768	ok	1.81						
2825	ok	1.29						
2882	ok	0.94						
2939	ok	0.92						
2996	ok	0.75						
3053	ok	0.57						
3091	ok	1.93						
3120	ok	1.30						
3149	ok	1.07						
3178	ok	0.97						
3207	ok	0.79						
3261	ok	0.56						
3299	ok	1.93						
3328	ok	1.31						
3357	ok	1.07						
3386	ok	0.57						
3415	ok	0.41						

3469	ok	0.43						
3538	ok	1.88						
3595	ok	2.01						
3652	ok	1.71						
3709	ok	0.76						
3766	ok	0.32						
3823	ok	0.46						
3891	ok	0.81						
3920	ok	2.55						
3949	ok	1.71						
3978	ok	0.77						
4007	ok	0.35						
4061	ok	0.45						
4402	ok	1.05						
4431	ok Av	6.60	0.30	0.04	7.5	0.9	72.2	8.6
4460	ok	1.73						
4489	ok	0.99						
4518	ok	0.38						
4572	ok	0.63						
4748	ok Av	6.89	0.30	0.09	7.5	2.3	72.5	22.3
4807	ok	1.21						
4866	ok	0.94						
4925	ok	0.32						
4984	ok	0.67						
Nodo		**Max tau**	**Ver V pr**	**Ver V sec**	**Af V pr**	**Af V sec**	**V pr**	**V sec**
		6.89	0.30	0.09	7.48	2.30	72.46	22.30

Macro Setto	Spessore	Id Materiale	Id Criterio	Progettazione
	cm			
29	15.00	1	1	Singolo elemento NON DISSIPATIVO

Nodo	Stato	x/d	V N/M	ver. rid	Af pr-	Af pr+	Af sec-	Af sec+	N z	N o	N zo	M z	M o	M zo
									kN/ m	kN/ m	kN/ m	kN	kN	kN
408	ok	0.24	0.6	0.2	5.7	5.7	2.5	2.5	-528.0	-93.5	125.8	7.17e-02	3.73e-02	-5.29e-03
467	ok	0.24	0.5	4.92e-02	5.7	5.7	2.5	2.5	-97.0	-25.1	3.7	-3.4	-0.8	5.22e-02
526	ok	0.24	0.2	3.32e-02	5.7	5.7	2.5	2.5	-74.3	-20.6	-21.9	-2.5	-0.6	3.95e-02
585	ok	0.24	0.2	2.41e-02	5.7	5.7	2.5	2.5	-56.4	-10.5	13.8	-1.7	-0.3	6.26e-02
644	ok	0.24	0.1	2.16e-02	5.7	5.7	2.5	2.5	-41.7	-8.7	-4.6	-0.8	-0.2	5.67e-02
703	ok	0.24	5.31e-02	2.97e-02	5.7	5.7	2.5	2.5	-55.4	-14.6	-19.6	-0.2	5.43e-02	4.02e-02
800	ok	0.24	0.9	0.2	5.7	5.7	2.5	2.5	-456.6	-57.9	81.0	0.3	7.11e-02	1.19e-02
829	ok	0.24	0.5	5.48e-02	5.7	5.7	2.5	2.5	-91.7	12.3	-2.7	-3.1	-0.7	-0.2
858	ok	0.24	0.2	3.11e-02	5.7	5.7	2.5	2.5	-71.6	21.1	-8.2	-2.3	-0.5	-0.2
887	ok	0.24	9.96e-02	2.29e-02	5.7	5.7	2.5	2.5	-57.6	-8.6	1.6	-1.5	-0.3	-0.2
916	ok	0.24	5.20e-02	1.99e-02	5.7	5.7	2.5	2.5	-40.2	-5.3	6.1	-0.7	-0.1	-0.2
971	ok	0.24	5.95e-02	2.46e-02	5.7	5.7	2.5	2.5	-54.1	-14.0	-11.9	7.52e-02	0.2	-0.2
1008	ok	0.24	0.4	0.1	5.7	5.7	2.5	2.5	-265.9	-30.4	45.6	0.1	2.65e-02	3.23e-02
1037	ok	0.24	0.2	4.82e-02	5.7	5.7	2.5	2.5	-90.6	-42.7	45.6	-0.2	-4.10e-02	2.06e-02
1066	ok	0.24	0.2	3.22e-02	5.7	5.7	2.5	2.5	-49.0	8.5	-8.7	1.7	0.3	-0.3
1095	ok	0.24	0.1	2.29e-02	5.7	5.7	2.5	2.5	-52.1	-3.9	-5.6	1.1	0.2	-0.3
1124	ok	0.24	5.40e-02	2.07e-02	5.7	5.7	2.5	2.5	-46.6	-0.7	-8.8	0.5	0.1	-0.3
1179	ok	0.24	5.01e-02	2.02e-02	5.7	5.7	2.5	2.5	-49.9	0.2	-5.8	1.07e-03	-8.47e-03	-0.3
1242	ok	0.24	0.3	6.89e-02	5.7	5.7	2.5	2.5	-169.1	-23.9	23.0	6.09e-03	-1.58e-02	2.03e-02
1299	ok	0.24	0.2	4.36e-02	5.7	5.7	2.5	2.5	-88.4	-22.6	40.7	5.65e-02	1.19e-02	1.20e-02
1356	ok	0.24	0.1	2.73e-02	5.7	5.7	2.5	2.5	-56.5	-0.2	-9.1	1.9	0.4	-8.61e-02
1413	ok	0.24	6.14e-02	2.26e-02	5.7	5.7	2.5	2.5	-40.8	-0.7	-11.6	-1.3	-0.3	-9.21e-02
1470	ok	0.24	3.83e-02	2.04e-02	5.7	5.7	2.5	2.5	-40.8	-3.5	-12.0	-0.6	-0.1	-8.82e-02
1527	ok	0.24	3.23e-02	1.97e-02	5.7	5.7	2.5	2.5	-48.2	-1.5	-7.6	-0.2	-2.35e-02	-8.61e-02
1564	ok	0.24	0.2	4.70e-02	5.7	5.7	2.5	2.5	-116.6	-5.0	12.4	0.3	7.44e-02	-3.09e-03
1593	ok	0.24	0.1	3.51e-02	5.7	5.7	2.5	2.5	-78.2	-14.6	25.7	0.2	4.85e-02	1.47e-02
1622	ok	0.24	9.26e-02	2.27e-02	5.7	5.7	2.5	2.5	-38.3	-10.1	25.6	0.1	3.64e-02	1.16e-02
1651	ok	0.24	6.17e-02	1.89e-02	5.7	5.7	2.5	2.5	-43.0	-1.1	-9.2	-1.2	-0.2	-0.2
1680	ok	0.24	3.77e-02	1.80e-02	5.7	5.7	2.5	2.5	-43.0	-3.4	-9.2	-0.6	-0.1	-0.2
1735	ok	0.24	2.35e-02	1.87e-02	5.7	5.7	2.5	2.5	-42.4	3.75e-02	-9.2	-2.10e-02	5.97e-03	-0.3
1772	ok	0.24	0.1	3.86e-02	5.7	5.7	2.5	2.5	-96.1	-4.2	8.4	0.1	2.28e-02	2.52e-02
1801	ok	0.24	0.1	3.17e-02	5.7	5.7	2.5	2.5	-72.7	-10.4	21.0	0.1	1.63e-02	1.20e-02
1830	ok	0.24	0.1	2.29e-02	5.7	5.7	2.5	2.5	-40.6	-12.1	18.9	-0.1	-2.52e-02	1.07e-02
1859	ok	0.24	7.10e-02	1.80e-02	5.7	5.7	2.5	2.5	-34.4	-0.7	-13.2	1.2	0.2	-0.2
1888	ok	0.24	5.02e-02	1.73e-02	5.7	5.7	2.5	2.5	-35.3	-1.09e-02	-13.7	0.5	0.1	-0.2
1943	ok	0.24	3.00e-02	1.70e-02	5.7	5.7	2.5	2.5	-37.9	0.7	-8.3	-1.94e-02	-6.14e-02	-0.2
2006	ok	0.24	0.2	3.38e-02	5.7	5.7	2.5	2.5	-84.9	-9.5	1.7	-2.10e-02	-2.18e-02	1.61e-02
2063	ok	0.24	0.1	2.79e-02	5.7	5.7	2.5	2.5	-65.2	-9.5	16.7	1.22e-02	1.03e-03	1.05e-02
2120	ok	0.24	9.07e-02	2.30e-02	5.7	5.7	2.5	2.5	-40.7	-6.0	21.7	3.98e-02	8.66e-03	4.83e-03

2177	ok	0.24	6.24e-02	1.82e-02	5.7	5.7	2.5	2.5	-25.2	-1.1	-15.8	-1.3	-0.3	-8.16e-02
2234	ok	0.24	4.70e-02	1.60e-02	5.7	5.7	2.5	2.5	-26.5	-2.2	-12.2	-0.6	-0.1	-8.66e-02
2291	ok	0.24	4.10e-02	1.54e-02	5.7	5.7	2.5	2.5	-37.7	-3.8	-5.5	0.2	1.16e-03	-8.47e-02
2328	ok	0.24	0.2	2.57e-02	5.7	5.7	2.5	2.5	-64.2	-0.5	4.5	0.2	6.88e-02	-6.94e-03
2357	ok	0.24	0.1	2.38e-02	5.7	5.7	2.5	2.5	-52.6	-4.6	12.8	0.2	4.91e-02	1.27e-02
2386	ok	0.24	9.00e-02	1.92e-02	5.7	5.7	2.5	2.5	-36.1	-5.3	13.7	0.1	2.60e-02	8.79e-03
2415	ok	0.24	6.06e-02	1.42e-02	5.7	5.7	2.5	2.5	-25.6	-2.3	-14.5	-1.2	-0.2	-0.2
2444	ok	0.24	5.54e-02	1.29e-02	5.7	5.7	2.5	2.5	-27.9	-2.3	-10.0	-0.6	-0.1	-0.2
2499	ok	0.24	4.53e-02	1.45e-02	5.7	5.7	2.5	2.5	-34.0	-2.0	-8.7	6.67e-02	1.02e-02	-0.2
2536	ok	0.24	0.2	2.37e-02	5.7	5.7	2.5	2.5	-48.5	1.4	3.9	-0.2	-7.01e-02	-8.09e-03
2565	ok	0.24	0.1	2.24e-02	5.7	5.7	2.5	2.5	-43.1	-1.4	11.0	-0.2	-4.91e-02	1.38e-02
2594	ok	0.24	9.06e-02	1.97e-02	5.7	5.7	2.5	2.5	-35.8	-3.8	13.2	0.1	1.93e-02	1.76e-02
2623	ok	0.24	9.32e-02	1.43e-02	5.7	5.7	2.5	2.5	-23.8	-3.4	-17.9	1.3	0.3	-0.3
2652	ok	0.24	5.76e-02	1.14e-02	5.7	5.7	2.5	2.5	-10.9	-2.9	-11.5	0.6	0.2	-0.2
2707	ok	0.24	4.83e-02	1.30e-02	5.7	5.7	2.5	2.5	-29.1	-0.7	-9.8	8.19e-03	-2.23e-02	-5.97e-02
2770	ok	0.24	0.2	2.52e-02	5.7	5.7	2.5	2.5	-39.6	-2.6	3.8	-3.4	-0.7	-2.19e-02
2827	ok	0.24	0.1	2.12e-02	5.7	5.7	2.5	2.5	-31.4	-2.4	6.9	-2.8	-0.6	-0.1
2884	ok	0.24	0.1	1.93e-02	5.7	5.7	2.5	2.5	-26.4	-1.9	9.7	-2.0	-0.4	-5.39e-02
2941	ok	0.24	0.1	2.04e-02	5.7	5.7	2.5	2.5	-36.2	-6.1	-15.9	-1.7	-0.3	-0.1
2998	ok	0.24	8.63e-02	1.35e-02	5.7	5.7	2.5	2.5	-27.8	1.9	-11.0	-0.8	-0.1	-9.25e-02
3055	ok	0.24	3.90e-02	1.17e-02	5.7	5.7	2.5	2.5	-26.8	-0.7	-8.2	0.1	1.30e-02	-5.57e-03
3092	ok	0.24	0.2	1.71e-02	5.7	5.7	2.5	2.5	-36.5	-5.75e-02	2.9	-3.1	-0.5	-0.2
3121	ok	0.24	0.1	1.82e-02	5.7	5.7	2.5	2.5	-33.7	-1.0	6.0	-2.5	-0.4	-0.3
3150	ok	0.24	0.1	1.51e-02	5.7	5.7	2.5	2.5	-27.3	-2.8	8.2	-1.8	-0.5	-0.2
3179	ok	0.24	8.20e-02	1.84e-02	5.7	5.7	2.5	2.5	-31.6	2.4	-8.6	-1.4	-0.2	-0.2
3208	ok	0.24	7.69e-02	1.91e-02	5.7	5.7	2.5	2.5	-35.8	-9.7	-17.1	-0.7	-0.2	-0.3
3263	ok	0.24	7.43e-02	9.16e-03	5.7	5.7	2.5	2.5	-14.8	-6.6	-8.7	9.91e-02	-1.10e-02	-0.3
3300	ok	0.24	0.2	1.50e-02	5.7	5.7	2.5	2.5	-30.5	-6.66e-02	-0.3	0.2	1.24e-02	-3.29e-02
3329	ok	0.24	0.1	1.85e-02	5.7	5.7	2.5	2.5	-29.8	0.2	-8.3	2.5	0.5	-0.2
3358	ok	0.24	0.1	1.58e-02	5.7	5.7	2.5	2.5	-17.1	-0.2	-9.6	1.8	0.4	-0.3
3387	ok	0.24	8.71e-02	9.65e-03	5.7	5.7	2.5	2.5	-2.2	-4.0	-8.6	0.1	4.08e-02	-6.78e-02
3416	ok	0.24	6.82e-02	1.04e-02	5.7	5.7	2.5	2.5	-15.6	1.2	-9.2	0.6	6.68e-02	-0.2
3471	ok	0.24	4.06e-02	7.52e-03	5.7	5.7	2.5	2.5	-13.5	2.2	-4.5	-4.55e-02	-0.1	-0.2
3540	ok	0.24	0.2	1.23e-02	5.7	5.7	2.5	2.5	-24.5	-2.9	-2.7	0.6	7.61e-02	3.09e-02
3597	ok	0.24	0.1	2.14e-02	5.7	5.7	2.5	2.5	-36.1	-1.6	-13.1	-2.4	-0.4	6.59e-02
3654	ok	0.24	0.1	1.30e-02	5.7	5.7	2.5	2.5	-15.4	-3.0	-9.4	2.0	0.5	-8.53e-02
3711	ok	0.24	8.78e-02	8.94e-03	5.7	5.7	2.5	2.5	-12.0	-4.1	6.0	0.3	5.97e-02	-1.25e-02
3768	ok	0.24	4.43e-02	8.08e-03	5.7	5.7	2.5	2.5	-15.7	-1.4	-8.9	0.7	0.1	-7.23e-02
3825	ok	0.24	2.91e-02	5.29e-03	5.7	5.7	2.5	2.5	-9.6	0.4	-3.0	-0.2	-1.87e-02	8.45e-02
3892	ok	0.24	0.1	1.83e-02	5.7	5.7	2.5	2.5	11.5	-32.5	1.7	-8.02e-02	-1.26e-04	2.32e-02
3921	ok	0.24	0.2	3.12e-02	5.7	5.7	2.5	2.5	-64.2	7.8	-21.5	1.2	0.6	-0.2
3950	ok	0.24	0.2	2.39e-02	5.7	5.7	2.5	2.5	14.7	-18.6	-27.5	1.4	0.6	-0.2
3979	ok	0.24	0.1	5.21e-03	5.7	5.7	2.5	2.5	-3.6	-2.1	6.0	0.4	3.65e-02	-0.2
4008	ok	0.24	4.80e-02	4.00e-03	5.7	5.7	2.5	2.5	-6.2	-0.2	-5.7	0.3	6.40e-02	0.1
4063	ok	0.24	2.84e-02	3.90e-03	5.7	5.7	2.5	2.5	-8.2	0.6	-3.9	-0.1	-4.05e-02	0.2
4403	ok	0.24	0.3	0.0	5.7	5.7	2.5	2.5	43.5	34.3	-23.6	-8.37e-02	-9.83e-02	4.64e-02
4432	ok	0.24	0.4	0.1	5.7	5.7	2.5	2.5	-222.2	-77.7	-34.2	1.7	0.4	-0.1
4461	ok	0.24	0.4	1.52e-02	5.7	5.7	2.5	2.5	60.9	-7.2	-3.5	1.6	0.6	-0.2
4490	ok	0.24	0.1	4.46e-03	5.7	5.7	2.5	2.5	-6.1	1.2	4.4	2.6	0.4	-7.86e-02
4519	ok	0.24	4.66e-02	3.98e-03	5.7	5.7	2.5	2.5	-5.0	-7.87e-02	0.7	0.8	7.19e-02	-9.41e-02
4574	ok	0.24	3.18e-02	2.87e-03	5.7	5.7	2.5	2.5	-1.6	-6.93e-02	-3.2	0.3	2.34e-02	0.1
4750	ok	0.24	0.4	0.1	5.7	5.7	2.5	2.5	-228.4	-47.1	-54.9	1.9	0.4	9.73e-02
4809	ok	0.24	0.5	1.77e-02	5.7	5.7	2.5	2.5	35.5	16.2	-3.5	0.6	0.1	6.37e-02
4868	ok	0.24	0.2	7.93e-03	5.7	5.7	2.5	2.5	-9.8	-1.1	-4.8	1.7	0.3	0.2
4927	ok	0.24	4.78e-02	4.76e-03	5.7	5.7	2.5	2.5	-5.7	-1.0	6.1	0.8	9.09e-02	0.2
4986	ok	0.24	2.49e-02	2.48e-03	5.7	5.7	2.5	2.5	-0.2	1.5	-2.4	0.3	-2.99e-02	1.78e-02

Nodo	**x/d**	**V N/M**	**ver. rid**	**Af pr-**	**Af pr+**	**Af sec-**	**Af sec+**	**N z**	**N o**	**N zo**	**M z**	**M o**	**M zo**
								-527.99	-93.54	-54.87	-3.43	-0.76	-0.31
	0.24	0.85	0.22	5.65	5.65	2.51	2.51	60.87	34.29	125.76	2.62	0.61	0.16

Nodo	**Stato**	**Max tau**	**Ver V pr**	**Ver V sec**	**Af V pr**	**Af V sec**	**V pr**	**V sec**
		daN/cm2					kN/ m	kN/ m
408	ok	1.61						
467	ok	1.36						
526	ok	0.88						
585	ok	0.60						
644	ok	0.39						
703	ok	0.77						
800	ok	1.83						
829	ok	1.32						
858	ok	1.01						
887	ok	0.62						
916	ok	0.47						
971	ok	0.65						
1008	ok	1.83						
1037	ok	1.21						

1066	ok	1.01						
1095	ok	0.59						
1124	ok	0.38						
1179	ok	0.47						
1242	ok	1.65						
1299	ok	1.24						
1356	ok	0.88						
1413	ok	0.59						
1470	ok	0.32						
1527	ok	0.49						
1564	ok	1.79						
1593	ok	1.26						
1622	ok	0.99						
1651	ok	0.62						
1680	ok	0.38						
1735	ok	0.40						
1772	ok	1.79						
1801	ok	1.25						
1830	ok	0.99						
1859	ok	0.60						
1888	ok	0.40						
1943	ok	0.42						
2006	ok	1.66						
2063	ok	1.24						
2120	ok	0.88						
2177	ok	0.61						
2234	ok	0.34						
2291	ok	0.47						
2328	ok	1.80						
2357	ok	1.26						
2386	ok	0.99						
2415	ok	0.63						
2444	ok	0.38						
2499	ok	0.42						
2536	ok	1.80						
2565	ok	1.28						
2594	ok	1.00						
2623	ok	0.64						
2652	ok	0.45						
2707	ok	0.49						
2770	ok	1.79						
2827	ok	1.28						
2884	ok	0.93						
2941	ok	0.90						
2998	ok	0.74						
3055	ok	0.57						
3092	ok	1.91						
3121	ok	1.28						
3150	ok	1.06						
3179	ok	0.96						
3208	ok	0.79						
3263	ok	0.56						
3300	ok	1.91						
3329	ok	1.30						
3358	ok	1.05						
3387	ok	0.56						
3416	ok	0.40						
3471	ok	0.42						
3540	ok	1.86						
3597	ok	2.01						
3654	ok	1.70						
3711	ok	0.74						
3768	ok	0.31						
3825	ok	0.45						
3892	ok	0.81						
3921	ok	2.55						
3950	ok	1.69						
3979	ok	0.76						
4008	ok	0.34						
4063	ok	0.44						
4403	ok	1.05						
4432	ok Av	6.67	0.30	0.04	7.5	0.9	72.9	8.7
4461	ok	1.69						
4490	ok	0.97						
4519	ok	0.38						
4574	ok	0.60						
4750	ok Av	6.94	0.30	0.09	7.6	2.2	73.2	21.3
4809	ok	1.19						
4868	ok	0.92						

4927	ok	0.32
4986	ok	0.63

Nodo	Max tau	Ver V pr	Ver V sec	Af V pr	Af V sec	V pr	V sec
	6.94	0.30	0.09	7.57	2.19	73.23	21.26

Macro Setto	Spessore	Id Materiale	Id Criterio	Progettazione
	cm			
30	15.00	1	1	Singolo elemento NON DISSIPATIVO

Nodo	Stato	x/d	V N/M	ver. rid	Af pr-	Af pr+	Af sec-	Af sec+	N z	N o	N zo	M z	M o	M zo
									kN/ m	kN/ m	kN/ m	kN	kN	kN
410	ok	0.24	0.7	0.2	5.7	5.7	2.5	2.5	-514.1	-93.3	124.5	3.5	0.5	-6.33e-02
469	ok	0.24	0.5	5.03e-02	5.7	5.7	2.5	2.5	-92.8	-24.1	1.1	-3.4	-0.8	3.59e-02
528	ok	0.24	0.2	3.23e-02	5.7	5.7	2.5	2.5	-71.6	-19.0	-22.9	-2.5	-0.6	3.15e-02
587	ok	0.24	0.2	2.23e-02	5.7	5.7	2.5	2.5	-52.2	-8.9	12.8	-1.7	-0.4	4.30e-02
646	ok	0.24	0.1	2.07e-02	5.7	5.7	2.5	2.5	-37.0	-7.1	-6.2	-0.9	-0.2	2.91e-02
705	ok	0.24	5.78e-02	2.96e-02	5.7	5.7	2.5	2.5	-55.9	-14.6	-23.2	-0.3	3.05e-02	3.10e-02
801	ok	0.24	0.9	0.2	5.7	5.7	2.5	2.5	-452.5	-64.8	84.6	3.6	0.6	0.2
830	ok	0.24	0.5	5.46e-02	5.7	5.7	2.5	2.5	-86.8	18.2	-5.9	-3.1	-0.7	-0.2
859	ok	0.24	0.2	2.95e-02	5.7	5.7	2.5	2.5	-67.8	26.0	-9.5	-2.3	-0.5	-0.2
888	ok	0.24	8.05e-02	2.14e-02	5.7	5.7	2.5	2.5	-50.3	6.3	7.2	-1.5	-0.3	-0.2
917	ok	0.24	4.76e-02	1.94e-02	5.7	5.7	2.5	2.5	-36.8	-12.1	-14.5	-0.7	-0.2	-0.2
973	ok	0.24	6.68e-02	2.50e-02	5.7	5.7	2.5	2.5	-55.4	-10.8	-15.7	-5.70e-02	4.25e-02	-0.3
1009	ok	0.24	0.4	0.1	5.7	5.7	2.5	2.5	-263.8	-33.5	49.2	0.5	0.2	0.4
1038	ok	0.24	0.3	4.67e-02	5.7	5.7	2.5	2.5	-86.5	-42.1	44.9	-2.1	-0.5	0.3
1067	ok	0.24	0.2	3.15e-02	5.7	5.7	2.5	2.5	-44.9	11.5	-11.9	1.7	0.3	-0.3
1096	ok	0.24	0.1	2.15e-02	5.7	5.7	2.5	2.5	-49.4	-3.5	-7.3	1.1	0.2	-0.3
1125	ok	0.24	5.87e-02	2.05e-02	5.7	5.7	2.5	2.5	-45.7	-1.0	-10.7	0.5	0.1	-0.3
1181	ok	0.24	5.65e-02	2.26e-02	5.7	5.7	2.5	2.5	-52.7	5.36e-02	-10.9	-7.79e-02	-4.34e-02	-0.3
1244	ok	0.24	0.3	6.83e-02	5.7	5.7	2.5	2.5	-168.1	-22.5	21.4	-6.12e-02	-2.54e-02	2.85e-02
1301	ok	0.24	0.2	4.22e-02	5.7	5.7	2.5	2.5	-74.7	-20.7	26.2	1.9	0.4	0.1
1358	ok	0.24	0.1	2.62e-02	5.7	5.7	2.5	2.5	-51.6	1.6	-12.6	1.9	0.4	-8.18e-02
1415	ok	0.24	7.97e-02	2.21e-02	5.7	5.7	2.5	2.5	-39.0	-0.1	-15.3	-1.4	-0.3	-8.83e-02
1472	ok	0.24	4.70e-02	2.08e-02	5.7	5.7	2.5	2.5	-40.9	0.8	-13.7	-0.7	-0.1	-8.13e-02
1529	ok	0.24	3.58e-02	2.22e-02	5.7	5.7	2.5	2.5	-53.0	-1.6	-11.5	-0.2	-4.04e-02	-7.50e-02
1565	ok	0.24	0.2	4.61e-02	5.7	5.7	2.5	2.5	-114.6	-5.4	11.4	0.3	8.27e-02	-7.47e-03
1594	ok	0.24	0.1	3.39e-02	5.7	5.7	2.5	2.5	-73.8	-13.6	26.0	2.2	0.5	0.2
1623	ok	0.24	0.1	2.17e-02	5.7	5.7	2.5	2.5	-34.2	-9.3	26.1	1.6	0.4	0.2
1652	ok	0.24	6.99e-02	1.91e-02	5.7	5.7	2.5	2.5	-41.1	-0.8	-13.0	-1.2	-0.2	-0.2
1681	ok	0.24	5.02e-02	1.91e-02	5.7	5.7	2.5	2.5	-42.6	0.3	-14.5	-0.6	-0.1	-0.2
1737	ok	0.24	3.33e-02	2.12e-02	5.7	5.7	2.5	2.5	-50.5	8.54e-02	-11.4	3.40e-02	2.24e-02	-0.2
1773	ok	0.24	0.2	3.77e-02	5.7	5.7	2.5	2.5	-93.9	-4.4	7.9	0.2	2.68e-02	2.67e-02
1802	ok	0.24	0.2	3.06e-02	5.7	5.7	2.5	2.5	-71.2	-10.4	18.7	0.2	2.42e-02	1.20e-02
1831	ok	0.24	0.1	2.18e-02	5.7	5.7	2.5	2.5	-37.5	-11.3	20.1	-1.6	-0.3	0.2
1860	ok	0.24	8.68e-02	1.84e-02	5.7	5.7	2.5	2.5	-33.3	-0.5	-17.4	1.2	0.2	-0.2
1889	ok	0.24	6.54e-02	1.86e-02	5.7	5.7	2.5	2.5	-36.2	0.2	-17.8	0.5	0.1	-0.2
1945	ok	0.24	4.31e-02	1.93e-02	5.7	5.7	2.5	2.5	-45.7	0.4	-11.3	8.85e-03	-3.91e-02	-0.3
2008	ok	0.24	0.2	3.28e-02	5.7	5.7	2.5	2.5	-82.5	-9.4	1.5	1.05e-02	-1.71e-02	2.17e-02
2065	ok	0.24	0.2	2.69e-02	5.7	5.7	2.5	2.5	-63.4	-9.4	14.7	4.34e-02	8.56e-03	1.23e-02
2122	ok	0.24	0.1	2.18e-02	5.7	5.7	2.5	2.5	-37.9	-7.6	18.2	-1.4	-0.3	6.48e-02
2179	ok	0.24	7.20e-02	1.78e-02	5.7	5.7	2.5	2.5	-34.9	-2.8	-18.8	1.3	0.3	-8.72e-02
2236	ok	0.24	4.82e-02	1.73e-02	5.7	5.7	2.5	2.5	-37.3	-2.9	-15.2	0.7	0.1	-8.56e-02
2293	ok	0.24	4.99e-02	1.69e-02	5.7	5.7	2.5	2.5	-38.5	-3.5	-10.8	-0.1	-2.43e-02	-2.36e-03
2329	ok	0.24	0.2	2.48e-02	5.7	5.7	2.5	2.5	-62.0	-0.6	4.7	0.2	7.21e-02	-1.19e-02
2358	ok	0.24	0.1	2.20e-02	5.7	5.7	2.5	2.5	-50.8	-4.5	12.6	0.2	4.85e-02	1.07e-02
2387	ok	0.24	8.93e-02	1.81e-02	5.7	5.7	2.5	2.5	-34.9	-5.1	13.7	0.1	2.48e-02	6.41e-03
2416	ok	0.24	6.97e-02	1.39e-02	5.7	5.7	2.5	2.5	-23.0	-2.0	-16.3	-0.2	-4.71e-02	-5.03e-02
2445	ok	0.24	5.77e-02	1.37e-02	5.7	5.7	2.5	2.5	-28.8	-2.5	-12.6	-0.1	-4.17e-02	-5.14e-02
2501	ok	0.24	4.51e-02	1.61e-02	5.7	5.7	2.5	2.5	-37.0	-2.2	-11.1	1.88e-02	3.81e-02	-5.10e-02
2537	ok	0.24	0.2	2.18e-02	5.7	5.7	2.5	2.5	-45.8	1.3	3.9	-0.2	-7.81e-02	-8.13e-03
2566	ok	0.24	0.1	2.06e-02	5.7	5.7	2.5	2.5	-41.1	-1.4	11.6	-0.2	-4.26e-02	1.22e-02
2595	ok	0.24	9.04e-02	1.86e-02	5.7	5.7	2.5	2.5	-34.6	-3.7	13.3	0.1	2.44e-02	1.59e-02
2624	ok	0.24	9.73e-02	1.43e-02	5.7	5.7	2.5	2.5	-21.1	-3.4	-20.9	0.2	5.95e-02	-5.07e-02
2653	ok	0.24	5.98e-02	1.20e-02	5.7	5.7	2.5	2.5	-10.1	-2.6	-14.6	0.2	3.14e-02	-4.86e-02
2709	ok	0.24	4.88e-02	1.44e-02	5.7	5.7	2.5	2.5	-32.6	1.0	-10.9	1.91e-02	-1.19e-02	-5.82e-02
2772	ok	0.24	0.2	2.34e-02	5.7	5.7	2.5	2.5	-36.9	-2.5	3.7	-3.5	-0.7	-2.00e-02
2829	ok	0.24	0.1	1.95e-02	5.7	5.7	2.5	2.5	-28.8	-2.2	7.2	-2.8	-0.6	-0.1
2886	ok	0.24	0.1	1.82e-02	5.7	5.7	2.5	2.5	-32.3	-3.2	14.4	9.24e-02	2.13e-02	6.44e-03
2943	ok	0.24	0.1	1.94e-02	5.7	5.7	2.5	2.5	-35.2	-5.6	-14.7	-1.7	-0.3	-0.1
3000	ok	0.24	8.40e-02	1.38e-02	5.7	5.7	2.5	2.5	-6.2	1.3	-8.7	0.3	5.19e-02	1.24e-02
3057	ok	0.24	3.12e-02	1.23e-02	5.7	5.7	2.5	2.5	-28.1	-1.1	-8.7	0.1	2.46e-02	-4.46e-03
3093	ok	0.24	0.2	1.53e-02	5.7	5.7	2.5	2.5	-33.8	-6.02e-02	2.9	-3.1	-0.5	-0.2

3122	ok	0.24	0.1	1.63e-02	5.7	5.7	2.5	2.5	-30.8	-1.0	6.2	-2.4	-0.4	-0.3
3151	ok	0.24	0.1	1.40e-02	5.7	5.7	2.5	2.5	-10.6	2.7	-16.5	-1.8	-0.3	-0.2
3180	ok	0.24	7.71e-02	1.85e-02	5.7	5.7	2.5	2.5	-31.8	2.2	-7.9	-1.4	-0.2	-0.2
3209	ok	0.24	8.01e-02	1.89e-02	5.7	5.7	2.5	2.5	-36.5	-10.0	-18.8	-0.1	-5.25e-02	-8.68e-02
3265	ok	0.24	6.98e-02	9.55e-03	5.7	5.7	2.5	2.5	-16.8	-7.0	-10.4	1.90e-02	6.36e-03	-5.19e-02
3301	ok	0.24	0.2	1.34e-02	5.7	5.7	2.5	2.5	-27.3	-9.82e-02	-0.6	0.3	1.57e-02	-3.76e-02
3330	ok	0.24	0.1	1.61e-02	5.7	5.7	2.5	2.5	-25.7	0.7	6.6	2.5	0.5	-0.2
3359	ok	0.24	0.1	1.46e-02	5.7	5.7	2.5	2.5	-23.5	-1.8	5.9	1.8	0.4	-0.3
3388	ok	0.24	8.09e-02	9.71e-03	5.7	5.7	2.5	2.5	-2.7	-3.3	-8.5	0.1	4.43e-02	-7.35e-02
3417	ok	0.24	6.27e-02	1.06e-02	5.7	5.7	2.5	2.5	-16.2	1.8	-10.3	0.2	4.67e-02	-4.88e-02
3473	ok	0.24	5.08e-02	7.81e-03	5.7	5.7	2.5	2.5	-13.9	2.4	-5.6	-1.49e-02	-5.81e-02	-5.65e-02
3542	ok	0.24	0.2	1.15e-02	5.7	5.7	2.5	2.5	-22.6	-2.9	-3.3	0.8	9.62e-02	4.17e-02
3599	ok	0.24	0.1	1.81e-02	5.7	5.7	2.5	2.5	-26.6	-0.9	-8.6	-2.5	-0.4	6.72e-02
3656	ok	0.24	0.1	1.19e-02	5.7	5.7	2.5	2.5	-22.1	-3.0	6.7	2.0	0.5	-7.36e-02
3713	ok	0.24	8.60e-02	8.63e-03	5.7	5.7	2.5	2.5	-5.6	-1.6	4.0	-1.0	-0.2	-0.1
3770	ok	0.24	4.17e-02	8.74e-03	5.7	5.7	2.5	2.5	-6.6	-8.11e-02	-6.0	-0.4	-0.1	-5.40e-02
3827	ok	0.24	2.78e-02	5.93e-03	5.7	5.7	2.5	2.5	-11.7	-0.2	-2.4	-0.1	-1.78e-02	8.20e-02
3893	ok	0.24	0.1	1.41e-02	5.7	5.7	2.5	2.5	7.4	0.5	2.2	-0.1	-2.01e-02	4.77e-02
3922	ok	0.24	0.2	2.42e-02	5.7	5.7	2.5	2.5	-44.0	13.8	14.1	-4.64e-02	2.48e-02	8.89e-02
3951	ok	0.24	0.1	1.75e-02	5.7	5.7	2.5	2.5	3.3	-8.5	-11.9	-1.5	2.74e-02	-0.3
3980	ok	0.24	9.92e-02	4.97e-03	5.7	5.7	2.5	2.5	-6.7	-3.0	5.8	-0.8	-0.2	-0.2
4009	ok	0.24	4.36e-02	4.01e-03	5.7	5.7	2.5	2.5	-2.0	-1.1	5.3	-0.3	-9.43e-02	-0.2
4065	ok	0.24	2.79e-02	4.46e-03	5.7	5.7	2.5	2.5	-10.2	8.47e-03	-3.2	-0.1	-2.69e-02	0.2
4404	ok	0.24	0.2	0.0	5.7	5.7	2.5	2.5	32.7	27.0	-18.4	-0.2	-0.1	8.44e-02
4433	ok	0.24	0.4	8.20e-02	5.7	5.7	2.5	2.5	-163.5	-61.9	-16.1	1.5	0.4	-7.88e-02
4462	ok	0.24	0.3	1.22e-02	5.7	5.7	2.5	2.5	24.4	4.0	10.8	0.5	6.82e-02	3.35e-02
4491	ok	0.24	0.1	5.42e-03	5.7	5.7	2.5	2.5	-5.3	-1.2	6.7	2.4	0.4	-8.60e-02
4520	ok	0.24	4.53e-02	3.80e-03	5.7	5.7	2.5	2.5	-5.0	-2.3	4.1	0.7	6.01e-02	-0.1
4576	ok	0.24	3.28e-02	3.04e-03	5.7	5.7	2.5	2.5	-3.1	-0.2	-2.9	0.3	3.07e-02	0.1
4752	ok	0.24	0.4	8.88e-02	5.7	5.7	2.5	2.5	-168.5	-28.2	-39.2	2.1	0.3	0.2
4811	ok	0.24	0.4	1.39e-02	5.7	5.7	2.5	2.5	97.4	21.6	30.8	-5.91e-02	6.66e-02	-6.18e-03
4870	ok	0.24	0.1	7.87e-03	5.7	5.7	2.5	2.5	-11.5	-3.3	-4.2	1.6	0.3	0.1
4929	ok	0.24	4.20e-02	4.96e-03	5.7	5.7	2.5	2.5	-6.4	-3.7	6.8	0.8	9.31e-02	0.1
4988	ok	0.24	2.02e-02	2.57e-03	5.7	5.7	2.5	2.5	-1.8	1.6	-2.1	0.3	-6.26e-03	2.40e-02

Nodo	**x/d**	**V N/M**	**ver. rid**	**Af pr-**	**Af pr+**	**Af sec-**	**Af sec+**	**N z**	**N o**	**N zo**	**M z**	**M o**	**M zo**
								-514.15	-93.28	-39.23	-3.48	-0.76	-0.30
	0.24	0.93	0.22	5.65	5.65	2.51	2.51	97.41	27.01	124.45	3.59	0.59	0.40

Nodo	**Stato**	**Max tau**	**Ver V pr**	**Ver V sec**	**Af V pr**	**Af V sec**	**V pr**	**V sec**
		daN/cm2					kN/ m	kN/ m
410	ok	1.52						
469	ok	1.31						
528	ok	0.86						
587	ok	0.59						
646	ok	0.36						
705	ok	0.80						
801	ok	1.75						
830	ok	1.26						
859	ok	0.98						
888	ok	0.61						
917	ok	0.44						
973	ok	0.67						
1009	ok	1.76						
1038	ok	1.16						
1067	ok	0.97						
1096	ok	0.57						
1125	ok	0.40						
1181	ok	0.45						
1244	ok	1.66						
1301	ok	1.24						
1358	ok	0.87						
1415	ok	0.59						
1472	ok	0.33						
1529	ok	0.51						
1565	ok	1.80						
1594	ok	1.26						
1623	ok	0.99						
1652	ok	0.61						
1681	ok	0.38						
1737	ok	0.39						
1773	ok	1.80						
1802	ok	1.25						
1831	ok	0.99						
1860	ok	0.59						
1889	ok	0.39						
1945	ok	0.41						

2008	ok	1.64						
2065	ok	1.24						
2122	ok	0.86						
2179	ok	0.59						
2236	ok	0.33						
2293	ok	0.47						
2329	ok	1.78						
2358	ok	1.23						
2387	ok	0.96						
2416	ok	0.61						
2445	ok	0.38						
2501	ok	0.42						
2537	ok	1.78						
2566	ok	1.24						
2595	ok	0.97						
2624	ok	0.62						
2653	ok	0.44						
2709	ok	0.47						
2772	ok	1.81						
2829	ok	1.27						
2886	ok	0.92						
2943	ok	0.87						
3000	ok	0.74						
3057	ok	0.54						
3093	ok	1.92						
3122	ok	1.27						
3151	ok	1.04						
3180	ok	0.94						
3209	ok	0.79						
3265	ok	0.54						
3301	ok	1.92						
3330	ok	1.30						
3359	ok	1.04						
3388	ok	0.55						
3417	ok	0.39						
3473	ok	0.40						
3542	ok	1.87						
3599	ok	1.99						
3656	ok	1.64						
3713	ok	0.68						
3770	ok	0.29						
3827	ok	0.42						
3893	ok	0.80						
3922	ok	2.56						
3951	ok	1.64						
3980	ok	0.70						
4009	ok	0.33						
4065	ok	0.41						
4404	ok	1.05						
4433	ok Av	6.79	0.31	0.04	7.6	1.0	74.0	10.0
4462	ok	1.60						
4491	ok	0.92						
4520	ok	0.35						
4576	ok	0.54						
4752	ok Av	7.01	0.31	0.08	7.7	2.0	74.7	19.8
4811	ok	1.18						
4870	ok	0.88						
4929	ok	0.31						
4988	ok	0.56						
Nodo		**Max tau**	**Ver V pr**	**Ver V sec**	**Af V pr**	**Af V sec**	**V pr**	**V sec**
		7.01	0.31	0.08	7.71	2.04	74.71	19.77

Macro Setto	Spessore	Id Materiale	Id Criterio	Progettazione
	cm			
31	15.00	1	1	Singolo elemento NON DISSIPATIVO

Nodo	Stato	x/d	V N/M	ver. rid	Af pr-	Af pr+	Af sec-	Af sec+	N z	N o	N zo	M z	M o	M zo
									kN/ m	kN/ m	kN/ m	kN	kN	kN
651	ok	0.24	0.1	7.05e-02	5.7	5.7	2.5	2.5	-160.4	-29.3	-33.3	-2.0	-0.2	0.1
652	ok	0.24	0.1	3.50e-02	5.7	5.7	2.5	2.5	-49.3	-9.6	-4.4	-1.3	-0.4	0.2
653	ok	0.24	9.15e-02	2.82e-02	5.7	5.7	2.5	2.5	-51.7	-8.7	-32.7	-1.2	-0.1	0.2
654	ok	0.24	0.1	2.99e-02	5.7	5.7	2.5	2.5	-50.5	-9.6	-16.1	-0.9	-0.2	0.3

655	ok	0.24	9.89e-02	2.81e-02	5.7	5.7	2.5	2.5	-50.2	-8.0	-20.0	-1.1	-0.1	0.2
656	ok	0.24	0.1	3.08e-02	5.7	5.7	2.5	2.5	-52.2	-11.7	-17.2	-0.9	-0.2	0.3
657	ok	0.24	0.1	2.86e-02	5.7	5.7	2.5	2.5	-50.3	-9.1	-21.4	-1.1	-0.1	0.2
658	ok	0.24	0.1	3.11e-02	5.7	5.7	2.5	2.5	-51.9	-12.4	-18.3	-0.9	-0.2	0.3
659	ok	0.24	0.1	2.88e-02	5.7	5.7	2.5	2.5	-50.1	-9.4	-22.5	-1.1	-0.1	0.2
660	ok	0.24	0.1	3.14e-02	5.7	5.7	2.5	2.5	-51.3	-12.3	-40.6	-0.9	-0.3	0.2
661	ok	0.24	0.1	2.89e-02	5.7	5.7	2.5	2.5	-49.7	-9.2	-23.6	-1.1	-0.1	0.2
662	ok	0.24	0.2	3.14e-02	5.7	5.7	2.5	2.5	-50.8	-12.3	-41.1	-0.8	-0.3	0.2
663	ok	0.24	0.1	2.90e-02	5.7	5.7	2.5	2.5	-48.9	-9.0	-24.4	-1.1	-0.2	0.2
664	ok	0.24	0.2	3.14e-02	5.7	5.7	2.5	2.5	-50.1	-11.8	-41.8	-0.9	-0.3	0.2
665	ok	0.24	0.1	2.90e-02	5.7	5.7	2.5	2.5	-48.5	-9.1	-25.3	-1.1	-0.2	0.2
666	ok	0.24	0.2	3.14e-02	5.7	5.7	2.5	2.5	-49.5	-11.1	-42.5	-0.9	-0.3	0.2
667	ok	0.24	0.1	2.90e-02	5.7	5.7	2.5	2.5	-48.0	-8.4	-26.0	-1.1	-0.2	0.2
668	ok	0.24	0.2	3.14e-02	5.7	5.7	2.5	2.5	-48.9	-10.2	-43.1	-0.8	-0.3	0.2
669	ok	0.24	0.1	2.89e-02	5.7	5.7	2.5	2.5	-47.3	-7.2	-27.0	-1.0	-0.2	0.2
670	ok	0.24	0.2	3.14e-02	5.7	5.7	2.5	2.5	-48.2	-8.9	-44.0	-0.8	-0.3	0.2
671	ok	0.24	0.1	2.88e-02	5.7	5.7	2.5	2.5	-46.8	-6.2	-27.5	-1.0	-0.2	0.2
672	ok	0.24	0.2	3.12e-02	5.7	5.7	2.5	2.5	-47.7	-7.8	-44.5	-0.8	-0.3	0.2
673	ok	0.24	0.1	2.85e-02	5.7	5.7	2.5	2.5	-46.3	-5.1	-27.8	-1.0	-0.2	0.2
674	ok	0.24	0.2	3.08e-02	5.7	5.7	2.5	2.5	-47.2	-6.8	-44.0	-0.8	-0.3	0.2
675	ok	0.24	0.1	2.81e-02	5.7	5.7	2.5	2.5	-45.4	-4.4	-27.6	-1.0	-0.2	0.2
676	ok	0.24	0.2	3.04e-02	5.7	5.7	2.5	2.5	-46.5	-6.0	-43.7	-0.8	-0.3	0.2
677	ok	0.24	0.1	2.77e-02	5.7	5.7	2.5	2.5	-57.1	-4.2	11.7	-1.1	-0.1	6.94e-02
678	ok	0.24	0.2	3.01e-02	5.7	5.7	2.5	2.5	-46.0	-5.2	-43.6	-0.8	-0.3	0.2
679	ok	0.24	0.1	2.75e-02	5.7	5.7	2.5	2.5	-57.1	-4.4	11.6	-1.1	-0.1	6.91e-02
680	ok	0.24	0.2	3.03e-02	5.7	5.7	2.5	2.5	-60.8	-7.0	-26.9	-0.9	-0.3	-6.01e-02
681	ok	0.24	0.1	2.79e-02	5.7	5.7	2.5	2.5	-44.9	-3.7	28.0	-1.0	-0.2	-0.2
682	ok	0.24	0.2	3.07e-02	5.7	5.7	2.5	2.5	-46.7	-6.1	44.2	-0.8	-0.3	-0.2
683	ok	0.24	0.1	2.83e-02	5.7	5.7	2.5	2.5	-45.4	-4.5	28.0	-1.0	-0.2	-0.2
684	ok	0.24	0.2	3.11e-02	5.7	5.7	2.5	2.5	-47.3	-6.9	44.5	-0.8	-0.3	-0.2
685	ok	0.24	0.1	2.87e-02	5.7	5.7	2.5	2.5	-46.3	-5.2	28.4	-1.0	-0.2	-0.2
686	ok	0.24	0.2	3.15e-02	5.7	5.7	2.5	2.5	-47.7	-7.9	45.1	-0.8	-0.3	-0.2
687	ok	0.24	0.1	2.90e-02	5.7	5.7	2.5	2.5	-46.8	-6.4	28.1	-1.0	-0.2	-0.2
688	ok	0.24	0.2	3.16e-02	5.7	5.7	2.5	2.5	-48.2	-9.1	44.5	-0.8	-0.3	-0.2
689	ok	0.24	0.1	2.91e-02	5.7	5.7	2.5	2.5	-47.3	-7.7	27.1	-1.0	-0.2	-0.2
690	ok	0.24	0.2	3.16e-02	5.7	5.7	2.5	2.5	-48.9	-10.4	43.5	-0.8	-0.3	-0.2
691	ok	0.24	0.1	2.91e-02	5.7	5.7	2.5	2.5	-47.9	-8.7	26.3	-1.0	-0.2	-0.2
692	ok	0.24	0.2	3.15e-02	5.7	5.7	2.5	2.5	-49.5	-11.3	42.7	-0.8	-0.3	-0.2
693	ok	0.24	0.1	2.91e-02	5.7	5.7	2.5	2.5	-48.4	-9.4	25.4	-1.1	-0.2	-0.2
694	ok	0.24	0.2	3.14e-02	5.7	5.7	2.5	2.5	-50.1	-12.0	41.8	-0.9	-0.3	-0.2
695	ok	0.24	0.1	2.90e-02	5.7	5.7	2.5	2.5	-48.8	-9.2	24.4	-1.1	-0.2	-0.2
696	ok	0.24	0.2	3.14e-02	5.7	5.7	2.5	2.5	-50.7	-12.4	41.1	-0.8	-0.3	-0.2
697	ok	0.24	0.1	2.89e-02	5.7	5.7	2.5	2.5	-49.6	-9.2	23.7	-1.1	-0.1	-0.2
698	ok	0.24	0.1	3.14e-02	5.7	5.7	2.5	2.5	-51.2	-12.3	40.7	-0.8	-0.3	-0.2
699	ok	0.24	0.1	2.88e-02	5.7	5.7	2.5	2.5	-49.9	-9.4	22.6	-1.1	-0.1	-0.2
700	ok	0.24	0.1	3.11e-02	5.7	5.7	2.5	2.5	-51.8	-12.5	18.4	-0.9	-0.2	-0.3
701	ok	0.24	0.1	2.85e-02	5.7	5.7	2.5	2.5	-50.2	-9.2	21.4	-1.1	-0.1	-0.2
702	ok	0.24	0.1	3.08e-02	5.7	5.7	2.5	2.5	-52.1	-11.7	17.3	-0.9	-0.2	-0.3
703	ok	0.24	9.89e-02	2.81e-02	5.7	5.7	2.5	2.5	-50.0	-8.0	20.1	-1.1	-0.1	-0.2
704	ok	0.24	0.1	2.99e-02	5.7	5.7	2.5	2.5	-50.3	-9.6	16.2	-0.9	-0.2	-0.3
705	ok	0.24	9.13e-02	2.81e-02	5.7	5.7	2.5	2.5	-51.5	-8.6	32.7	-1.2	-0.1	-0.2
706	ok	0.24	0.1	3.48e-02	5.7	5.7	2.5	2.5	-49.1	-9.5	4.5	-1.2	-0.4	-0.2
707	ok	0.24	0.1	6.99e-02	5.7	5.7	2.5	2.5	-159.0	-29.1	33.3	-1.9	-0.2	-0.1
919	ok	0.24	9.87e-02	5.06e-02	5.7	5.7	2.5	2.5	-126.4	-14.2	-9.2	-0.3	0.3	0.2
920	ok	0.24	7.57e-02	3.78e-02	5.7	5.7	2.5	2.5	-55.7	-16.3	-25.4	-0.7	-0.4	0.3
921	ok	0.24	9.53e-02	3.01e-02	5.7	5.7	2.5	2.5	-46.2	-12.6	-25.2	5.30e-02	0.3	0.3
922	ok	0.24	8.56e-02	2.68e-02	5.7	5.7	2.5	2.5	-48.1	-10.3	-23.0	-0.4	-0.3	0.3
923	ok	0.24	9.72e-02	2.83e-02	5.7	5.7	2.5	2.5	-46.6	-11.6	-19.0	7.73e-02	0.3	0.2
924	ok	0.24	9.09e-02	2.71e-02	5.7	5.7	2.5	2.5	-48.5	-9.3	-23.6	-0.3	-0.3	0.3
925	ok	0.24	9.69e-02	2.86e-02	5.7	5.7	2.5	2.5	-46.3	-11.6	-19.9	9.75e-02	0.4	0.2
926	ok	0.24	0.1	2.74e-02	5.7	5.7	2.5	2.5	-48.0	-9.2	-24.6	-0.3	-0.3	0.3
927	ok	0.24	9.75e-02	2.88e-02	5.7	5.7	2.5	2.5	-45.8	-11.6	-20.9	0.3	0.4	0.2
928	ok	0.24	0.1	2.76e-02	5.7	5.7	2.5	2.5	-47.4	-8.9	-25.7	-0.3	-0.3	0.3
929	ok	0.24	0.1	2.91e-02	5.7	5.7	2.5	2.5	-43.4	-10.4	-27.1	5.09e-02	0.3	0.3
930	ok	0.24	0.1	2.76e-02	5.7	5.7	2.5	2.5	-46.8	-8.6	-26.2	-0.3	-0.3	0.3
931	ok	0.24	0.1	2.91e-02	5.7	5.7	2.5	2.5	-42.7	-10.2	-27.9	4.38e-02	0.3	0.3
932	ok	0.24	0.1	2.77e-02	5.7	5.7	2.5	2.5	-46.0	-8.3	-26.9	-0.3	-0.3	0.3
933	ok	0.24	0.1	2.92e-02	5.7	5.7	2.5	2.5	-42.1	-9.8	-28.7	4.10e-02	0.3	0.3
934	ok	0.24	0.1	2.78e-02	5.7	5.7	2.5	2.5	-45.4	-7.7	-27.6	-0.3	-0.4	0.3
935	ok	0.24	0.1	2.93e-02	5.7	5.7	2.5	2.5	-41.6	-9.3	-29.4	4.04e-02	0.3	0.3
936	ok	0.24	0.1	2.78e-02	5.7	5.7	2.5	2.5	-44.7	-6.9	-28.6	-0.3	-0.4	0.3
937	ok	0.24	0.1	2.93e-02	5.7	5.7	2.5	2.5	-41.1	-8.7	-30.0	3.97e-02	0.3	0.3
938	ok	0.24	0.1	2.78e-02	5.7	5.7	2.5	2.5	-42.8	-6.4	-34.9	-0.1	-0.3	0.3
939	ok	0.24	0.1	2.93e-02	5.7	5.7	2.5	2.5	-40.7	-7.9	-30.6	3.75e-02	0.3	0.3
940	ok	0.24	0.1	2.77e-02	5.7	5.7	2.5	2.5	-42.5	-5.7	-35.2	-0.1	-0.3	0.3
941	ok	0.24	0.1	2.92e-02	5.7	5.7	2.5	2.5	-40.4	-7.2	-30.1	4.19e-02	0.3	0.3
942	ok	0.24	0.1	2.73e-02	5.7	5.7	2.5	2.5	-42.0	-0.5	-34.7	-0.1	-0.3	0.3
943	ok	0.24	0.1	2.81e-02	5.7	5.7	2.5	2.5	-39.7	-6.7	-29.9	3.74e-02	0.3	0.3
944	ok	0.24	0.1	2.70e-02	5.7	5.7	2.5	2.5	-41.3	-1.1	-34.6	-0.1	-0.3	0.3

945	ok	0.24	0.1	2.78e-02	5.7	5.7	2.5	2.5	-39.0	-6.4	-29.7	3.66e-02	0.3	0.3
946	ok	0.24	0.1	2.70e-02	5.7	5.7	2.5	2.5	-42.4	-5.8	-37.4	-0.2	-0.2	0.3
947	ok	0.24	0.1	2.79e-02	5.7	5.7	2.5	2.5	-40.4	-6.8	23.8	0.2	0.4	-0.2
948	ok	0.24	0.1	2.71e-02	5.7	5.7	2.5	2.5	-42.5	-5.6	-37.3	-0.2	-0.2	0.3
949	ok	0.24	0.1	2.78e-02	5.7	5.7	2.5	2.5	-40.8	-7.0	24.0	0.2	0.4	-0.2
950	ok	0.24	0.1	2.73e-02	5.7	5.7	2.5	2.5	-43.0	-1.1	29.3	-0.2	-0.4	-0.3
951	ok	0.24	0.1	2.83e-02	5.7	5.7	2.5	2.5	-41.5	-7.4	24.1	0.2	0.4	-0.2
952	ok	0.24	0.1	2.76e-02	5.7	5.7	2.5	2.5	-43.5	-0.6	29.5	-0.3	-0.4	-0.3
953	ok	0.24	0.1	2.95e-02	5.7	5.7	2.5	2.5	-42.0	-8.0	24.4	0.2	0.4	-0.2
954	ok	0.24	0.1	2.80e-02	5.7	5.7	2.5	2.5	-43.9	-5.8	30.1	-0.3	-0.4	-0.3
955	ok	0.24	0.1	2.96e-02	5.7	5.7	2.5	2.5	-42.3	-8.8	25.0	0.2	0.4	-0.2
956	ok	0.24	0.1	2.80e-02	5.7	5.7	2.5	2.5	-44.2	-6.5	29.6	-0.3	-0.4	-0.3
957	ok	0.24	0.1	2.95e-02	5.7	5.7	2.5	2.5	-42.9	-9.7	24.1	0.2	0.4	-0.2
958	ok	0.24	0.1	2.80e-02	5.7	5.7	2.5	2.5	-44.7	-7.1	28.9	-0.3	-0.4	-0.3
959	ok	0.24	0.1	2.94e-02	5.7	5.7	2.5	2.5	-43.4	-10.3	23.4	0.2	0.4	-0.2
960	ok	0.24	0.1	2.78e-02	5.7	5.7	2.5	2.5	-45.4	-7.9	27.8	-0.3	-0.3	-0.3
961	ok	0.24	0.1	2.92e-02	5.7	5.7	2.5	2.5	-43.9	-10.8	22.6	0.2	0.4	-0.2
962	ok	0.24	0.1	2.77e-02	5.7	5.7	2.5	2.5	-46.0	-8.4	26.9	-0.3	-0.3	-0.3
963	ok	0.24	0.1	2.90e-02	5.7	5.7	2.5	2.5	-44.6	-11.1	21.9	0.2	0.4	-0.2
964	ok	0.24	0.1	2.76e-02	5.7	5.7	2.5	2.5	-46.7	-8.7	26.2	-0.3	-0.3	-0.3
965	ok	0.24	0.1	2.91e-02	5.7	5.7	2.5	2.5	-45.4	-11.4	21.3	0.3	0.4	-0.2
966	ok	0.24	0.1	2.76e-02	5.7	5.7	2.5	2.5	-47.4	-9.0	25.9	-0.3	-0.3	-0.3
967	ok	0.24	9.78e-02	2.88e-02	5.7	5.7	2.5	2.5	-45.7	-11.6	21.0	0.3	0.3	-0.2
968	ok	0.24	0.1	2.74e-02	5.7	5.7	2.5	2.5	-47.9	-9.2	24.7	-0.3	-0.3	-0.3
969	ok	0.24	9.62e-02	2.85e-02	5.7	5.7	2.5	2.5	-46.2	-11.6	20.0	9.58e-02	0.4	-0.2
970	ok	0.24	9.10e-02	2.71e-02	5.7	5.7	2.5	2.5	-48.4	-9.3	23.6	-0.3	-0.3	-0.3
971	ok	0.24	9.65e-02	2.82e-02	5.7	5.7	2.5	2.5	-46.5	-11.5	19.1	7.57e-02	0.3	-0.2
972	ok	0.24	8.51e-02	2.68e-02	5.7	5.7	2.5	2.5	-47.9	-10.3	23.0	-0.4	-0.3	-0.2
973	ok	0.24	9.41e-02	2.99e-02	5.7	5.7	2.5	2.5	-46.0	-12.5	25.2	5.27e-02	0.3	-0.3
974	ok	0.24	7.54e-02	3.75e-02	5.7	5.7	2.5	2.5	-55.5	-16.2	25.4	-0.7	-0.4	-0.3
975	ok	0.24	9.86e-02	5.03e-02	5.7	5.7	2.5	2.5	-125.4	-14.1	9.3	-0.3	0.3	-0.2
1127	ok	0.24	7.86e-02	3.69e-02	5.7	5.7	2.5	2.5	-92.1	-4.9	-7.1	0.3	0.2	0.2
1128	ok	0.24	8.94e-02	3.13e-02	5.7	5.7	2.5	2.5	-73.0	-11.3	-14.7	0.2	-5.59e-02	0.2
1129	ok	0.24	6.98e-02	2.67e-02	5.7	5.7	2.5	2.5	-54.9	-12.9	-18.7	0.2	0.1	0.3
1130	ok	0.24	6.95e-02	2.52e-02	5.7	5.7	2.5	2.5	-43.8	-9.7	-28.3	0.1	-1.83e-02	0.3
1131	ok	0.24	7.63e-02	2.51e-02	5.7	5.7	2.5	2.5	-40.5	-9.8	-32.9	0.1	0.1	0.3
1132	ok	0.24	7.69e-02	2.49e-02	5.7	5.7	2.5	2.5	-43.1	-8.4	-28.3	0.1	-2.05e-02	0.3
1133	ok	0.24	8.13e-02	2.52e-02	5.7	5.7	2.5	2.5	-40.0	-9.1	-33.7	0.1	0.1	0.3
1134	ok	0.24	8.12e-02	2.51e-02	5.7	5.7	2.5	2.5	-42.6	-8.3	-29.3	0.1	-2.06e-02	0.3
1135	ok	0.24	9.02e-02	2.55e-02	5.7	5.7	2.5	2.5	-39.7	-9.2	-34.8	0.1	0.1	0.3
1136	ok	0.24	8.77e-02	2.54e-02	5.7	5.7	2.5	2.5	-42.3	-8.1	-30.3	0.1	-2.37e-02	0.3
1137	ok	0.24	9.80e-02	2.59e-02	5.7	5.7	2.5	2.5	-39.3	-9.1	-36.0	0.1	0.1	0.3
1138	ok	0.24	9.53e-02	2.54e-02	5.7	5.7	2.5	2.5	-41.7	-8.0	-30.8	0.1	-2.62e-02	0.3
1139	ok	0.24	0.1	2.59e-02	5.7	5.7	2.5	2.5	-38.5	-9.0	-36.6	0.1	0.1	0.3
1140	ok	0.24	0.1	2.54e-02	5.7	5.7	2.5	2.5	-40.9	-7.8	-31.7	0.1	-2.15e-02	0.3
1141	ok	0.24	0.1	2.60e-02	5.7	5.7	2.5	2.5	-37.9	-8.8	-37.5	0.1	0.1	0.3
1142	ok	0.24	0.1	2.56e-02	5.7	5.7	2.5	2.5	-40.4	-7.4	-32.5	0.1	-2.12e-02	0.3
1143	ok	0.24	0.1	2.62e-02	5.7	5.7	2.5	2.5	-37.4	-8.5	-38.3	0.1	0.1	0.3
1144	ok	0.24	0.1	2.57e-02	5.7	5.7	2.5	2.5	-39.9	-7.0	-33.2	0.1	-2.08e-02	0.3
1145	ok	0.24	0.1	2.63e-02	5.7	5.7	2.5	2.5	-37.0	-8.2	-39.0	0.1	0.1	0.3
1146	ok	0.24	0.1	2.58e-02	5.7	5.7	2.5	2.5	-39.5	-6.5	-34.1	0.1	-2.27e-02	0.3
1147	ok	0.24	0.1	2.65e-02	5.7	5.7	2.5	2.5	-36.7	-7.6	-39.8	0.1	0.1	0.3
1148	ok	0.24	0.1	2.58e-02	5.7	5.7	2.5	2.5	-39.3	-6.1	-34.4	0.1	-2.63e-02	0.3
1149	ok	0.24	0.1	2.65e-02	5.7	5.7	2.5	2.5	-36.5	-7.1	-40.2	0.1	0.1	0.3
1150	ok	0.24	0.1	2.54e-02	5.7	5.7	2.5	2.5	-38.8	-5.7	-33.8	0.1	-2.83e-02	0.3
1151	ok	0.24	0.1	2.60e-02	5.7	5.7	2.5	2.5	-35.8	-6.8	-39.6	0.1	0.1	0.3
1152	ok	0.24	0.1	2.47e-02	5.7	5.7	2.5	2.5	-38.0	-5.5	-33.6	0.1	-2.31e-02	0.3
1153	ok	0.24	0.1	2.57e-02	5.7	5.7	2.5	2.5	-35.0	-6.6	-39.5	0.1	0.1	0.3
1154	ok	0.24	0.1	2.46e-02	5.7	5.7	2.5	2.5	-37.6	-5.2	-33.6	0.1	-2.23e-02	0.3
1155	ok	0.24	0.1	2.58e-02	5.7	5.7	2.5	2.5	-34.8	-6.4	-39.4	0.1	0.1	0.3
1156	ok	0.24	0.1	2.46e-02	5.7	5.7	2.5	2.5	-37.9	-5.1	-33.5	0.1	-2.18e-02	0.3
1157	ok	0.24	0.1	2.60e-02	5.7	5.7	2.5	2.5	-35.4	-6.3	-39.2	0.1	0.1	0.3
1158	ok	0.24	0.1	2.50e-02	5.7	5.7	2.5	2.5	-38.4	-5.5	34.3	0.1	-2.36e-02	-0.3
1159	ok	0.24	0.1	2.63e-02	5.7	5.7	2.5	2.5	-34.1	-6.5	-38.9	0.1	0.1	0.3
1160	ok	0.24	0.1	2.57e-02	5.7	5.7	2.5	2.5	-39.0	-5.8	34.4	0.1	-2.86e-02	-0.3
1161	ok	0.24	0.1	2.68e-02	5.7	5.7	2.5	2.5	-36.6	-7.2	40.8	0.1	0.1	-0.3
1162	ok	0.24	0.1	2.61e-02	5.7	5.7	2.5	2.5	-39.3	-6.2	35.1	0.1	-2.63e-02	-0.3
1163	ok	0.24	0.1	2.67e-02	5.7	5.7	2.5	2.5	-36.6	-7.8	40.4	0.1	0.1	-0.3
1164	ok	0.24	0.1	2.60e-02	5.7	5.7	2.5	2.5	-39.4	-6.7	34.6	0.1	-2.23e-02	-0.3
1165	ok	0.24	0.1	2.65e-02	5.7	5.7	2.5	2.5	-36.9	-8.3	39.3	0.1	0.1	-0.3
1166	ok	0.24	0.1	2.58e-02	5.7	5.7	2.5	2.5	-39.9	-7.2	33.6	0.1	-2.06e-02	-0.3
1167	ok	0.24	0.1	2.62e-02	5.7	5.7	2.5	2.5	-37.3	-8.6	38.4	0.1	0.1	-0.3
1168	ok	0.24	0.1	2.56e-02	5.7	5.7	2.5	2.5	-40.3	-7.5	32.7	0.1	-2.09e-02	-0.3
1169	ok	0.24	0.1	2.60e-02	5.7	5.7	2.5	2.5	-37.8	-8.9	37.5	0.1	0.1	-0.3
1170	ok	0.24	0.1	2.54e-02	5.7	5.7	2.5	2.5	-40.9	-7.9	31.7	0.1	-2.12e-02	-0.3
1171	ok	0.24	0.1	2.58e-02	5.7	5.7	2.5	2.5	-38.4	-9.1	36.5	0.1	0.1	-0.3
1172	ok	0.24	9.60e-02	2.53e-02	5.7	5.7	2.5	2.5	-41.7	-8.1	30.7	0.1	-2.59e-02	-0.3
1173	ok	0.24	9.85e-02	2.59e-02	5.7	5.7	2.5	2.5	-39.4	-9.1	36.0	0.1	0.1	-0.3
1174	ok	0.24	8.78e-02	2.54e-02	5.7	5.7	2.5	2.5	-42.3	-8.1	30.4	0.1	-2.33e-02	-0.3

1175	ok	0.24	9.03e-02	2.55e-02	5.7	5.7	2.5	2.5	-39.6	-9.2	34.8	0.1	0.1	-0.3
1176	ok	0.24	8.08e-02	2.51e-02	5.7	5.7	2.5	2.5	-42.6	-8.3	29.3	0.1	-2.01e-02	-0.3
1177	ok	0.24	8.16e-02	2.51e-02	5.7	5.7	2.5	2.5	-39.9	-9.1	33.6	0.1	0.1	-0.3
1178	ok	0.24	7.65e-02	2.48e-02	5.7	5.7	2.5	2.5	-43.0	-8.4	28.3	0.1	-2.00e-02	-0.3
1179	ok	0.24	7.57e-02	2.50e-02	5.7	5.7	2.5	2.5	-40.3	-9.8	32.9	0.1	0.1	-0.3
1180	ok	0.24	6.92e-02	2.52e-02	5.7	5.7	2.5	2.5	-43.7	-9.6	28.3	0.1	-1.78e-02	-0.3
1181	ok	0.24	6.90e-02	2.66e-02	5.7	5.7	2.5	2.5	-43.9	-11.9	26.6	7.91e-02	5.98e-02	-0.3
1182	ok	0.24	8.95e-02	3.12e-02	5.7	5.7	2.5	2.5	-72.6	-11.2	14.6	0.2	-5.52e-02	-0.2
1183	ok	0.24	7.90e-02	3.67e-02	5.7	5.7	2.5	2.5	-91.6	-4.9	7.2	0.3	0.2	-0.2
1475	ok	0.24	8.12e-02	3.17e-02	5.7	5.7	2.5	2.5	-78.8	-8.3	7.0	-9.67e-02	1.97e-03	0.2
1476	ok	0.24	0.1	2.82e-02	5.7	5.7	2.5	2.5	-47.6	-4.8	-22.2	-0.2	-9.07e-02	-0.1
1477	ok	0.24	0.1	2.57e-02	5.7	5.7	2.5	2.5	-44.2	-5.3	-26.6	-0.2	-5.52e-03	-0.2
1478	ok	0.24	0.1	2.41e-02	5.7	5.7	2.5	2.5	-48.5	-8.0	-24.0	4.52e-02	-1.82e-02	-4.33e-03
1479	ok	0.24	8.01e-02	2.36e-02	5.7	5.7	2.5	2.5	-47.7	-7.8	-23.1	7.30e-03	4.01e-02	-3.91e-02
1480	ok	0.24	9.17e-02	2.32e-02	5.7	5.7	2.5	2.5	-39.1	-7.3	-27.2	0.1	3.06e-02	0.3
1481	ok	0.24	8.18e-02	2.30e-02	5.7	5.7	2.5	2.5	-47.5	-7.1	-21.7	7.03e-03	2.87e-02	-3.76e-02
1482	ok	0.24	9.42e-02	2.33e-02	5.7	5.7	2.5	2.5	-38.5	-7.1	-28.0	0.1	3.23e-02	0.3
1483	ok	0.24	8.46e-02	2.32e-02	5.7	5.7	2.5	2.5	-35.7	-6.9	-26.7	3.10e-02	3.76e-03	0.3
1484	ok	0.24	9.65e-02	2.37e-02	5.7	5.7	2.5	2.5	-38.2	-7.0	-29.0	0.2	3.28e-02	0.3
1485	ok	0.24	8.82e-02	2.36e-02	5.7	5.7	2.5	2.5	-35.9	-7.2	-33.2	8.43e-02	5.95e-02	0.2
1486	ok	0.24	9.96e-02	2.36e-02	5.7	5.7	2.5	2.5	-32.1	-5.9	-30.3	-0.1	-8.76e-02	0.3
1487	ok	0.24	9.34e-02	2.35e-02	5.7	5.7	2.5	2.5	-35.0	-7.2	-33.6	7.93e-02	5.28e-02	0.2
1488	ok	0.24	0.1	2.37e-02	5.7	5.7	2.5	2.5	-31.6	-5.8	-30.9	-0.1	-8.15e-02	0.3
1489	ok	0.24	9.87e-02	2.36e-02	5.7	5.7	2.5	2.5	-34.4	-6.9	-34.4	7.50e-02	5.64e-02	0.3
1490	ok	0.24	0.1	2.38e-02	5.7	5.7	2.5	2.5	-31.2	-5.5	-31.6	-0.1	-8.00e-02	0.3
1491	ok	0.24	0.1	2.38e-02	5.7	5.7	2.5	2.5	-31.7	-5.7	-26.8	-9.46e-02	2.50e-03	0.3
1492	ok	0.24	0.1	2.39e-02	5.7	5.7	2.5	2.5	-30.9	-5.3	-32.4	-0.1	-8.11e-02	0.3
1493	ok	0.24	0.1	2.39e-02	5.7	5.7	2.5	2.5	-31.5	-5.6	-27.5	-9.63e-02	2.00e-03	0.3
1494	ok	0.24	0.1	2.40e-02	5.7	5.7	2.5	2.5	-30.7	-5.3	-33.0	-0.1	-8.32e-02	0.3
1495	ok	0.24	0.1	2.41e-02	5.7	5.7	2.5	2.5	-33.6	-6.3	-36.5	6.73e-02	4.72e-02	0.3
1496	ok	0.24	0.1	2.41e-02	5.7	5.7	2.5	2.5	-30.5	-5.0	-33.5	-0.2	-8.33e-02	0.3
1497	ok	0.24	0.1	2.43e-02	5.7	5.7	2.5	2.5	-33.5	-5.8	-37.1	7.04e-02	5.20e-02	0.2
1498	ok	0.24	0.1	2.37e-02	5.7	5.7	2.5	2.5	-35.0	-5.4	-34.8	0.1	-1.43e-02	0.3
1499	ok	0.24	0.1	2.38e-02	5.7	5.7	2.5	2.5	-32.7	-5.6	-36.6	6.57e-02	4.70e-02	0.2
1500	ok	0.24	0.1	2.34e-02	5.7	5.7	2.5	2.5	-42.6	-5.8	15.4	-0.2	-6.93e-02	3.74e-02
1501	ok	0.24	0.1	2.35e-02	5.7	5.7	2.5	2.5	-31.8	-5.3	-36.4	6.16e-02	5.09e-02	0.2
1502	ok	0.24	0.1	2.33e-02	5.7	5.7	2.5	2.5	-42.5	-5.8	15.1	-0.2	-6.63e-02	3.72e-02
1503	ok	0.24	0.1	2.35e-02	5.7	5.7	2.5	2.5	-46.7	-7.2	19.8	-4.81e-03	2.16e-02	5.57e-02
1504	ok	0.24	0.1	2.35e-02	5.7	5.7	2.5	2.5	-34.1	-4.7	35.1	0.1	-1.32e-02	-0.3
1505	ok	0.24	0.1	2.38e-02	5.7	5.7	2.5	2.5	-32.4	-5.3	36.9	5.74e-02	4.94e-02	-0.2
1506	ok	0.24	0.1	2.38e-02	5.7	5.7	2.5	2.5	-34.7	-5.2	32.4	0.1	1.98e-02	-0.3
1507	ok	0.24	0.1	2.41e-02	5.7	5.7	2.5	2.5	-33.0	-5.7	37.1	6.09e-02	4.56e-02	-0.2
1508	ok	0.24	0.1	2.40e-02	5.7	5.7	2.5	2.5	-35.3	-5.6	32.5	0.1	2.07e-02	-0.3
1509	ok	0.24	0.1	2.46e-02	5.7	5.7	2.5	2.5	-33.6	-5.9	37.8	7.00e-02	5.30e-02	-0.2
1510	ok	0.24	0.1	2.44e-02	5.7	5.7	2.5	2.5	-30.5	-5.0	34.2	-0.1	-8.15e-02	-0.3
1511	ok	0.24	0.1	2.43e-02	5.7	5.7	2.5	2.5	-33.5	-6.5	37.0	6.65e-02	4.56e-02	-0.3
1512	ok	0.24	0.1	2.42e-02	5.7	5.7	2.5	2.5	-30.6	-5.4	33.6	-0.1	-8.07e-02	-0.3
1513	ok	0.24	0.1	2.40e-02	5.7	5.7	2.5	2.5	-33.6	-6.6	36.1	6.87e-02	4.88e-02	-0.3
1514	ok	0.24	0.1	2.40e-02	5.7	5.7	2.5	2.5	-30.9	-5.4	32.7	-0.1	-7.87e-02	-0.3
1515	ok	0.24	0.1	2.38e-02	5.7	5.7	2.5	2.5	-33.9	-6.7	35.3	7.12e-02	5.33e-02	-0.2
1516	ok	0.24	0.1	2.38e-02	5.7	5.7	2.5	2.5	-31.2	-5.6	31.8	-0.1	-7.76e-02	-0.3
1517	ok	0.24	9.83e-02	2.36e-02	5.7	5.7	2.5	2.5	-34.3	-7.0	34.4	7.28e-02	5.48e-02	-0.2
1518	ok	0.24	0.1	2.37e-02	5.7	5.7	2.5	2.5	-31.6	-5.9	30.9	-0.1	-7.92e-02	-0.3
1519	ok	0.24	9.35e-02	2.35e-02	5.7	5.7	2.5	2.5	-34.9	-7.3	33.5	7.66e-02	5.08e-02	-0.2
1520	ok	0.24	9.83e-02	2.36e-02	5.7	5.7	2.5	2.5	-32.1	-6.0	30.2	-0.1	-8.73e-02	-0.3
1521	ok	0.24	8.79e-02	2.37e-02	5.7	5.7	2.5	2.5	-36.1	-7.2	33.2	8.36e-02	5.99e-02	-0.2
1522	ok	0.24	9.60e-02	2.37e-02	5.7	5.7	2.5	2.5	-38.2	-7.0	29.1	0.2	3.26e-02	-0.3
1523	ok	0.24	8.37e-02	2.32e-02	5.7	5.7	2.5	2.5	-35.6	-7.0	26.8	3.01e-02	2.48e-03	-0.3
1524	ok	0.24	9.33e-02	2.33e-02	5.7	5.7	2.5	2.5	-38.1	-7.1	30.9	6.68e-02	-3.28e-02	-0.3
1525	ok	0.24	8.09e-02	2.30e-02	5.7	5.7	2.5	2.5	-36.1	-6.9	25.9	2.56e-02	7.47e-03	-0.3
1526	ok	0.24	9.09e-02	2.32e-02	5.7	5.7	2.5	2.5	-38.6	-7.4	30.1	6.43e-02	-3.27e-02	-0.3
1527	ok	0.24	7.93e-02	2.35e-02	5.7	5.7	2.5	2.5	-47.5	-7.8	23.2	5.91e-03	3.87e-02	4.54e-02
1528	ok	0.24	0.1	2.41e-02	5.7	5.7	2.5	2.5	-48.4	-7.9	24.0	4.51e-02	-1.73e-02	1.19e-02
1529	ok	0.24	0.1	2.56e-02	5.7	5.7	2.5	2.5	-44.0	-5.3	26.5	-0.2	-5.16e-03	0.2
1530	ok	0.24	0.1	2.81e-02	5.7	5.7	2.5	2.5	-47.5	-4.7	22.1	-0.2	-8.87e-02	0.1
1531	ok	0.24	8.17e-02	3.16e-02	5.7	5.7	2.5	2.5	-78.6	-8.3	-6.8	-9.74e-02	1.68e-03	-0.2
1683	ok	0.24	7.86e-02	2.78e-02	5.7	5.7	2.5	2.5	-59.5	-3.0	-17.8	9.16e-02	9.79e-02	-0.2
1684	ok	0.24	0.1	2.44e-02	5.7	5.7	2.5	2.5	-50.7	-4.6	-22.1	2.96e-02	-4.23e-02	-0.2
1685	ok	0.24	0.1	2.28e-02	5.7	5.7	2.5	2.5	-43.2	-4.9	-25.8	-3.22e-02	2.17e-02	-0.2
1686	ok	0.24	0.1	2.16e-02	5.7	5.7	2.5	2.5	-43.6	-6.7	-21.6	-8.28e-02	-5.13e-02	-9.22e-03
1687	ok	0.24	8.20e-02	2.26e-02	5.7	5.7	2.5	2.5	-43.9	-6.9	-24.2	-1.15e-02	5.02e-02	1.37e-02
1688	ok	0.24	9.02e-02	2.10e-02	5.7	5.7	2.5	2.5	-42.2	-6.4	-21.1	-9.34e-02	-7.99e-02	-1.20e-02
1689	ok	0.24	8.58e-02	2.19e-02	5.7	5.7	2.5	2.5	-43.5	-6.5	-22.6	-1.59e-02	4.01e-02	1.06e-02
1690	ok	0.24	9.25e-02	2.07e-02	5.7	5.7	2.5	2.5	-42.1	-6.2	-20.4	-9.38e-02	-7.94e-02	-1.33e-02
1691	ok	0.24	8.94e-02	2.18e-02	5.7	5.7	2.5	2.5	-43.5	-6.3	-22.1	-2.08e-02	3.43e-02	8.19e-03
1692	ok	0.24	9.51e-02	2.07e-02	5.7	5.7	2.5	2.5	-42.1	-6.1	-20.1	-0.1	-8.52e-02	-1.76e-02
1693	ok	0.24	9.29e-02	2.18e-02	5.7	5.7	2.5	2.5	-43.8	-6.3	-22.0	-2.54e-02	4.63e-02	6.72e-03
1694	ok	0.24	9.85e-02	2.05e-02	5.7	5.7	2.5	2.5	-42.0	-6.1	-18.4	-0.1	-7.64e-02	-1.46e-02
1695	ok	0.24	9.63e-02	2.11e-02	5.7	5.7	2.5	2.5	-28.7	-5.8	-26.8	4.52e-02	2.73e-02	0.3

1696	ok	0.24	0.1	2.06e-02	5.7	5.7	2.5	2.5	-29.0	-5.4	-30.2	3.71e-02	-6.08e-02	0.3
1697	ok	0.24	9.92e-02	2.11e-02	5.7	5.7	2.5	2.5	-28.3	-5.8	-27.6	4.80e-02	3.05e-02	0.3
1698	ok	0.24	0.1	2.08e-02	5.7	5.7	2.5	2.5	-28.7	-5.3	-31.0	3.86e-02	-5.87e-02	0.3
1699	ok	0.24	0.1	2.13e-02	5.7	5.7	2.5	2.5	-28.0	-5.7	-28.4	4.92e-02	3.45e-02	0.3
1700	ok	0.24	0.1	2.10e-02	5.7	5.7	2.5	2.5	-28.5	-5.3	-31.8	3.76e-02	-6.14e-02	0.3
1701	ok	0.24	0.1	2.15e-02	5.7	5.7	2.5	2.5	-27.8	-5.8	-29.0	4.67e-02	3.31e-02	0.3
1702	ok	0.24	0.1	2.12e-02	5.7	5.7	2.5	2.5	-29.6	-5.7	-31.9	-1.07e-02	-7.36e-02	0.3
1703	ok	0.24	0.1	2.17e-02	5.7	5.7	2.5	2.5	-27.8	-5.9	-29.3	4.09e-02	2.45e-02	0.3
1704	ok	0.24	0.1	2.14e-02	5.7	5.7	2.5	2.5	-28.3	-5.5	-32.7	2.87e-02	-6.47e-02	0.3
1705	ok	0.24	0.1	2.18e-02	5.7	5.7	2.5	2.5	-44.1	-6.9	-20.4	-3.14e-02	4.11e-02	-7.59e-03
1706	ok	0.24	0.1	2.10e-02	5.7	5.7	2.5	2.5	-42.3	-6.8	16.4	-0.1	-7.68e-02	4.42e-02
1707	ok	0.24	0.1	2.14e-02	5.7	5.7	2.5	2.5	-43.9	-7.1	19.2	-3.32e-02	3.69e-02	2.39e-02
1708	ok	0.24	0.1	2.07e-02	5.7	5.7	2.5	2.5	-41.9	-7.0	17.2	-0.1	-7.03e-02	4.16e-02
1709	ok	0.24	0.1	2.11e-02	5.7	5.7	2.5	2.5	-43.0	-7.4	18.9	-2.82e-02	3.98e-02	2.39e-02
1710	ok	0.24	0.1	2.08e-02	5.7	5.7	2.5	2.5	-42.0	-7.0	16.8	-0.1	-6.84e-02	4.07e-02
1711	ok	0.24	0.1	2.11e-02	5.7	5.7	2.5	2.5	-43.4	-7.2	18.4	-2.72e-02	3.74e-02	2.14e-02
1712	ok	0.24	0.1	2.09e-02	5.7	5.7	2.5	2.5	-28.9	-5.4	31.8	-1.72e-02	-2.99e-02	-0.3
1713	ok	0.24	0.1	2.14e-02	5.7	5.7	2.5	2.5	-44.0	-7.1	18.6	-2.31e-02	3.82e-02	1.77e-02
1714	ok	0.24	0.1	2.11e-02	5.7	5.7	2.5	2.5	-29.2	-5.6	32.0	-1.85e-02	-3.12e-02	-0.3
1715	ok	0.24	0.1	2.17e-02	5.7	5.7	2.5	2.5	-44.1	-7.1	19.2	-2.71e-02	3.05e-02	1.52e-02
1716	ok	0.24	0.1	2.13e-02	5.7	5.7	2.5	2.5	-29.5	-5.6	32.3	-2.58e-02	-3.66e-02	-0.3
1717	ok	0.24	0.1	2.22e-02	5.7	5.7	2.5	2.5	-44.2	-6.9	21.4	-3.09e-02	4.30e-02	1.61e-02
1718	ok	0.24	0.1	2.17e-02	5.7	5.7	2.5	2.5	-28.4	-5.6	33.5	2.94e-02	-1.89e-02	-0.3
1719	ok	0.24	0.1	2.19e-02	5.7	5.7	2.5	2.5	-43.4	-7.0	21.1	-2.65e-02	3.78e-02	1.51e-02
1720	ok	0.24	0.1	2.15e-02	5.7	5.7	2.5	2.5	-28.3	-5.6	32.9	3.42e-02	-6.18e-02	-0.3
1721	ok	0.24	0.1	2.16e-02	5.7	5.7	2.5	2.5	-43.1	-7.2	20.6	-2.00e-02	4.09e-02	9.81e-03
1722	ok	0.24	0.1	2.11e-02	5.7	5.7	2.5	2.5	-28.5	-5.4	32.1	3.78e-02	-6.05e-02	-0.3
1723	ok	0.24	0.1	2.13e-02	5.7	5.7	2.5	2.5	-43.0	-7.0	20.3	-1.74e-02	4.40e-02	1.06e-02
1724	ok	0.24	0.1	2.08e-02	5.7	5.7	2.5	2.5	-28.7	-5.4	31.1	3.86e-02	-5.76e-02	-0.3
1725	ok	0.24	9.80e-02	2.10e-02	5.7	5.7	2.5	2.5	-43.1	-6.9	20.1	-1.81e-02	4.37e-02	5.24e-03
1726	ok	0.24	9.98e-02	2.06e-02	5.7	5.7	2.5	2.5	-29.0	-5.4	30.2	3.70e-02	-5.96e-02	-0.3
1727	ok	0.24	9.48e-02	2.11e-02	5.7	5.7	2.5	2.5	-43.3	-6.7	20.1	-2.35e-02	3.39e-02	1.41e-03
1728	ok	0.24	9.79e-02	2.05e-02	5.7	5.7	2.5	2.5	-42.1	-6.1	18.4	-0.1	-7.61e-02	2.09e-02
1729	ok	0.24	9.19e-02	2.19e-02	5.7	5.7	2.5	2.5	-44.0	-6.3	22.1	-2.48e-02	4.89e-02	1.15e-03
1730	ok	0.24	9.46e-02	2.08e-02	5.7	5.7	2.5	2.5	-42.2	-6.1	20.4	-0.1	-8.42e-02	2.60e-02
1731	ok	0.24	8.83e-02	2.17e-02	5.7	5.7	2.5	2.5	-43.4	-6.4	22.1	-2.23e-02	3.34e-02	-3.75e-06
1732	ok	0.24	9.17e-02	2.08e-02	5.7	5.7	2.5	2.5	-42.1	-6.2	20.5	-9.39e-02	-7.84e-02	2.07e-02
1733	ok	0.24	8.46e-02	2.19e-02	5.7	5.7	2.5	2.5	-43.4	-6.5	22.5	-1.71e-02	3.96e-02	-2.80e-03
1734	ok	0.24	8.95e-02	2.10e-02	5.7	5.7	2.5	2.5	-42.2	-6.4	21.1	-9.34e-02	-7.88e-02	1.91e-02
1735	ok	0.24	8.09e-02	2.25e-02	5.7	5.7	2.5	2.5	-43.7	-6.9	24.1	-1.26e-02	4.97e-02	-6.04e-03
1736	ok	0.24	0.1	2.16e-02	5.7	5.7	2.5	2.5	-40.5	-5.5	23.2	-0.1	-6.79e-02	0.2
1737	ok	0.24	0.1	2.27e-02	5.7	5.7	2.5	2.5	-43.0	-5.0	25.7	-3.33e-02	2.07e-02	0.2
1738	ok	0.24	0.1	2.44e-02	5.7	5.7	2.5	2.5	-50.6	-4.6	22.1	3.00e-02	-4.19e-02	0.2
1739	ok	0.24	7.86e-02	2.78e-02	5.7	5.7	2.5	2.5	-59.4	-3.0	18.0	9.15e-02	9.77e-02	0.2
1891	ok	0.24	8.39e-02	2.36e-02	5.7	5.7	2.5	2.5	-51.7	-1.9	-16.9	3.39e-02	5.57e-02	-0.2
1892	ok	0.24	8.92e-02	2.33e-02	5.7	5.7	2.5	2.5	-49.0	-4.6	-21.1	5.53e-02	-4.31e-02	-0.2
1893	ok	0.24	0.1	2.17e-02	5.7	5.7	2.5	2.5	-40.9	-5.8	-24.4	3.22e-02	3.81e-02	-0.2
1894	ok	0.24	0.1	2.11e-02	5.7	5.7	2.5	2.5	-41.8	-6.4	-21.9	6.91e-02	-1.38e-02	-5.70e-03
1895	ok	0.24	0.1	2.16e-02	5.7	5.7	2.5	2.5	-40.4	-7.3	-24.2	4.74e-02	6.18e-02	3.65e-04
1896	ok	0.24	9.62e-02	2.03e-02	5.7	5.7	2.5	2.5	-40.1	-6.2	-21.1	6.26e-02	-1.55e-02	-1.45e-02
1897	ok	0.24	8.71e-02	2.09e-02	5.7	5.7	2.5	2.5	-39.8	-7.2	-22.6	4.53e-02	5.10e-02	-2.93e-03
1898	ok	0.24	9.77e-02	2.00e-02	5.7	5.7	2.5	2.5	-39.8	-5.9	-20.4	6.25e-02	-1.60e-02	-1.66e-02
1899	ok	0.24	8.90e-02	2.07e-02	5.7	5.7	2.5	2.5	-39.7	-7.4	-22.2	4.25e-02	4.14e-02	-6.17e-03
1900	ok	0.24	9.97e-02	1.99e-02	5.7	5.7	2.5	2.5	-39.9	-6.0	-20.1	6.67e-02	-1.67e-02	-1.87e-02
1901	ok	0.24	9.20e-02	2.07e-02	5.7	5.7	2.5	2.5	-39.9	-7.4	-22.1	5.01e-02	6.01e-02	-6.48e-03
1902	ok	0.24	0.1	1.97e-02	5.7	5.7	2.5	2.5	-39.9	-6.9	-17.5	7.38e-02	-1.04e-02	-1.15e-02
1903	ok	0.24	9.57e-02	2.02e-02	5.7	5.7	2.5	2.5	-39.5	-7.7	-20.2	4.15e-02	3.48e-02	-7.98e-03
1904	ok	0.24	0.1	1.98e-02	5.7	5.7	2.5	2.5	-39.6	-7.2	-17.5	7.07e-02	-9.89e-03	-1.34e-02
1905	ok	0.24	9.86e-02	2.04e-02	5.7	5.7	2.5	2.5	-39.4	-8.0	-20.1	4.42e-02	4.42e-02	-1.19e-02
1906	ok	0.24	0.1	2.00e-02	5.7	5.7	2.5	2.5	-39.6	-7.3	-17.5	7.16e-02	-8.86e-03	-1.53e-02
1907	ok	0.24	0.1	2.06e-02	5.7	5.7	2.5	2.5	-39.4	-8.2	-20.1	4.45e-02	4.46e-02	-1.41e-02
1908	ok	0.24	0.1	2.03e-02	5.7	5.7	2.5	2.5	-39.6	-7.5	-17.7	7.15e-02	-6.38e-03	-1.73e-02
1909	ok	0.24	0.1	2.10e-02	5.7	5.7	2.5	2.5	-39.5	-8.4	-20.3	4.24e-02	3.94e-02	-1.60e-02
1910	ok	0.24	0.1	2.05e-02	5.7	5.7	2.5	2.5	-39.7	-7.7	-17.9	7.02e-02	-4.22e-03	-1.91e-02
1911	ok	0.24	0.1	2.13e-02	5.7	5.7	2.5	2.5	-39.6	-8.5	-20.6	3.99e-02	3.35e-02	-1.85e-02
1912	ok	0.24	0.1	2.07e-02	5.7	5.7	2.5	2.5	-40.0	-7.5	-17.8	7.50e-02	3.47e-03	-2.20e-02
1913	ok	0.24	0.1	2.15e-02	5.7	5.7	2.5	2.5	-40.0	-8.3	-20.6	4.70e-02	5.01e-02	-2.18e-02
1914	ok	0.24	0.1	2.04e-02	5.7	5.7	2.5	2.5	-26.0	-6.0	-29.6	6.31e-02	3.03e-02	0.3
1915	ok	0.24	0.1	2.11e-02	5.7	5.7	2.5	2.5	-24.6	-6.8	-31.9	7.29e-02	7.41e-02	0.3
1916	ok	0.24	0.1	2.03e-02	5.7	5.7	2.5	2.5	-24.6	-3.8	31.1	4.41e-02	-6.09e-02	-0.3
1917	ok	0.24	0.1	2.08e-02	5.7	5.7	2.5	2.5	-22.7	-4.7	-28.5	5.55e-02	-8.21e-03	0.3
1918	ok	0.24	0.1	2.02e-02	5.7	5.7	2.5	2.5	-24.8	-3.6	30.7	4.07e-02	-6.13e-02	-0.3
1919	ok	0.24	0.1	2.10e-02	5.7	5.7	2.5	2.5	-24.0	-4.4	29.1	5.81e-02	-7.65e-03	-0.3
1920	ok	0.24	0.1	2.03e-02	5.7	5.7	2.5	2.5	-40.4	-7.6	16.2	6.29e-02	-1.20e-02	3.13e-02
1921	ok	0.24	0.1	2.12e-02	5.7	5.7	2.5	2.5	-40.4	-8.3	18.9	3.63e-02	3.80e-02	3.44e-02
1922	ok	0.24	0.1	2.06e-02	5.7	5.7	2.5	2.5	-25.8	-3.8	31.1	3.70e-02	-5.81e-02	-0.3
1923	ok	0.24	0.1	2.14e-02	5.7	5.7	2.5	2.5	-24.8	-6.8	32.6	7.44e-02	7.51e-02	-0.3
1924	ok	0.24	0.1	2.07e-02	5.7	5.7	2.5	2.5	-26.0	-3.7	31.3	4.26e-02	-5.14e-02	-0.3
1925	ok	0.24	0.1	2.18e-02	5.7	5.7	2.5	2.5	-24.8	-4.4	29.0	5.24e-02	-9.27e-03	-0.3

1926	ok	0.24	0.1	2.11e-02	5.7	5.7	2.5	2.5	-40.0	-7.5	18.9	7.41e-02	4.12e-03	3.09e-02
1927	ok	0.24	0.1	2.15e-02	5.7	5.7	2.5	2.5	-39.5	-8.7	21.2	3.84e-02	3.20e-02	2.68e-02
1928	ok	0.24	0.1	2.08e-02	5.7	5.7	2.5	2.5	-39.7	-7.8	18.6	6.71e-02	-4.27e-03	2.71e-02
1929	ok	0.24	0.1	2.11e-02	5.7	5.7	2.5	2.5	-39.3	-8.5	20.7	4.07e-02	3.77e-02	2.41e-02
1930	ok	0.24	0.1	2.04e-02	5.7	5.7	2.5	2.5	-39.6	-7.6	18.2	6.83e-02	-6.66e-03	2.49e-02
1931	ok	0.24	0.1	2.07e-02	5.7	5.7	2.5	2.5	-39.3	-8.3	20.3	4.25e-02	4.24e-02	2.21e-02
1932	ok	0.24	0.1	2.01e-02	5.7	5.7	2.5	2.5	-39.6	-7.5	17.9	6.84e-02	-9.29e-03	2.26e-02
1933	ok	0.24	9.87e-02	2.03e-02	5.7	5.7	2.5	2.5	-39.3	-8.1	20.1	4.22e-02	4.18e-02	1.97e-02
1934	ok	0.24	0.1	1.99e-02	5.7	5.7	2.5	2.5	-39.7	-7.3	17.6	6.73e-02	-1.05e-02	2.03e-02
1935	ok	0.24	9.53e-02	2.01e-02	5.7	5.7	2.5	2.5	-39.4	-7.8	20.0	3.91e-02	3.07e-02	1.57e-02
1936	ok	0.24	0.1	1.97e-02	5.7	5.7	2.5	2.5	-40.0	-6.9	17.4	7.20e-02	-1.08e-02	1.78e-02
1937	ok	0.24	9.08e-02	2.08e-02	5.7	5.7	2.5	2.5	-40.1	-7.4	22.2	4.99e-02	6.16e-02	1.46e-02
1938	ok	0.24	9.94e-02	2.01e-02	5.7	5.7	2.5	2.5	-40.0	-6.0	20.4	6.49e-02	-1.70e-02	2.68e-02
1939	ok	0.24	8.90e-02	2.07e-02	5.7	5.7	2.5	2.5	-39.6	-7.5	22.2	4.05e-02	3.90e-02	1.40e-02
1940	ok	0.24	9.69e-02	2.00e-02	5.7	5.7	2.5	2.5	-39.9	-5.9	20.4	5.94e-02	-1.63e-02	2.42e-02
1941	ok	0.24	8.68e-02	2.08e-02	5.7	5.7	2.5	2.5	-39.8	-7.3	22.5	4.33e-02	4.88e-02	1.06e-02
1942	ok	0.24	9.55e-02	2.04e-02	5.7	5.7	2.5	2.5	-40.2	-6.2	21.2	5.96e-02	-1.56e-02	2.18e-02
1943	ok	0.24	9.98e-02	2.15e-02	5.7	5.7	2.5	2.5	-35.6	-6.5	23.8	7.91e-02	3.96e-02	0.2
1944	ok	0.24	0.1	2.12e-02	5.7	5.7	2.5	2.5	-41.9	-6.4	21.9	6.58e-02	-1.42e-02	1.22e-02
1945	ok	0.24	0.1	2.16e-02	5.7	5.7	2.5	2.5	-40.8	-5.5	24.3	3.04e-02	3.44e-02	0.2
1946	ok	0.24	8.88e-02	2.33e-02	5.7	5.7	2.5	2.5	-46.2	-3.8	21.0	-4.10e-02	-6.03e-02	0.2
1947	ok	0.24	8.38e-02	2.36e-02	5.7	5.7	2.5	2.5	-51.7	-1.9	16.9	3.39e-02	5.77e-02	0.2
2239	ok	0.24	8.48e-02	2.07e-02	5.7	5.7	2.5	2.5	-47.0	-4.5	-13.6	-0.2	1.54e-02	-0.1
2240	ok	0.24	9.45e-02	2.15e-02	5.7	5.7	2.5	2.5	-37.1	-4.2	-19.7	-0.2	-8.41e-02	-0.2
2241	ok	0.24	9.07e-02	2.12e-02	5.7	5.7	2.5	2.5	-36.3	-3.7	-23.5	-0.2	-3.24e-03	-0.2
2242	ok	0.24	0.1	1.99e-02	5.7	5.7	2.5	2.5	-32.1	-5.3	-20.5	-0.2	-8.91e-02	-0.2
2243	ok	0.24	9.93e-02	1.99e-02	5.7	5.7	2.5	2.5	-32.0	-4.8	-23.5	-0.2	-4.64e-04	-0.2
2244	ok	0.24	9.76e-02	1.96e-02	5.7	5.7	2.5	2.5	-29.2	-5.9	-19.2	-0.2	-8.49e-02	-0.2
2245	ok	0.24	9.41e-02	1.97e-02	5.7	5.7	2.5	2.5	-31.5	-5.6	-22.2	-0.1	-8.10e-03	-0.2
2246	ok	0.24	0.1	1.93e-02	5.7	5.7	2.5	2.5	-30.4	-5.7	-20.4	-0.2	-8.02e-02	-3.66e-03
2247	ok	0.24	8.83e-02	1.95e-02	5.7	5.7	2.5	2.5	-36.4	-6.9	-21.8	4.64e-02	4.44e-02	-3.73e-02
2248	ok	0.24	0.1	1.93e-02	5.7	5.7	2.5	2.5	-30.2	-5.7	-19.9	-0.2	-8.28e-02	-5.32e-03
2249	ok	0.24	9.12e-02	1.95e-02	5.7	5.7	2.5	2.5	-36.6	-6.7	-21.8	5.19e-02	4.89e-02	-3.94e-02
2250	ok	0.24	0.1	1.90e-02	5.7	5.7	2.5	2.5	-30.0	-5.8	-17.8	-0.2	-7.45e-02	-9.05e-03
2251	ok	0.24	9.41e-02	1.88e-02	5.7	5.7	2.5	2.5	-36.1	-7.3	-19.9	4.84e-02	3.00e-02	-4.11e-02
2252	ok	0.24	0.1	1.92e-02	5.7	5.7	2.5	2.5	-30.0	-6.3	-17.6	-0.2	-7.26e-02	-1.28e-02
2253	ok	0.24	9.71e-02	1.90e-02	5.7	5.7	2.5	2.5	-36.1	-7.4	-19.9	4.20e-02	3.65e-02	-3.95e-02
2254	ok	0.24	0.1	1.94e-02	5.7	5.7	2.5	2.5	-30.0	-6.5	-17.6	-0.2	-7.56e-02	-1.47e-02
2255	ok	0.24	9.91e-02	1.92e-02	5.7	5.7	2.5	2.5	-36.2	-7.6	-19.9	4.55e-02	3.69e-02	-4.06e-02
2256	ok	0.24	0.1	1.97e-02	5.7	5.7	2.5	2.5	-30.0	-6.8	-17.7	-0.2	-7.89e-02	-1.65e-02
2257	ok	0.24	0.1	1.96e-02	5.7	5.7	2.5	2.5	-36.2	-7.8	-20.1	4.66e-02	4.10e-02	-4.18e-02
2258	ok	0.24	0.1	1.99e-02	5.7	5.7	2.5	2.5	-30.1	-7.0	-17.8	-0.2	-8.01e-02	-1.86e-02
2259	ok	0.24	0.1	1.99e-02	5.7	5.7	2.5	2.5	-36.1	-8.1	-20.4	4.92e-02	3.34e-02	-4.25e-02
2260	ok	0.24	0.1	2.02e-02	5.7	5.7	2.5	2.5	-30.1	-6.9	-17.7	-0.2	-8.32e-02	-2.30e-02
2261	ok	0.24	0.1	2.02e-02	5.7	5.7	2.5	2.5	-21.0	-5.5	28.6	-6.82e-02	4.24e-02	-0.2
2262	ok	0.24	0.1	1.99e-02	5.7	5.7	2.5	2.5	-19.6	-5.9	24.6	-0.1	-2.78e-02	-0.3
2263	ok	0.24	0.1	2.01e-02	5.7	5.7	2.5	2.5	-36.5	-7.8	19.6	4.48e-02	3.51e-02	6.08e-02
2264	ok	0.24	0.1	2.02e-02	5.7	5.7	2.5	2.5	-20.1	-6.1	29.1	-0.1	-7.54e-02	-0.3
2265	ok	0.24	9.99e-02	1.95e-02	5.7	5.7	2.5	2.5	-20.3	-5.2	-25.0	-2.29e-02	-1.28e-02	0.3
2266	ok	0.24	0.1	2.00e-02	5.7	5.7	2.5	2.5	-20.8	-5.0	-28.5	-0.1	-6.86e-02	0.3
2267	ok	0.24	0.1	2.00e-02	5.7	5.7	2.5	2.5	-24.2	-6.0	28.4	-3.72e-03	-6.29e-03	-0.3
2268	ok	0.24	0.1	2.01e-02	5.7	5.7	2.5	2.5	-30.9	-7.1	-13.4	-0.2	-6.09e-02	-3.16e-02
2269	ok	0.24	0.1	2.02e-02	5.7	5.7	2.5	2.5	-37.3	-7.9	19.1	-6.87e-03	3.26e-02	5.66e-02
2270	ok	0.24	0.1	2.02e-02	5.7	5.7	2.5	2.5	-25.3	-5.9	32.0	4.56e-02	-4.38e-02	-0.3
2271	ok	0.24	0.1	2.02e-02	5.7	5.7	2.5	2.5	-24.2	-5.5	28.2	2.18e-02	-9.92e-04	-0.3
2272	ok	0.24	0.1	2.02e-02	5.7	5.7	2.5	2.5	-25.5	-5.5	32.2	6.17e-02	-3.68e-02	-0.3
2273	ok	0.24	0.1	2.06e-02	5.7	5.7	2.5	2.5	-24.3	-5.0	28.2	2.79e-02	1.73e-03	-0.3
2274	ok	0.24	0.1	2.06e-02	5.7	5.7	2.5	2.5	-30.4	-7.0	18.7	-0.2	-7.88e-02	3.35e-02
2275	ok	0.24	0.1	2.01e-02	5.7	5.7	2.5	2.5	-35.9	-8.2	21.0	4.26e-02	2.94e-02	4.98e-02
2276	ok	0.24	0.1	2.02e-02	5.7	5.7	2.5	2.5	-30.4	-7.1	18.5	-0.2	-7.15e-02	3.07e-02
2277	ok	0.24	0.1	1.96e-02	5.7	5.7	2.5	2.5	-36.0	-8.0	20.4	3.88e-02	3.69e-02	4.85e-02
2278	ok	0.24	0.1	1.99e-02	5.7	5.7	2.5	2.5	-30.4	-6.9	18.2	-0.2	-7.01e-02	2.84e-02
2279	ok	0.24	9.95e-02	1.92e-02	5.7	5.7	2.5	2.5	-36.1	-7.8	20.0	3.73e-02	3.17e-02	4.69e-02
2280	ok	0.24	0.1	1.96e-02	5.7	5.7	2.5	2.5	-30.4	-6.6	17.9	-0.2	-6.77e-02	2.33e-02
2281	ok	0.24	9.74e-02	1.89e-02	5.7	5.7	2.5	2.5	-36.0	-7.6	19.8	3.38e-02	3.11e-02	4.55e-02
2282	ok	0.24	0.1	1.93e-02	5.7	5.7	2.5	2.5	-37.1	-7.7	18.5	5.41e-02	-1.76e-02	2.34e-02
2283	ok	0.24	9.40e-02	1.87e-02	5.7	5.7	2.5	2.5	-36.0	-7.4	19.7	4.05e-02	2.34e-02	4.68e-02
2284	ok	0.24	0.1	1.90e-02	5.7	5.7	2.5	2.5	-30.3	-5.8	17.8	-0.2	-7.19e-02	1.59e-02
2285	ok	0.24	9.01e-02	1.97e-02	5.7	5.7	2.5	2.5	-37.0	-6.7	22.0	5.16e-02	5.09e-02	4.65e-02
2286	ok	0.24	0.1	1.95e-02	5.7	5.7	2.5	2.5	-30.6	-5.8	20.3	-0.2	-7.88e-02	1.55e-02
2287	ok	0.24	8.86e-02	1.94e-02	5.7	5.7	2.5	2.5	-36.3	-7.1	21.7	3.90e-02	3.12e-02	4.33e-02
2288	ok	0.24	0.1	1.94e-02	5.7	5.7	2.5	2.5	-37.4	-7.1	20.6	4.43e-02	-2.38e-02	1.70e-02
2289	ok	0.24	9.30e-02	1.97e-02	5.7	5.7	2.5	2.5	-31.6	-5.8	22.0	-0.1	-8.82e-03	0.2
2290	ok	0.24	9.82e-02	1.98e-02	5.7	5.7	2.5	2.5	-29.8	-6.0	19.2	-0.2	-7.79e-02	0.2
2291	ok	0.24	9.82e-02	1.99e-02	5.7	5.7	2.5	2.5	-32.1	-4.9	23.4	-0.1	-1.84e-03	0.2
2292	ok	0.24	0.1	2.01e-02	5.7	5.7	2.5	2.5	-32.7	-5.4	20.6	-0.2	-8.21e-02	0.2
2293	ok	0.24	9.03e-02	2.12e-02	5.7	5.7	2.5	2.5	-36.4	-3.9	23.4	-0.1	-5.36e-03	0.2
2294	ok	0.24	9.49e-02	2.15e-02	5.7	5.7	2.5	2.5	-37.5	-4.3	19.8	-0.1	-7.96e-02	0.2
2295	ok	0.24	8.44e-02	2.08e-02	5.7	5.7	2.5	2.5	-47.3	-4.5	13.8	-0.2	1.69e-02	0.2

2447	ok	0.24	8.70e-02	1.88e-02	5.7	5.7	2.5	2.5	-34.4	-2.0	-23.0	0.2	9.51e-02	-0.3
2448	ok	0.24	9.48e-02	1.88e-02	5.7	5.7	2.5	2.5	-27.6	-1.7	-27.4	-1.13e-03	-6.47e-03	-0.3
2449	ok	0.24	9.27e-02	1.92e-02	5.7	5.7	2.5	2.5	-35.3	-5.7	-18.9	-3.89e-02	5.12e-02	-0.2
2450	ok	0.24	9.21e-02	1.80e-02	5.7	5.7	2.5	2.5	-32.5	-5.3	-21.3	-0.1	-6.10e-02	-0.2
2451	ok	0.24	9.69e-02	1.83e-02	5.7	5.7	2.5	2.5	-31.3	-7.1	-17.8	-3.67e-02	5.41e-02	-0.2
2452	ok	0.24	9.09e-02	1.69e-02	5.7	5.7	2.5	2.5	-29.8	-6.7	-19.9	-0.1	-6.12e-02	-0.2
2453	ok	0.24	9.03e-02	1.78e-02	5.7	5.7	2.5	2.5	-30.6	-6.9	-22.0	-4.20e-02	1.62e-02	-0.2
2454	ok	0.24	9.73e-02	1.67e-02	5.7	5.7	2.5	2.5	-30.5	-6.0	-19.4	-8.60e-02	-4.11e-02	-1.11e-02
2455	ok	0.24	8.95e-02	1.77e-02	5.7	5.7	2.5	2.5	-31.5	-6.2	-21.3	-3.73e-02	2.25e-02	7.47e-03
2456	ok	0.24	9.88e-02	1.66e-02	5.7	5.7	2.5	2.5	-30.3	-6.2	-19.1	-9.87e-02	-4.04e-02	-1.54e-02
2457	ok	0.24	9.11e-02	1.77e-02	5.7	5.7	2.5	2.5	-31.5	-6.4	-21.0	-4.31e-02	3.62e-02	5.37e-03
2458	ok	0.24	0.1	1.59e-02	5.7	5.7	2.5	2.5	-30.2	-6.7	-17.0	-0.1	-4.96e-02	-1.17e-02
2459	ok	0.24	9.26e-02	1.69e-02	5.7	5.7	2.5	2.5	-31.3	-6.9	-18.9	-4.01e-02	2.01e-02	4.55e-03
2460	ok	0.24	0.1	1.60e-02	5.7	5.7	2.5	2.5	-30.2	-7.1	-16.9	-8.83e-02	-4.45e-02	-1.63e-02
2461	ok	0.24	9.35e-02	1.69e-02	5.7	5.7	2.5	2.5	-31.3	-7.3	-18.7	-3.49e-02	3.02e-02	9.58e-04
2462	ok	0.24	0.1	1.63e-02	5.7	5.7	2.5	2.5	-30.2	-7.3	-16.9	-8.76e-02	-4.32e-02	-1.78e-02
2463	ok	0.24	9.50e-02	1.69e-02	5.7	5.7	2.5	2.5	-31.3	-7.5	-18.7	-3.41e-02	3.20e-02	-1.42e-03
2464	ok	0.24	0.1	1.66e-02	5.7	5.7	2.5	2.5	-30.2	-7.5	-17.0	-8.77e-02	-4.07e-02	-1.88e-02
2465	ok	0.24	9.64e-02	1.70e-02	5.7	5.7	2.5	2.5	-31.3	-7.8	-18.8	-3.65e-02	2.82e-02	-3.72e-03
2466	ok	0.24	0.1	1.69e-02	5.7	5.7	2.5	2.5	-30.2	-7.7	-17.2	-8.96e-02	-3.90e-02	-2.34e-02
2467	ok	0.24	9.70e-02	1.74e-02	5.7	5.7	2.5	2.5	-17.9	-7.4	26.2	1.82e-02	6.12e-02	-0.3
2468	ok	0.24	0.1	1.72e-02	5.7	5.7	2.5	2.5	-18.1	-7.4	23.8	4.74e-03	-2.44e-03	-0.3
2469	ok	0.24	9.52e-02	1.76e-02	5.7	5.7	2.5	2.5	-18.0	-7.0	28.3	2.30e-02	6.86e-02	-0.3
2470	ok	0.24	0.1	1.69e-02	5.7	5.7	2.5	2.5	-19.9	-7.2	26.6	-3.95e-02	-6.77e-02	-0.3
2471	ok	0.24	9.22e-02	1.77e-02	5.7	5.7	2.5	2.5	-18.2	-6.6	28.9	3.63e-02	5.81e-02	-0.3
2472	ok	0.24	9.60e-02	1.77e-02	5.7	5.7	2.5	2.5	-20.3	-7.1	27.8	3.17e-02	2.68e-02	-0.3
2473	ok	0.24	9.20e-02	1.73e-02	5.7	5.7	2.5	2.5	-16.9	-5.8	26.5	-0.1	-6.61e-02	-0.3
2474	ok	0.24	8.99e-02	1.74e-02	5.7	5.7	2.5	2.5	-22.0	-6.5	-27.0	-2.42e-02	9.71e-03	0.3
2475	ok	0.24	9.52e-02	1.78e-02	5.7	5.7	2.5	2.5	-33.2	-8.0	17.2	-6.00e-02	1.14e-02	2.42e-02
2476	ok	0.24	9.52e-02	1.74e-02	5.7	5.7	2.5	2.5	-20.9	-7.1	27.5	-3.12e-03	-6.18e-02	-0.3
2477	ok	0.24	9.26e-02	1.77e-02	5.7	5.7	2.5	2.5	-18.5	-5.5	-28.5	3.89e-02	6.42e-02	0.3
2478	ok	0.24	9.74e-02	1.72e-02	5.7	5.7	2.5	2.5	-20.6	-5.6	27.6	-2.02e-02	-6.70e-02	-0.3
2479	ok	0.24	9.21e-02	1.76e-02	5.7	5.7	2.5	2.5	-18.2	-6.1	-28.1	4.08e-02	6.02e-02	0.3
2480	ok	0.24	0.1	1.71e-02	5.7	5.7	2.5	2.5	-18.4	-6.8	-25.1	1.04e-02	-2.33e-05	0.3
2481	ok	0.24	9.59e-02	1.79e-02	5.7	5.7	2.5	2.5	-18.1	-6.8	-27.5	2.22e-02	6.73e-02	0.3
2482	ok	0.24	0.1	1.75e-02	5.7	5.7	2.5	2.5	-30.6	-8.1	17.5	-0.1	-7.40e-02	4.13e-02
2483	ok	0.24	9.62e-02	1.75e-02	5.7	5.7	2.5	2.5	-31.7	-8.0	19.3	-4.63e-02	1.35e-02	1.85e-02
2484	ok	0.24	0.1	1.72e-02	5.7	5.7	2.5	2.5	-30.6	-7.8	17.8	-8.53e-02	-3.67e-02	3.25e-02
2485	ok	0.24	9.51e-02	1.71e-02	5.7	5.7	2.5	2.5	-31.7	-7.9	18.9	-4.04e-02	1.90e-02	1.24e-02
2486	ok	0.24	0.1	1.68e-02	5.7	5.7	2.5	2.5	-30.7	-7.7	17.4	-8.41e-02	-3.72e-02	2.72e-02
2487	ok	0.24	9.36e-02	1.70e-02	5.7	5.7	2.5	2.5	-31.7	-7.7	18.7	-3.84e-02	2.26e-02	9.90e-03
2488	ok	0.24	0.1	1.64e-02	5.7	5.7	2.5	2.5	-30.7	-7.5	17.2	-8.44e-02	-3.98e-02	2.56e-02
2489	ok	0.24	9.23e-02	1.69e-02	5.7	5.7	2.5	2.5	-31.6	-7.4	18.5	-3.92e-02	2.09e-02	7.31e-03
2490	ok	0.24	9.92e-02	1.62e-02	5.7	5.7	2.5	2.5	-30.7	-7.3	17.0	-8.54e-02	-4.15e-02	2.38e-02
2491	ok	0.24	9.09e-02	1.69e-02	5.7	5.7	2.5	2.5	-31.7	-7.0	18.6	-4.58e-02	9.77e-03	1.82e-03
2492	ok	0.24	9.94e-02	1.60e-02	5.7	5.7	2.5	2.5	-30.6	-6.8	16.9	-0.1	-4.95e-02	1.61e-02
2493	ok	0.24	9.02e-02	1.79e-02	5.7	5.7	2.5	2.5	-31.9	-6.6	21.3	-4.21e-02	4.20e-02	3.45e-03
2494	ok	0.24	9.86e-02	1.68e-02	5.7	5.7	2.5	2.5	-30.7	-6.3	19.4	-9.79e-02	-3.64e-02	2.57e-02
2495	ok	0.24	8.82e-02	1.78e-02	5.7	5.7	2.5	2.5	-31.9	-6.3	21.0	-4.15e-02	1.46e-02	1.74e-03
2496	ok	0.24	9.69e-02	1.69e-02	5.7	5.7	2.5	2.5	-31.0	-6.2	19.4	-8.30e-02	-3.87e-02	1.95e-02
2497	ok	0.24	8.83e-02	1.78e-02	5.7	5.7	2.5	2.5	-31.1	-6.9	21.6	-4.52e-02	9.20e-03	0.2
2498	ok	0.24	8.98e-02	1.71e-02	5.7	5.7	2.5	2.5	-30.5	-6.8	20.1	-9.86e-02	-5.52e-02	0.2
2499	ok	0.24	9.50e-02	1.83e-02	5.7	5.7	2.5	2.5	-31.9	-7.2	18.3	-4.02e-02	4.69e-02	0.2
2500	ok	0.24	9.18e-02	1.83e-02	5.7	5.7	2.5	2.5	-33.2	-5.7	21.4	-0.1	-5.71e-02	0.2
2501	ok	0.24	9.20e-02	1.93e-02	5.7	5.7	2.5	2.5	-35.8	-5.8	19.4	-4.33e-02	4.48e-02	0.2
2502	ok	0.24	9.46e-02	1.90e-02	5.7	5.7	2.5	2.5	-28.0	-1.7	27.6	-7.18e-03	-5.04e-03	0.3
2503	ok	0.24	8.77e-02	1.90e-02	5.7	5.7	2.5	2.5	-31.0	-1.7	23.3	5.43e-02	9.12e-02	0.3
2655	ok	0.24	8.59e-02	1.68e-02	5.7	5.7	2.5	2.5	-26.6	-0.6	-22.2	-0.1	5.27e-02	-0.3
2656	ok	0.24	9.50e-02	1.79e-02	5.7	5.7	2.5	2.5	-25.0	-1.0	-25.5	-7.08e-02	1.70e-02	-0.3
2657	ok	0.24	8.91e-02	1.76e-02	5.7	5.7	2.5	2.5	-27.1	-4.2	-18.1	5.75e-02	3.98e-02	-0.2
2658	ok	0.24	9.46e-02	1.72e-02	5.7	5.7	2.5	2.5	-27.4	-4.6	-20.1	9.26e-02	2.58e-02	-0.2
2659	ok	0.24	8.56e-02	1.75e-02	5.7	5.7	2.5	2.5	-24.5	-6.1	-17.6	8.69e-02	4.19e-02	-0.2
2660	ok	0.24	9.03e-02	1.63e-02	5.7	5.7	2.5	2.5	-25.1	-6.8	-19.7	9.19e-02	-2.75e-02	-0.2
2661	ok	0.24	9.21e-02	1.69e-02	5.7	5.7	2.5	2.5	-23.2	-7.9	-21.2	8.98e-02	3.61e-02	-0.2
2662	ok	0.24	9.78e-02	1.60e-02	5.7	5.7	2.5	2.5	-28.0	-6.3	-19.4	5.52e-02	-7.40e-03	-8.61e-03
2663	ok	0.24	9.43e-02	1.66e-02	5.7	5.7	2.5	2.5	-27.3	-7.0	-21.3	3.76e-02	3.47e-02	-4.08e-03
2664	ok	0.24	0.1	1.59e-02	5.7	5.7	2.5	2.5	-27.9	-6.5	-19.1	5.70e-02	7.17e-03	-8.59e-03
2665	ok	0.24	9.55e-02	1.65e-02	5.7	5.7	2.5	2.5	-27.1	-7.2	-21.1	5.77e-02	5.38e-02	-4.28e-03
2666	ok	0.24	0.1	1.53e-02	5.7	5.7	2.5	2.5	-27.8	-7.1	-17.0	5.55e-02	-8.74e-03	-9.64e-03
2667	ok	0.24	9.74e-02	1.58e-02	5.7	5.7	2.5	2.5	-27.1	-7.7	-18.9	3.53e-02	2.49e-02	-6.21e-03
2668	ok	0.24	0.1	1.55e-02	5.7	5.7	2.5	2.5	-27.7	-7.6	-16.9	5.32e-02	-9.00e-03	-1.14e-02
2669	ok	0.24	9.85e-02	1.58e-02	5.7	5.7	2.5	2.5	-27.1	-8.1	-18.8	3.79e-02	3.44e-02	-1.03e-02
2670	ok	0.24	0.1	1.57e-02	5.7	5.7	2.5	2.5	-27.7	-7.9	-17.0	5.42e-02	-7.48e-03	-1.34e-02
2671	ok	0.24	9.87e-02	1.61e-02	5.7	5.7	2.5	2.5	-17.2	-9.9	23.4	5.22e-02	6.01e-02	-0.3
2672	ok	0.24	0.1	1.61e-02	5.7	5.7	2.5	2.5	-16.4	-8.7	21.6	3.81e-02	-5.51e-02	-0.3
2673	ok	0.24	9.84e-02	1.65e-02	5.7	5.7	2.5	2.5	-17.4	-9.9	24.8	5.04e-02	6.00e-02	-0.3
2674	ok	0.24	0.1	1.64e-02	5.7	5.7	2.5	2.5	-16.5	-8.6	22.9	3.72e-02	-5.46e-02	-0.3
2675	ok	0.24	9.69e-02	1.69e-02	5.7	5.7	2.5	2.5	-17.7	-9.6	26.0	4.59e-02	4.98e-02	-0.3
2676	ok	0.24	0.1	1.67e-02	5.7	5.7	2.5	2.5	-16.7	-8.2	24.2	4.46e-02	-4.82e-02	-0.3

2677	ok	0.24	9.32e-02	1.73e-02	5.7	5.7	2.5	2.5	-15.8	-9.0	27.0	7.14e-02	6.90e-02	-0.3
2678	ok	0.24	0.1	1.68e-02	5.7	5.7	2.5	2.5	-17.2	-8.6	25.5	6.87e-02	4.46e-02	-0.3
2679	ok	0.24	9.04e-02	1.75e-02	5.7	5.7	2.5	2.5	-15.9	-8.5	27.6	6.51e-02	6.01e-02	-0.3
2680	ok	0.24	9.78e-02	1.73e-02	5.7	5.7	2.5	2.5	-18.4	-8.2	26.1	9.34e-02	5.45e-02	-0.3
2681	ok	0.24	9.04e-02	1.85e-02	5.7	5.7	2.5	2.5	-24.6	-7.6	25.9	0.2	8.44e-02	-0.3
2682	ok	0.24	9.36e-02	1.72e-02	5.7	5.7	2.5	2.5	-17.7	-4.9	26.9	7.94e-02	-3.20e-02	-0.3
2683	ok	0.24	8.72e-02	1.77e-02	5.7	5.7	2.5	2.5	-16.4	-5.5	25.6	9.14e-02	2.89e-02	-0.3
2684	ok	0.24	9.89e-02	1.70e-02	5.7	5.7	2.5	2.5	-17.4	-4.6	-26.1	8.52e-02	-5.77e-02	0.3
2685	ok	0.24	9.22e-02	1.77e-02	5.7	5.7	2.5	2.5	-16.3	-8.2	27.8	9.36e-02	0.1	-0.3
2686	ok	0.24	9.87e-02	1.70e-02	5.7	5.7	2.5	2.5	-16.9	-4.6	-25.8	3.53e-02	-7.68e-02	0.3
2687	ok	0.24	9.07e-02	1.72e-02	5.7	5.7	2.5	2.5	-18.0	-8.0	-27.7	5.41e-02	6.52e-02	0.3
2688	ok	0.24	0.1	1.68e-02	5.7	5.7	2.5	2.5	-17.3	-8.3	-24.6	7.37e-02	4.56e-02	0.3
2689	ok	0.24	9.45e-02	1.75e-02	5.7	5.7	2.5	2.5	-15.9	-8.7	-26.1	7.07e-02	6.22e-02	0.3
2690	ok	0.24	0.1	1.71e-02	5.7	5.7	2.5	2.5	-28.1	-8.5	18.4	4.97e-02	8.36e-03	2.78e-02
2691	ok	0.24	9.82e-02	1.72e-02	5.7	5.7	2.5	2.5	-27.9	-9.1	19.9	1.90e-02	1.67e-02	3.19e-02
2692	ok	0.24	0.1	1.68e-02	5.7	5.7	2.5	2.5	-28.1	-8.7	18.0	2.67e-02	-1.06e-02	3.04e-02
2693	ok	0.24	9.85e-02	1.67e-02	5.7	5.7	2.5	2.5	-28.1	-8.9	19.4	1.94e-02	2.36e-02	2.86e-02
2694	ok	0.24	0.1	1.64e-02	5.7	5.7	2.5	2.5	-28.2	-8.5	17.6	2.75e-02	-1.07e-02	2.82e-02
2695	ok	0.24	9.84e-02	1.63e-02	5.7	5.7	2.5	2.5	-28.1	-8.6	19.0	2.09e-02	2.91e-02	2.31e-02
2696	ok	0.24	0.1	1.60e-02	5.7	5.7	2.5	2.5	-28.3	-8.2	17.3	2.76e-02	-1.26e-02	2.28e-02
2697	ok	0.24	9.76e-02	1.61e-02	5.7	5.7	2.5	2.5	-28.1	-8.3	18.9	2.08e-02	2.86e-02	2.05e-02
2698	ok	0.24	0.1	1.57e-02	5.7	5.7	2.5	2.5	-28.2	-7.9	17.1	2.73e-02	-1.37e-02	2.06e-02
2699	ok	0.24	9.63e-02	1.59e-02	5.7	5.7	2.5	2.5	-27.9	-7.6	18.8	1.95e-02	1.60e-02	1.55e-02
2700	ok	0.24	0.1	1.54e-02	5.7	5.7	2.5	2.5	-28.2	-7.2	16.9	5.71e-02	-1.30e-02	1.93e-02
2701	ok	0.24	9.38e-02	1.68e-02	5.7	5.7	2.5	2.5	-27.5	-7.4	21.4	5.71e-02	5.36e-02	1.30e-02
2702	ok	0.24	0.1	1.62e-02	5.7	5.7	2.5	2.5	-28.4	-6.7	19.5	5.16e-02	6.22e-03	1.51e-02
2703	ok	0.24	9.39e-02	1.69e-02	5.7	5.7	2.5	2.5	-28.2	-7.2	21.2	2.23e-02	3.00e-02	1.49e-02
2704	ok	0.24	9.62e-02	1.62e-02	5.7	5.7	2.5	2.5	-28.6	-6.6	19.4	2.77e-02	-1.48e-02	1.74e-02
2705	ok	0.24	9.07e-02	1.72e-02	5.7	5.7	2.5	2.5	-28.1	-8.5	21.7	1.01e-02	7.89e-03	0.2
2706	ok	0.24	8.96e-02	1.66e-02	5.7	5.7	2.5	2.5	-25.4	-7.0	19.9	3.45e-02	-4.57e-02	0.2
2707	ok	0.24	8.40e-02	1.79e-02	5.7	5.7	2.5	2.5	-29.5	-6.9	17.8	1.50e-02	3.62e-02	0.2
2708	ok	0.24	9.40e-02	1.75e-02	5.7	5.7	2.5	2.5	-27.7	-5.6	20.7	2.73e-02	-4.87e-02	0.2
2709	ok	0.24	8.90e-02	1.80e-02	5.7	5.7	2.5	2.5	-31.8	-5.0	18.6	1.43e-02	3.89e-02	0.2
2710	ok	0.24	9.45e-02	1.81e-02	5.7	5.7	2.5	2.5	-25.3	-1.2	25.6	-5.31e-02	1.00e-02	0.3
2711	ok	0.24	8.69e-02	1.70e-02	5.7	5.7	2.5	2.5	-26.7	-0.6	22.4	-0.1	6.20e-02	0.3
3003	ok	0.24	8.71e-02	1.54e-02	5.7	5.7	2.5	2.5	-25.4	-2.5	-20.0	-0.2	3.59e-02	-0.3
3004	ok	0.24	9.16e-02	1.69e-02	5.7	5.7	2.5	2.5	-19.2	-3.5	-21.9	-0.2	-5.98e-02	-0.3
3005	ok	0.24	8.58e-02	1.60e-02	5.7	5.7	2.5	2.5	-17.6	-2.8	-25.2	-7.72e-02	-7.46e-04	-0.3
3006	ok	0.24	9.06e-02	1.66e-02	5.7	5.7	2.5	2.5	-15.1	-4.7	-26.7	-0.1	-1.14e-02	-0.3
3007	ok	0.24	8.37e-02	1.61e-02	5.7	5.7	2.5	2.5	-15.5	-7.1	-22.0	-4.66e-02	4.23e-02	-0.3
3008	ok	0.24	8.32e-02	1.64e-02	5.7	5.7	2.5	2.5	-13.0	-8.4	-22.9	-0.1	-8.01e-02	-0.3
3009	ok	0.24	8.91e-02	1.57e-02	5.7	5.7	2.5	2.5	-13.0	-8.3	-25.8	-6.25e-02	-2.06e-02	-0.3
3010	ok	0.24	9.93e-02	1.53e-02	5.7	5.7	2.5	2.5	-11.7	-10.3	-22.6	-0.1	-7.78e-02	-0.3
3011	ok	0.24	9.29e-02	1.54e-02	5.7	5.7	2.5	2.5	-12.9	-10.3	-25.3	-5.10e-02	-2.89e-02	-0.3
3012	ok	0.24	0.1	1.54e-02	5.7	5.7	2.5	2.5	-11.6	-11.3	-22.0	-0.1	-7.36e-02	-0.3
3013	ok	0.24	9.42e-02	1.55e-02	5.7	5.7	2.5	2.5	-12.8	-11.2	-24.9	-5.70e-02	-2.20e-02	-0.3
3014	ok	0.24	0.1	1.48e-02	5.7	5.7	2.5	2.5	-11.7	-10.3	15.0	-7.33e-02	-3.44e-03	-0.2
3015	ok	0.24	9.49e-02	1.45e-02	5.7	5.7	2.5	2.5	-14.8	-11.0	21.1	4.13e-02	3.86e-02	-0.2
3016	ok	0.24	0.1	1.51e-02	5.7	5.7	2.5	2.5	-11.7	-10.8	16.3	-6.17e-02	-4.51e-03	-0.2
3017	ok	0.24	9.58e-02	1.48e-02	5.7	5.7	2.5	2.5	-14.8	-11.0	22.3	3.55e-02	4.25e-02	-0.2
3018	ok	0.24	0.1	1.54e-02	5.7	5.7	2.5	2.5	-11.5	-10.9	20.7	-8.63e-02	-7.16e-02	-0.3
3019	ok	0.24	9.59e-02	1.52e-02	5.7	5.7	2.5	2.5	-12.7	-10.7	17.6	-3.76e-02	-2.25e-02	-0.3
3020	ok	0.24	0.1	1.58e-02	5.7	5.7	2.5	2.5	-11.5	-10.8	21.7	-8.39e-02	-6.92e-02	-0.3
3021	ok	0.24	9.47e-02	1.58e-02	5.7	5.7	2.5	2.5	-13.6	-10.7	18.5	-3.52e-02	-2.73e-02	-0.3
3022	ok	0.24	0.1	1.61e-02	5.7	5.7	2.5	2.5	-12.2	-10.6	22.7	-7.97e-02	-6.74e-02	-0.3
3023	ok	0.24	9.26e-02	1.62e-02	5.7	5.7	2.5	2.5	-13.6	-10.6	19.6	-3.24e-02	-3.29e-02	-0.3
3024	ok	0.24	0.1	1.66e-02	5.7	5.7	2.5	2.5	-12.2	-9.8	23.8	-8.90e-02	-6.47e-02	-0.3
3025	ok	0.24	9.02e-02	1.68e-02	5.7	5.7	2.5	2.5	-13.5	-9.7	20.6	-4.42e-02	-2.58e-02	-0.3
3026	ok	0.24	9.83e-02	1.70e-02	5.7	5.7	2.5	2.5	-12.0	-9.0	25.7	-8.58e-02	-6.86e-02	-0.3
3027	ok	0.24	8.62e-02	1.70e-02	5.7	5.7	2.5	2.5	-13.9	-9.1	22.4	-3.36e-02	-3.41e-02	-0.3
3028	ok	0.24	9.33e-02	1.77e-02	5.7	5.7	2.5	2.5	-13.1	-8.6	26.4	-0.1	-8.69e-02	-0.3
3029	ok	0.24	8.97e-02	1.94e-02	5.7	5.7	2.5	2.5	-24.2	-7.0	30.3	0.1	8.39e-02	-0.3
3030	ok	0.24	9.13e-02	1.72e-02	5.7	5.7	2.5	2.5	-14.1	-7.6	26.7	-0.1	-8.18e-02	-0.3
3031	ok	0.24	8.23e-02	1.67e-02	5.7	5.7	2.5	2.5	-14.3	-5.5	26.7	1.58e-02	5.82e-02	-0.3
3032	ok	0.24	9.24e-02	1.69e-02	5.7	5.7	2.5	2.5	-17.9	-7.7	-27.3	9.54e-02	-3.92e-02	0.3
3033	ok	0.24	8.28e-02	1.66e-02	5.7	5.7	2.5	2.5	-16.0	-6.7	28.6	3.44e-02	6.29e-02	-0.3
3034	ok	0.24	9.51e-02	1.68e-02	5.7	5.7	2.5	2.5	-12.7	-7.7	-25.4	-5.54e-02	-7.68e-02	0.3
3035	ok	0.24	8.81e-02	1.64e-02	5.7	5.7	2.5	2.5	-13.8	-8.6	-21.5	-2.57e-02	-2.22e-02	0.3
3036	ok	0.24	9.85e-02	1.66e-02	5.7	5.7	2.5	2.5	-12.1	-8.7	-24.9	-8.93e-02	-6.95e-02	0.3
3037	ok	0.24	8.96e-02	1.66e-02	5.7	5.7	2.5	2.5	-15.4	-9.4	-27.0	5.27e-02	4.49e-02	0.3
3038	ok	0.24	0.1	1.68e-02	5.7	5.7	2.5	2.5	-12.7	-10.4	-19.8	-4.66e-02	3.33e-03	0.3
3039	ok	0.24	9.41e-02	1.64e-02	5.7	5.7	2.5	2.5	-13.9	-10.0	-18.9	-2.33e-02	-3.90e-02	0.3
3040	ok	0.24	0.1	1.64e-02	5.7	5.7	2.5	2.5	-12.3	-10.2	-21.8	-6.52e-02	-9.06e-02	0.3
3041	ok	0.24	9.56e-02	1.60e-02	5.7	5.7	2.5	2.5	-14.0	-10.2	-17.8	-3.01e-02	-3.45e-02	0.3
3042	ok	0.24	0.1	1.60e-02	5.7	5.7	2.5	2.5	-12.2	-10.6	-20.8	-7.14e-02	-9.09e-02	0.3
3043	ok	0.24	9.65e-02	1.55e-02	5.7	5.7	2.5	2.5	-13.3	-10.7	-21.4	-6.69e-03	6.39e-02	0.2
3044	ok	0.24	0.1	1.56e-02	5.7	5.7	2.5	2.5	-12.3	-11.4	-16.9	-4.67e-02	1.10e-03	0.3
3045	ok	0.24	9.61e-02	1.53e-02	5.7	5.7	2.5	2.5	-13.3	-10.9	-20.4	-6.82e-03	6.01e-02	0.2
3046	ok	0.24	0.1	1.52e-02	5.7	5.7	2.5	2.5	-12.3	-11.2	-15.7	-4.29e-02	-1.72e-03	0.3

3047	ok	0.24	9.51e-02	1.49e-02	5.7	5.7	2.5	2.5	-13.3	-10.8	-19.3	-6.05e-03	5.17e-02	0.2
3048	ok	0.24	0.1	1.49e-02	5.7	5.7	2.5	2.5	-12.1	-10.3	-14.9	-8.34e-02	-7.16e-03	0.3
3049	ok	0.24	9.27e-02	1.56e-02	5.7	5.7	2.5	2.5	-13.2	-11.3	24.9	-6.34e-02	-3.18e-02	0.3
3050	ok	0.24	0.1	1.56e-02	5.7	5.7	2.5	2.5	-12.0	-11.4	22.1	-0.1	-7.88e-02	0.3
3051	ok	0.24	9.28e-02	1.59e-02	5.7	5.7	2.5	2.5	-13.3	-9.9	24.8	-4.70e-02	-4.17e-02	0.3
3052	ok	0.24	9.86e-02	1.53e-02	5.7	5.7	2.5	2.5	-12.2	-10.2	22.0	-9.75e-02	-0.1	0.3
3053	ok	0.24	8.77e-02	1.64e-02	5.7	5.7	2.5	2.5	-13.8	-7.9	25.3	-6.63e-02	-3.48e-02	0.3
3054	ok	0.24	8.24e-02	1.66e-02	5.7	5.7	2.5	2.5	-14.0	-8.4	22.6	-0.1	-0.1	0.3
3055	ok	0.24	7.99e-02	1.69e-02	5.7	5.7	2.5	2.5	-16.2	-7.3	21.5	-4.55e-02	7.38e-02	0.3
3056	ok	0.24	8.84e-02	1.68e-02	5.7	5.7	2.5	2.5	-20.8	-5.9	19.0	-0.2	-9.56e-02	0.2
3057	ok	0.24	8.60e-02	1.66e-02	5.7	5.7	2.5	2.5	-18.8	-4.7	22.0	-4.25e-02	7.76e-02	0.3
3058	ok	0.24	8.84e-02	1.71e-02	5.7	5.7	2.5	2.5	-19.7	-3.4	21.8	-0.1	-6.89e-02	0.3
3059	ok	0.24	8.65e-02	1.53e-02	5.7	5.7	2.5	2.5	-25.8	-2.6	20.2	-0.2	3.20e-02	0.3
3211	ok	0.24	8.69e-02	1.49e-02	5.7	5.7	2.5	2.5	-22.4	-2.3	-22.0	0.1	7.98e-02	-0.3
3212	ok	0.24	9.13e-02	1.53e-02	5.7	5.7	2.5	2.5	-19.7	-4.2	-22.6	6.46e-02	-4.50e-02	-0.3
3213	ok	0.24	8.41e-02	1.48e-02	5.7	5.7	2.5	2.5	-15.3	-6.0	-22.7	4.18e-03	4.96e-02	-0.3
3214	ok	0.24	8.06e-02	1.51e-02	5.7	5.7	2.5	2.5	-15.5	-7.3	-24.2	-3.80e-02	-5.07e-02	-0.3
3215	ok	0.24	8.47e-02	1.53e-02	5.7	5.7	2.5	2.5	-12.7	-8.9	-22.4	5.28e-03	5.13e-02	-0.3
3216	ok	0.24	8.27e-02	1.51e-02	5.7	5.7	2.5	2.5	-13.8	-10.0	-23.6	-3.17e-02	-5.40e-02	-0.3
3217	ok	0.24	8.72e-02	1.54e-02	5.7	5.7	2.5	2.5	-11.8	-11.3	-22.3	2.43e-03	4.89e-02	-0.3
3218	ok	0.24	8.60e-02	1.52e-02	5.7	5.7	2.5	2.5	-13.3	-12.2	-23.3	-2.54e-02	-5.24e-02	-0.3
3219	ok	0.24	8.98e-02	1.54e-02	5.7	5.7	2.5	2.5	-11.7	-13.0	-22.4	-3.14e-03	4.05e-02	-0.3
3220	ok	0.24	8.90e-02	1.55e-02	5.7	5.7	2.5	2.5	-13.1	-13.5	-22.8	-2.65e-02	-4.88e-02	-0.3
3221	ok	0.24	9.42e-02	1.56e-02	5.7	5.7	2.5	2.5	-11.3	-13.4	-24.9	-2.05e-03	-6.48e-03	-0.3
3222	ok	0.24	0.1	1.26e-02	5.7	5.7	2.5	2.5	-12.8	-12.6	17.6	-2.67e-02	-4.74e-02	-0.3
3223	ok	0.24	9.66e-02	1.33e-02	5.7	5.7	2.5	2.5	-11.2	-12.6	19.7	2.38e-03	3.89e-02	-0.3
3224	ok	0.24	0.1	1.32e-02	5.7	5.7	2.5	2.5	-12.9	-13.0	18.7	-1.96e-02	-4.70e-02	-0.3
3225	ok	0.24	9.62e-02	1.39e-02	5.7	5.7	2.5	2.5	-11.2	-12.8	20.7	4.97e-03	4.27e-02	-0.3
3226	ok	0.24	0.1	1.36e-02	5.7	5.7	2.5	2.5	-12.9	-13.0	19.7	-1.89e-02	-4.60e-02	-0.3
3227	ok	0.24	9.59e-02	1.43e-02	5.7	5.7	2.5	2.5	-11.3	-12.6	21.8	7.13e-03	4.56e-02	-0.3
3228	ok	0.24	0.1	1.40e-02	5.7	5.7	2.5	2.5	-13.0	-12.8	20.7	-1.94e-02	-4.46e-02	-0.3
3229	ok	0.24	9.55e-02	1.47e-02	5.7	5.7	2.5	2.5	-11.3	-12.3	22.9	7.10e-03	4.32e-02	-0.3
3230	ok	0.24	0.1	1.44e-02	5.7	5.7	2.5	2.5	-13.0	-12.4	21.8	-1.98e-02	-4.40e-02	-0.3
3231	ok	0.24	9.42e-02	1.50e-02	5.7	5.7	2.5	2.5	-11.4	-11.8	24.0	3.92e-03	3.54e-02	-0.3
3232	ok	0.24	9.78e-02	1.46e-02	5.7	5.7	2.5	2.5	-12.9	-11.7	22.8	-2.43e-02	-4.52e-02	-0.3
3233	ok	0.24	9.39e-02	1.55e-02	5.7	5.7	2.5	2.5	-11.2	-10.8	25.9	1.06e-02	4.23e-02	-0.3
3234	ok	0.24	9.37e-02	1.52e-02	5.7	5.7	2.5	2.5	-12.9	-10.6	24.7	-2.36e-02	-4.70e-02	-0.3
3235	ok	0.24	8.70e-02	1.56e-02	5.7	5.7	2.5	2.5	-11.2	-9.8	26.5	2.05e-02	3.65e-02	-0.3
3236	ok	0.24	9.05e-02	1.51e-02	5.7	5.7	2.5	2.5	-13.6	-9.2	24.8	-4.33e-02	-4.91e-02	-0.3
3237	ok	0.24	8.92e-02	1.58e-02	5.7	5.7	2.5	2.5	-10.8	-8.5	27.9	-2.85e-03	3.02e-02	-0.3
3238	ok	0.24	8.67e-02	1.52e-02	5.7	5.7	2.5	2.5	-14.1	-8.0	25.4	-3.02e-02	-4.71e-02	-0.3
3239	ok	0.24	8.09e-02	1.51e-02	5.7	5.7	2.5	2.5	-12.4	-6.6	-26.1	1.29e-02	4.25e-02	0.3
3240	ok	0.24	8.70e-02	1.47e-02	5.7	5.7	2.5	2.5	-13.4	-8.8	-23.7	-3.52e-02	1.73e-03	0.3
3241	ok	0.24	8.33e-02	1.49e-02	5.7	5.7	2.5	2.5	-11.4	-8.4	-25.7	2.74e-02	4.32e-02	0.3
3242	ok	0.24	8.99e-02	1.47e-02	5.7	5.7	2.5	2.5	-13.3	-9.1	-24.2	4.88e-03	-4.50e-02	0.3
3243	ok	0.24	8.73e-02	1.50e-02	5.7	5.7	2.5	2.5	-11.1	-9.4	-25.4	2.31e-02	3.59e-02	0.3
3244	ok	0.24	9.44e-02	1.47e-02	5.7	5.7	2.5	2.5	-12.9	-10.4	-23.8	-2.56e-02	-4.84e-02	0.3
3245	ok	0.24	9.47e-02	1.52e-02	5.7	5.7	2.5	2.5	-11.3	-10.7	-25.0	2.84e-02	3.80e-02	0.3
3246	ok	0.24	9.85e-02	1.44e-02	5.7	5.7	2.5	2.5	-11.6	-11.1	-22.6	1.08e-02	-3.94e-02	0.3
3247	ok	0.24	9.16e-02	1.46e-02	5.7	5.7	2.5	2.5	-11.0	-11.4	-22.9	6.26e-02	5.47e-02	0.3
3248	ok	0.24	9.98e-02	1.41e-02	5.7	5.7	2.5	2.5	-13.6	-12.3	-20.9	-9.12e-03	-5.78e-02	0.3
3249	ok	0.24	9.19e-02	1.44e-02	5.7	5.7	2.5	2.5	-10.1	-12.0	-21.9	7.01e-02	5.97e-02	0.3
3250	ok	0.24	0.1	1.38e-02	5.7	5.7	2.5	2.5	-13.7	-12.7	-19.9	-8.53e-03	-5.92e-02	0.3
3251	ok	0.24	9.23e-02	1.40e-02	5.7	5.7	2.5	2.5	-10.1	-12.4	-20.8	7.31e-02	6.24e-02	0.3
3252	ok	0.24	0.1	1.34e-02	5.7	5.7	2.5	2.5	-12.1	-12.6	-19.5	1.39e-02	-5.40e-02	0.2
3253	ok	0.24	9.23e-02	1.37e-02	5.7	5.7	2.5	2.5	-10.1	-12.5	-19.8	7.18e-02	5.92e-02	0.3
3254	ok	0.24	9.95e-02	1.30e-02	5.7	5.7	2.5	2.5	-12.1	-12.6	-18.5	1.21e-02	-5.44e-02	0.2
3255	ok	0.24	9.24e-02	1.31e-02	5.7	5.7	2.5	2.5	-10.1	-12.4	-18.8	6.66e-02	5.40e-02	0.3
3256	ok	0.24	9.83e-02	1.25e-02	5.7	5.7	2.5	2.5	-11.8	-12.3	-17.6	-6.40e-03	-5.11e-02	0.2
3257	ok	0.24	9.20e-02	1.56e-02	5.7	5.7	2.5	2.5	-10.9	-13.5	24.6	-2.66e-03	-9.56e-03	0.3
3258	ok	0.24	8.58e-02	1.54e-02	5.7	5.7	2.5	2.5	-12.9	-13.5	22.9	-3.06e-02	-5.24e-02	0.3
3259	ok	0.24	8.53e-02	1.56e-02	5.7	5.7	2.5	2.5	-10.3	-12.8	22.0	7.14e-02	6.31e-02	0.3
3260	ok	0.24	8.43e-02	1.50e-02	5.7	5.7	2.5	2.5	-13.1	-12.3	22.7	-1.81e-02	-6.89e-02	0.3
3261	ok	0.24	8.28e-02	1.55e-02	5.7	5.7	2.5	2.5	-10.9	-11.0	21.4	7.21e-02	6.75e-02	0.3
3262	ok	0.24	8.10e-02	1.50e-02	5.7	5.7	2.5	2.5	-14.6	-10.2	23.2	-2.31e-02	-6.95e-02	0.3
3263	ok	0.24	8.10e-02	1.55e-02	5.7	5.7	2.5	2.5	-12.7	-8.7	21.7	7.53e-02	7.20e-02	0.3
3264	ok	0.24	8.05e-02	1.51e-02	5.7	5.7	2.5	2.5	-16.1	-6.3	24.8	-2.38e-02	-2.04e-02	0.3
3265	ok	0.24	8.39e-02	1.49e-02	5.7	5.7	2.5	2.5	-15.3	-5.7	22.0	7.59e-02	6.94e-02	0.3
3266	ok	0.24	8.79e-02	1.53e-02	5.7	5.7	2.5	2.5	-20.1	-4.3	22.4	-5.06e-02	-4.45e-02	0.3
3267	ok	0.24	8.55e-02	1.48e-02	5.7	5.7	2.5	2.5	-22.4	-2.2	21.8	0.1	7.41e-02	0.3
3419	ok	0.24	9.48e-02	1.38e-02	5.7	5.7	2.5	2.5	-21.9	-2.4	-19.4	-0.2	1.17e-02	-0.3
3420	ok	0.24	8.90e-02	1.43e-02	5.7	5.7	2.5	2.5	-15.8	-4.2	-20.9	-0.1	-9.28e-02	-0.3
3421	ok	0.24	8.13e-02	1.40e-02	5.7	5.7	2.5	2.5	-12.9	-6.7	-22.2	6.16e-02	5.68e-02	-0.3
3422	ok	0.24	8.95e-02	1.47e-02	5.7	5.7	2.5	2.5	-12.4	-7.1	-23.7	6.18e-02	7.77e-02	-0.3
3423	ok	0.24	8.34e-02	1.49e-02	5.7	5.7	2.5	2.5	-10.4	-10.1	-22.2	5.73e-02	5.31e-02	-0.3
3424	ok	0.24	9.23e-02	1.50e-02	5.7	5.7	2.5	2.5	-11.1	-11.1	-22.7	6.11e-02	-8.39e-02	-0.3
3425	ok	0.24	8.75e-02	1.53e-02	5.7	5.7	2.5	2.5	-9.8	-13.0	-22.3	5.75e-02	4.96e-02	-0.3
3426	ok	0.24	9.55e-02	1.54e-02	5.7	5.7	2.5	2.5	-10.6	-13.5	-22.8	5.59e-02	-8.39e-02	-0.3
3427	ok	0.24	9.12e-02	1.57e-02	5.7	5.7	2.5	2.5	-9.6	-14.8	-24.1	5.93e-02	-5.70e-02	-0.3

3428	ok	0.24	9.86e-02	1.59e-02	5.7	5.7	2.5	2.5	-10.5	-15.1	-23.0	5.86e-02	-7.35e-02	-0.3
3429	ok	0.24	0.1	1.61e-02	5.7	5.7	2.5	2.5	-9.5	-16.2	-22.1	5.63e-02	4.73e-02	-0.3
3430	ok	0.24	0.1	1.55e-02	5.7	5.7	2.5	2.5	-10.5	-16.5	-23.2	6.47e-02	6.69e-02	-0.3
3431	ok	0.24	0.1	1.38e-02	5.7	5.7	2.5	2.5	-9.3	-14.7	19.2	5.19e-02	4.24e-02	-0.3
3432	ok	0.24	0.1	1.36e-02	5.7	5.7	2.5	2.5	-10.3	-14.9	18.1	5.85e-02	6.26e-02	-0.3
3433	ok	0.24	0.1	1.42e-02	5.7	5.7	2.5	2.5	-9.3	-15.0	20.2	5.24e-02	4.77e-02	-0.3
3434	ok	0.24	0.1	1.40e-02	5.7	5.7	2.5	2.5	-10.3	-15.0	19.0	5.75e-02	6.32e-02	-0.3
3435	ok	0.24	0.1	1.46e-02	5.7	5.7	2.5	2.5	-9.3	-14.8	21.2	5.23e-02	5.35e-02	-0.3
3436	ok	0.24	0.1	1.44e-02	5.7	5.7	2.5	2.5	-10.3	-14.9	20.1	5.53e-02	6.38e-02	-0.3
3437	ok	0.24	0.1	1.50e-02	5.7	5.7	2.5	2.5	-9.4	-14.5	22.4	4.96e-02	5.15e-02	-0.3
3438	ok	0.24	0.1	1.47e-02	5.7	5.7	2.5	2.5	-10.4	-14.5	21.2	5.34e-02	6.51e-02	-0.3
3439	ok	0.24	9.78e-02	1.53e-02	5.7	5.7	2.5	2.5	-9.4	-13.8	23.5	4.59e-02	4.89e-02	-0.3
3440	ok	0.24	0.1	1.50e-02	5.7	5.7	2.5	2.5	-10.4	-13.7	22.2	5.69e-02	6.56e-02	-0.3
3441	ok	0.24	9.21e-02	1.58e-02	5.7	5.7	2.5	2.5	-9.2	-12.7	25.4	5.05e-02	5.62e-02	-0.3
3442	ok	0.24	9.73e-02	1.54e-02	5.7	5.7	2.5	2.5	-10.4	-12.6	24.2	5.88e-02	6.99e-02	-0.3
3443	ok	0.24	8.76e-02	1.57e-02	5.7	5.7	2.5	2.5	-9.5	-11.5	25.8	4.90e-02	6.27e-02	-0.3
3444	ok	0.24	9.46e-02	1.51e-02	5.7	5.7	2.5	2.5	-10.5	-11.1	24.3	5.37e-02	7.13e-02	-0.3
3445	ok	0.24	8.10e-02	1.57e-02	5.7	5.7	2.5	2.5	-8.7	-10.3	26.6	5.09e-02	5.89e-02	-0.3
3446	ok	0.24	8.77e-02	1.52e-02	5.7	5.7	2.5	2.5	-11.0	-9.5	25.1	4.79e-02	6.60e-02	-0.3
3447	ok	0.24	8.01e-02	1.56e-02	5.7	5.7	2.5	2.5	-12.0	-9.0	-26.1	2.55e-02	5.93e-02	0.3
3448	ok	0.24	8.90e-02	1.47e-02	5.7	5.7	2.5	2.5	-12.2	-9.9	-23.9	4.70e-02	6.96e-02	0.3
3449	ok	0.24	8.30e-02	1.52e-02	5.7	5.7	2.5	2.5	-11.4	-6.7	26.6	4.05e-02	6.79e-02	-0.3
3450	ok	0.24	9.38e-02	1.49e-02	5.7	5.7	2.5	2.5	-10.5	-11.0	-23.7	5.47e-02	7.28e-02	0.3
3451	ok	0.24	8.81e-02	1.53e-02	5.7	5.7	2.5	2.5	-9.4	-11.3	-24.9	5.25e-02	6.26e-02	0.3
3452	ok	0.24	9.87e-02	1.49e-02	5.7	5.7	2.5	2.5	-10.4	-12.4	-23.3	6.29e-02	7.18e-02	0.3
3453	ok	0.24	9.34e-02	1.54e-02	5.7	5.7	2.5	2.5	-11.2	-12.9	-24.9	3.44e-02	5.85e-02	0.3
3454	ok	0.24	0.1	1.46e-02	5.7	5.7	2.5	2.5	-10.7	-13.6	-21.2	5.34e-02	8.26e-02	0.3
3455	ok	0.24	0.1	1.47e-02	5.7	5.7	2.5	2.5	-11.2	-14.0	-22.6	3.54e-02	6.41e-02	0.3
3456	ok	0.24	0.1	1.45e-02	5.7	5.7	2.5	2.5	-11.2	-14.3	-20.1	5.29e-02	8.17e-02	0.3
3457	ok	0.24	0.1	1.44e-02	5.7	5.7	2.5	2.5	-11.3	-14.7	-21.5	3.99e-02	7.13e-02	0.3
3458	ok	0.24	0.1	1.42e-02	5.7	5.7	2.5	2.5	-11.2	-14.7	-19.1	5.62e-02	8.10e-02	0.3
3459	ok	0.24	0.1	1.41e-02	5.7	5.7	2.5	2.5	-11.2	-15.1	-20.4	4.18e-02	7.09e-02	0.3
3460	ok	0.24	0.1	1.38e-02	5.7	5.7	2.5	2.5	-11.2	-14.9	-18.1	5.83e-02	8.03e-02	0.3
3461	ok	0.24	0.1	1.37e-02	5.7	5.7	2.5	2.5	-11.1	-15.3	-19.3	4.03e-02	6.53e-02	0.3
3462	ok	0.24	0.1	1.34e-02	5.7	5.7	2.5	2.5	-11.2	-14.8	-17.1	5.67e-02	7.88e-02	0.3
3463	ok	0.24	0.1	1.32e-02	5.7	5.7	2.5	2.5	-11.0	-15.1	-18.4	3.68e-02	5.73e-02	0.3
3464	ok	0.24	9.95e-02	1.29e-02	5.7	5.7	2.5	2.5	-10.8	-13.6	-17.3	5.24e-02	-6.79e-02	0.2
3465	ok	0.24	9.85e-02	1.60e-02	5.7	5.7	2.5	2.5	-11.7	-16.4	24.2	-1.74e-03	-7.27e-02	0.3
3466	ok	0.24	9.80e-02	1.58e-02	5.7	5.7	2.5	2.5	-11.1	-15.5	23.3	5.98e-02	8.09e-02	0.3
3467	ok	0.24	8.89e-02	1.51e-02	5.7	5.7	2.5	2.5	-11.3	-15.6	22.2	4.01e-02	5.97e-02	0.3
3468	ok	0.24	9.39e-02	1.52e-02	5.7	5.7	2.5	2.5	-11.4	-13.4	22.0	5.65e-02	-0.1	0.3
3469	ok	0.24	8.32e-02	1.49e-02	5.7	5.7	2.5	2.5	-11.9	-13.5	21.5	4.70e-02	7.29e-02	0.3
3470	ok	0.24	8.94e-02	1.49e-02	5.7	5.7	2.5	2.5	-11.6	-11.1	22.2	7.59e-02	-9.88e-02	0.3
3471	ok	0.24	7.98e-02	1.47e-02	5.7	5.7	2.5	2.5	-12.5	-10.7	21.7	5.08e-02	7.34e-02	0.3
3472	ok	0.24	8.66e-02	1.46e-02	5.7	5.7	2.5	2.5	-12.9	-7.2	23.2	7.51e-02	9.28e-02	0.3
3473	ok	0.24	7.65e-02	1.39e-02	5.7	5.7	2.5	2.5	-15.0	-7.2	21.8	4.70e-02	7.71e-02	0.3
3474	ok	0.24	8.77e-02	1.43e-02	5.7	5.7	2.5	2.5	-16.1	-4.2	20.7	-0.1	-0.1	0.3
3475	ok	0.24	9.37e-02	1.39e-02	5.7	5.7	2.5	2.5	-22.3	-2.4	19.2	-0.2	5.90e-03	0.3
3773	ok	0.24	0.1	1.39e-02	5.7	5.7	2.5	2.5	-20.7	-3.7	-17.6	-0.3	4.39e-05	-0.2
3774	ok	0.24	0.1	1.33e-02	5.7	5.7	2.5	2.5	-16.2	-5.8	-19.2	-7.83e-02	-8.34e-02	-0.2
3775	ok	0.24	0.1	1.40e-02	5.7	5.7	2.5	2.5	-9.6	-5.5	-26.1	-4.87e-02	-4.14e-02	-0.3
3776	ok	0.24	0.1	1.51e-02	5.7	5.7	2.5	2.5	-7.8	-9.5	-25.9	-8.00e-02	-9.66e-02	-0.3
3777	ok	0.24	0.1	1.58e-02	5.7	5.7	2.5	2.5	-10.3	-11.0	-23.9	5.27e-02	-3.92e-02	-0.3
3778	ok	0.24	0.1	1.62e-02	5.7	5.7	2.5	2.5	-6.9	-13.2	-26.1	-6.51e-02	-9.36e-02	-0.3
3779	ok	0.24	0.1	1.67e-02	5.7	5.7	2.5	2.5	-9.8	-14.7	-23.8	4.70e-02	-4.52e-02	-0.3
3780	ok	0.24	0.1	1.70e-02	5.7	5.7	2.5	2.5	-6.6	-15.9	-26.1	-5.96e-02	-9.21e-02	-0.3
3781	ok	0.24	0.1	1.74e-02	5.7	5.7	2.5	2.5	-9.8	-17.4	-23.9	4.69e-02	-5.06e-02	-0.3
3782	ok	0.24	0.1	1.75e-02	5.7	5.7	2.5	2.5	-11.3	-18.2	-24.6	9.84e-02	5.88e-02	-0.3
3783	ok	0.24	0.1	1.78e-02	5.7	5.7	2.5	2.5	-9.8	-18.9	-24.2	5.36e-02	-4.48e-02	-0.3
3784	ok	0.24	0.1	1.75e-02	5.7	5.7	2.5	2.5	-11.3	-19.3	-24.1	0.1	6.25e-02	-0.3
3785	ok	0.24	0.1	1.78e-02	5.7	5.7	2.5	2.5	-7.6	-19.0	-28.4	-6.20e-03	-6.05e-02	-0.3
3786	ok	0.24	0.1	1.78e-02	5.7	5.7	2.5	2.5	-6.5	-18.9	-25.7	-3.96e-02	-8.24e-02	-0.3
3787	ok	0.24	0.1	1.80e-02	5.7	5.7	2.5	2.5	-7.6	-19.3	-28.8	-6.96e-04	-6.25e-02	-0.3
3788	ok	0.24	0.1	1.79e-02	5.7	5.7	2.5	2.5	-6.5	-18.6	-26.1	-3.63e-02	-7.87e-02	-0.3
3789	ok	0.24	0.1	1.81e-02	5.7	5.7	2.5	2.5	-7.7	-19.1	-29.2	1.03e-03	-6.46e-02	-0.3
3790	ok	0.24	0.1	1.81e-02	5.7	5.7	2.5	2.5	-6.5	-18.0	-26.7	-3.56e-02	-7.66e-02	-0.3
3791	ok	0.24	0.1	1.82e-02	5.7	5.7	2.5	2.5	-7.7	-18.5	-29.8	-3.22e-04	-6.82e-02	-0.3
3792	ok	0.24	0.1	1.81e-02	5.7	5.7	2.5	2.5	-6.5	-17.2	-27.2	-3.74e-02	-7.70e-02	-0.3
3793	ok	0.24	0.1	1.82e-02	5.7	5.7	2.5	2.5	-7.7	-17.7	-30.3	6.63e-03	-7.13e-02	-0.3
3794	ok	0.24	0.1	1.79e-02	5.7	5.7	2.5	2.5	-6.3	-14.2	-27.4	-4.48e-02	-7.47e-02	-0.3
3795	ok	0.24	0.1	1.75e-02	5.7	5.7	2.5	2.5	-7.5	-14.6	-30.5	-6.38e-03	-6.75e-02	-0.3
3796	ok	0.24	0.1	1.72e-02	5.7	5.7	2.5	2.5	-6.4	-12.7	-26.7	-3.84e-02	-7.12e-02	-0.4
3797	ok	0.24	0.1	1.69e-02	5.7	5.7	2.5	2.5	-7.5	-13.0	-30.0	1.31e-02	-6.56e-02	-0.3
3798	ok	0.24	0.1	1.68e-02	5.7	5.7	2.5	2.5	-10.9	-12.4	23.2	9.75e-02	7.09e-02	-0.3
3799	ok	0.24	0.1	1.65e-02	5.7	5.7	2.5	2.5	-6.8	-11.3	-30.4	4.98e-03	-6.73e-02	-0.3
3800	ok	0.24	0.1	1.62e-02	5.7	5.7	2.5	2.5	-11.2	-10.5	24.0	0.1	7.51e-02	-0.3
3801	ok	0.24	9.64e-02	1.65e-02	5.7	5.7	2.5	2.5	-7.4	-9.2	31.1	-1.41e-03	-6.99e-02	0.4
3802	ok	0.24	0.1	1.64e-02	5.7	5.7	2.5	2.5	-6.7	-9.9	31.0	-9.29e-03	5.53e-02	0.4
3803	ok	0.24	9.65e-02	1.68e-02	5.7	5.7	2.5	2.5	-7.6	-11.1	30.7	7.83e-03	-6.63e-02	0.4

3804	ok	0.24	0.1	1.69e-02	5.7	5.7	2.5	2.5	-6.4	-10.9	27.4	-3.14e-02	-6.92e-02	0.4
3805	ok	0.24	0.1	1.71e-02	5.7	5.7	2.5	2.5	-7.5	-12.8	30.5	7.43e-03	-6.36e-02	0.3
3806	ok	0.24	0.1	1.74e-02	5.7	5.7	2.5	2.5	-6.3	-12.6	27.2	-4.03e-02	-7.25e-02	0.4
3807	ok	0.24	0.1	1.77e-02	5.7	5.7	2.5	2.5	-7.6	-14.5	31.0	-3.36e-03	-5.67e-02	0.3
3808	ok	0.24	0.1	1.85e-02	5.7	5.7	2.5	2.5	-6.7	-14.2	27.8	-4.70e-02	-6.77e-02	0.3
3809	ok	0.24	0.1	1.87e-02	5.7	5.7	2.5	2.5	-10.0	-17.1	30.8	1.80e-02	-3.11e-02	0.4
3810	ok	0.24	0.1	1.88e-02	5.7	5.7	2.5	2.5	-6.7	-17.1	28.2	-5.32e-02	-5.35e-02	0.3
3811	ok	0.24	0.1	1.87e-02	5.7	5.7	2.5	2.5	-10.3	-17.9	30.4	2.30e-02	-2.38e-02	0.4
3812	ok	0.24	0.1	1.87e-02	5.7	5.7	2.5	2.5	-6.8	-17.9	27.7	-5.14e-02	-5.07e-02	0.3
3813	ok	0.24	0.1	1.86e-02	5.7	5.7	2.5	2.5	-10.3	-18.4	29.7	2.77e-02	-2.03e-02	0.4
3814	ok	0.24	0.1	1.85e-02	5.7	5.7	2.5	2.5	-6.8	-18.5	27.0	-5.33e-02	-5.25e-02	0.3
3815	ok	0.24	0.1	1.84e-02	5.7	5.7	2.5	2.5	-10.1	-18.6	29.1	1.87e-02	-2.29e-02	0.4
3816	ok	0.24	0.1	1.83e-02	5.7	5.7	2.5	2.5	-6.8	-18.7	26.5	-5.94e-02	-5.61e-02	0.3
3817	ok	0.24	0.1	1.81e-02	5.7	5.7	2.5	2.5	-9.6	-18.5	28.8	3.43e-04	-3.57e-02	0.4
3818	ok	0.24	0.1	1.77e-02	5.7	5.7	2.5	2.5	-6.4	-18.4	26.2	-6.98e-02	-6.35e-02	0.3
3819	ok	0.24	0.1	1.79e-02	5.7	5.7	2.5	2.5	-10.0	-19.0	23.9	5.33e-02	-3.59e-02	0.3
3820	ok	0.24	0.1	1.79e-02	5.7	5.7	2.5	2.5	-6.9	-17.7	26.1	-7.19e-02	-8.27e-02	0.3
3821	ok	0.24	0.1	1.77e-02	5.7	5.7	2.5	2.5	-9.5	-16.2	29.3	-2.08e-02	-4.71e-02	0.3
3822	ok	0.24	0.1	1.71e-02	5.7	5.7	2.5	2.5	-6.8	-15.9	26.8	-8.02e-02	-7.51e-02	0.3
3823	ok	0.24	0.1	1.71e-02	5.7	5.7	2.5	2.5	-10.6	-14.7	23.4	4.71e-02	-5.05e-02	0.3
3824	ok	0.24	0.1	1.63e-02	5.7	5.7	2.5	2.5	-7.3	-13.2	26.3	-8.24e-02	-9.85e-02	0.3
3825	ok	0.24	0.1	1.61e-02	5.7	5.7	2.5	2.5	-11.1	-10.9	23.6	5.38e-02	-4.47e-02	0.3
3826	ok	0.24	0.1	1.52e-02	5.7	5.7	2.5	2.5	-8.2	-9.5	26.0	-9.81e-02	-0.1	0.3
3827	ok	0.24	0.1	1.43e-02	5.7	5.7	2.5	2.5	-10.3	-5.5	26.5	-6.72e-02	-4.90e-02	0.3
3828	ok	0.24	0.1	1.33e-02	5.7	5.7	2.5	2.5	-11.0	-5.2	23.3	-9.20e-02	-8.98e-02	0.2
3829	ok	0.24	0.1	1.42e-02	5.7	5.7	2.5	2.5	-21.1	-3.8	17.4	-0.3	-3.47e-04	0.2
4011	ok	0.24	0.1	1.45e-02	5.7	5.7	2.5	2.5	-14.6	-3.7	-19.9	-3.19e-02	4.74e-02	-0.2
4012	ok	0.24	0.1	1.34e-02	5.7	5.7	2.5	2.5	-11.5	-6.1	-23.5	-4.31e-02	-7.40e-02	-0.3
4013	ok	0.24	0.1	1.48e-02	5.7	5.7	2.5	2.5	-6.8	-5.8	-24.9	-3.20e-02	-2.45e-02	-0.2
4014	ok	0.24	0.1	1.52e-02	5.7	5.7	2.5	2.5	-8.5	-10.7	-26.5	-3.81e-02	-6.36e-02	-0.3
4015	ok	0.24	0.1	1.59e-02	5.7	5.7	2.5	2.5	-5.9	-10.8	-27.9	-1.81e-02	-1.86e-02	-0.3
4016	ok	0.24	0.1	1.65e-02	5.7	5.7	2.5	2.5	-6.1	-14.3	-27.0	-2.62e-02	-5.88e-02	-0.3
4017	ok	0.24	0.1	1.68e-02	5.7	5.7	2.5	2.5	-5.7	-14.9	-28.5	-1.76e-02	-1.92e-02	-0.3
4018	ok	0.24	0.1	1.74e-02	5.7	5.7	2.5	2.5	-5.8	-17.3	-27.3	-2.59e-02	-5.45e-02	-0.3
4019	ok	0.24	0.1	1.75e-02	5.7	5.7	2.5	2.5	-6.2	-20.3	-26.8	-1.82e-02	2.21e-02	-0.3
4020	ok	0.24	0.1	1.81e-02	5.7	5.7	2.5	2.5	-5.8	-19.4	-27.4	-2.65e-02	-4.99e-02	-0.3
4021	ok	0.24	0.1	1.79e-02	5.7	5.7	2.5	2.5	-6.2	-21.7	-26.4	-2.21e-02	2.34e-02	-0.3
4022	ok	0.24	0.1	1.82e-02	5.7	5.7	2.5	2.5	-5.7	-20.4	-27.0	-2.80e-02	-4.95e-02	-0.3
4023	ok	0.24	0.1	1.80e-02	5.7	5.7	2.5	2.5	-6.2	-22.4	-27.0	-2.06e-02	2.45e-02	-0.3
4024	ok	0.24	0.1	1.86e-02	5.7	5.7	2.5	2.5	-5.6	-20.7	-27.5	-2.40e-02	-4.89e-02	-0.3
4025	ok	0.24	0.1	1.82e-02	5.7	5.7	2.5	2.5	-6.0	-20.9	-29.0	-2.07e-02	-2.67e-02	-0.3
4026	ok	0.24	0.1	1.88e-02	5.7	5.7	2.5	2.5	-5.6	-20.3	-28.1	-2.19e-02	-4.70e-02	-0.4
4027	ok	0.24	0.1	1.84e-02	5.7	5.7	2.5	2.5	-6.0	-20.5	-29.5	-1.93e-02	-2.90e-02	-0.3
4028	ok	0.24	0.1	1.89e-02	5.7	5.7	2.5	2.5	-5.6	-19.6	-28.8	-1.94e-02	-4.62e-02	-0.4
4029	ok	0.24	0.1	1.84e-02	5.7	5.7	2.5	2.5	-6.0	-19.7	-30.2	-1.70e-02	-3.10e-02	-0.3
4030	ok	0.24	0.1	1.89e-02	5.7	5.7	2.5	2.5	-5.5	-18.5	-29.3	-1.71e-02	-4.70e-02	-0.4
4031	ok	0.24	0.1	1.84e-02	5.7	5.7	2.5	2.5	-6.0	-18.6	-30.8	-1.38e-02	-3.23e-02	-0.3
4032	ok	0.24	0.1	1.88e-02	5.7	5.7	2.5	2.5	-5.5	-15.3	-29.6	-1.54e-02	-4.66e-02	-0.4
4033	ok	0.24	0.1	1.79e-02	5.7	5.7	2.5	2.5	-5.9	-17.9	-29.4	-2.33e-02	2.94e-02	-0.3
4034	ok	0.24	0.1	1.81e-02	5.7	5.7	2.5	2.5	-4.2	-15.1	-29.0	-2.63e-02	-5.04e-02	-0.4
4035	ok	0.24	0.1	1.72e-02	5.7	5.7	2.5	2.5	-4.8	-15.1	-30.6	-1.73e-02	-3.66e-02	-0.3
4036	ok	0.24	0.1	1.76e-02	5.7	5.7	2.5	2.5	-3.8	-13.0	-29.3	-2.03e-02	-4.92e-02	-0.4
4037	ok	0.24	0.1	1.66e-02	5.7	5.7	2.5	2.5	-4.4	-13.0	-30.7	-1.50e-02	-3.92e-02	-0.3
4038	ok	0.24	0.1	1.70e-02	5.7	5.7	2.5	2.5	-3.9	-11.4	-29.0	-2.00e-02	-4.87e-02	-0.4
4039	ok	0.24	0.1	1.64e-02	5.7	5.7	2.5	2.5	-7.2	-9.1	30.0	-2.04e-02	-4.09e-02	0.3
4040	ok	0.24	0.1	1.72e-02	5.7	5.7	2.5	2.5	-5.4	-9.1	30.1	-9.25e-03	-4.48e-02	0.4
4041	ok	0.24	0.1	1.68e-02	5.7	5.7	2.5	2.5	-4.9	-12.7	31.1	-1.65e-02	-3.88e-02	0.3
4042	ok	0.24	0.1	1.77e-02	5.7	5.7	2.5	2.5	-4.0	-12.8	29.4	-2.32e-02	-5.07e-02	0.4
4043	ok	0.24	0.1	1.73e-02	5.7	5.7	2.5	2.5	-4.9	-14.9	31.0	-1.76e-02	-3.52e-02	0.3
4044	ok	0.24	0.1	1.83e-02	5.7	5.7	2.5	2.5	-3.9	-15.0	29.4	-2.68e-02	-5.11e-02	0.4
4045	ok	0.24	0.1	1.79e-02	5.7	5.7	2.5	2.5	-5.9	-15.2	31.6	-1.38e-02	-3.88e-02	0.3
4046	ok	0.24	0.1	1.88e-02	5.7	5.7	2.5	2.5	-5.9	-15.2	30.0	-7.72e-03	-5.38e-02	0.4
4047	ok	0.24	0.1	1.93e-02	5.7	5.7	2.5	2.5	-9.7	-18.4	28.6	1.19e-02	4.27e-02	0.4
4048	ok	0.24	0.1	1.92e-02	5.7	5.7	2.5	2.5	-6.4	-19.5	29.1	-7.85e-03	-6.65e-02	0.4
4049	ok	0.24	0.1	1.94e-02	5.7	5.7	2.5	2.5	-9.8	-19.8	28.2	3.19e-03	3.44e-02	0.4
4050	ok	0.24	0.1	1.92e-02	5.7	5.7	2.5	2.5	-6.5	-20.6	28.4	-8.64e-03	-6.19e-02	0.4
4051	ok	0.24	0.1	1.93e-02	5.7	5.7	2.5	2.5	-9.8	-21.2	29.8	-1.73e-02	-4.50e-02	0.3
4052	ok	0.24	0.1	1.91e-02	5.7	5.7	2.5	2.5	-6.6	-21.4	27.7	-9.49e-03	-6.28e-02	0.4
4053	ok	0.24	0.1	1.91e-02	5.7	5.7	2.5	2.5	-8.2	-21.3	26.7	4.10e-02	3.08e-02	0.3
4054	ok	0.24	0.1	1.89e-02	5.7	5.7	2.5	2.5	-6.6	-21.7	27.0	-1.17e-02	-6.75e-02	0.4
4055	ok	0.24	0.1	1.89e-02	5.7	5.7	2.5	2.5	-8.1	-21.3	26.1	5.03e-02	3.36e-02	0.3
4056	ok	0.24	0.1	1.85e-02	5.7	5.7	2.5	2.5	-6.2	-21.5	26.5	-2.71e-02	-6.25e-02	0.3
4057	ok	0.24	0.1	1.80e-02	5.7	5.7	2.5	2.5	-5.9	-19.9	29.2	-2.50e-02	-3.68e-02	0.3
4058	ok	0.24	0.1	1.84e-02	5.7	5.7	2.5	2.5	-6.2	-19.5	27.5	-1.55e-02	-6.49e-02	0.3
4059	ok	0.24	0.1	1.83e-02	5.7	5.7	2.5	2.5	-8.2	-19.1	25.9	6.82e-02	4.79e-02	0.3
4060	ok	0.24	0.1	1.77e-02	5.7	5.7	2.5	2.5	-7.5	-19.1	27.0	-3.49e-02	-7.39e-02	0.3
4061	ok	0.24	0.1	1.69e-02	5.7	5.7	2.5	2.5	-6.2	-15.0	29.0	-2.30e-02	-1.89e-02	0.3
4062	ok	0.24	0.1	1.67e-02	5.7	5.7	2.5	2.5	-6.4	-14.4	27.1	-3.26e-02	-5.87e-02	0.3
4063	ok	0.24	0.1	1.59e-02	5.7	5.7	2.5	2.5	-6.4	-10.8	28.3	-2.29e-02	-2.01e-02	0.3

4064	ok	0.24	0.1	1.53e-02	5.7	5.7	2.5	2.5	-8.9	-10.7	26.6	-4.57e-02	-6.69e-02	0.3
4065	ok	0.24	0.1	1.48e-02	5.7	5.7	2.5	2.5	-7.2	-5.9	25.5	-3.68e-02	-2.84e-02	0.3
4066	ok	0.24	0.1	1.36e-02	5.7	5.7	2.5	2.5	-11.7	-6.2	23.8	-5.08e-02	-7.80e-02	0.3
4067	ok	0.24	0.1	1.47e-02	5.7	5.7	2.5	2.5	-14.9	-3.8	20.2	-3.11e-02	5.11e-02	0.2
4522	ok	0.24	9.36e-02	1.20e-02	5.7	5.7	2.5	2.5	-9.7	-1.7	-16.4	-0.2	-3.20e-02	-0.2
4523	ok	0.24	0.1	1.31e-02	5.7	5.7	2.5	2.5	-9.4	-8.3	-22.7	-7.32e-02	-6.98e-02	-0.3
4524	ok	0.24	0.1	1.37e-02	5.7	5.7	2.5	2.5	-7.3	-9.4	-24.5	-4.90e-02	-4.82e-02	-0.3
4525	ok	0.24	0.1	1.55e-02	5.7	5.7	2.5	2.5	-6.9	-10.0	-26.2	-4.60e-02	-6.90e-02	-0.3
4526	ok	0.24	0.1	1.62e-02	5.7	5.7	2.5	2.5	-6.3	-14.6	-25.7	-3.73e-02	-6.44e-02	-0.3
4527	ok	0.24	0.1	1.69e-02	5.7	5.7	2.5	2.5	-6.5	-15.3	-27.4	-4.74e-02	-8.05e-02	-0.3
4528	ok	0.24	0.1	1.77e-02	5.7	5.7	2.5	2.5	-6.1	-18.4	-26.2	-3.89e-02	-7.25e-02	-0.3
4529	ok	0.24	0.1	1.79e-02	5.7	5.7	2.5	2.5	-6.4	-19.0	-27.9	-4.90e-02	-8.49e-02	-0.3
4530	ok	0.24	0.1	1.87e-02	5.7	5.7	2.5	2.5	-6.1	-21.1	-26.5	-3.97e-02	-7.88e-02	-0.3
4531	ok	0.24	0.1	1.86e-02	5.7	5.7	2.5	2.5	-6.5	-21.7	-28.1	-4.72e-02	-8.89e-02	-0.3
4532	ok	0.24	0.1	1.94e-02	5.7	5.7	2.5	2.5	-6.2	-22.9	-26.2	-4.22e-02	-9.02e-02	-0.3
4533	ok	0.24	0.1	1.88e-02	5.7	5.7	2.5	2.5	-6.5	-23.3	-27.8	-5.08e-02	-9.57e-02	-0.3
4534	ok	0.24	0.1	1.96e-02	5.7	5.7	2.5	2.5	-6.0	-23.5	-26.9	-5.33e-02	-9.10e-02	-0.3
4535	ok	0.24	0.1	1.91e-02	5.7	5.7	2.5	2.5	-6.3	-23.7	-28.3	-5.32e-02	-0.1	-0.3
4536	ok	0.24	0.1	1.99e-02	5.7	5.7	2.5	2.5	-6.1	-23.4	-27.5	-5.57e-02	-9.78e-02	-0.3
4537	ok	0.24	0.1	1.92e-02	5.7	5.7	2.5	2.5	-6.3	-23.5	-28.9	-5.39e-02	-0.1	-0.4
4538	ok	0.24	0.1	2.00e-02	5.7	5.7	2.5	2.5	-6.1	-22.6	-28.3	-5.58e-02	6.15e-02	-0.3
4539	ok	0.24	0.1	1.92e-02	5.7	5.7	2.5	2.5	-6.3	-22.7	-29.6	-5.22e-02	5.53e-02	-0.4
4540	ok	0.24	0.1	1.99e-02	5.7	5.7	2.5	2.5	-6.2	-21.2	-28.7	-4.33e-02	6.54e-02	-0.3
4541	ok	0.24	0.1	1.91e-02	5.7	5.7	2.5	2.5	-6.2	-21.5	-30.3	-4.86e-02	5.84e-02	-0.4
4542	ok	0.24	0.1	1.98e-02	5.7	5.7	2.5	2.5	-5.0	-19.8	-29.2	-4.92e-02	6.41e-02	-0.3
4543	ok	0.24	0.1	1.87e-02	5.7	5.7	2.5	2.5	-4.9	-20.0	-30.8	-5.45e-02	5.65e-02	-0.4
4544	ok	0.24	0.1	1.94e-02	5.7	5.7	2.5	2.5	-4.9	-17.9	-29.3	-4.53e-02	6.55e-02	-0.3
4545	ok	0.24	0.1	1.81e-02	5.7	5.7	2.5	2.5	-4.9	-19.3	-29.0	-3.68e-02	-8.23e-02	-0.4
4546	ok	0.24	0.1	1.86e-02	5.7	5.7	2.5	2.5	-4.7	-15.6	-29.6	-4.19e-02	6.91e-02	-0.3
4547	ok	0.24	0.1	1.76e-02	5.7	5.7	2.5	2.5	-4.7	-17.0	-29.2	-4.11e-02	-8.58e-02	-0.4
4548	ok	0.24	0.1	1.78e-02	5.7	5.7	2.5	2.5	-5.1	-17.1	-30.8	-2.92e-02	-7.25e-02	-0.3
4549	ok	0.24	0.1	1.70e-02	5.7	5.7	2.5	2.5	-4.7	-14.6	-29.0	-4.28e-02	-8.71e-02	-0.4
4550	ok	0.24	0.1	1.73e-02	5.7	5.7	2.5	2.5	-5.0	-14.6	-30.7	-3.23e-02	-7.92e-02	-0.3
4551	ok	0.24	0.1	1.72e-02	5.7	5.7	2.5	2.5	-5.6	-12.8	30.0	-2.91e-02	-8.41e-02	0.4
4552	ok	0.24	0.1	1.80e-02	5.7	5.7	2.5	2.5	-5.3	-16.9	31.2	-2.84e-02	-7.27e-02	0.3
4553	ok	0.24	0.1	1.76e-02	5.7	5.7	2.5	2.5	-4.9	-16.8	29.4	-3.87e-02	-8.57e-02	0.4
4554	ok	0.24	0.1	1.87e-02	5.7	5.7	2.5	2.5	-4.8	-15.4	29.8	-4.20e-02	6.66e-02	0.3
4555	ok	0.24	0.1	1.82e-02	5.7	5.7	2.5	2.5	-4.9	-19.1	29.4	-3.57e-02	-8.26e-02	0.4
4556	ok	0.24	0.1	1.96e-02	5.7	5.7	2.5	2.5	-5.7	-17.7	29.7	-4.41e-02	6.62e-02	0.3
4557	ok	0.24	0.1	1.89e-02	5.7	5.7	2.5	2.5	-6.8	-19.8	31.0	-2.29e-02	7.20e-02	0.4
4558	ok	0.24	0.1	2.01e-02	5.7	5.7	2.5	2.5	-6.5	-19.7	28.6	1.20e-02	5.67e-02	0.3
4559	ok	0.24	0.1	1.92e-02	5.7	5.7	2.5	2.5	-7.1	-21.4	30.6	-2.61e-02	7.13e-02	0.4
4560	ok	0.24	0.1	2.03e-02	5.7	5.7	2.5	2.5	-6.7	-21.4	28.1	1.09e-02	4.98e-02	0.3
4561	ok	0.24	0.1	1.92e-02	5.7	5.7	2.5	2.5	-7.2	-22.6	29.8	-2.92e-02	6.89e-02	0.4
4562	ok	0.24	0.1	2.03e-02	5.7	5.7	2.5	2.5	-6.8	-22.6	27.3	1.12e-02	4.68e-02	0.3
4563	ok	0.24	0.1	1.92e-02	5.7	5.7	2.5	2.5	-7.2	-23.4	29.1	-2.89e-02	6.49e-02	0.4
4564	ok	0.24	0.1	2.01e-02	5.7	5.7	2.5	2.5	-6.9	-23.4	26.6	1.26e-02	4.63e-02	0.3
4565	ok	0.24	0.1	1.90e-02	5.7	5.7	2.5	2.5	-7.2	-23.7	28.4	-2.57e-02	5.91e-02	0.4
4566	ok	0.24	0.1	1.99e-02	5.7	5.7	2.5	2.5	-6.9	-23.7	25.9	1.45e-02	4.50e-02	0.3
4567	ok	0.24	0.1	1.87e-02	5.7	5.7	2.5	2.5	-6.7	-23.3	28.2	-4.29e-02	-9.73e-02	0.3
4568	ok	0.24	0.1	1.95e-02	5.7	5.7	2.5	2.5	-6.1	-23.0	26.4	-4.27e-02	-9.43e-02	0.3
4569	ok	0.24	0.1	1.87e-02	5.7	5.7	2.5	2.5	-7.1	-21.6	28.1	-2.14e-02	-6.91e-02	0.4
4570	ok	0.24	0.1	1.90e-02	5.7	5.7	2.5	2.5	-6.9	-21.3	25.6	1.56e-02	-7.73e-02	0.3
4571	ok	0.24	0.1	1.77e-02	5.7	5.7	2.5	2.5	-6.9	-19.1	28.0	-3.86e-02	-8.53e-02	0.3
4572	ok	0.24	0.1	1.79e-02	5.7	5.7	2.5	2.5	-6.2	-18.6	26.1	-3.69e-02	-7.90e-02	0.3
4573	ok	0.24	0.1	1.70e-02	5.7	5.7	2.5	2.5	-6.8	-15.4	27.6	-4.31e-02	-7.79e-02	0.3
4574	ok	0.24	0.1	1.65e-02	5.7	5.7	2.5	2.5	-6.5	-14.7	25.6	-3.52e-02	-6.50e-02	0.3
4575	ok	0.24	0.1	1.56e-02	5.7	5.7	2.5	2.5	-7.2	-10.1	26.3	-4.27e-02	-6.68e-02	0.3
4576	ok	0.24	0.1	1.38e-02	5.7	5.7	2.5	2.5	-7.5	-9.5	24.4	-4.81e-02	-5.07e-02	0.3
4577	ok	0.24	0.1	1.33e-02	5.7	5.7	2.5	2.5	-9.6	-8.4	23.0	-7.14e-02	-6.84e-02	0.3
4578	ok	0.24	9.34e-02	1.21e-02	5.7	5.7	2.5	2.5	-9.9	-1.7	16.6	-0.2	-3.09e-02	0.2
4934	ok	0.24	7.91e-02	8.82e-03	5.7	5.7	2.5	2.5	-11.4	-2.1	-14.0	-0.5	-0.1	-0.1
4935	ok	0.24	9.92e-02	1.07e-02	5.7	5.7	2.5	2.5	-7.1	-7.1	-18.6	-0.1	-5.68e-02	-0.2
4936	ok	0.24	0.1	1.23e-02	5.7	5.7	2.5	2.5	-4.8	-12.2	-20.5	-6.85e-02	-9.85e-02	-0.2
4937	ok	0.24	0.1	1.44e-02	5.7	5.7	2.5	2.5	-5.9	-13.5	-24.3	-2.21e-02	-0.1	-0.3
4938	ok	0.24	0.1	1.51e-02	5.7	5.7	2.5	2.5	-4.4	-18.6	-22.2	-5.12e-02	-0.1	-0.3
4939	ok	0.24	0.1	1.67e-02	5.7	5.7	2.5	2.5	-5.8	-19.7	-26.0	-1.88e-02	-0.1	-0.3
4940	ok	0.24	0.1	1.69e-02	5.7	5.7	2.5	2.5	-4.5	-22.5	-22.9	-4.77e-02	-0.1	-0.3
4941	ok	0.24	0.1	1.81e-02	5.7	5.7	2.5	2.5	-5.7	-23.6	-26.7	-1.54e-02	-0.1	-0.3
4942	ok	0.24	0.1	1.82e-02	5.7	5.7	2.5	2.5	-4.5	-25.4	-23.4	-4.20e-02	-0.1	-0.3
4943	ok	0.24	0.1	1.92e-02	5.7	5.7	2.5	2.5	-5.9	-26.5	-27.2	-3.78e-03	-0.1	-0.3
4944	ok	0.24	0.1	1.91e-02	5.7	5.7	2.5	2.5	-4.7	-27.6	-23.5	-3.03e-02	-0.1	-0.3
4945	ok	0.24	0.1	1.97e-02	5.7	5.7	2.5	2.5	-5.9	-28.2	-27.2	-6.96e-03	-0.1	-0.3
4946	ok	0.24	0.1	1.94e-02	5.7	5.7	2.5	2.5	-4.7	-27.8	-24.1	-4.51e-02	-0.1	-0.3
4947	ok	0.24	0.1	2.00e-02	5.7	5.7	2.5	2.5	-5.6	-28.5	-27.8	-2.39e-02	-0.1	-0.3
4948	ok	0.24	0.1	1.97e-02	5.7	5.7	2.5	2.5	-4.6	-27.9	-24.9	-6.57e-02	-0.1	-0.3
4949	ok	0.24	0.1	2.02e-02	5.7	5.7	2.5	2.5	-5.7	-28.2	-28.6	-2.59e-02	-0.1	-0.3
4950	ok	0.24	0.1	1.97e-02	5.7	5.7	2.5	2.5	-4.5	-26.9	-25.7	-6.87e-02	-0.1	-0.3
4951	ok	0.24	0.1	2.02e-02	5.7	5.7	2.5	2.5	-5.6	-27.2	-29.3	-2.62e-02	-0.1	-0.3

4952	ok	0.24	0.1	1.96e-02	5.7	5.7	2.5	2.5	-4.4	-25.4	-26.4	-6.58e-02	-0.1	-0.3
4953	ok	0.24	0.1	2.01e-02	5.7	5.7	2.5	2.5	-5.4	-25.9	-30.2	-3.61e-02	-0.1	-0.3
4954	ok	0.24	0.1	1.94e-02	5.7	5.7	2.5	2.5	-4.4	-23.5	-26.8	-4.39e-02	-0.1	-0.3
4955	ok	0.24	0.1	1.97e-02	5.7	5.7	2.5	2.5	-5.6	-24.1	-30.6	-1.09e-02	-0.1	-0.3
4956	ok	0.24	0.1	1.90e-02	5.7	5.7	2.5	2.5	-4.2	-21.5	-27.2	-4.75e-02	-0.1	-0.3
4957	ok	0.24	0.1	1.90e-02	5.7	5.7	2.5	2.5	-5.6	-21.8	-30.5	-9.09e-03	-0.1	-0.3
4958	ok	0.24	0.1	1.82e-02	5.7	5.7	2.5	2.5	-4.1	-18.8	-27.4	-5.47e-02	-0.1	-0.3
4959	ok	0.24	0.1	1.84e-02	5.7	5.7	2.5	2.5	-4.3	-19.0	-31.1	-3.14e-02	-0.1	-0.3
4960	ok	0.24	0.1	1.75e-02	5.7	5.7	2.5	2.5	-4.0	-16.1	-27.5	-9.10e-02	-0.1	-0.3
4961	ok	0.24	0.1	1.76e-02	5.7	5.7	2.5	2.5	-4.2	-13.0	31.7	-7.21e-02	-0.1	0.3
4962	ok	0.24	0.1	1.69e-02	5.7	5.7	2.5	2.5	-3.7	-12.8	28.0	-9.18e-02	-0.1	0.3
4963	ok	0.24	9.66e-02	1.78e-02	5.7	5.7	2.5	2.5	-4.4	-16.0	31.6	-6.39e-02	-0.1	0.3
4964	ok	0.24	0.1	1.76e-02	5.7	5.7	2.5	2.5	-3.9	-15.8	27.8	-8.46e-02	-0.1	0.3
4965	ok	0.24	0.1	1.84e-02	5.7	5.7	2.5	2.5	-4.4	-18.8	31.4	-5.77e-02	-0.1	0.3
4966	ok	0.24	0.1	1.83e-02	5.7	5.7	2.5	2.5	-4.0	-18.6	27.6	-4.99e-02	-0.1	0.3
4967	ok	0.24	0.1	1.92e-02	5.7	5.7	2.5	2.5	-5.6	-21.6	31.0	-8.18e-03	-0.1	0.3
4968	ok	0.24	0.1	1.90e-02	5.7	5.7	2.5	2.5	-3.7	-21.3	27.3	-2.98e-02	-0.1	0.3
4969	ok	0.24	0.1	1.98e-02	5.7	5.7	2.5	2.5	-5.9	-23.6	30.9	2.05e-03	-0.1	0.3
4970	ok	0.24	0.1	1.96e-02	5.7	5.7	2.5	2.5	-4.5	-23.4	27.0	-2.07e-02	-0.1	0.3
4971	ok	0.24	0.1	2.00e-02	5.7	5.7	2.5	2.5	-5.8	-23.1	27.3	3.06e-02	9.60e-02	0.3
4972	ok	0.24	0.1	1.98e-02	5.7	5.7	2.5	2.5	-4.5	-24.9	26.3	-2.21e-02	-0.1	0.3
4973	ok	0.24	0.1	2.01e-02	5.7	5.7	2.5	2.5	-6.1	-26.6	29.6	3.03e-05	-0.1	0.3
4974	ok	0.24	0.1	1.99e-02	5.7	5.7	2.5	2.5	-4.7	-26.4	25.5	-2.36e-02	-0.1	0.3
4975	ok	0.24	0.1	2.01e-02	5.7	5.7	2.5	2.5	-6.2	-27.7	28.7	1.33e-03	-0.1	0.3
4976	ok	0.24	0.1	1.99e-02	5.7	5.7	2.5	2.5	-4.8	-27.4	24.7	-2.25e-02	-0.1	0.3
4977	ok	0.24	0.1	1.99e-02	5.7	5.7	2.5	2.5	-6.2	-28.0	27.9	5.00e-03	-0.1	0.3
4978	ok	0.24	0.1	1.96e-02	5.7	5.7	2.5	2.5	-4.8	-27.9	24.0	-2.37e-02	-0.1	0.3
4979	ok	0.24	0.1	1.98e-02	5.7	5.7	2.5	2.5	-6.0	-28.0	27.6	9.58e-03	-0.1	0.3
4980	ok	0.24	0.1	1.90e-02	5.7	5.7	2.5	2.5	-3.9	-27.3	23.6	-1.90e-02	-0.1	0.3
4981	ok	0.24	0.1	1.91e-02	5.7	5.7	2.5	2.5	-6.2	-26.1	27.2	1.34e-02	-9.58e-02	0.3
4982	ok	0.24	0.1	1.84e-02	5.7	5.7	2.5	2.5	-4.7	-25.6	23.3	-2.45e-02	-0.1	0.3
4983	ok	0.24	0.1	1.82e-02	5.7	5.7	2.5	2.5	-6.1	-23.5	26.8	8.12e-03	-0.1	0.3
4984	ok	0.24	0.1	1.71e-02	5.7	5.7	2.5	2.5	-4.3	-22.6	22.9	-2.76e-02	-0.1	0.3
4985	ok	0.24	0.1	1.68e-02	5.7	5.7	2.5	2.5	-6.0	-19.7	26.1	-3.49e-03	-0.1	0.3
4986	ok	0.24	0.1	1.53e-02	5.7	5.7	2.5	2.5	-4.4	-18.8	22.2	-3.58e-02	-0.1	0.3
4987	ok	0.24	0.1	1.45e-02	5.7	5.7	2.5	2.5	-6.2	-13.6	24.4	-5.81e-03	-9.76e-02	0.3
4988	ok	0.24	0.1	1.24e-02	5.7	5.7	2.5	2.5	-4.8	-12.4	20.6	-5.44e-02	-0.1	0.2
4989	ok	0.24	9.91e-02	1.09e-02	5.7	5.7	2.5	2.5	-7.3	-7.1	18.9	-0.1	-5.33e-02	0.2
4990	ok	0.24	7.88e-02	8.91e-03	5.7	5.7	2.5	2.5	-11.5	-2.0	14.2	-0.5	-0.1	0.1

Nodo	**x/d**	**V N/M**	**ver. rid**	**Af pr-**	**Af pr+**	**Af sec-**	**Af sec+**	**N z**	**N o**	**N zo**	**M z**	**M o**	**M zo**
								-160.35	-29.34	-44.45	-1.96	-0.42	-0.38
	0.24	0.18	0.07	5.65	5.65	2.51	2.51	-3.71	-0.50	45.11	0.26	0.36	0.39

Nodo	**Stato**	**Max tau**	**Ver V pr**	**Ver V sec**	**Af V pr**	**Af V sec**	**V pr**	**V sec**
		daN/cm2					kN/ m	kN/ m
651	ok	1.94						
652	ok	0.41						
653	ok	0.99						
654	ok	0.39						
655	ok	0.95						
656	ok	0.42						
657	ok	0.96						
658	ok	0.43						
659	ok	0.96						
660	ok	0.43						
661	ok	0.98						
662	ok	0.43						
663	ok	0.98						
664	ok	0.43						
665	ok	0.98						
666	ok	0.44						
667	ok	0.98						
668	ok	0.44						
669	ok	0.98						
670	ok	0.44						
671	ok	0.97						
672	ok	0.44						
673	ok	0.98						
674	ok	0.44						
675	ok	0.97						
676	ok	0.44						
677	ok	0.97						
678	ok	0.44						
679	ok	0.97						
680	ok	0.44						
681	ok	0.96						

682	ok	0.44
683	ok	0.96
684	ok	0.44
685	ok	0.98
686	ok	0.44
687	ok	0.96
688	ok	0.44
689	ok	0.97
690	ok	0.44
691	ok	0.98
692	ok	0.43
693	ok	0.97
694	ok	0.43
695	ok	0.97
696	ok	0.43
697	ok	0.98
698	ok	0.43
699	ok	0.96
700	ok	0.43
701	ok	0.96
702	ok	0.42
703	ok	0.95
704	ok	0.39
705	ok	0.98
706	ok	0.41
707	ok	1.92
919	ok	1.06
920	ok	0.44
921	ok	0.53
922	ok	0.33
923	ok	0.48
924	ok	0.32
925	ok	0.48
926	ok	0.32
927	ok	0.48
928	ok	0.30
929	ok	0.49
930	ok	0.30
931	ok	0.47
932	ok	0.30
933	ok	0.47
934	ok	0.30
935	ok	0.47
936	ok	0.30
937	ok	0.47
938	ok	0.30
939	ok	0.46
940	ok	0.30
941	ok	0.47
942	ok	0.30
943	ok	0.45
944	ok	0.30
945	ok	0.45
946	ok	0.29
947	ok	0.44
948	ok	0.29
949	ok	0.44
950	ok	0.29
951	ok	0.45
952	ok	0.30
953	ok	0.46
954	ok	0.30
955	ok	0.46
956	ok	0.30
957	ok	0.46
958	ok	0.30
959	ok	0.46
960	ok	0.30
961	ok	0.46
962	ok	0.30
963	ok	0.47
964	ok	0.30
965	ok	0.48
966	ok	0.30
967	ok	0.47
968	ok	0.32
969	ok	0.48
970	ok	0.32
971	ok	0.48

972	ok	0.33
973	ok	0.52
974	ok	0.44
975	ok	1.05
1127	ok	0.43
1128	ok	0.22
1129	ok	0.11
1130	ok	0.13
1131	ok	0.09
1132	ok	0.14
1133	ok	0.10
1134	ok	0.14
1135	ok	0.10
1136	ok	0.14
1137	ok	0.10
1138	ok	0.13
1139	ok	0.10
1140	ok	0.13
1141	ok	0.10
1142	ok	0.13
1143	ok	0.10
1144	ok	0.13
1145	ok	0.10
1146	ok	0.13
1147	ok	0.10
1148	ok	0.14
1149	ok	0.10
1150	ok	0.13
1151	ok	0.10
1152	ok	0.13
1153	ok	0.10
1154	ok	0.13
1155	ok	0.10
1156	ok	0.12
1157	ok	0.10
1158	ok	0.12
1159	ok	0.10
1160	ok	0.13
1161	ok	0.10
1162	ok	0.14
1163	ok	0.10
1164	ok	0.13
1165	ok	0.10
1166	ok	0.13
1167	ok	0.10
1168	ok	0.13
1169	ok	0.10
1170	ok	0.13
1171	ok	0.09
1172	ok	0.13
1173	ok	0.10
1174	ok	0.14
1175	ok	0.10
1176	ok	0.14
1177	ok	0.10
1178	ok	0.14
1179	ok	0.09
1180	ok	0.13
1181	ok	0.11
1182	ok	0.21
1183	ok	0.43
1475	ok	0.50
1476	ok	0.22
1477	ok	0.26
1478	ok	0.14
1479	ok	0.24
1480	ok	0.14
1481	ok	0.23
1482	ok	0.14
1483	ok	0.23
1484	ok	0.14
1485	ok	0.24
1486	ok	0.14
1487	ok	0.22
1488	ok	0.14
1489	ok	0.22
1490	ok	0.14
1491	ok	0.22
1492	ok	0.14

1493	ok	0.22
1494	ok	0.14
1495	ok	0.22
1496	ok	0.14
1497	ok	0.23
1498	ok	0.14
1499	ok	0.21
1500	ok	0.14
1501	ok	0.21
1502	ok	0.14
1503	ok	0.20
1504	ok	0.14
1505	ok	0.20
1506	ok	0.14
1507	ok	0.21
1508	ok	0.14
1509	ok	0.23
1510	ok	0.14
1511	ok	0.21
1512	ok	0.14
1513	ok	0.21
1514	ok	0.14
1515	ok	0.21
1516	ok	0.14
1517	ok	0.21
1518	ok	0.14
1519	ok	0.21
1520	ok	0.14
1521	ok	0.24
1522	ok	0.14
1523	ok	0.22
1524	ok	0.14
1525	ok	0.23
1526	ok	0.14
1527	ok	0.23
1528	ok	0.14
1529	ok	0.25
1530	ok	0.22
1531	ok	0.50
1683	ok	0.40
1684	ok	0.14
1685	ok	0.13
1686	ok	0.14
1687	ok	0.12
1688	ok	0.13
1689	ok	0.12
1690	ok	0.13
1691	ok	0.12
1692	ok	0.14
1693	ok	0.13
1694	ok	0.14
1695	ok	0.11
1696	ok	0.13
1697	ok	0.11
1698	ok	0.13
1699	ok	0.11
1700	ok	0.13
1701	ok	0.11
1702	ok	0.13
1703	ok	0.11
1704	ok	0.13
1705	ok	0.12
1706	ok	0.13
1707	ok	0.11
1708	ok	0.12
1709	ok	0.11
1710	ok	0.12
1711	ok	0.10
1712	ok	0.12
1713	ok	0.10
1714	ok	0.12
1715	ok	0.11
1716	ok	0.13
1717	ok	0.12
1718	ok	0.13
1719	ok	0.11
1720	ok	0.13
1721	ok	0.11
1722	ok	0.13

1723	ok	0.11
1724	ok	0.13
1725	ok	0.11
1726	ok	0.13
1727	ok	0.11
1728	ok	0.14
1729	ok	0.13
1730	ok	0.14
1731	ok	0.12
1732	ok	0.13
1733	ok	0.12
1734	ok	0.13
1735	ok	0.12
1736	ok	0.14
1737	ok	0.12
1738	ok	0.14
1739	ok	0.40
1891	ok	0.41
1892	ok	0.09
1893	ok	0.06
1894	ok	0.05
1895	ok	0.05
1896	ok	0.04
1897	ok	0.05
1898	ok	0.04
1899	ok	0.05
1900	ok	0.04
1901	ok	0.05
1902	ok	0.04
1903	ok	0.05
1904	ok	0.04
1905	ok	0.05
1906	ok	0.04
1907	ok	0.05
1908	ok	0.04
1909	ok	0.05
1910	ok	0.04
1911	ok	0.04
1912	ok	0.04
1913	ok	0.04
1914	ok	0.04
1915	ok	0.04
1916	ok	0.04
1917	ok	0.05
1918	ok	0.04
1919	ok	0.05
1920	ok	0.04
1921	ok	0.05
1922	ok	0.04
1923	ok	0.04
1924	ok	0.04
1925	ok	0.04
1926	ok	0.04
1927	ok	0.04
1928	ok	0.04
1929	ok	0.05
1930	ok	0.04
1931	ok	0.05
1932	ok	0.04
1933	ok	0.05
1934	ok	0.04
1935	ok	0.05
1936	ok	0.04
1937	ok	0.05
1938	ok	0.04
1939	ok	0.05
1940	ok	0.04
1941	ok	0.05
1942	ok	0.04
1943	ok	0.05
1944	ok	0.04
1945	ok	0.06
1946	ok	0.09
1947	ok	0.41
2239	ok	0.46
2240	ok	0.11
2241	ok	0.20
2242	ok	0.10
2243	ok	0.18

2244	ok	0.10
2245	ok	0.17
2246	ok	0.09
2247	ok	0.16
2248	ok	0.10
2249	ok	0.18
2250	ok	0.09
2251	ok	0.15
2252	ok	0.09
2253	ok	0.15
2254	ok	0.09
2255	ok	0.16
2256	ok	0.09
2257	ok	0.15
2258	ok	0.08
2259	ok	0.15
2260	ok	0.09
2261	ok	0.17
2262	ok	0.09
2263	ok	0.15
2264	ok	0.06
2265	ok	0.14
2266	ok	0.05
2267	ok	0.09
2268	ok	0.08
2269	ok	0.16
2270	ok	0.09
2271	ok	0.15
2272	ok	0.09
2273	ok	0.18
2274	ok	0.08
2275	ok	0.13
2276	ok	0.08
2277	ok	0.14
2278	ok	0.08
2279	ok	0.14
2280	ok	0.08
2281	ok	0.14
2282	ok	0.08
2283	ok	0.14
2284	ok	0.09
2285	ok	0.19
2286	ok	0.09
2287	ok	0.14
2288	ok	0.08
2289	ok	0.15
2290	ok	0.09
2291	ok	0.17
2292	ok	0.09
2293	ok	0.18
2294	ok	0.10
2295	ok	0.47
2447	ok	0.39
2448	ok	0.11
2449	ok	0.11
2450	ok	0.10
2451	ok	0.11
2452	ok	0.10
2453	ok	0.10
2454	ok	0.10
2455	ok	0.10
2456	ok	0.10
2457	ok	0.12
2458	ok	0.10
2459	ok	0.09
2460	ok	0.09
2461	ok	0.09
2462	ok	0.09
2463	ok	0.09
2464	ok	0.09
2465	ok	0.09
2466	ok	0.09
2467	ok	0.10
2468	ok	0.10
2469	ok	0.11
2470	ok	0.10
2471	ok	0.11
2472	ok	0.14
2473	ok	0.26

2474	ok	0.14
2475	ok	0.07
2476	ok	0.08
2477	ok	0.09
2478	ok	0.09
2479	ok	0.09
2480	ok	0.10
2481	ok	0.12
2482	ok	0.09
2483	ok	0.08
2484	ok	0.08
2485	ok	0.08
2486	ok	0.08
2487	ok	0.09
2488	ok	0.08
2489	ok	0.09
2490	ok	0.08
2491	ok	0.09
2492	ok	0.10
2493	ok	0.12
2494	ok	0.10
2495	ok	0.09
2496	ok	0.09
2497	ok	0.09
2498	ok	0.09
2499	ok	0.10
2500	ok	0.09
2501	ok	0.10
2502	ok	0.10
2503	ok	0.39
2655	ok	0.42
2656	ok	0.08
2657	ok	0.09
2658	ok	0.07
2659	ok	0.07
2660	ok	0.06
2661	ok	0.06
2662	ok	0.06
2663	ok	0.06
2664	ok	0.06
2665	ok	0.06
2666	ok	0.06
2667	ok	0.06
2668	ok	0.05
2669	ok	0.06
2670	ok	0.05
2671	ok	0.06
2672	ok	0.05
2673	ok	0.06
2674	ok	0.05
2675	ok	0.06
2676	ok	0.06
2677	ok	0.06
2678	ok	0.07
2679	ok	0.10
2680	ok	0.19
2681	ok	0.44
2682	ok	0.19
2683	ok	0.14
2684	ok	0.09
2685	ok	0.09
2686	ok	0.06
2687	ok	0.06
2688	ok	0.06
2689	ok	0.06
2690	ok	0.07
2691	ok	0.07
2692	ok	0.05
2693	ok	0.06
2694	ok	0.05
2695	ok	0.06
2696	ok	0.05
2697	ok	0.06
2698	ok	0.05
2699	ok	0.07
2700	ok	0.06
2701	ok	0.06
2702	ok	0.07
2703	ok	0.07

2704	ok	0.05
2705	ok	0.06
2706	ok	0.06
2707	ok	0.06
2708	ok	0.06
2709	ok	0.08
2710	ok	0.10
2711	ok	0.41
3003	ok	0.45
3004	ok	0.09
3005	ok	0.11
3006	ok	0.08
3007	ok	0.11
3008	ok	0.07
3009	ok	0.10
3010	ok	0.07
3011	ok	0.09
3012	ok	0.07
3013	ok	0.11
3014	ok	0.07
3015	ok	0.08
3016	ok	0.07
3017	ok	0.08
3018	ok	0.07
3019	ok	0.08
3020	ok	0.06
3021	ok	0.08
3022	ok	0.06
3023	ok	0.07
3024	ok	0.06
3025	ok	0.09
3026	ok	0.06
3027	ok	0.08
3028	ok	0.09
3029	ok	0.36
3030	ok	0.09
3031	ok	0.10
3032	ok	0.07
3033	ok	0.11
3034	ok	0.06
3035	ok	0.06
3036	ok	0.07
3037	ok	0.10
3038	ok	0.09
3039	ok	0.09
3040	ok	0.10
3041	ok	0.10
3042	ok	0.11
3043	ok	0.11
3044	ok	0.11
3045	ok	0.10
3046	ok	0.11
3047	ok	0.10
3048	ok	0.09
3049	ok	0.11
3050	ok	0.10
3051	ok	0.11
3052	ok	0.11
3053	ok	0.13
3054	ok	0.12
3055	ok	0.13
3056	ok	0.12
3057	ok	0.12
3058	ok	0.12
3059	ok	0.45
3211	ok	0.38
3212	ok	0.08
3213	ok	0.08
3214	ok	0.06
3215	ok	0.07
3216	ok	0.07
3217	ok	0.07
3218	ok	0.06
3219	ok	0.07
3220	ok	0.07
3221	ok	0.07
3222	ok	0.06
3223	ok	0.06
3224	ok	0.06

3225	ok	0.07
3226	ok	0.06
3227	ok	0.07
3228	ok	0.06
3229	ok	0.06
3230	ok	0.05
3231	ok	0.06
3232	ok	0.06
3233	ok	0.06
3234	ok	0.05
3235	ok	0.06
3236	ok	0.07
3237	ok	0.05
3238	ok	0.07
3239	ok	0.04
3240	ok	0.06
3241	ok	0.08
3242	ok	0.05
3243	ok	0.05
3244	ok	0.06
3245	ok	0.06
3246	ok	0.08
3247	ok	0.08
3248	ok	0.09
3249	ok	0.08
3250	ok	0.09
3251	ok	0.08
3252	ok	0.09
3253	ok	0.08
3254	ok	0.09
3255	ok	0.08
3256	ok	0.08
3257	ok	0.07
3258	ok	0.09
3259	ok	0.09
3260	ok	0.10
3261	ok	0.08
3262	ok	0.10
3263	ok	0.09
3264	ok	0.10
3265	ok	0.09
3266	ok	0.09
3267	ok	0.38
3419	ok	0.44
3420	ok	0.09
3421	ok	0.09
3422	ok	0.08
3423	ok	0.07
3424	ok	0.07
3425	ok	0.07
3426	ok	0.07
3427	ok	0.07
3428	ok	0.07
3429	ok	0.07
3430	ok	0.06
3431	ok	0.07
3432	ok	0.06
3433	ok	0.06
3434	ok	0.06
3435	ok	0.06
3436	ok	0.06
3437	ok	0.07
3438	ok	0.06
3439	ok	0.07
3440	ok	0.07
3441	ok	0.07
3442	ok	0.07
3443	ok	0.07
3444	ok	0.07
3445	ok	0.07
3446	ok	0.07
3447	ok	0.08
3448	ok	0.06
3449	ok	0.06
3450	ok	0.06
3451	ok	0.07
3452	ok	0.07
3453	ok	0.07
3454	ok	0.06

3455	ok	0.10
3456	ok	0.06
3457	ok	0.09
3458	ok	0.06
3459	ok	0.09
3460	ok	0.06
3461	ok	0.09
3462	ok	0.06
3463	ok	0.09
3464	ok	0.07
3465	ok	0.06
3466	ok	0.06
3467	ok	0.10
3468	ok	0.06
3469	ok	0.05
3470	ok	0.05
3471	ok	0.06
3472	ok	0.06
3473	ok	0.07
3474	ok	0.09
3475	ok	0.45
3773	ok	0.44
3774	ok	0.08
3775	ok	0.08
3776	ok	0.05
3777	ok	0.06
3778	ok	0.05
3779	ok	0.06
3780	ok	0.05
3781	ok	0.06
3782	ok	0.05
3783	ok	0.06
3784	ok	0.05
3785	ok	0.06
3786	ok	0.05
3787	ok	0.06
3788	ok	0.05
3789	ok	0.06
3790	ok	0.04
3791	ok	0.06
3792	ok	0.04
3793	ok	0.06
3794	ok	0.04
3795	ok	0.06
3796	ok	0.05
3797	ok	0.06
3798	ok	0.05
3799	ok	0.07
3800	ok	0.05
3801	ok	0.07
3802	ok	0.05
3803	ok	0.06
3804	ok	0.04
3805	ok	0.06
3806	ok	0.05
3807	ok	0.08
3808	ok	0.07
3809	ok	0.19
3810	ok	0.07
3811	ok	0.21
3812	ok	0.07
3813	ok	0.22
3814	ok	0.08
3815	ok	0.21
3816	ok	0.07
3817	ok	0.19
3818	ok	0.08
3819	ok	0.08
3820	ok	0.07
3821	ok	0.19
3822	ok	0.08
3823	ok	0.07
3824	ok	0.05
3825	ok	0.06
3826	ok	0.05
3827	ok	0.06
3828	ok	0.08
3829	ok	0.45
4011	ok	0.26

4012	ok	0.07
4013	ok	0.06
4014	ok	0.03
4015	ok	0.05
4016	ok	0.04
4017	ok	0.05
4018	ok	0.03
4019	ok	0.04
4020	ok	0.03
4021	ok	0.05
4022	ok	0.04
4023	ok	0.04
4024	ok	0.04
4025	ok	0.04
4026	ok	0.04
4027	ok	0.04
4028	ok	0.04
4029	ok	0.04
4030	ok	0.03
4031	ok	0.03
4032	ok	0.03
4033	ok	0.04
4034	ok	0.03
4035	ok	0.03
4036	ok	0.03
4037	ok	0.04
4038	ok	0.03
4039	ok	0.04
4040	ok	0.03
4041	ok	0.04
4042	ok	0.03
4043	ok	0.04
4044	ok	0.03
4045	ok	0.05
4046	ok	0.06
4047	ok	0.19
4048	ok	0.09
4049	ok	0.20
4050	ok	0.10
4051	ok	0.20
4052	ok	0.10
4053	ok	0.20
4054	ok	0.09
4055	ok	0.21
4056	ok	0.07
4057	ok	0.05
4058	ok	0.07
4059	ok	0.22
4060	ok	0.07
4061	ok	0.04
4062	ok	0.04
4063	ok	0.05
4064	ok	0.04
4065	ok	0.06
4066	ok	0.07
4067	ok	0.25
4522	ok	0.31
4523	ok	0.12
4524	ok	0.07
4525	ok	0.08
4526	ok	0.10
4527	ok	0.08
4528	ok	0.11
4529	ok	0.08
4530	ok	0.11
4531	ok	0.08
4532	ok	0.11
4533	ok	0.08
4534	ok	0.11
4535	ok	0.08
4536	ok	0.11
4537	ok	0.08
4538	ok	0.10
4539	ok	0.07
4540	ok	0.09
4541	ok	0.07
4542	ok	0.09
4543	ok	0.07
4544	ok	0.08

4545	ok	0.06
4546	ok	0.07
4547	ok	0.06
4548	ok	0.07
4549	ok	0.06
4550	ok	0.06
4551	ok	0.05
4552	ok	0.07
4553	ok	0.06
4554	ok	0.07
4555	ok	0.06
4556	ok	0.08
4557	ok	0.07
4558	ok	0.10
4559	ok	0.09
4560	ok	0.12
4561	ok	0.10
4562	ok	0.13
4563	ok	0.10
4564	ok	0.12
4565	ok	0.09
4566	ok	0.11
4567	ok	0.08
4568	ok	0.11
4569	ok	0.08
4570	ok	0.11
4571	ok	0.08
4572	ok	0.11
4573	ok	0.08
4574	ok	0.10
4575	ok	0.07
4576	ok	0.07
4577	ok	0.12
4578	ok	0.31
4934	ok	0.46
4935	ok	0.34
4936	ok	0.34
4937	ok	0.37
4938	ok	0.38
4939	ok	0.38
4940	ok	0.39
4941	ok	0.38
4942	ok	0.40
4943	ok	0.39
4944	ok	0.39
4945	ok	0.38
4946	ok	0.40
4947	ok	0.40
4948	ok	0.41
4949	ok	0.40
4950	ok	0.41
4951	ok	0.40
4952	ok	0.41
4953	ok	0.40
4954	ok	0.41
4955	ok	0.41
4956	ok	0.39
4957	ok	0.40
4958	ok	0.41
4959	ok	0.41
4960	ok	0.41
4961	ok	0.41
4962	ok	0.41
4963	ok	0.41
4964	ok	0.41
4965	ok	0.40
4966	ok	0.41
4967	ok	0.40
4968	ok	0.40
4969	ok	0.41
4970	ok	0.41
4971	ok	0.41
4972	ok	0.41
4973	ok	0.41
4974	ok	0.40
4975	ok	0.40
4976	ok	0.40
4977	ok	0.40
4978	ok	0.39

4979	ok	0.38
4980	ok	0.38
4981	ok	0.39
4982	ok	0.39
4983	ok	0.38
4984	ok	0.38
4985	ok	0.37
4986	ok	0.37
4987	ok	0.36
4988	ok	0.33
4989	ok	0.34
4990	ok	0.46

Nodo	Max tau	Ver V pr	Ver V sec	Af V pr	Af V sec	V pr	V sec
	1.94						

Macro Guscio	Spessore	Id Materiale	Id Criterio	Progettazione
	cm			
1	40.00	1	2	Singolo elemento

Nodo	Stato	x/d	V N/M	ver. rid	Af pr-	Af pr+	Af sec-	Af sec+	N x	N y	N xy	M x	M y	M xy
									kN/ m	kN/ m	kN/ m	kN	kN	kN
1	ok	0.12	6.07e-02	3.23e-04	7.7	7.7	7.7	7.7	0.6	0.2	-6.23e-02	-3.6	-2.3	-2.5
2	ok	0.12	0.1	7.13e-04	7.7	7.7	7.7	7.7	1.0	2.4	0.9	4.8	12.5	-2.9
3	ok	0.12	9.71e-02	8.45e-04	7.7	7.7	7.7	7.7	2.1	-0.4	-0.2	8.1	0.3	2.3
4	ok	0.12	0.1	1.47e-03	7.7	7.7	7.7	7.7	0.8	-1.3	-1.6	12.7	-0.4	1.9
5	ok	0.12	0.2	2.00e-03	7.7	7.7	7.7	7.7	-5.98e-02	-1.7	-1.5	14.3	-0.4	1.3
6	ok	0.12	0.2	2.55e-03	7.7	7.7	7.7	7.7	-10.2	-1.5	-2.4	13.6	0.3	-2.1
7	ok	0.12	0.2	3.06e-03	7.7	7.7	7.7	7.7	-12.7	-1.4	-2.4	12.5	0.2	-3.2
8	ok	0.12	0.1	3.50e-03	7.7	7.7	7.7	7.7	0.4	-1.6	-1.5	11.3	-0.6	-2.7
9	ok	0.12	9.62e-02	3.89e-03	7.7	7.7	7.7	7.7	0.5	-1.5	-1.4	7.3	-0.6	-3.7
10	ok	0.12	8.15e-02	4.54e-03	7.7	7.7	7.7	7.7	3.1	0.5	-2.8	-4.0	-2.0	-4.6
11	ok	0.12	0.2	4.77e-03	7.7	7.7	7.7	7.7	-0.8	-2.0	-0.2	-18.8	-3.2	3.2
12	ok	0.12	0.3	3.37e-03	7.7	7.7	7.7	7.7	-0.6	-1.8	0.9	-22.7	-7.5	5.8
13	ok	0.12	0.2	5.50e-03	7.7	7.7	7.7	7.7	-10.8	-3.6	1.0	-16.6	-2.5	1.1
14	ok	0.12	0.1	5.30e-03	7.7	7.7	7.7	7.7	-30.1	1.7	3.1	-6.5	-1.7	6.5
15	ok	0.12	0.1	4.56e-03	7.7	7.7	7.7	7.7	-15.3	-2.4	0.6	4.3	-1.1	5.6
16	ok	0.12	0.1	4.23e-03	7.7	7.7	7.7	7.7	-14.3	-2.3	0.5	7.7	-1.2	4.8
17	ok	0.12	0.2	3.93e-03	7.7	7.7	7.7	7.7	-13.2	-1.8	0.4	9.6	-1.2	3.9
18	ok	0.12	0.2	3.64e-03	7.7	7.7	7.7	7.7	12.6	-1.6	-0.2	10.5	-1.1	-3.3
19	ok	0.12	0.1	3.35e-03	7.7	7.7	7.7	7.7	12.8	-1.0	-0.3	10.0	-1.0	-3.9
20	ok	0.12	0.1	3.06e-03	7.7	7.7	7.7	7.7	11.7	-1.0	-0.3	7.9	-1.0	-4.9
21	ok	0.12	0.1	2.77e-03	7.7	7.7	7.7	7.7	10.6	-1.0	-0.3	4.2	-1.0	-5.6
22	ok	0.12	0.1	2.49e-03	7.7	7.7	7.7	7.7	3.4	-0.9	-1.4	-6.7	-2.4	-6.1
23	ok	0.12	0.2	2.30e-03	7.7	7.7	7.7	7.7	3.7	-1.2	-0.2	-19.1	-3.2	3.3
24	ok	0.12	0.3	1.36e-03	7.7	7.7	7.7	7.7	4.0	-2.0	0.3	-24.1	-6.6	5.5
25	ok	0.12	0.2	2.12e-03	7.7	7.7	7.7	7.7	7.1	-0.3	-2.10e-02	-18.2	-3.1	-3.4
26	ok	0.12	0.1	2.08e-03	7.7	7.7	7.7	7.7	-9.8	0.7	2.6	-6.3	-1.6	6.9
27	ok	0.12	9.00e-02	1.26e-03	7.7	7.7	7.7	7.7	1.6	-1.7	0.4	4.0	-1.1	5.7
28	ok	0.12	0.1	8.15e-04	7.7	7.7	7.7	7.7	1.9	-1.6	0.3	7.6	-1.1	4.9
29	ok	0.12	0.1	4.74e-04	7.7	7.7	7.7	7.7	2.2	-1.6	0.2	9.6	-1.1	4.0
30	ok	0.12	0.1	2.92e-04	7.7	7.7	7.7	7.7	2.3	-1.8	-0.1	10.1	-1.2	-3.4
31	ok	0.12	0.1	4.34e-04	7.7	7.7	7.7	7.7	2.2	-1.6	-0.2	9.7	-1.1	-4.0
32	ok	0.12	0.1	7.66e-04	7.7	7.7	7.7	7.7	2.0	-1.6	-0.3	7.7	-1.1	-4.9
33	ok	0.12	8.95e-02	1.21e-03	7.7	7.7	7.7	7.7	1.6	-1.7	-0.4	4.0	-1.1	-5.6
34	ok	0.12	0.1	2.03e-03	7.7	7.7	7.7	7.7	-0.2	-1.1	-1.2	-7.1	-2.5	-6.2
35	ok	0.12	0.2	2.07e-03	7.7	7.7	7.7	7.7	7.2	-0.3	2.15e-02	-18.2	-3.1	3.4
36	ok	0.12	0.3	1.33e-03	7.7	7.7	7.7	7.7	4.0	-2.1	-0.3	-24.1	-6.6	-5.5
37	ok	0.12	0.2	2.26e-03	7.7	7.7	7.7	7.7	3.7	-1.1	0.2	-19.0	-3.2	-3.3
38	ok	0.12	0.1	2.46e-03	7.7	7.7	7.7	7.7	-9.5	-7.66e-02	1.9	-5.7	-1.4	6.8
39	ok	0.12	0.1	2.76e-03	7.7	7.7	7.7	7.7	10.6	-1.0	0.3	4.2	-1.0	5.6
40	ok	0.12	0.1	3.06e-03	7.7	7.7	7.7	7.7	11.8	-1.0	0.3	8.0	-1.0	4.9
41	ok	0.12	0.1	3.35e-03	7.7	7.7	7.7	7.7	12.9	-1.0	0.3	10.0	-1.0	4.0
42	ok	0.12	0.2	3.65e-03	7.7	7.7	7.7	7.7	12.6	-1.6	0.2	10.5	-1.1	3.3
43	ok	0.12	0.1	3.95e-03	7.7	7.7	7.7	7.7	-13.8	-2.3	-0.5	8.9	-1.3	-4.2
44	ok	0.12	0.1	4.25e-03	7.7	7.7	7.7	7.7	-14.2	-2.3	-0.5	7.7	-1.2	-4.8
45	ok	0.12	0.1	4.59e-03	7.7	7.7	7.7	7.7	-15.2	-2.4	-0.6	4.3	-1.1	-5.6
46	ok	0.12	0.1	5.33e-03	7.7	7.7	7.7	7.7	-15.9	-0.8	-1.8	-6.6	-2.5	-6.1
47	ok	0.12	0.2	5.55e-03	7.7	7.7	7.7	7.7	12.5	-4.45e-02	0.5	-15.0	-2.7	2.8
48	ok	0.12	0.3	3.39e-03	7.7	7.7	7.7	7.7	-0.6	-1.8	-0.9	-22.8	-7.5	-5.7
49	ok	0.12	0.2	4.80e-03	7.7	7.7	7.7	7.7	-0.8	-2.0	0.2	-18.7	-3.2	-3.3
50	ok	0.12	8.15e-02	4.57e-03	7.7	7.7	7.7	7.7	3.1	0.5	2.8	-4.0	-2.0	4.6
51	ok	0.12	9.61e-02	3.92e-03	7.7	7.7	7.7	7.7	0.5	-1.5	1.4	7.3	-0.6	3.7

52	ok	0.12	0.1	3.53e-03	7.7	7.7	7.7	7.7	0.4	-1.6	1.5	11.3	-0.6	2.7
53	ok	0.12	0.1	3.09e-03	7.7	7.7	7.7	7.7	-12.8	-1.4	2.4	12.4	0.2	3.1
54	ok	0.12	0.2	2.57e-03	7.7	7.7	7.7	7.7	-10.3	-1.5	2.4	13.6	0.3	2.1
55	ok	0.12	0.2	2.02e-03	7.7	7.7	7.7	7.7	-8.79e-02	-1.7	1.5	14.3	-0.4	-1.3
56	ok	0.12	0.1	1.48e-03	7.7	7.7	7.7	7.7	0.8	-1.3	1.6	12.6	-0.4	-1.9
57	ok	0.12	9.68e-02	8.62e-04	7.7	7.7	7.7	7.7	2.1	-0.4	0.3	8.1	0.4	-2.3
58	ok	0.12	0.1	7.05e-04	7.7	7.7	7.7	7.7	-0.4	-2.7	-0.7	-5.1	-9.0	-6.1
59	ok	0.12	6.05e-02	3.20e-04	7.7	7.7	7.7	7.7	-0.2	-1.1	0.4	-3.8	0.2	-2.7
60	ok	0.12	0.1	6.96e-04	7.7	7.7	7.7	7.7	1.3	-1.3	-0.9	2.7	-9.3	-2.0
61	ok	0.12	0.2	1.36e-03	7.7	7.7	7.7	7.7	-1.5	-3.6	-0.4	-10.6	-16.7	8.0
62	ok	0.12	0.2	1.28e-03	7.7	7.7	7.7	7.7	-4.3	-5.0	1.8	-7.3	-5.4	7.5
63	ok	0.12	0.1	1.51e-03	7.7	7.7	7.7	7.7	1.8	-0.3	-1.0	11.4	1.1	3.8
64	ok	0.12	0.1	2.02e-03	7.7	7.7	7.7	7.7	-6.4	5.2	-4.7	10.8	5.8	-2.0
65	ok	0.12	0.1	2.30e-03	7.7	7.7	7.7	7.7	-8.4	-1.2	-5.3	10.6	5.9	-3.2
66	ok	0.12	0.1	2.53e-03	7.7	7.7	7.7	7.7	-10.3	-0.7	-5.4	9.6	5.8	-4.3
67	ok	0.12	0.1	2.78e-03	7.7	7.7	7.7	7.7	-12.0	-0.5	-5.2	7.7	5.3	-5.4
68	ok	0.12	0.1	2.96e-03	7.7	7.7	7.7	7.7	-13.5	-0.5	-4.9	4.9	4.5	-6.2
69	ok	0.12	9.60e-02	3.01e-03	7.7	7.7	7.7	7.7	-1.4	4.3	-0.6	1.9	5.9	-4.1
70	ok	0.12	0.2	3.00e-03	7.7	7.7	7.7	7.7	1.2	-0.3	-1.0	-13.8	-8.9	-8.9
71	ok	0.12	0.4	3.39e-03	7.7	7.7	7.7	7.7	-11.5	-3.6	1.0	-33.0	-24.5	6.4
72	ok	0.12	0.2	3.46e-03	7.7	7.7	7.7	7.7	-20.3	2.8	2.4	-16.1	-7.3	9.4
73	ok	0.12	0.1	3.47e-03	7.7	7.7	7.7	7.7	-10.6	-4.6	2.3	-4.3	-5.1	7.7
74	ok	0.12	0.1	3.41e-03	7.7	7.7	7.7	7.7	10.8	4.9	-2.5	5.0	7.4	-3.0
75	ok	0.12	0.1	3.26e-03	7.7	7.7	7.7	7.7	11.0	5.1	-2.2	6.1	7.7	-3.3
76	ok	0.12	0.2	3.05e-03	7.7	7.7	7.7	7.7	18.3	0.1	-4.5	6.9	4.6	-5.8
77	ok	0.12	0.2	2.84e-03	7.7	7.7	7.7	7.7	17.5	0.2	-4.3	6.7	4.5	-6.7
78	ok	0.12	0.1	2.64e-03	7.7	7.7	7.7	7.7	-11.7	0.3	-4.2	5.9	4.3	-7.6
79	ok	0.12	0.1	2.44e-03	7.7	7.7	7.7	7.7	-10.5	0.5	-4.2	4.4	3.9	-8.3
80	ok	0.12	0.1	2.23e-03	7.7	7.7	7.7	7.7	-9.3	0.6	-4.2	1.7	3.2	-8.7
81	ok	0.12	0.1	2.04e-03	7.7	7.7	7.7	7.7	1.8	-4.0	-1.3	-4.3	-4.5	-7.8
82	ok	0.12	0.3	1.78e-03	7.7	7.7	7.7	7.7	2.2	-1.7	-0.3	-16.6	-10.4	-10.6
83	ok	0.12	0.4	1.52e-03	7.7	7.7	7.7	7.7	-4.1	-3.2	0.8	-36.2	-25.1	6.9
84	ok	0.12	0.3	1.34e-03	7.7	7.7	7.7	7.7	-7.8	2.1	2.3	-16.2	-7.0	9.9
85	ok	0.12	0.1	1.25e-03	7.7	7.7	7.7	7.7	-2.6	-4.6	1.3	-4.7	-4.9	7.8
86	ok	0.12	0.1	1.26e-03	7.7	7.7	7.7	7.7	-1.1	-4.5	0.7	1.6	-3.5	7.8
87	ok	0.12	0.1	1.06e-03	7.7	7.7	7.7	7.7	5.7	5.3	-1.3	5.7	7.2	-3.3
88	ok	0.12	0.1	9.26e-04	7.7	7.7	7.7	7.7	1.4	1.6	4.4	5.2	3.7	7.5
89	ok	0.12	0.1	8.84e-04	7.7	7.7	7.7	7.7	3.1	1.8	-4.6	6.0	3.9	-6.8
90	ok	0.12	0.1	9.24e-04	7.7	7.7	7.7	7.7	1.6	1.6	-4.4	5.2	3.7	-7.6
91	ok	0.12	0.1	1.05e-03	7.7	7.7	7.7	7.7	5.6	5.3	1.2	5.7	7.2	3.1
92	ok	0.12	0.1	1.24e-03	7.7	7.7	7.7	7.7	6.3	5.3	2.1	4.3	6.9	2.9
93	ok	0.12	0.1	1.24e-03	7.7	7.7	7.7	7.7	-2.5	-4.6	-1.3	-4.6	-4.9	-7.8
94	ok	0.12	0.3	1.31e-03	7.7	7.7	7.7	7.7	-3.8	-2.5	-0.5	-17.1	-10.8	-10.6
95	ok	0.12	0.4	1.50e-03	7.7	7.7	7.7	7.7	-3.9	-3.2	-0.7	-36.2	-25.1	-7.0
96	ok	0.12	0.3	1.77e-03	7.7	7.7	7.7	7.7	2.0	-1.1	2.1	-10.7	-8.6	7.2
97	ok	0.12	0.1	2.03e-03	7.7	7.7	7.7	7.7	1.8	-4.0	1.3	-4.3	-4.5	7.8
98	ok	0.12	0.1	2.23e-03	7.7	7.7	7.7	7.7	2.4	-4.2	1.2	3.0	-3.1	7.8
99	ok	0.12	0.1	2.44e-03	7.7	7.7	7.7	7.7	-10.6	0.4	4.2	4.4	3.9	8.2
100	ok	0.12	0.1	2.64e-03	7.7	7.7	7.7	7.7	-11.8	0.3	4.3	5.9	4.3	7.5
101	ok	0.12	0.2	2.85e-03	7.7	7.7	7.7	7.7	17.4	0.2	4.4	6.7	4.5	6.6
102	ok	0.12	0.2	3.07e-03	7.7	7.7	7.7	7.7	18.2	0.1	4.5	6.9	4.6	5.7
103	ok	0.12	0.1	3.28e-03	7.7	7.7	7.7	7.7	10.7	5.1	2.2	6.1	7.7	3.1
104	ok	0.12	0.1	3.44e-03	7.7	7.7	7.7	7.7	10.5	4.9	2.6	4.9	7.4	2.8
105	ok	0.12	0.1	3.50e-03	7.7	7.7	7.7	7.7	-10.6	-4.6	-2.3	-4.3	-5.0	-7.7
106	ok	0.12	0.2	3.50e-03	7.7	7.7	7.7	7.7	-11.5	-2.6	-1.2	-16.4	-10.8	-10.6
107	ok	0.12	0.4	3.43e-03	7.7	7.7	7.7	7.7	-11.5	-3.6	-1.0	-33.1	-24.4	-6.5
108	ok	0.12	0.2	3.03e-03	7.7	7.7	7.7	7.7	0.8	4.23e-02	2.7	-8.2	-7.4	5.4
109	ok	0.12	9.47e-02	3.03e-03	7.7	7.7	7.7	7.7	0.5	-4.2	2.4	-1.8	-3.3	5.7
110	ok	0.12	0.1	2.99e-03	7.7	7.7	7.7	7.7	-13.7	-0.5	4.9	4.8	4.5	6.1
111	ok	0.12	0.1	2.80e-03	7.7	7.7	7.7	7.7	-12.2	-0.5	5.2	7.7	5.3	5.3
112	ok	0.12	0.1	2.55e-03	7.7	7.7	7.7	7.7	-10.5	-0.8	5.3	9.5	5.8	4.3
113	ok	0.12	0.1	2.31e-03	7.7	7.7	7.7	7.7	-8.5	-1.2	5.2	10.6	5.9	3.1
114	ok	0.12	0.1	2.03e-03	7.7	7.7	7.7	7.7	-6.5	5.2	4.7	10.7	5.8	2.0
115	ok	0.12	0.1	1.50e-03	7.7	7.7	7.7	7.7	1.8	-0.3	1.0	11.3	1.1	-3.8
116	ok	0.12	0.2	1.28e-03	7.7	7.7	7.7	7.7	4.0	5.5	1.0	10.7	7.4	4.7
117	ok	0.12	0.2	1.36e-03	7.7	7.7	7.7	7.7	-1.5	-3.6	0.4	-10.7	-16.6	-8.1
118	ok	0.12	0.1	6.95e-04	7.7	7.7	7.7	7.7	1.3	-0.8	0.1	4.7	-4.02e-02	0.9
119	ok	0.12	0.2	1.89e-03	7.7	7.7	7.7	7.7	0.6	2.3	-0.7	2.3	15.9	-0.3
120	ok	0.12	0.2	2.37e-03	7.7	7.7	7.7	7.7	-1.6	-12.0	1.7	-3.6	-11.1	7.1
121	ok	0.12	0.2	2.67e-03	7.7	7.7	7.7	7.7	0.3	11.8	-3.6	5.4	17.0	0.3
122	ok	0.12	0.2	2.53e-03	7.7	7.7	7.7	7.7	-2.49e-02	12.2	-3.3	7.8	18.7	-0.9
123	ok	0.12	0.2	2.50e-03	7.7	7.7	7.7	7.7	-4.08e-03	11.9	-3.9	8.5	19.1	-1.7
124	ok	0.12	0.2	2.58e-03	7.7	7.7	7.7	7.7	0.1	8.8	-4.0	8.5	19.6	-2.5
125	ok	0.12	0.2	2.60e-03	7.7	7.7	7.7	7.7	0.2	8.8	-3.9	7.8	19.2	-3.1
126	ok	0.12	0.2	2.63e-03	7.7	7.7	7.7	7.7	0.5	8.6	-3.3	7.0	19.2	-3.5
127	ok	0.12	0.2	2.69e-03	7.7	7.7	7.7	7.7	0.6	8.3	-2.3	5.8	18.4	-4.2
128	ok	0.12	0.2	2.84e-03	7.7	7.7	7.7	7.7	0.8	7.8	-1.4	3.7	17.8	-4.6
129	ok	0.12	0.2	2.77e-03	7.7	7.7	7.7	7.7	2.0	8.0	-2.5	1.4	16.7	-5.2
130	ok	0.12	0.2	2.55e-03	7.7	7.7	7.7	7.7	-1.7	-6.3	2.4	-15.1	-10.3	3.5

131	ok	0.12	0.2	2.84e-03	7.7	7.7	7.7	7.7	-0.5	-6.6	3.2	-9.9	-9.5	7.8
132	ok	0.12	0.2	2.93e-03	7.7	7.7	7.7	7.7	-0.3	-7.1	2.9	-6.0	-10.8	8.2
133	ok	0.12	0.2	2.81e-03	7.7	7.7	7.7	7.7	2.4	8.1	-4.0	6.5	17.9	-2.3
134	ok	0.12	0.2	2.78e-03	7.7	7.7	7.7	7.7	2.8	8.3	-3.6	6.8	18.4	-2.9
135	ok	0.12	0.2	2.70e-03	7.7	7.7	7.7	7.7	3.2	8.3	-3.2	6.9	18.2	-3.5
136	ok	0.12	0.2	2.60e-03	7.7	7.7	7.7	7.7	3.5	8.3	-2.6	6.8	18.4	-4.1
137	ok	0.12	0.2	2.49e-03	7.7	7.7	7.7	7.7	3.7	8.3	-2.1	6.2	17.9	-4.6
138	ok	0.12	0.2	2.36e-03	7.7	7.7	7.7	7.7	3.8	8.2	-1.6	5.6	17.9	-4.9
139	ok	0.12	0.2	2.24e-03	7.7	7.7	7.7	7.7	3.9	8.0	-1.2	4.5	17.1	-5.5
140	ok	0.12	0.2	2.12e-03	7.7	7.7	7.7	7.7	4.0	7.7	-1.4	1.5	16.4	-5.9
141	ok	0.12	0.2	1.99e-03	7.7	7.7	7.7	7.7	2.5	-6.1	-2.5	-9.9	-8.3	-7.8
142	ok	0.12	0.2	1.99e-03	7.7	7.7	7.7	7.7	-2.0	-5.5	0.7	-15.3	-9.6	3.2
143	ok	0.12	0.2	1.94e-03	7.7	7.7	7.7	7.7	1.6	-6.4	2.4	-10.4	-8.9	7.7
144	ok	0.12	0.2	1.86e-03	7.7	7.7	7.7	7.7	1.5	-6.6	2.2	-6.1	-10.1	8.3
145	ok	0.12	0.2	1.74e-03	7.7	7.7	7.7	7.7	4.0	7.6	-3.29e-02	4.0	16.1	5.3
146	ok	0.12	0.2	1.66e-03	7.7	7.7	7.7	7.7	4.1	7.8	0.3	5.2	16.9	4.7
147	ok	0.12	0.2	1.54e-03	7.7	7.7	7.7	7.7	4.8	7.9	0.9	5.9	17.0	4.4
148	ok	0.12	0.2	1.49e-03	7.7	7.7	7.7	7.7	5.4	8.0	-1.3	6.5	17.4	-4.1
149	ok	0.12	0.2	1.53e-03	7.7	7.7	7.7	7.7	3.5	7.9	-0.7	5.9	17.0	-4.4
150	ok	0.12	0.2	1.66e-03	7.7	7.7	7.7	7.7	4.0	7.8	-0.3	5.2	16.9	-4.9
151	ok	0.12	0.2	1.73e-03	7.7	7.7	7.7	7.7	4.0	7.6	4.30e-02	4.0	16.1	-5.4
152	ok	0.12	0.2	1.86e-03	7.7	7.7	7.7	7.7	1.5	-6.7	-2.2	-6.1	-10.1	-8.3
153	ok	0.12	0.2	1.94e-03	7.7	7.7	7.7	7.7	1.7	-6.4	-2.4	-10.3	-8.9	-7.7
154	ok	0.12	0.2	2.00e-03	7.7	7.7	7.7	7.7	-1.9	-5.5	-0.7	-15.2	-9.6	-3.2
155	ok	0.12	0.2	2.00e-03	7.7	7.7	7.7	7.7	2.5	-6.1	2.5	-9.9	-8.3	7.7
156	ok	0.12	0.2	2.12e-03	7.7	7.7	7.7	7.7	3.9	7.7	1.4	1.5	16.4	5.8
157	ok	0.12	0.2	2.25e-03	7.7	7.7	7.7	7.7	3.8	8.0	1.3	4.5	17.1	5.3
158	ok	0.12	0.2	2.37e-03	7.7	7.7	7.7	7.7	3.7	8.2	1.6	5.6	17.9	4.7
159	ok	0.12	0.2	2.50e-03	7.7	7.7	7.7	7.7	3.5	8.2	2.2	6.2	17.9	4.4
160	ok	0.12	0.2	2.61e-03	7.7	7.7	7.7	7.7	3.3	8.3	2.6	6.8	18.4	3.9
161	ok	0.12	0.2	2.71e-03	7.7	7.7	7.7	7.7	2.9	8.3	3.2	6.9	18.2	3.3
162	ok	0.12	0.2	2.79e-03	7.7	7.7	7.7	7.7	2.6	8.2	3.6	6.8	18.4	2.8
163	ok	0.12	0.2	2.83e-03	7.7	7.7	7.7	7.7	2.2	8.0	4.0	6.5	17.9	2.1
164	ok	0.12	0.2	2.95e-03	7.7	7.7	7.7	7.7	-0.3	-7.1	-2.9	-5.9	-10.8	-8.2
165	ok	0.12	0.2	2.86e-03	7.7	7.7	7.7	7.7	-0.5	-6.5	-3.2	-9.9	-9.5	-7.8
166	ok	0.12	0.2	2.57e-03	7.7	7.7	7.7	7.7	-1.7	-6.2	-2.4	-15.0	-10.2	-3.6
167	ok	0.12	0.2	2.78e-03	7.7	7.7	7.7	7.7	-1.6	-6.7	-2.7	-11.2	-9.4	0.4
168	ok	0.12	0.2	2.85e-03	7.7	7.7	7.7	7.7	0.6	7.8	1.4	3.7	17.8	4.5
169	ok	0.12	0.2	2.70e-03	7.7	7.7	7.7	7.7	0.3	8.3	2.3	5.8	18.4	4.0
170	ok	0.12	0.2	2.64e-03	7.7	7.7	7.7	7.7	0.3	8.6	3.2	6.9	19.2	3.4
171	ok	0.12	0.2	2.60e-03	7.7	7.7	7.7	7.7	1.06e-02	8.7	3.8	7.7	19.1	3.0
172	ok	0.12	0.2	2.58e-03	7.7	7.7	7.7	7.7	-4.04e-02	8.7	3.9	8.4	19.5	2.4
173	ok	0.12	0.2	2.48e-03	7.7	7.7	7.7	7.7	-0.1	11.8	3.8	8.4	19.0	1.6
174	ok	0.12	0.2	2.53e-03	7.7	7.7	7.7	7.7	-0.1	12.1	3.1	7.7	18.6	0.8
175	ok	0.12	0.2	2.67e-03	7.7	7.7	7.7	7.7	0.3	11.7	3.5	5.3	17.0	-0.3
176	ok	0.12	0.2	2.37e-03	7.7	7.7	7.7	7.7	-1.5	-12.0	-1.7	-3.6	-11.0	-7.1
177	ok	0.12	0.2	1.89e-03	7.7	7.7	7.7	7.7	-5.07e-02	-4.5	-0.3	-2.3	-9.5	-2.4
178	ok	0.12	0.4	3.32e-03	7.7	7.7	7.7	7.7	-0.5	11.3	-0.7	1.9	34.8	-0.5
179	ok	0.12	0.4	3.99e-03	7.7	7.7	7.7	7.7	-0.2	17.8	-4.5	4.6	32.6	0.4
180	ok	0.12	0.4	3.89e-03	7.7	7.7	7.7	7.7	6.86e-02	17.9	-6.0	7.4	33.1	0.5
181	ok	0.12	0.4	3.50e-03	7.7	7.7	7.7	7.7	0.6	17.0	-6.3	8.8	31.8	-0.7
182	ok	0.12	0.4	3.36e-03	7.7	7.7	7.7	7.7	0.7	16.1	-5.8	9.7	32.7	-1.6
183	ok	0.12	0.4	3.07e-03	7.7	7.7	7.7	7.7	1.2	12.0	-5.8	9.6	31.8	-2.3
184	ok	0.12	0.4	2.94e-03	7.7	7.7	7.7	7.7	1.5	12.1	-5.5	9.3	32.5	-3.3
185	ok	0.12	0.4	2.81e-03	7.7	7.7	7.7	7.7	2.4	12.0	-4.8	8.6	31.4	-3.8
186	ok	0.12	0.4	2.77e-03	7.7	7.7	7.7	7.7	2.7	11.8	-4.5	7.6	31.9	-4.2
187	ok	0.12	0.4	2.75e-03	7.7	7.7	7.7	7.7	3.1	11.5	-4.2	6.2	30.8	-4.8
188	ok	0.12	0.4	2.76e-03	7.7	7.7	7.7	7.7	3.3	11.6	-4.3	4.1	31.9	-4.3
189	ok	0.12	0.4	2.71e-03	7.7	7.7	7.7	7.7	4.0	12.4	-5.2	3.3	30.5	-2.9
190	ok	0.12	0.4	2.73e-03	7.7	7.7	7.7	7.7	4.0	11.5	-5.2	4.7	31.2	-1.4
191	ok	0.12	0.3	2.80e-03	7.7	7.7	7.7	7.7	4.4	11.2	-5.4	6.8	29.8	-1.3
192	ok	0.12	0.4	2.86e-03	7.7	7.7	7.7	7.7	4.8	11.3	-5.1	7.9	30.5	-2.3
193	ok	0.12	0.3	2.84e-03	7.7	7.7	7.7	7.7	5.1	11.4	-4.7	8.2	29.6	-2.7
194	ok	0.12	0.4	2.83e-03	7.7	7.7	7.7	7.7	5.2	11.3	-4.3	8.4	30.4	-3.6
195	ok	0.12	0.3	2.75e-03	7.7	7.7	7.7	7.7	5.5	11.3	-3.5	8.1	29.4	-4.0
196	ok	0.12	0.4	2.67e-03	7.7	7.7	7.7	7.7	5.6	11.3	-3.0	7.7	30.1	-4.8
197	ok	0.12	0.3	2.57e-03	7.7	7.7	7.7	7.7	6.0	11.3	-2.7	7.2	29.1	-5.2
198	ok	0.12	0.4	2.50e-03	7.7	7.7	7.7	7.7	6.2	11.2	-2.5	6.3	29.6	-5.5
199	ok	0.12	0.3	2.40e-03	7.7	7.7	7.7	7.7	6.3	11.0	-2.3	5.0	28.8	-5.8
200	ok	0.12	0.4	2.34e-03	7.7	7.7	7.7	7.7	6.3	11.1	-2.5	2.9	29.9	-5.1
201	ok	0.12	0.3	2.31e-03	7.7	7.7	7.7	7.7	6.8	11.8	-3.7	2.2	28.7	-3.4
202	ok	0.12	0.3	2.20e-03	7.7	7.7	7.7	7.7	6.2	10.6	1.0	2.3	28.5	4.8
203	ok	0.12	0.3	2.19e-03	7.7	7.7	7.7	7.7	6.6	10.5	0.6	4.4	27.1	5.6
204	ok	0.12	0.3	2.20e-03	7.7	7.7	7.7	7.7	6.7	10.7	0.8	5.7	27.9	5.3
205	ok	0.12	0.3	2.11e-03	7.7	7.7	7.7	7.7	6.9	10.8	1.0	6.6	27.4	4.9
206	ok	0.12	0.3	2.09e-03	7.7	7.7	7.7	7.7	6.8	10.7	1.4	7.2	28.4	4.6
207	ok	0.12	0.3	2.03e-03	7.7	7.7	7.7	7.7	7.0	10.8	-1.9	7.4	27.7	-4.0
208	ok	0.12	0.3	2.09e-03	7.7	7.7	7.7	7.7	6.8	10.7	-1.4	7.2	28.4	-4.8
209	ok	0.12	0.3	2.11e-03	7.7	7.7	7.7	7.7	6.9	10.7	-1.0	6.7	27.4	-5.1

210	ok	0.12	0.3	2.21e-03	7.7	7.7	7.7	7.7	6.7	10.6	-0.8	5.8	27.9	-5.4
211	ok	0.12	0.3	2.20e-03	7.7	7.7	7.7	7.7	6.6	10.4	-0.6	4.5	27.1	-5.8
212	ok	0.12	0.3	2.23e-03	7.7	7.7	7.7	7.7	6.2	10.5	-0.8	2.3	28.5	-5.0
213	ok	0.12	0.3	2.32e-03	7.7	7.7	7.7	7.7	6.7	11.7	2.4	1.4	28.5	2.9
214	ok	0.12	0.4	2.36e-03	7.7	7.7	7.7	7.7	6.2	11.0	2.6	2.9	29.9	4.9
215	ok	0.12	0.3	2.42e-03	7.7	7.7	7.7	7.7	6.2	10.9	2.4	5.0	28.8	5.7
216	ok	0.12	0.4	2.51e-03	7.7	7.7	7.7	7.7	6.0	11.1	2.6	6.3	29.7	5.3
217	ok	0.12	0.3	2.58e-03	7.7	7.7	7.7	7.7	5.8	11.2	2.8	7.2	29.1	5.0
218	ok	0.12	0.4	2.69e-03	7.7	7.7	7.7	7.7	5.4	11.2	3.0	7.7	30.1	4.6
219	ok	0.12	0.3	2.77e-03	7.7	7.7	7.7	7.7	5.3	11.3	3.4	8.0	29.4	3.8
220	ok	0.12	0.4	2.85e-03	7.7	7.7	7.7	7.7	5.0	11.3	4.4	8.4	30.4	3.4
221	ok	0.12	0.3	2.86e-03	7.7	7.7	7.7	7.7	4.8	11.3	4.8	8.2	29.6	2.6
222	ok	0.12	0.4	2.87e-03	7.7	7.7	7.7	7.7	4.5	11.3	5.1	7.9	30.5	2.1
223	ok	0.12	0.3	2.82e-03	7.7	7.7	7.7	7.7	4.2	11.1	5.5	6.7	29.8	1.2
224	ok	0.12	0.4	2.74e-03	7.7	7.7	7.7	7.7	3.7	11.5	5.2	4.7	31.2	1.3
225	ok	0.12	0.4	2.72e-03	7.7	7.7	7.7	7.7	3.8	12.4	5.2	3.3	30.5	2.7
226	ok	0.12	0.4	2.77e-03	7.7	7.7	7.7	7.7	3.0	11.6	4.3	4.1	31.9	4.2
227	ok	0.12	0.4	2.76e-03	7.7	7.7	7.7	7.7	2.9	11.5	4.1	6.2	30.8	4.7
228	ok	0.12	0.4	2.78e-03	7.7	7.7	7.7	7.7	2.5	11.8	4.4	7.6	31.9	4.1
229	ok	0.12	0.4	2.81e-03	7.7	7.7	7.7	7.7	2.2	12.0	4.7	8.5	31.3	3.7
230	ok	0.12	0.4	2.94e-03	7.7	7.7	7.7	7.7	1.3	12.0	5.3	9.3	32.4	3.2
231	ok	0.12	0.4	3.06e-03	7.7	7.7	7.7	7.7	1.0	12.0	5.7	9.5	31.7	2.2
232	ok	0.12	0.4	3.35e-03	7.7	7.7	7.7	7.7	0.5	16.1	5.7	9.6	32.7	1.6
233	ok	0.12	0.4	3.50e-03	7.7	7.7	7.7	7.7	0.5	16.9	6.1	8.7	31.7	0.6
234	ok	0.12	0.4	3.90e-03	7.7	7.7	7.7	7.7	1.11e-03	17.7	5.9	7.3	33.0	-0.5
235	ok	0.12	0.4	3.99e-03	7.7	7.7	7.7	7.7	-0.2	17.6	4.4	4.6	32.5	-0.5
236	ok	0.12	0.4	3.31e-03	7.7	7.7	7.7	7.7	-0.4	11.1	0.7	1.9	34.7	0.5
237	ok	0.12	0.5	4.59e-03	7.7	7.7	7.7	7.7	-5.2	6.2	1.5	2.8	45.7	-3.8
238	ok	0.12	0.6	7.71e-03	7.7	7.7	7.7	7.7	2.5	40.5	-14.8	7.6	47.9	-0.3
239	ok	0.12	0.5	4.54e-03	7.7	7.7	7.7	7.7	-1.8	10.3	-4.0	8.9	45.5	-0.7
240	ok	0.12	0.5	6.27e-03	7.7	7.7	7.7	7.7	3.7	33.3	-1.6	10.0	45.2	-1.5
241	ok	0.12	0.5	3.82e-03	7.7	7.7	7.7	7.7	-9.47e-02	8.6	-3.8	10.6	44.1	-1.9
242	ok	0.12	0.5	4.96e-03	7.7	7.7	7.7	7.7	5.2	30.8	-1.5	11.3	44.4	-3.0
243	ok	0.12	0.5	3.39e-03	7.7	7.7	7.7	7.7	1.1	4.7	-2.8	10.3	43.2	-3.4
244	ok	0.12	0.5	4.49e-03	7.7	7.7	7.7	7.7	6.4	26.2	-0.7	10.4	43.5	-4.4
245	ok	0.12	0.5	3.11e-03	7.7	7.7	7.7	7.7	2.3	5.1	-1.9	9.0	42.5	-4.6
246	ok	0.12	0.5	4.09e-03	7.7	7.7	7.7	7.7	7.3	25.9	-0.3	8.4	43.0	-4.7
247	ok	0.12	0.5	3.25e-03	7.7	7.7	7.7	7.7	2.1	4.0	-1.4	7.4	42.4	-4.3
248	ok	0.12	0.5	4.73e-03	7.7	7.7	7.7	7.7	9.0	29.6	1.1	7.6	44.2	-3.7
249	ok	0.12	0.5	3.13e-03	7.7	7.7	7.7	7.7	1.0	-3.8	-1.4	-10.9	-37.9	5.3
250	ok	0.12	0.5	4.15e-03	7.7	7.7	7.7	7.7	-1.5	-21.6	0.4	-9.1	-37.2	6.4
251	ok	0.12	0.4	3.33e-03	7.7	7.7	7.7	7.7	2.3	-6.1	-2.6	-7.9	-38.6	6.7
252	ok	0.12	0.5	4.37e-03	7.7	7.7	7.7	7.7	9.6	25.2	-0.2	9.8	40.7	-3.4
253	ok	0.12	0.4	3.37e-03	7.7	7.7	7.7	7.7	4.8	3.7	-1.7	8.9	39.7	-3.6
254	ok	0.12	0.5	4.45e-03	7.7	7.7	7.7	7.7	10.1	25.1	1.1	9.7	40.4	-4.6
255	ok	0.12	0.4	3.23e-03	7.7	7.7	7.7	7.7	5.4	3.8	-0.6	8.8	39.4	-4.8
256	ok	0.12	0.5	4.32e-03	7.7	7.7	7.7	7.7	10.4	25.0	1.8	9.0	40.1	-5.6
257	ok	0.12	0.4	3.01e-03	7.7	7.7	7.7	7.7	6.0	4.4	-4.18e-03	7.8	39.3	-5.6
258	ok	0.12	0.5	4.07e-03	7.7	7.7	7.7	7.7	10.7	24.8	1.9	7.2	40.0	-5.6
259	ok	0.12	0.4	3.04e-03	7.7	7.7	7.7	7.7	5.3	3.7	0.4	6.3	39.5	-5.0
260	ok	0.12	0.5	4.61e-03	7.7	7.7	7.7	7.7	11.9	28.4	3.1	6.5	41.5	-4.2
261	ok	0.12	0.4	2.79e-03	7.7	7.7	7.7	7.7	2.9	-3.8	-2.5	-10.6	-35.8	5.4
262	ok	0.12	0.5	3.98e-03	7.7	7.7	7.7	7.7	0.3	-20.8	-0.5	-8.7	-34.6	6.6
263	ok	0.12	0.4	2.86e-03	7.7	7.7	7.7	7.7	3.6	-6.0	-2.9	-7.5	-36.1	6.9
264	ok	0.12	0.5	4.06e-03	7.7	7.7	7.7	7.7	11.5	23.9	-3.6	8.2	37.7	5.4
265	ok	0.12	0.4	2.74e-03	7.7	7.7	7.7	7.7	7.0	3.5	-1.1	8.1	36.9	4.6
266	ok	0.12	0.5	4.04e-03	7.7	7.7	7.7	7.7	11.6	24.0	2.8	9.1	37.9	-4.6
267	ok	0.12	0.4	2.69e-03	7.7	7.7	7.7	7.7	7.0	3.5	1.1	8.1	37.0	-4.8
268	ok	0.12	0.5	4.08e-03	7.7	7.7	7.7	7.7	11.5	23.9	3.6	8.3	37.7	-5.6
269	ok	0.12	0.4	2.87e-03	7.7	7.7	7.7	7.7	3.5	-5.8	-7.1	-7.5	-36.0	-6.2
270	ok	0.12	0.5	4.01e-03	7.7	7.7	7.7	7.7	11.2	23.7	3.8	6.5	37.8	-5.6
271	ok	0.12	0.4	2.81e-03	7.7	7.7	7.7	7.7	2.9	-3.8	2.6	-10.6	-35.8	-5.4
272	ok	0.12	0.5	4.62e-03	7.7	7.7	7.7	7.7	11.8	28.3	-3.0	6.5	41.6	4.0
273	ok	0.12	0.4	3.06e-03	7.7	7.7	7.7	7.7	5.2	3.6	-0.3	6.4	39.6	4.8
274	ok	0.12	0.5	4.08e-03	7.7	7.7	7.7	7.7	10.5	24.7	-1.7	7.2	40.0	5.5
275	ok	0.12	0.4	3.03e-03	7.7	7.7	7.7	7.7	5.8	4.4	0.1	7.8	39.3	5.4
276	ok	0.12	0.5	4.32e-03	7.7	7.7	7.7	7.7	10.2	24.9	-1.7	9.0	40.1	5.4
277	ok	0.12	0.4	3.25e-03	7.7	7.7	7.7	7.7	5.2	3.8	0.7	8.8	39.5	4.6
278	ok	0.12	0.5	4.49e-03	7.7	7.7	7.7	7.7	9.9	25.1	-1.3	9.8	40.4	4.5
279	ok	0.12	0.4	3.40e-03	7.7	7.7	7.7	7.7	4.6	3.7	1.4	8.9	39.7	3.5
280	ok	0.12	0.5	4.37e-03	7.7	7.7	7.7	7.7	9.4	25.2	0.2	9.8	40.8	3.3
281	ok	0.12	0.4	3.34e-03	7.7	7.7	7.7	7.7	4.1	4.1	2.7	8.3	40.2	2.6
282	ok	0.12	0.5	4.15e-03	7.7	7.7	7.7	7.7	9.1	25.2	1.0	8.7	41.5	2.4
283	ok	0.12	0.5	3.14e-03	7.7	7.7	7.7	7.7	0.9	-3.7	1.5	-10.9	-37.8	-5.4
284	ok	0.12	0.5	4.72e-03	7.7	7.7	7.7	7.7	8.8	29.5	-1.1	7.6	44.3	3.6
285	ok	0.12	0.5	3.25e-03	7.7	7.7	7.7	7.7	1.8	4.1	1.4	7.4	42.4	4.2
286	ok	0.12	0.5	4.08e-03	7.7	7.7	7.7	7.7	7.1	25.8	0.3	8.4	43.0	4.6
287	ok	0.12	0.5	3.10e-03	7.7	7.7	7.7	7.7	2.1	5.1	1.8	9.0	42.5	4.4
288	ok	0.12	0.5	4.47e-03	7.7	7.7	7.7	7.7	6.2	26.2	0.6	10.3	43.5	4.2

289	ok	0.12	0.5	3.38e-03	7.7	7.7	7.7	7.7	0.9	4.7	2.6	10.3	43.2	3.3
290	ok	0.12	0.5	4.94e-03	7.7	7.7	7.7	7.7	5.0	30.7	1.3	11.3	44.3	2.9
291	ok	0.12	0.5	3.83e-03	7.7	7.7	7.7	7.7	-0.2	8.5	3.6	10.5	44.1	1.8
292	ok	0.12	0.5	6.25e-03	7.7	7.7	7.7	7.7	3.6	33.1	1.5	10.0	45.1	1.4
293	ok	0.12	0.5	4.55e-03	7.7	7.7	7.7	7.7	-1.9	10.1	3.8	8.8	45.4	0.6
294	ok	0.12	0.6	7.67e-03	7.7	7.7	7.7	7.7	2.4	40.1	14.6	7.6	47.8	0.3
295	ok	0.12	0.5	4.61e-03	7.7	7.7	7.7	7.7	-5.2	5.9	-1.5	2.8	45.6	3.8
296	ok	0.12	0.5	5.39e-03	7.7	7.7	7.7	7.7	2.4	-12.5	-3.3	-7.2	-45.7	4.2
297	ok	0.12	0.6	9.51e-03	7.7	7.7	7.7	7.7	-0.7	-31.2	29.1	-13.5	-58.7	6.2
298	ok	0.12	0.6	4.22e-03	7.7	7.7	7.7	7.7	0.8	8.1	-0.9	-6.2	-49.5	6.7
299	ok	0.12	0.6	1.29e-02	7.7	7.7	7.7	7.7	-8.1	-69.0	27.6	-14.6	-59.6	5.2
300	ok	0.12	0.6	4.18e-03	7.7	7.7	7.7	7.7	2.2	21.3	-1.8	-6.9	-51.4	4.6
301	ok	0.12	0.6	1.25e-02	7.7	7.7	7.7	7.7	-6.8	-67.4	-9.1	-14.3	-61.0	6.1
302	ok	0.12	0.6	4.05e-03	7.7	7.7	7.7	7.7	3.3	25.9	-3.1	-6.7	-51.8	3.0
303	ok	0.12	0.6	1.11e-02	7.7	7.7	7.7	7.7	-5.8	-58.9	-10.4	-14.2	-60.2	4.7
304	ok	0.12	0.6	3.66e-03	7.7	7.7	7.7	7.7	4.6	25.8	-4.1	-7.4	-50.3	1.9
305	ok	0.12	0.6	1.01e-02	7.7	7.7	7.7	7.7	-4.4	-52.7	-11.2	-14.5	-58.0	4.4
306	ok	0.12	0.6	2.93e-03	7.7	7.7	7.7	7.7	3.1	15.1	-4.4	-8.1	-48.4	1.9
307	ok	0.12	0.6	6.77e-03	7.7	7.7	7.7	7.7	2.7	-13.1	23.8	-18.2	-57.5	4.3
308	ok	0.12	0.6	3.64e-03	7.7	7.7	7.7	7.7	5.7	21.0	-5.5	-8.1	-46.8	5.4
309	ok	0.12	0.5	1.03e-02	7.7	7.7	7.7	7.7	-2.3	-53.4	-13.5	-14.4	-55.6	7.6
310	ok	0.12	0.6	3.49e-03	7.7	7.7	7.7	7.7	7.0	27.0	-6.8	-7.1	-48.4	5.7
311	ok	0.12	0.6	1.13e-02	7.7	7.7	7.7	7.7	-1.8	-59.0	-14.9	-14.4	-58.0	7.8
312	ok	0.12	0.6	3.37e-03	7.7	7.7	7.7	7.7	7.5	27.3	-7.1	-6.0	-50.0	4.6
313	ok	0.12	0.6	1.16e-02	7.7	7.7	7.7	7.7	-1.4	-60.6	-15.5	-13.9	-58.9	6.5
314	ok	0.12	0.6	3.17e-03	7.7	7.7	7.7	7.7	7.6	27.2	12.6	-6.8	-51.3	1.8
315	ok	0.12	0.6	1.12e-02	7.7	7.7	7.7	7.7	-1.2	-58.5	-14.9	-13.8	-59.1	5.0
316	ok	0.12	0.6	3.01e-03	7.7	7.7	7.7	7.7	8.3	25.5	-6.1	-6.8	-49.1	1.9
317	ok	0.12	0.5	1.01e-02	7.7	7.7	7.7	7.7	-0.8	-52.0	-13.8	-14.1	-56.2	4.6
318	ok	0.12	0.5	2.66e-03	7.7	7.7	7.7	7.7	5.0	13.9	-13.8	-8.3	-44.2	-4.3
319	ok	0.12	0.6	6.75e-03	7.7	7.7	7.7	7.7	5.1	-12.9	22.6	-17.9	-57.7	4.5
320	ok	0.12	0.5	3.26e-03	7.7	7.7	7.7	7.7	7.5	14.4	13.3	-9.1	-46.2	4.3
321	ok	0.12	0.5	9.95e-03	7.7	7.7	7.7	7.7	-0.5	-52.0	-13.7	-13.8	-54.3	8.0
322	ok	0.12	0.6	3.22e-03	7.7	7.7	7.7	7.7	8.1	26.1	-6.2	-6.4	-47.2	5.9
323	ok	0.12	0.5	1.07e-02	7.7	7.7	7.7	7.7	-0.7	-57.3	-14.4	-13.6	-56.5	8.2
324	ok	0.12	0.6	3.15e-03	7.7	7.7	7.7	7.7	8.0	26.3	-6.1	-5.4	-48.7	4.9
325	ok	0.12	0.5	1.09e-02	7.7	7.7	7.7	7.7	-0.8	-58.7	-14.6	-13.2	-57.3	6.9
326	ok	0.12	0.6	3.15e-03	7.7	7.7	7.7	7.7	7.9	26.2	6.0	-5.4	-48.6	-4.9
327	ok	0.12	0.5	1.07e-02	7.7	7.7	7.7	7.7	-0.7	-57.4	14.4	-13.5	-56.4	-8.2
328	ok	0.12	0.6	3.25e-03	7.7	7.7	7.7	7.7	8.0	25.9	6.3	-6.3	-47.1	-5.9
329	ok	0.12	0.5	9.97e-03	7.7	7.7	7.7	7.7	-0.6	-52.1	13.8	-13.6	-54.2	-8.0
330	ok	0.12	0.5	3.30e-03	7.7	7.7	7.7	7.7	7.3	14.3	-13.1	-9.1	-46.1	-4.2
331	ok	0.12	0.6	6.77e-03	7.7	7.7	7.7	7.7	5.0	-12.9	-22.5	-17.9	-57.6	-4.5
332	ok	0.12	0.5	2.65e-03	7.7	7.7	7.7	7.7	7.5	20.3	-11.2	-8.4	-47.1	-0.9
333	ok	0.12	0.5	1.01e-02	7.7	7.7	7.7	7.7	-0.9	-51.8	13.8	-14.1	-56.1	-4.6
334	ok	0.12	0.6	3.05e-03	7.7	7.7	7.7	7.7	8.2	25.5	6.2	-6.8	-49.0	-1.9
335	ok	0.12	0.6	1.12e-02	7.7	7.7	7.7	7.7	-1.4	-58.3	14.9	-13.7	-58.9	-5.0
336	ok	0.12	0.6	3.21e-03	7.7	7.7	7.7	7.7	7.5	27.1	-12.5	-6.8	-51.2	-1.8
337	ok	0.12	0.6	1.15e-02	7.7	7.7	7.7	7.7	-1.6	-60.4	15.5	-13.8	-58.7	-6.5
338	ok	0.12	0.6	3.40e-03	7.7	7.7	7.7	7.7	7.4	27.2	7.1	-5.9	-49.8	-4.7
339	ok	0.12	0.6	1.12e-02	7.7	7.7	7.7	7.7	-2.0	-58.7	14.9	-14.3	-57.8	-7.8
340	ok	0.12	0.6	3.52e-03	7.7	7.7	7.7	7.7	6.9	27.0	6.8	-7.0	-48.2	-5.7
341	ok	0.12	0.5	1.03e-02	7.7	7.7	7.7	7.7	-2.5	-53.1	13.4	-14.3	-55.4	-7.6
342	ok	0.12	0.6	3.66e-03	7.7	7.7	7.7	7.7	5.5	20.9	5.5	-8.1	-46.6	-5.4
343	ok	0.12	0.6	6.74e-03	7.7	7.7	7.7	7.7	2.6	-13.0	-23.7	-18.2	-57.3	-4.3
344	ok	0.12	0.6	2.94e-03	7.7	7.7	7.7	7.7	1.2	19.2	-6.3	-7.8	-48.7	2.7
345	ok	0.12	0.6	1.01e-02	7.7	7.7	7.7	7.7	-4.5	-52.3	11.1	-14.4	-57.8	-4.4
346	ok	0.12	0.6	3.66e-03	7.7	7.7	7.7	7.7	4.5	25.7	4.1	-7.4	-50.1	-1.9
347	ok	0.12	0.6	1.11e-02	7.7	7.7	7.7	7.7	-5.9	-58.5	10.3	-14.1	-60.0	-4.7
348	ok	0.12	0.6	4.03e-03	7.7	7.7	7.7	7.7	3.3	25.9	3.0	-6.7	-51.5	-3.0
349	ok	0.12	0.6	1.25e-02	7.7	7.7	7.7	7.7	-6.9	-67.1	9.0	-14.2	-60.7	-6.1
350	ok	0.12	0.6	4.15e-03	7.7	7.7	7.7	7.7	2.2	21.3	1.8	-6.9	-51.1	-4.7
351	ok	0.12	0.6	1.28e-02	7.7	7.7	7.7	7.7	-8.1	-68.6	-27.4	-14.6	-59.4	-5.2
352	ok	0.12	0.6	4.24e-03	7.7	7.7	7.7	7.7	0.8	8.0	0.8	-6.2	-49.3	-6.7
353	ok	0.12	0.6	9.46e-03	7.7	7.7	7.7	7.7	-0.7	-31.0	-29.0	-13.5	-58.5	-6.2
354	ok	0.12	0.5	5.43e-03	7.7	7.7	7.7	7.7	2.5	-12.5	3.4	-7.2	-45.5	-4.2
355	ok	0.12	0.5	6.06e-03	7.7	7.7	7.7	7.7	3.2	-12.2	-3.0	-6.7	-45.9	3.5
356	ok	0.12	0.6	8.53e-03	7.7	7.7	7.7	7.7	-5.0	-30.7	30.2	-14.0	-59.8	6.5
357	ok	0.12	0.6	4.08e-03	7.7	7.7	7.7	7.7	1.2	2.7	21.7	-6.3	-49.5	6.2
358	ok	0.12	0.6	1.34e-02	7.7	7.7	7.7	7.7	-9.7	-70.9	30.0	-15.9	-61.8	5.4
359	ok	0.12	0.6	4.23e-03	7.7	7.7	7.7	7.7	3.6	22.3	18.6	-7.9	-51.6	3.8
360	ok	0.12	0.6	1.32e-02	7.7	7.7	7.7	7.7	-9.5	-70.0	29.2	-16.3	-63.5	4.0
361	ok	0.12	0.6	4.12e-03	7.7	7.7	7.7	7.7	4.7	28.3	16.3	-7.8	-52.0	2.2
362	ok	0.12	0.6	1.17e-02	7.7	7.7	7.7	7.7	-8.2	-61.3	26.9	-16.2	-62.8	2.8
363	ok	0.12	0.6	3.70e-03	7.7	7.7	7.7	7.7	5.9	28.9	14.3	-8.2	-50.6	1.2
364	ok	0.12	0.6	1.06e-02	7.7	7.7	7.7	7.7	-6.1	-55.5	23.7	-16.2	-60.3	2.6
365	ok	0.12	0.6	2.95e-03	7.7	7.7	7.7	7.7	5.0	22.9	12.3	-9.1	-49.0	1.3
366	ok	0.12	0.6	5.34e-03	7.7	7.7	7.7	7.7	1.3	-12.2	25.6	-18.9	-61.4	4.8
367	ok	0.12	0.6	3.75e-03	7.7	7.7	7.7	7.7	4.5	15.2	13.7	-9.7	-48.9	4.6

368	ok	0.12	0.6	1.09e-02	7.7	7.7	7.7	7.7	-4.6	-54.6	22.8	-16.5	-57.9	5.8
369	ok	0.12	0.6	3.57e-03	7.7	7.7	7.7	7.7	8.4	27.7	10.2	-8.2	-48.5	4.8
370	ok	0.12	0.6	1.20e-02	7.7	7.7	7.7	7.7	-2.8	-61.5	-18.2	-14.8	-60.5	7.4
371	ok	0.12	0.6	3.53e-03	7.7	7.7	7.7	7.7	8.9	29.2	9.6	-7.3	-51.6	3.8
372	ok	0.12	0.6	1.23e-02	7.7	7.7	7.7	7.7	-4.2	-63.4	24.6	-16.3	-63.3	4.3
373	ok	0.12	0.6	3.51e-03	7.7	7.7	7.7	7.7	9.2	29.7	9.7	-7.1	-51.3	2.4
374	ok	0.12	0.6	1.19e-02	7.7	7.7	7.7	7.7	-3.8	-61.3	23.9	-16.2	-61.8	3.0
375	ok	0.12	0.6	3.37e-03	7.7	7.7	7.7	7.7	9.5	29.1	9.9	-7.7	-49.3	1.3
376	ok	0.12	0.5	1.06e-02	7.7	7.7	7.7	7.7	-2.7	-55.0	21.8	-16.1	-58.6	2.9
377	ok	0.12	0.5	3.24e-03	7.7	7.7	7.7	7.7	9.3	22.8	9.7	-8.7	-47.1	1.4
378	ok	0.12	0.6	5.19e-03	7.7	7.7	7.7	7.7	3.6	-11.9	24.4	-18.6	-59.0	5.0
379	ok	0.12	0.5	3.45e-03	7.7	7.7	7.7	7.7	6.0	14.5	12.0	-9.2	-46.6	4.8
380	ok	0.12	0.5	1.05e-02	7.7	7.7	7.7	7.7	-2.8	-53.3	22.2	-16.0	-57.2	6.2
381	ok	0.12	0.6	3.30e-03	7.7	7.7	7.7	7.7	9.3	26.3	9.4	-7.6	-47.7	5.0
382	ok	0.12	0.6	1.15e-02	7.7	7.7	7.7	7.7	-4.4	-59.7	23.8	-15.7	-59.3	6.1
383	ok	0.12	0.6	3.21e-03	7.7	7.7	7.7	7.7	8.1	27.9	9.4	-6.7	-48.9	4.1
384	ok	0.12	0.6	1.17e-02	7.7	7.7	7.7	7.7	-4.4	-61.8	24.8	-15.6	-60.2	4.8
385	ok	0.12	0.6	3.23e-03	7.7	7.7	7.7	7.7	8.1	27.7	-9.5	-6.6	-48.9	-4.1
386	ok	0.12	0.6	1.15e-02	7.7	7.7	7.7	7.7	-4.4	-59.8	-23.8	-15.6	-59.2	-6.1
387	ok	0.12	0.6	3.34e-03	7.7	7.7	7.7	7.7	9.3	26.1	-9.4	-7.5	-47.6	-5.0
388	ok	0.12	0.5	1.05e-02	7.7	7.7	7.7	7.7	-2.8	-53.4	-22.0	-15.9	-57.1	-6.2
389	ok	0.12	0.5	3.49e-03	7.7	7.7	7.7	7.7	6.0	14.3	-11.8	-9.2	-46.5	-4.8
390	ok	0.12	0.6	5.21e-03	7.7	7.7	7.7	7.7	3.4	-11.9	-24.3	-18.7	-59.0	-5.0
391	ok	0.12	0.5	3.28e-03	7.7	7.7	7.7	7.7	9.2	22.7	-9.6	-8.6	-47.1	-1.4
392	ok	0.12	0.5	1.06e-02	7.7	7.7	7.7	7.7	-2.8	-54.9	-21.6	-16.1	-58.5	-2.9
393	ok	0.12	0.6	3.40e-03	7.7	7.7	7.7	7.7	9.3	29.0	-9.8	-7.6	-49.2	-1.3
394	ok	0.12	0.6	1.19e-02	7.7	7.7	7.7	7.7	-3.9	-61.1	-23.7	-16.2	-61.7	-3.0
395	ok	0.12	0.6	3.54e-03	7.7	7.7	7.7	7.7	9.1	29.6	-9.6	-7.0	-51.2	-2.4
396	ok	0.12	0.6	1.23e-02	7.7	7.7	7.7	7.7	-4.3	-63.1	-24.4	-16.2	-63.1	-4.3
397	ok	0.12	0.6	3.56e-03	7.7	7.7	7.7	7.7	8.7	29.0	-9.6	-7.3	-51.5	-3.8
398	ok	0.12	0.6	1.20e-02	7.7	7.7	7.7	7.7	-3.0	-61.3	18.1	-14.7	-60.2	-7.4
399	ok	0.12	0.6	3.59e-03	7.7	7.7	7.7	7.7	8.2	27.6	-10.2	-8.1	-48.3	-4.8
400	ok	0.12	0.6	1.08e-02	7.7	7.7	7.7	7.7	-4.8	-54.3	-22.6	-16.4	-57.7	-5.8
401	ok	0.12	0.6	3.76e-03	7.7	7.7	7.7	7.7	4.4	15.2	-13.6	-9.7	-48.7	-4.7
402	ok	0.12	0.6	5.31e-03	7.7	7.7	7.7	7.7	1.1	-12.1	-25.4	-18.8	-61.2	-4.8
403	ok	0.12	0.6	2.96e-03	7.7	7.7	7.7	7.7	4.9	22.8	-12.3	-9.0	-48.8	-1.3
404	ok	0.12	0.6	1.06e-02	7.7	7.7	7.7	7.7	-6.2	-55.1	-23.5	-16.2	-60.1	-2.7
405	ok	0.12	0.6	3.69e-03	7.7	7.7	7.7	7.7	5.8	28.8	-14.3	-8.1	-50.4	-1.2
406	ok	0.12	0.6	1.17e-02	7.7	7.7	7.7	7.7	-8.2	-61.0	-26.8	-16.2	-62.5	-2.8
407	ok	0.12	0.6	4.10e-03	7.7	7.7	7.7	7.7	4.7	28.2	-16.2	-7.8	-51.8	-2.2
408	ok	0.12	0.6	1.32e-02	7.7	7.7	7.7	7.7	-9.5	-69.6	-29.0	-16.2	-63.3	-4.0
409	ok	0.12	0.6	4.20e-03	7.7	7.7	7.7	7.7	3.5	22.2	-18.6	-7.9	-51.4	-3.8
410	ok	0.12	0.6	1.34e-02	7.7	7.7	7.7	7.7	-9.7	-70.5	-29.8	-15.8	-61.5	-5.4
411	ok	0.12	0.6	4.10e-03	7.7	7.7	7.7	7.7	1.2	2.7	-21.6	-6.3	-49.3	-6.2
412	ok	0.12	0.6	8.54e-03	7.7	7.7	7.7	7.7	-5.0	-30.5	-30.1	-13.9	-59.5	-6.5
413	ok	0.12	0.5	6.11e-03	7.7	7.7	7.7	7.7	3.1	-12.2	3.0	-6.7	-45.7	-3.5
414	ok	0.12	0.4	5.91e-03	7.7	7.7	7.7	7.7	-3.2	-18.9	-5.9	-1.0	-39.4	1.0
415	ok	0.12	0.5	4.81e-03	7.7	7.7	7.7	7.7	-4.6	10.4	22.9	-9.9	-42.9	5.9
416	ok	0.12	0.5	3.68e-03	7.7	7.7	7.7	7.7	-0.7	-2.6	19.8	-5.4	-42.8	5.4
417	ok	0.12	0.5	2.66e-03	7.7	7.7	7.7	7.7	0.7	22.0	23.0	-13.8	-47.3	5.5
418	ok	0.12	0.5	2.52e-03	7.7	7.7	7.7	7.7	3.4	2.7	18.7	-8.3	-45.6	4.6
419	ok	0.12	0.6	2.60e-03	7.7	7.7	7.7	7.7	2.7	28.3	21.5	-13.6	-48.3	4.9
420	ok	0.12	0.5	2.16e-03	7.7	7.7	7.7	7.7	5.8	6.7	16.9	-8.1	-45.8	4.0
421	ok	0.12	0.6	2.49e-03	7.7	7.7	7.7	7.7	4.7	31.9	19.4	-13.3	-47.6	4.3
422	ok	0.12	0.5	2.10e-03	7.7	7.7	7.7	7.7	7.6	6.3	15.0	-8.0	-44.6	3.7
423	ok	0.12	0.5	2.58e-03	7.7	7.7	7.7	7.7	6.4	31.1	16.7	-13.3	-46.0	4.1
424	ok	0.12	0.5	2.21e-03	7.7	7.7	7.7	7.7	9.1	6.0	12.6	-8.3	-42.8	3.6
425	ok	0.12	0.5	2.82e-03	7.7	7.7	7.7	7.7	7.6	33.1	16.0	-12.8	-43.6	4.8
426	ok	0.12	0.5	2.42e-03	7.7	7.7	7.7	7.7	9.9	6.1	12.5	-8.0	-42.5	5.1
427	ok	0.12	0.5	3.26e-03	7.7	7.7	7.7	7.7	8.0	31.9	15.7	-13.3	-43.9	5.9
428	ok	0.12	0.5	2.64e-03	7.7	7.7	7.7	7.7	11.1	6.3	11.6	-8.0	-42.7	5.3
429	ok	0.12	0.6	3.54e-03	7.7	7.7	7.7	7.7	8.1	33.5	16.5	-13.4	-45.6	5.9
430	ok	0.12	0.5	2.68e-03	7.7	7.7	7.7	7.7	11.7	6.3	11.8	-7.8	-45.3	5.1
431	ok	0.12	0.6	3.64e-03	7.7	7.7	7.7	7.7	8.2	34.0	17.1	-13.4	-47.6	5.4
432	ok	0.12	0.5	2.62e-03	7.7	7.7	7.7	7.7	12.0	6.0	12.3	-7.7	-45.1	4.5
433	ok	0.12	0.6	3.57e-03	7.7	7.7	7.7	7.7	8.5	33.2	16.9	-13.2	-46.6	4.7
434	ok	0.12	0.5	2.66e-03	7.7	7.7	7.7	7.7	12.0	5.7	12.3	-7.8	-43.5	4.1
435	ok	0.12	0.5	3.44e-03	7.7	7.7	7.7	7.7	8.8	31.2	15.3	-13.2	-44.5	4.4
436	ok	0.12	0.5	2.51e-03	7.7	7.7	7.7	7.7	11.9	5.4	11.1	-8.0	-41.3	3.9
437	ok	0.12	0.5	3.28e-03	7.7	7.7	7.7	7.7	11.8	31.8	15.2	-12.6	-41.9	5.1
438	ok	0.12	0.4	2.61e-03	7.7	7.7	7.7	7.7	11.3	5.6	11.8	-7.7	-40.7	5.4
439	ok	0.12	0.5	3.41e-03	7.7	7.7	7.7	7.7	6.3	30.4	15.3	-13.0	-43.5	6.2
440	ok	0.12	0.5	2.68e-03	7.7	7.7	7.7	7.7	9.6	5.1	11.3	-7.6	-42.0	5.6
441	ok	0.12	0.5	3.42e-03	7.7	7.7	7.7	7.7	5.6	32.0	16.5	-13.0	-44.8	6.2
442	ok	0.12	0.5	2.52e-03	7.7	7.7	7.7	7.7	9.4	5.2	11.9	-7.3	-43.2	5.4
443	ok	0.12	0.5	3.31e-03	7.7	7.7	7.7	7.7	5.1	32.7	17.3	-12.9	-45.3	5.7
444	ok	0.12	0.5	2.53e-03	7.7	7.7	7.7	7.7	9.4	5.1	-12.0	-7.2	-43.1	-5.4
445	ok	0.12	0.5	3.45e-03	7.7	7.7	7.7	7.7	5.5	31.7	-16.4	-12.9	-44.7	-6.2
446	ok	0.12	0.5	2.74e-03	7.7	7.7	7.7	7.7	9.5	4.9	-11.3	-7.4	-41.9	-5.6

447	ok	0.12	0.5	3.48e-03	7.7	7.7	7.7	7.7	9.6	30.0	-15.2	-12.8	-43.3	-6.2
448	ok	0.12	0.4	2.69e-03	7.7	7.7	7.7	7.7	11.2	5.4	-11.5	-7.6	-40.6	-5.4
449	ok	0.12	0.5	3.35e-03	7.7	7.7	7.7	7.7	11.5	31.7	-15.0	-12.7	-41.9	-5.1
450	ok	0.12	0.5	2.59e-03	7.7	7.7	7.7	7.7	11.7	5.3	-10.9	-8.0	-41.3	-3.9
451	ok	0.12	0.5	3.50e-03	7.7	7.7	7.7	7.7	8.6	31.1	-15.0	-13.2	-44.5	-4.4
452	ok	0.12	0.5	2.73e-03	7.7	7.7	7.7	7.7	11.8	5.6	-12.1	-7.7	-43.4	-4.1
453	ok	0.12	0.6	3.63e-03	7.7	7.7	7.7	7.7	8.2	33.0	-16.6	-13.2	-46.5	-4.7
454	ok	0.12	0.5	2.69e-03	7.7	7.7	7.7	7.7	11.8	5.9	-12.1	-7.7	-45.0	-4.5
455	ok	0.12	0.6	3.69e-03	7.7	7.7	7.7	7.7	7.9	33.8	-16.9	-13.3	-47.5	-5.4
456	ok	0.12	0.5	2.75e-03	7.7	7.7	7.7	7.7	11.5	6.2	-11.7	-7.8	-45.2	-5.1
457	ok	0.12	0.6	3.59e-03	7.7	7.7	7.7	7.7	7.8	33.3	-16.3	-13.3	-45.4	-5.9
458	ok	0.12	0.5	2.70e-03	7.7	7.7	7.7	7.7	10.9	6.2	-11.4	-7.9	-42.5	-5.3
459	ok	0.12	0.5	3.30e-03	7.7	7.7	7.7	7.7	7.8	31.8	-15.4	-13.2	-43.8	-5.9
460	ok	0.12	0.5	2.47e-03	7.7	7.7	7.7	7.7	9.7	6.1	-12.4	-7.9	-42.4	-5.1
461	ok	0.12	0.5	2.85e-03	7.7	7.7	7.7	7.7	7.3	32.9	-15.8	-12.8	-43.5	-4.8
462	ok	0.12	0.5	2.24e-03	7.7	7.7	7.7	7.7	9.0	5.9	-12.5	-8.2	-42.7	-3.6
463	ok	0.12	0.5	2.60e-03	7.7	7.7	7.7	7.7	6.2	31.0	-16.5	-13.3	-45.8	-4.1
464	ok	0.12	0.5	2.13e-03	7.7	7.7	7.7	7.7	7.5	6.3	-15.0	-7.9	-44.4	-3.7
465	ok	0.12	0.6	2.48e-03	7.7	7.7	7.7	7.7	4.5	31.7	-19.3	-13.3	-47.5	-4.3
466	ok	0.12	0.5	2.18e-03	7.7	7.7	7.7	7.7	5.7	6.7	-16.8	-8.0	-45.7	-4.1
467	ok	0.12	0.6	2.58e-03	7.7	7.7	7.7	7.7	2.5	28.1	-21.3	-13.6	-48.2	-4.9
468	ok	0.12	0.5	2.52e-03	7.7	7.7	7.7	7.7	3.3	2.7	-18.6	-8.3	-45.4	-4.6
469	ok	0.12	0.5	2.69e-03	7.7	7.7	7.7	7.7	0.6	21.9	-22.8	-13.7	-47.1	-5.5
470	ok	0.12	0.5	3.70e-03	7.7	7.7	7.7	7.7	-0.8	-2.7	-19.7	-5.4	-42.6	-5.4
471	ok	0.12	0.5	4.89e-03	7.7	7.7	7.7	7.7	-4.6	10.3	-22.8	-9.9	-42.7	-5.9
472	ok	0.12	0.4	5.97e-03	7.7	7.7	7.7	7.7	-3.2	-18.9	5.9	-1.0	-39.3	-1.0
473	ok	0.12	0.2	5.68e-03	7.7	7.7	7.7	7.7	-3.4	-12.6	-6.2	1.6	-17.6	4.0
474	ok	0.12	0.2	4.50e-03	7.7	7.7	7.7	7.7	0.7	24.3	7.9	-4.0	-16.7	3.5
475	ok	0.12	0.2	1.89e-03	7.7	7.7	7.7	7.7	1.4	14.3	-2.1	-2.3	-18.9	3.6
476	ok	0.12	0.3	2.60e-03	7.7	7.7	7.7	7.7	5.3	38.9	6.4	-6.7	-18.6	3.0
477	ok	0.12	0.3	1.29e-03	7.7	7.7	7.7	7.7	4.3	22.2	6.8	-4.4	-20.6	3.1
478	ok	0.12	0.3	2.81e-03	7.7	7.7	7.7	7.7	9.0	45.9	4.9	-6.2	-19.0	2.9
479	ok	0.12	0.3	2.01e-03	7.7	7.7	7.7	7.7	7.7	26.6	5.8	-4.0	-20.5	3.1
480	ok	0.12	0.3	2.68e-03	7.7	7.7	7.7	7.7	12.1	46.7	3.5	-6.0	-18.6	2.9
481	ok	0.12	0.3	2.30e-03	7.7	7.7	7.7	7.7	10.2	26.7	4.7	-3.9	-19.9	3.0
482	ok	0.12	0.3	2.66e-03	7.7	7.7	7.7	7.7	14.5	45.7	2.4	-6.0	-17.9	2.9
483	ok	0.12	0.3	2.69e-03	7.7	7.7	7.7	7.7	13.3	26.2	3.6	-3.8	-18.9	3.2
484	ok	0.12	0.3	3.01e-03	7.7	7.7	7.7	7.7	16.1	45.0	2.2	-5.8	-17.1	3.2
485	ok	0.12	0.2	3.03e-03	7.7	7.7	7.7	7.7	14.7	26.1	3.5	-3.4	-18.7	3.5
486	ok	0.12	0.3	3.19e-03	7.7	7.7	7.7	7.7	17.2	45.5	1.7	-6.0	-17.7	3.6
487	ok	0.12	0.3	3.21e-03	7.7	7.7	7.7	7.7	15.7	26.9	3.0	-3.9	-19.6	3.8
488	ok	0.12	0.3	3.23e-03	7.7	7.7	7.7	7.7	17.5	46.8	1.9	-5.9	-18.3	3.6
489	ok	0.12	0.3	3.23e-03	7.7	7.7	7.7	7.7	16.1	27.4	3.3	-3.9	-20.0	3.7
490	ok	0.12	0.3	3.20e-03	7.7	7.7	7.7	7.7	17.5	47.2	2.4	-5.8	-18.5	3.5
491	ok	0.12	0.3	3.30e-03	7.7	7.7	7.7	7.7	16.2	27.2	3.9	-3.9	-19.9	3.6
492	ok	0.12	0.3	3.19e-03	7.7	7.7	7.7	7.7	17.5	46.3	2.8	-5.8	-18.1	3.4
493	ok	0.12	0.3	3.20e-03	7.7	7.7	7.7	7.7	16.2	26.3	4.2	-3.8	-19.2	3.5
494	ok	0.12	0.3	3.22e-03	7.7	7.7	7.7	7.7	17.4	44.4	2.4	-6.0	-17.3	3.4
495	ok	0.12	0.2	3.20e-03	7.7	7.7	7.7	7.7	16.2	25.3	3.8	-3.7	-18.2	3.7
496	ok	0.12	0.3	3.45e-03	7.7	7.7	7.7	7.7	17.0	43.3	2.6	-5.7	-16.4	3.7
497	ok	0.12	0.2	3.21e-03	7.7	7.7	7.7	7.7	15.9	25.1	4.0	-3.2	-17.8	4.0
498	ok	0.12	0.3	3.43e-03	7.7	7.7	7.7	7.7	16.5	43.3	2.4	-5.9	-16.9	4.0
499	ok	0.12	0.3	3.10e-03	7.7	7.7	7.7	7.7	15.5	25.9	3.7	-3.7	-18.6	4.2
500	ok	0.12	0.3	3.36e-03	7.7	7.7	7.7	7.7	15.7	44.6	2.7	-5.7	-17.4	4.0
501	ok	0.12	0.3	2.87e-03	7.7	7.7	7.7	7.7	15.2	26.1	4.2	-3.6	-19.0	4.1
502	ok	0.12	0.3	3.27e-03	7.7	7.7	7.7	7.7	14.5	45.1	3.4	-5.6	-17.6	3.8
503	ok	0.12	0.3	2.91e-03	7.7	7.7	7.7	7.7	14.8	26.0	-4.2	-3.6	-18.9	-4.1
504	ok	0.12	0.3	3.43e-03	7.7	7.7	7.7	7.7	15.2	44.3	-2.8	-5.7	-17.4	-4.0
505	ok	0.12	0.3	3.18e-03	7.7	7.7	7.7	7.7	15.4	25.6	-3.7	-3.6	-18.5	-4.2
506	ok	0.12	0.3	3.54e-03	7.7	7.7	7.7	7.7	16.2	42.9	-2.4	-5.8	-16.9	-4.0
507	ok	0.12	0.2	3.32e-03	7.7	7.7	7.7	7.7	15.6	25.0	-3.7	-3.2	-17.8	-4.0
508	ok	0.12	0.3	3.56e-03	7.7	7.7	7.7	7.7	16.6	43.2	-2.4	-5.8	-16.4	-3.7
509	ok	0.12	0.2	3.30e-03	7.7	7.7	7.7	7.7	15.9	25.2	-3.6	-3.7	-18.1	-3.7
510	ok	0.12	0.3	3.33e-03	7.7	7.7	7.7	7.7	17.0	44.2	-2.2	-6.0	-17.3	-3.4
511	ok	0.12	0.3	3.30e-03	7.7	7.7	7.7	7.7	15.8	26.2	-4.1	-3.7	-19.2	-3.5
512	ok	0.12	0.3	3.29e-03	7.7	7.7	7.7	7.7	17.1	46.1	-2.6	-5.8	-18.1	-3.4
513	ok	0.12	0.3	3.39e-03	7.7	7.7	7.7	7.7	15.8	27.0	-3.8	-3.8	-19.8	-3.6
514	ok	0.12	0.3	3.30e-03	7.7	7.7	7.7	7.7	17.2	47.0	-2.3	-5.8	-18.4	-3.5
515	ok	0.12	0.3	3.32e-03	7.7	7.7	7.7	7.7	15.7	27.2	-3.2	-3.9	-19.9	-3.7
516	ok	0.12	0.3	3.32e-03	7.7	7.7	7.7	7.7	17.1	46.6	-1.7	-5.9	-18.2	-3.6
517	ok	0.12	0.3	3.29e-03	7.7	7.7	7.7	7.7	15.4	26.8	-2.9	-3.9	-19.5	-3.8
518	ok	0.12	0.3	3.27e-03	7.7	7.7	7.7	7.7	16.9	45.3	-1.6	-6.0	-17.7	-3.6
519	ok	0.12	0.2	3.09e-03	7.7	7.7	7.7	7.7	14.4	26.0	-3.4	-3.4	-18.7	-3.5
520	ok	0.12	0.3	3.07e-03	7.7	7.7	7.7	7.7	15.8	44.8	-2.1	-5.8	-17.1	-3.3
521	ok	0.12	0.3	2.74e-03	7.7	7.7	7.7	7.7	13.0	26.1	-3.6	-3.7	-18.9	-3.2
522	ok	0.12	0.3	2.71e-03	7.7	7.7	7.7	7.7	14.2	45.5	-2.3	-6.0	-17.9	-3.0
523	ok	0.12	0.3	2.34e-03	7.7	7.7	7.7	7.7	10.0	26.5	-4.7	-3.8	-19.8	-3.1
524	ok	0.12	0.3	2.72e-03	7.7	7.7	7.7	7.7	11.9	46.5	-3.4	-5.9	-18.6	-2.9
525	ok	0.12	0.3	2.04e-03	7.7	7.7	7.7	7.7	7.6	26.4	-5.8	-4.0	-20.5	-3.1

526	ok	0.12	0.3	2.85e-03	7.7	7.7	7.7	7.7	8.8	45.7	-4.8	-6.2	-18.9	-3.0
527	ok	0.12	0.3	1.29e-03	7.7	7.7	7.7	7.7	4.2	22.1	-6.8	-4.3	-20.5	-3.1
528	ok	0.12	0.3	2.63e-03	7.7	7.7	7.7	7.7	5.2	38.7	-6.4	-6.7	-18.5	-3.0
529	ok	0.12	0.2	1.94e-03	7.7	7.7	7.7	7.7	1.4	14.2	2.0	-2.3	-18.8	-3.6
530	ok	0.12	0.2	4.57e-03	7.7	7.7	7.7	7.7	0.7	24.2	-7.9	-4.1	-16.6	-3.5
531	ok	0.12	0.2	5.73e-03	7.7	7.7	7.7	7.7	-3.4	-12.6	6.2	1.6	-17.6	-4.0
532	ok	0.12	9.93e-02	4.73e-03	7.7	7.7	7.7	7.7	-0.2	1.2	2.9	-3.7	-4.7	-2.7
533	ok	0.12	0.1	3.19e-03	7.7	7.7	7.7	7.7	4.26e-02	7.0	3.0	-7.6	-4.0	-1.2
534	ok	0.12	8.92e-02	1.74e-03	7.7	7.7	7.7	7.7	3.8	3.9	-1.8	-2.2	-2.1	-2.8
535	ok	0.12	0.1	1.44e-03	7.7	7.7	7.7	7.7	8.0	11.1	2.5	-4.4	-2.9	4.9
536	ok	0.12	0.1	1.93e-03	7.7	7.7	7.7	7.7	9.6	12.4	4.4	-1.2	-2.2	5.1
537	ok	0.12	0.1	2.16e-03	7.7	7.7	7.7	7.7	13.1	21.6	4.3	-3.5	-2.8	5.4
538	ok	0.12	0.1	2.71e-03	7.7	7.7	7.7	7.7	14.1	19.2	7.0	-0.6	-2.0	5.6
539	ok	0.12	0.1	2.73e-03	7.7	7.7	7.7	7.7	17.3	21.6	6.9	-3.2	-2.6	5.5
540	ok	0.12	0.1	3.11e-03	7.7	7.7	7.7	7.7	-3.4	13.2	-15.0	0.5	-1.5	-6.5
541	ok	0.12	0.1	3.09e-03	7.7	7.7	7.7	7.7	20.5	20.9	8.8	-3.3	-2.5	5.7
542	ok	0.12	0.1	3.44e-03	7.7	7.7	7.7	7.7	-3.3	12.9	-17.0	0.6	-1.3	-6.5
543	ok	0.12	0.1	3.47e-03	7.7	7.7	7.7	7.7	22.5	20.2	10.2	-3.4	-2.3	5.8
544	ok	0.12	0.1	3.76e-03	7.7	7.7	7.7	7.7	-2.9	13.4	-18.8	0.5	-1.3	-6.5
545	ok	0.12	0.1	3.69e-03	7.7	7.7	7.7	7.7	23.1	20.2	11.6	-3.3	-2.3	6.0
546	ok	0.12	0.1	3.91e-03	7.7	7.7	7.7	7.7	-2.1	14.5	-20.2	0.4	-1.4	-6.5
547	ok	0.12	0.1	3.78e-03	7.7	7.7	7.7	7.7	22.8	20.7	13.1	-3.3	-2.5	6.1
548	ok	0.12	0.2	3.92e-03	7.7	7.7	7.7	7.7	-0.8	15.2	-20.9	0.3	-1.5	-6.6
549	ok	0.12	0.1	3.66e-03	7.7	7.7	7.7	7.7	22.0	20.7	14.8	-3.2	-2.5	6.1
550	ok	0.12	0.2	3.84e-03	7.7	7.7	7.7	7.7	25.4	10.3	21.2	2.0	-0.3	6.3
551	ok	0.12	0.1	3.56e-03	7.7	7.7	7.7	7.7	21.0	20.0	16.3	-3.2	-2.4	6.2
552	ok	0.12	0.2	3.73e-03	7.7	7.7	7.7	7.7	24.2	9.8	22.5	2.0	-0.2	6.3
553	ok	0.12	0.1	3.52e-03	7.7	7.7	7.7	7.7	19.8	18.9	17.1	-3.3	-2.3	6.2
554	ok	0.12	0.2	3.67e-03	7.7	7.7	7.7	7.7	22.3	15.2	24.0	2.2	0.1	6.5
555	ok	0.12	0.1	3.58e-03	7.7	7.7	7.7	7.7	18.3	18.1	17.5	-3.3	-2.2	6.3
556	ok	0.12	0.2	3.68e-03	7.7	7.7	7.7	7.7	20.7	14.9	24.3	2.2	0.1	6.6
557	ok	0.12	0.1	3.51e-03	7.7	7.7	7.7	7.7	16.3	17.1	17.9	-3.2	-2.1	6.5
558	ok	0.12	0.2	3.56e-03	7.7	7.7	7.7	7.7	19.0	9.3	23.6	2.1	-0.2	6.6
559	ok	0.12	0.1	3.52e-03	7.7	7.7	7.7	7.7	14.7	17.9	18.5	-3.1	-2.2	6.5
560	ok	0.12	0.2	3.36e-03	7.7	7.7	7.7	7.7	16.7	9.5	24.4	2.2	-0.3	6.7
561	ok	0.12	0.1	3.21e-03	7.7	7.7	7.7	7.7	11.5	18.1	19.2	-3.0	-2.3	6.5
562	ok	0.12	0.2	3.40e-03	7.7	7.7	7.7	7.7	11.9	9.5	25.1	2.3	-0.3	6.6
563	ok	0.12	0.1	3.58e-03	7.7	7.7	7.7	7.7	14.7	17.6	-18.4	-3.0	-2.2	-6.6
564	ok	0.12	0.2	3.65e-03	7.7	7.7	7.7	7.7	11.0	9.2	25.6	2.4	-0.2	6.6
565	ok	0.12	0.1	3.60e-03	7.7	7.7	7.7	7.7	16.0	17.0	-17.8	-3.2	-2.1	-6.5
566	ok	0.12	0.2	3.81e-03	7.7	7.7	7.7	7.7	9.2	14.9	26.0	2.5	0.1	6.7
567	ok	0.12	0.1	3.71e-03	7.7	7.7	7.7	7.7	17.9	18.0	-17.1	-3.4	-2.2	-6.4
568	ok	0.12	0.2	3.78e-03	7.7	7.7	7.7	7.7	7.3	13.8	25.2	2.5	0.1	6.7
569	ok	0.12	0.1	3.64e-03	7.7	7.7	7.7	7.7	19.4	18.7	-16.8	-3.3	-2.3	-6.3
570	ok	0.12	0.2	3.84e-03	7.7	7.7	7.7	7.7	5.8	8.1	23.9	2.4	-0.2	6.7
571	ok	0.12	0.1	3.68e-03	7.7	7.7	7.7	7.7	20.5	19.8	-16.0	-3.2	-2.4	-6.2
572	ok	0.12	0.2	3.95e-03	7.7	7.7	7.7	7.7	4.0	8.3	23.6	2.5	-0.3	6.6
573	ok	0.12	0.1	3.77e-03	7.7	7.7	7.7	7.7	21.5	20.5	-14.6	-3.2	-2.5	-6.2
574	ok	0.12	0.2	4.02e-03	7.7	7.7	7.7	7.7	2.6	8.2	23.2	2.5	-0.3	6.5
575	ok	0.12	0.1	3.88e-03	7.7	7.7	7.7	7.7	22.4	20.5	-13.0	-3.2	-2.4	-6.1
576	ok	0.12	0.1	4.00e-03	7.7	7.7	7.7	7.7	1.7	7.8	22.3	2.5	-0.2	6.4
577	ok	0.12	0.1	3.77e-03	7.7	7.7	7.7	7.7	22.8	20.0	-11.4	-3.3	-2.3	-6.0
578	ok	0.12	0.1	3.84e-03	7.7	7.7	7.7	7.7	0.5	13.2	21.1	2.7	0.1	6.4
579	ok	0.12	0.1	3.54e-03	7.7	7.7	7.7	7.7	22.1	20.1	-10.1	-3.4	-2.3	-5.9
580	ok	0.12	0.1	3.49e-03	7.7	7.7	7.7	7.7	0.5	13.0	19.2	2.6	0.1	6.5
581	ok	0.12	0.1	3.15e-03	7.7	7.7	7.7	7.7	20.2	20.7	-8.7	-3.3	-2.5	-5.7
582	ok	0.12	0.1	3.16e-03	7.7	7.7	7.7	7.7	1.9	7.3	16.5	2.6	-0.2	6.3
583	ok	0.12	0.1	2.78e-03	7.7	7.7	7.7	7.7	17.1	21.4	-6.8	-3.2	-2.6	-5.6
584	ok	0.12	0.1	2.74e-03	7.7	7.7	7.7	7.7	2.2	10.2	14.1	2.8	-0.3	6.2
585	ok	0.12	0.1	2.18e-03	7.7	7.7	7.7	7.7	12.9	21.4	-4.3	-3.5	-2.8	-5.4
586	ok	0.12	0.1	1.94e-03	7.7	7.7	7.7	7.7	0.8	17.1	11.2	3.3	-0.1	5.8
587	ok	0.12	0.1	1.45e-03	7.7	7.7	7.7	7.7	7.8	11.0	-2.5	-4.4	-2.9	-4.9
588	ok	0.12	8.88e-02	1.78e-03	7.7	7.7	7.7	7.7	0.4	19.3	8.1	1.3	-1.3	4.3
589	ok	0.12	0.1	3.24e-03	7.7	7.7	7.7	7.7	6.15e-02	6.7	-2.8	-7.6	-4.0	1.1
590	ok	0.12	9.86e-02	4.77e-03	7.7	7.7	7.7	7.7	-0.2	0.9	-2.9	-3.6	-4.7	2.6
591	ok	0.12	0.1	3.23e-03	7.7	7.7	7.7	7.7	-1.1	1.8	2.2	-3.3	-8.7	-0.9
592	ok	0.12	0.1	2.01e-03	7.7	7.7	7.7	7.7	3.3	5.9	1.0	-9.3	-8.5	0.7
593	ok	0.12	8.28e-02	1.54e-03	7.7	7.7	7.7	7.7	6.9	5.1	-5.8	-4.1	-5.7	-2.2
594	ok	0.12	0.1	2.65e-03	7.7	7.7	7.7	7.7	0.1	11.4	-10.4	-4.0	-4.5	-4.8
595	ok	0.12	0.1	2.50e-03	7.7	7.7	7.7	7.7	4.4	8.2	-15.0	1.4	-2.8	-5.6
596	ok	0.12	0.1	3.42e-03	7.7	7.7	7.7	7.7	-0.9	10.5	-14.4	-1.9	-3.3	-6.0
597	ok	0.12	0.1	3.12e-03	7.7	7.7	7.7	7.7	2.5	7.6	-18.2	1.8	-2.2	-6.3
598	ok	0.12	0.1	3.85e-03	7.7	7.7	7.7	7.7	-3.0	10.0	-16.8	-1.9	-3.1	-6.4
599	ok	0.12	0.1	3.55e-03	7.7	7.7	7.7	7.7	1.1	7.3	-20.1	1.7	-2.1	-6.5
600	ok	0.12	0.1	4.16e-03	7.7	7.7	7.7	7.7	-3.9	9.7	-18.4	-2.4	-2.9	-6.5
601	ok	0.12	0.1	3.85e-03	7.7	7.7	7.7	7.7	0.7	6.9	-21.6	1.8	-1.9	-6.6
602	ok	0.12	0.1	4.40e-03	7.7	7.7	7.7	7.7	-4.1	9.5	-19.6	-2.6	-2.8	-6.6
603	ok	0.12	0.1	4.12e-03	7.7	7.7	7.7	7.7	-1.7	6.9	-24.0	0.8	-2.0	-6.8
604	ok	0.12	0.1	4.51e-03	7.7	7.7	7.7	7.7	-3.7	9.7	-21.2	-2.4	-2.8	-6.6

605	ok	0.12	0.1	4.25e-03	7.7	7.7	7.7	7.7	-0.9	7.2	-25.0	0.7	-2.0	-6.9
606	ok	0.12	0.1	4.56e-03	7.7	7.7	7.7	7.7	-3.7	9.1	-22.1	-2.3	-2.8	-6.7
607	ok	0.12	0.2	4.26e-03	7.7	7.7	7.7	7.7	0.5	7.4	-25.5	0.6	-2.0	-7.0
608	ok	0.12	0.1	4.49e-03	7.7	7.7	7.7	7.7	-2.3	9.2	-22.5	-2.4	-2.7	-6.7
609	ok	0.12	0.2	4.17e-03	7.7	7.7	7.7	7.7	2.4	7.3	-25.7	0.6	-1.9	-7.0
610	ok	0.12	0.1	4.42e-03	7.7	7.7	7.7	7.7	-0.3	9.1	-22.7	-2.4	-2.6	-6.8
611	ok	0.12	0.2	4.04e-03	7.7	7.7	7.7	7.7	4.7	6.3	-25.7	0.6	-1.8	-7.1
612	ok	0.12	0.1	4.32e-03	7.7	7.7	7.7	7.7	2.7	8.8	-23.0	-2.5	-2.5	-6.8
613	ok	0.12	0.2	3.92e-03	7.7	7.7	7.7	7.7	7.9	6.0	-25.9	0.6	-1.7	-7.1
614	ok	0.12	0.1	4.24e-03	7.7	7.7	7.7	7.7	4.9	8.6	-23.1	-2.7	-2.5	-6.8
615	ok	0.12	0.2	3.88e-03	7.7	7.7	7.7	7.7	24.0	6.6	25.4	1.4	-1.1	6.7
616	ok	0.12	0.1	4.14e-03	7.7	7.7	7.7	7.7	7.0	8.9	-23.7	-2.6	-2.4	-6.8
617	ok	0.12	0.2	3.74e-03	7.7	7.7	7.7	7.7	21.1	6.9	25.9	1.4	-1.3	6.8
618	ok	0.12	0.1	3.99e-03	7.7	7.7	7.7	7.7	9.1	9.1	-23.5	-2.5	-2.4	-6.8
619	ok	0.12	0.2	3.54e-03	7.7	7.7	7.7	7.7	18.2	7.0	26.6	1.5	-1.3	6.8
620	ok	0.12	0.1	3.72e-03	7.7	7.7	7.7	7.7	11.6	9.1	-23.1	-2.5	-2.3	-6.8
621	ok	0.12	0.2	3.60e-03	7.7	7.7	7.7	7.7	15.2	6.9	27.2	1.5	-1.4	6.8
622	ok	0.12	0.1	4.00e-03	7.7	7.7	7.7	7.7	14.6	9.0	-22.4	-2.5	-2.3	-6.8
623	ok	0.12	0.2	3.84e-03	7.7	7.7	7.7	7.7	12.8	6.7	27.6	1.6	-1.4	6.8
624	ok	0.12	0.1	4.19e-03	7.7	7.7	7.7	7.7	17.4	8.8	-21.6	-2.6	-2.3	-6.8
625	ok	0.12	0.2	4.01e-03	7.7	7.7	7.7	7.7	10.7	6.5	27.7	1.6	-1.3	6.7
626	ok	0.12	0.1	4.34e-03	7.7	7.7	7.7	7.7	4.6	8.5	23.7	-2.7	-2.5	6.7
627	ok	0.12	0.2	4.05e-03	7.7	7.7	7.7	7.7	8.4	6.5	26.8	1.6	-1.5	6.8
628	ok	0.12	0.1	4.42e-03	7.7	7.7	7.7	7.7	2.3	8.7	23.5	-2.5	-2.5	6.7
629	ok	0.12	0.2	4.16e-03	7.7	7.7	7.7	7.7	5.2	6.9	26.4	1.6	-1.6	6.8
630	ok	0.12	0.1	4.51e-03	7.7	7.7	7.7	7.7	-0.8	8.9	23.2	-2.4	-2.6	6.7
631	ok	0.12	0.2	4.30e-03	7.7	7.7	7.7	7.7	3.0	7.2	26.0	1.7	-1.7	6.7
632	ok	0.12	0.1	4.58e-03	7.7	7.7	7.7	7.7	-2.8	9.1	22.9	-2.3	-2.7	6.6
633	ok	0.12	0.2	4.37e-03	7.7	7.7	7.7	7.7	1.2	7.3	25.6	1.7	-1.8	6.7
634	ok	0.12	0.1	4.64e-03	7.7	7.7	7.7	7.7	-4.1	9.0	22.4	-2.3	-2.7	6.6
635	ok	0.12	0.1	4.34e-03	7.7	7.7	7.7	7.7	0.2	7.2	24.8	1.7	-1.8	6.6
636	ok	0.12	0.1	4.57e-03	7.7	7.7	7.7	7.7	-4.7	9.6	21.5	-2.4	-2.8	6.5
637	ok	0.12	0.1	4.20e-03	7.7	7.7	7.7	7.7	0.6	6.9	23.7	1.7	-1.8	6.5
638	ok	0.12	0.1	4.45e-03	7.7	7.7	7.7	7.7	-4.4	9.5	19.8	-2.6	-2.8	6.5
639	ok	0.12	0.1	3.90e-03	7.7	7.7	7.7	7.7	0.5	6.9	21.8	1.7	-1.9	6.5
640	ok	0.12	0.1	4.19e-03	7.7	7.7	7.7	7.7	-4.1	9.7	18.6	-2.4	-2.9	6.4
641	ok	0.12	0.1	3.60e-03	7.7	7.7	7.7	7.7	0.9	7.2	20.3	1.7	-2.0	6.4
642	ok	0.12	0.1	3.87e-03	7.7	7.7	7.7	7.7	-3.1	9.9	16.9	-1.9	-3.0	6.3
643	ok	0.12	0.1	3.15e-03	7.7	7.7	7.7	7.7	2.3	7.5	18.3	1.8	-2.2	6.2
644	ok	0.12	0.1	3.43e-03	7.7	7.7	7.7	7.7	-1.0	10.4	14.5	-1.9	-3.3	5.9
645	ok	0.12	0.1	2.52e-03	7.7	7.7	7.7	7.7	4.4	8.1	15.0	1.4	-2.8	5.5
646	ok	0.12	0.1	2.65e-03	7.7	7.7	7.7	7.7	0.2	11.3	10.4	-4.0	-4.5	4.8
647	ok	0.12	8.19e-02	1.53e-03	7.7	7.7	7.7	7.7	6.9	5.0	5.7	-4.1	-5.6	2.1
648	ok	0.12	0.1	2.04e-03	7.7	7.7	7.7	7.7	3.3	5.7	-0.9	-9.2	-8.4	-0.8
649	ok	0.12	0.1	3.25e-03	7.7	7.7	7.7	7.7	-1.1	1.7	-2.1	-3.2	-8.6	0.9
650	ok	0.12	0.1	1.28e-03	7.7	7.7	7.7	7.7	-0.8	4.9	2.8	-2.4	-8.8	-0.4
651	ok	0.12	0.2	4.14e-03	7.7	7.7	7.7	7.7	0.3	12.4	-14.5	-11.8	-13.0	-1.2
652	ok	0.12	0.1	2.44e-03	7.7	7.7	7.7	7.7	1.1	6.2	-11.3	-7.4	-10.8	-3.0
653	ok	0.12	0.1	2.70e-03	7.7	7.7	7.7	7.7	6.9	7.1	-9.9	-5.4	-9.1	-4.3
654	ok	0.12	0.1	3.42e-03	7.7	7.7	7.7	7.7	-3.1	3.1	-18.9	-0.7	-7.9	-5.8
655	ok	0.12	0.1	3.70e-03	7.7	7.7	7.7	7.7	1.7	5.7	-13.7	-2.2	-7.9	-5.9
656	ok	0.12	0.1	4.26e-03	7.7	7.7	7.7	7.7	-6.9	1.3	-21.3	-0.4	-7.5	-6.5
657	ok	0.12	0.1	4.39e-03	7.7	7.7	7.7	7.7	-1.8	4.1	-16.1	-2.1	-7.6	-6.4
658	ok	0.12	0.1	4.66e-03	7.7	7.7	7.7	7.7	-7.7	1.1	-22.7	-0.4	-7.3	-6.7
659	ok	0.12	0.1	4.69e-03	7.7	7.7	7.7	7.7	-2.8	3.8	-17.7	-2.2	-7.5	-6.5
660	ok	0.12	0.1	4.88e-03	7.7	7.7	7.7	7.7	-7.4	1.2	-23.9	-0.4	-7.2	-6.8
661	ok	0.12	0.1	4.86e-03	7.7	7.7	7.7	7.7	-2.3	3.6	-18.9	-2.3	-7.4	-6.6
662	ok	0.12	0.1	4.97e-03	7.7	7.7	7.7	7.7	-7.6	1.4	-25.2	-0.4	-7.1	-6.8
663	ok	0.12	0.1	4.90e-03	7.7	7.7	7.7	7.7	-1.8	4.0	-20.3	-2.2	-7.4	-6.6
664	ok	0.12	0.1	5.04e-03	7.7	7.7	7.7	7.7	-6.6	1.7	-26.1	-0.4	-7.1	-6.8
665	ok	0.12	0.1	4.94e-03	7.7	7.7	7.7	7.7	-1.8	4.2	-21.1	-2.2	-7.3	-6.7
666	ok	0.12	0.1	5.03e-03	7.7	7.7	7.7	7.7	-4.9	1.9	-26.6	-0.5	-7.1	-6.9
667	ok	0.12	0.1	4.87e-03	7.7	7.7	7.7	7.7	-4.98e-02	4.2	-21.7	-2.2	-7.3	-6.8
668	ok	0.12	0.1	4.92e-03	7.7	7.7	7.7	7.7	-2.5	1.9	-26.9	-0.5	-7.0	-7.0
669	ok	0.12	0.1	4.73e-03	7.7	7.7	7.7	7.7	2.5	4.3	-22.0	-2.2	-7.2	-6.8
670	ok	0.12	0.1	4.75e-03	7.7	7.7	7.7	7.7	1.3	2.0	-27.1	-0.5	-6.9	-7.0
671	ok	0.12	0.1	4.66e-03	7.7	7.7	7.7	7.7	6.1	4.4	-22.3	-2.2	-7.1	-6.8
672	ok	0.12	0.1	4.58e-03	7.7	7.7	7.7	7.7	4.1	2.0	-27.2	-0.8	-6.9	-7.0
673	ok	0.12	0.1	4.44e-03	7.7	7.7	7.7	7.7	9.2	4.3	-22.5	-2.7	-7.1	-6.9
674	ok	0.12	0.1	4.49e-03	7.7	7.7	7.7	7.7	6.8	2.0	-27.5	-0.8	-6.8	-7.0
675	ok	0.12	0.1	4.34e-03	7.7	7.7	7.7	7.7	11.6	4.7	-22.8	-2.6	-7.0	-6.9
676	ok	0.12	0.1	4.33e-03	7.7	7.7	7.7	7.7	9.3	2.2	-27.4	-0.9	-6.7	-7.0
677	ok	0.12	0.1	4.21e-03	7.7	7.7	7.7	7.7	13.9	4.9	-22.7	-2.6	-7.0	-6.8
678	ok	0.12	0.1	4.12e-03	7.7	7.7	7.7	7.7	11.8	2.6	-27.1	-0.8	-6.7	-7.0
679	ok	0.12	0.1	3.95e-03	7.7	7.7	7.7	7.7	16.6	4.9	-22.4	-2.5	-7.0	-6.8
680	ok	0.12	0.1	4.20e-03	7.7	7.7	7.7	7.7	15.6	2.7	-26.6	-0.9	-6.7	-7.0
681	ok	0.12	0.1	4.22e-03	7.7	7.7	7.7	7.7	13.9	4.9	23.3	-2.5	-7.0	6.8
682	ok	0.12	0.1	4.40e-03	7.7	7.7	7.7	7.7	9.3	2.5	27.9	-0.8	-6.8	6.9
683	ok	0.12	0.1	4.40e-03	7.7	7.7	7.7	7.7	11.2	4.7	23.5	-2.6	-7.0	6.8

684	ok	0.12	0.1	4.62e-03	7.7	7.7	7.7	7.7	6.6	2.0	28.2	-0.8	-6.8	6.9
685	ok	0.12	0.1	4.55e-03	7.7	7.7	7.7	7.7	8.8	4.2	23.1	-2.7	-7.1	6.8
686	ok	0.12	0.1	4.72e-03	7.7	7.7	7.7	7.7	3.7	2.0	27.8	-0.8	-6.8	6.9
687	ok	0.12	0.1	4.75e-03	7.7	7.7	7.7	7.7	5.4	4.3	22.9	-2.2	-7.1	6.7
688	ok	0.12	0.1	4.88e-03	7.7	7.7	7.7	7.7	0.7	1.9	27.6	-0.5	-6.9	6.9
689	ok	0.12	0.1	4.83e-03	7.7	7.7	7.7	7.7	1.8	4.3	22.5	-2.2	-7.2	6.7
690	ok	0.12	0.1	5.04e-03	7.7	7.7	7.7	7.7	-3.1	1.9	27.3	-0.5	-7.0	6.9
691	ok	0.12	0.1	4.95e-03	7.7	7.7	7.7	7.7	-0.8	4.2	22.0	-2.2	-7.3	6.7
692	ok	0.12	0.1	5.14e-03	7.7	7.7	7.7	7.7	-5.5	1.8	26.9	-0.4	-7.0	6.8
693	ok	0.12	0.1	5.01e-03	7.7	7.7	7.7	7.7	-2.5	4.2	21.4	-2.2	-7.3	6.6
694	ok	0.12	0.1	5.12e-03	7.7	7.7	7.7	7.7	-7.1	1.6	26.2	-0.4	-7.1	6.7
695	ok	0.12	0.1	4.95e-03	7.7	7.7	7.7	7.7	-2.3	4.0	20.5	-2.2	-7.4	6.5
696	ok	0.12	0.1	5.03e-03	7.7	7.7	7.7	7.7	-7.9	1.3	25.4	-0.4	-7.1	6.7
697	ok	0.12	0.1	4.89e-03	7.7	7.7	7.7	7.7	-2.6	3.6	19.1	-2.3	-7.4	6.5
698	ok	0.12	0.1	4.91e-03	7.7	7.7	7.7	7.7	-7.6	1.2	24.1	-0.4	-7.2	6.7
699	ok	0.12	0.1	4.71e-03	7.7	7.7	7.7	7.7	-3.0	3.8	17.9	-2.2	-7.5	6.4
700	ok	0.12	0.1	4.67e-03	7.7	7.7	7.7	7.7	-7.8	1.1	22.8	-0.4	-7.3	6.6
701	ok	0.12	0.1	4.40e-03	7.7	7.7	7.7	7.7	-2.0	4.1	16.3	-2.1	-7.6	6.3
702	ok	0.12	0.1	4.27e-03	7.7	7.7	7.7	7.7	-7.0	1.3	21.3	-0.4	-7.4	6.4
703	ok	0.12	0.1	3.71e-03	7.7	7.7	7.7	7.7	1.6	5.7	13.8	-2.2	-7.9	5.8
704	ok	0.12	0.1	3.43e-03	7.7	7.7	7.7	7.7	-3.1	3.1	19.0	-0.7	-7.9	5.7
705	ok	0.12	0.1	2.70e-03	7.7	7.7	7.7	7.7	6.8	7.0	9.9	-5.4	-9.0	4.2
706	ok	0.12	0.1	2.43e-03	7.7	7.7	7.7	7.7	1.1	6.2	11.2	-7.4	-10.8	2.9
707	ok	0.12	0.2	4.10e-03	7.7	7.7	7.7	7.7	0.3	12.3	14.4	-11.7	-12.9	1.2
708	ok	0.12	0.1	1.30e-03	7.7	7.7	7.7	7.7	-0.9	4.7	-2.8	-2.4	-8.8	0.3
709	ok	0.12	5.90e-02	7.89e-04	7.7	7.7	7.7	7.7	2.0	1.5	3.8	-3.2	-3.4	-0.9
710	ok	0.12	9.28e-02	1.15e-03	7.7	7.7	7.7	7.7	3.9	-6.1	-2.4	-7.7	-2.6	-1.4
711	ok	0.12	0.1	7.70e-04	7.7	7.7	7.7	7.7	6.6	0.2	-2.1	-8.0	-2.9	-2.2
712	ok	0.12	8.90e-02	1.07e-03	7.7	7.7	7.7	7.7	3.5	2.4	-3.3	-4.9	-2.1	-3.8
713	ok	0.12	9.46e-02	1.58e-03	7.7	7.7	7.7	7.7	9.3	-2.9	-1.5	-2.4	-2.7	-3.0
714	ok	0.12	9.84e-02	1.90e-03	7.7	7.7	7.7	7.7	-4.0	2.2	-0.7	0.3	-1.3	-5.3
715	ok	0.12	0.1	2.27e-03	7.7	7.7	7.7	7.7	-6.5	-0.7	1.5	6.25e-02	-1.5	-5.3
716	ok	0.12	0.1	2.24e-03	7.7	7.7	7.7	7.7	-7.4	2.3	0.9	0.2	-1.1	-5.6
717	ok	0.12	0.1	2.40e-03	7.7	7.7	7.7	7.7	-8.2	-0.8	1.4	-6.02e-03	-1.4	-5.6
718	ok	0.12	0.1	2.24e-03	7.7	7.7	7.7	7.7	-7.9	2.2	1.1	0.2	-1.0	-5.7
719	ok	0.12	0.1	2.32e-03	7.7	7.7	7.7	7.7	-8.2	-2.6	1.5	-5.06e-02	-1.3	-5.7
720	ok	0.12	0.1	2.07e-03	7.7	7.7	7.7	7.7	-7.4	2.0	1.2	7.37e-02	-0.9	-5.9
721	ok	0.12	0.1	2.13e-03	7.7	7.7	7.7	7.7	-7.6	-2.5	1.4	-0.1	-1.3	-5.7
722	ok	0.12	0.1	1.91e-03	7.7	7.7	7.7	7.7	-6.8	1.9	1.0	4.92e-02	-0.9	-5.9
723	ok	0.12	0.1	1.89e-03	7.7	7.7	7.7	7.7	-8.2	-2.5	1.5	-0.1	-1.2	-5.8
724	ok	0.12	0.1	1.69e-03	7.7	7.7	7.7	7.7	-7.4	1.8	1.1	6.69e-02	-0.8	-5.9
725	ok	0.12	0.1	1.62e-03	7.7	7.7	7.7	7.7	-6.9	-2.5	1.6	-0.1	-1.1	-5.8
726	ok	0.12	0.1	1.33e-03	7.7	7.7	7.7	7.7	-5.4	1.7	1.3	4.36e-02	-0.7	-6.0
727	ok	0.12	0.1	1.19e-03	7.7	7.7	7.7	7.7	-4.4	-2.5	1.6	-0.2	-1.1	-5.9
728	ok	0.12	0.1	8.15e-04	7.7	7.7	7.7	7.7	-2.4	1.6	1.3	9.04e-03	-0.7	-6.0
729	ok	0.12	0.1	7.05e-04	7.7	7.7	7.7	7.7	-1.0	-2.4	1.7	-0.2	-1.0	-5.9
730	ok	0.12	0.1	2.79e-04	7.7	7.7	7.7	7.7	2.1	1.4	1.4	-5.61e-03	-0.6	-6.1
731	ok	0.12	9.92e-02	5.12e-04	7.7	7.7	7.7	7.7	3.2	-2.3	1.7	-0.2	-1.0	-6.0
732	ok	0.12	9.72e-02	1.76e-04	7.7	7.7	7.7	7.7	5.4	1.51e-03	1.4	-0.1	-0.5	-6.1
733	ok	0.12	9.49e-02	4.91e-04	7.7	7.7	7.7	7.7	6.4	-2.1	1.6	-0.3	-0.9	-6.0
734	ok	0.12	9.16e-02	9.76e-05	7.7	7.7	7.7	7.7	8.1	0.3	1.2	-0.1	-0.5	-6.1
735	ok	0.12	8.92e-02	4.81e-04	7.7	7.7	7.7	7.7	9.0	-2.1	1.6	-0.2	-0.8	-6.0
736	ok	0.12	8.61e-02	8.77e-05	7.7	7.7	7.7	7.7	10.7	0.4	1.3	-9.11e-02	-0.4	-6.1
737	ok	0.12	8.51e-02	4.84e-04	7.7	7.7	7.7	7.7	13.5	-1.6	2.6	-0.2	-0.8	-4.9
738	ok	0.12	8.23e-02	9.03e-05	7.7	7.7	7.7	7.7	13.9	0.5	1.4	-0.1	-0.3	-6.1
739	ok	0.12	8.47e-02	4.81e-04	7.7	7.7	7.7	7.7	14.0	-1.6	-2.6	-0.2	-0.8	4.8
740	ok	0.12	8.58e-02	9.27e-05	7.7	7.7	7.7	7.7	10.7	0.4	-1.3	-8.89e-02	-0.4	6.1
741	ok	0.12	8.84e-02	4.79e-04	7.7	7.7	7.7	7.7	22.0	-1.4	2.6	-0.4	-0.7	-4.8
742	ok	0.12	9.08e-02	1.01e-04	7.7	7.7	7.7	7.7	7.6	0.2	-1.2	-0.1	-0.5	6.1
743	ok	0.12	9.45e-02	4.88e-04	7.7	7.7	7.7	7.7	7.3	-1.6	-2.4	-0.2	-0.9	4.8
744	ok	0.12	9.71e-02	1.71e-04	7.7	7.7	7.7	7.7	5.0	2.71e-02	-1.4	-0.1	-0.5	6.1
745	ok	0.12	9.88e-02	5.10e-04	7.7	7.7	7.7	7.7	2.7	-2.2	-1.7	-0.2	-1.0	5.9
746	ok	0.12	9.97e-02	3.35e-04	7.7	7.7	7.7	7.7	1.5	1.4	-1.4	1.21e-02	-0.6	6.0
747	ok	0.12	0.1	7.73e-04	7.7	7.7	7.7	7.7	-1.5	-2.4	-1.7	-0.2	-1.0	5.9
748	ok	0.12	0.1	9.10e-04	7.7	7.7	7.7	7.7	-3.0	1.6	-1.3	3.31e-02	-0.7	6.0
749	ok	0.12	0.1	1.29e-03	7.7	7.7	7.7	7.7	-5.0	-2.5	-1.6	-0.1	-1.1	5.8
750	ok	0.12	0.1	1.43e-03	7.7	7.7	7.7	7.7	-6.1	1.7	-1.3	6.61e-02	-0.7	5.9
751	ok	0.12	0.1	1.72e-03	7.7	7.7	7.7	7.7	-7.6	-2.5	-1.6	-0.1	-1.1	5.8
752	ok	0.12	0.1	1.79e-03	7.7	7.7	7.7	7.7	-8.0	1.8	-1.1	8.71e-02	-0.8	5.9
753	ok	0.12	0.1	1.98e-03	7.7	7.7	7.7	7.7	-8.8	-2.5	-1.5	-9.94e-02	-1.2	5.7
754	ok	0.12	0.1	1.99e-03	7.7	7.7	7.7	7.7	-8.7	1.9	-1.0	6.07e-02	-0.9	5.8
755	ok	0.12	0.1	2.18e-03	7.7	7.7	7.7	7.7	-8.0	-2.5	-1.4	-0.1	-1.3	5.7
756	ok	0.12	0.1	2.10e-03	7.7	7.7	7.7	7.7	-7.7	2.0	-1.2	6.52e-02	-0.9	5.8
757	ok	0.12	0.1	2.35e-03	7.7	7.7	7.7	7.7	-8.5	-2.6	-1.5	-5.49e-02	-1.3	5.6
758	ok	0.12	0.1	2.26e-03	7.7	7.7	7.7	7.7	-8.1	2.2	-1.1	0.2	-1.0	5.7
759	ok	0.12	0.1	2.42e-03	7.7	7.7	7.7	7.7	-8.4	-0.8	-1.4	-9.68e-04	-1.4	5.5
760	ok	0.12	0.1	2.26e-03	7.7	7.7	7.7	7.7	-7.6	2.3	-0.9	0.2	-1.1	5.6
761	ok	0.12	0.1	2.28e-03	7.7	7.7	7.7	7.7	-6.6	-0.7	-1.5	6.73e-02	-1.5	5.3
762	ok	0.12	9.88e-02	1.92e-03	7.7	7.7	7.7	7.7	-4.0	2.2	0.7	0.3	-1.4	5.2

763	ok	0.12	9.48e-02	1.60e-03	7.7	7.7	7.7	7.7	9.3	-2.9	1.5	-2.4	-2.7	3.0
764	ok	0.12	8.91e-02	1.08e-03	7.7	7.7	7.7	7.7	3.5	2.4	3.3	-4.9	-2.1	3.8
765	ok	0.12	0.1	7.81e-04	7.7	7.7	7.7	7.7	6.5	0.2	2.0	-8.0	-2.9	2.2
766	ok	0.12	9.18e-02	1.15e-03	7.7	7.7	7.7	7.7	3.8	-6.2	2.4	-7.6	-2.6	1.4
767	ok	0.12	5.83e-02	7.79e-04	7.7	7.7	7.7	7.7	1.9	-0.6	-3.8	-3.2	-3.4	0.9

Nodo	x/d	V N/M	ver. rid	Af pr-	Af pr+	Af sec-	Af sec+	N x	N y	N xy	M x	M y	M xy
								-30.06	-70.90	-30.09	-36.24	-63.55	-10.64
	0.12	0.64	0.01	7.70	7.70	7.70	7.70	25.39	47.20	30.23	14.30	47.91	9.86

Nodo	Stato	Max tau	Ver V pr	Ver V sec	Af V pr	Af V sec	V pr	V sec
		daN/cm2					kN/ m	kN/ m
1	ok	0.0						
2	ok	0.0						
3	ok	0.0						
4	ok	1.46						
5	ok	1.05						
6	ok	0.78						
7	ok	0.76						
8	ok	1.06						
9	ok	1.35						
10	ok	1.60						
11	ok	0.0						
12	ok	0.0						
13	ok	0.0						
14	ok	1.91						
15	ok	1.65						
16	ok	1.43						
17	ok	1.19						
18	ok	1.03						
19	ok	1.25						
20	ok	1.50						
21	ok	1.73						
22	ok	1.92						
23	ok	0.0						
24	ok	0.0						
25	ok	0.0						
26	ok	1.92						
27	ok	1.72						
28	ok	1.49						
29	ok	1.24						
30	ok	1.03						
31	ok	1.26						
32	ok	1.50						
33	ok	1.73						
34	ok	1.93						
35	ok	0.0						
36	ok	0.0						
37	ok	0.0						
38	ok	1.91						
39	ok	1.72						
40	ok	1.49						
41	ok	1.24						
42	ok	1.01						
43	ok	1.20						
44	ok	1.44						
45	ok	1.66						
46	ok	1.91						
47	ok	0.0						
48	ok	0.0						
49	ok	0.0						
50	ok	1.59						
51	ok	1.34						
52	ok	1.05						
53	ok	0.75						
54	ok	0.78						
55	ok	1.05						
56	ok	1.46						
57	ok	0.0						
58	ok	0.0						
59	ok	0.0						
60	ok	0.0						
61	ok	0.0						
62	ok	0.0						
63	ok	0.52						
64	ok	0.48						
65	ok	0.48						

66	ok	0.48
67	ok	0.47
68	ok	0.50
69	ok	0.57
70	ok	0.0
71	ok	0.0
72	ok	0.0
73	ok	0.60
74	ok	0.50
75	ok	0.47
76	ok	0.46
77	ok	0.44
78	ok	0.44
79	ok	0.45
80	ok	0.50
81	ok	0.57
82	ok	0.0
83	ok	0.0
84	ok	0.0
85	ok	0.60
86	ok	0.49
87	ok	0.45
88	ok	0.43
89	ok	0.42
90	ok	0.43
91	ok	0.45
92	ok	0.49
93	ok	0.60
94	ok	0.0
95	ok	0.0
96	ok	0.0
97	ok	0.57
98	ok	0.49
99	ok	0.44
100	ok	0.44
101	ok	0.44
102	ok	0.46
103	ok	0.47
104	ok	0.50
105	ok	0.60
106	ok	0.0
107	ok	0.0
108	ok	0.0
109	ok	0.57
110	ok	0.49
111	ok	0.47
112	ok	0.48
113	ok	0.48
114	ok	0.48
115	ok	0.52
116	ok	0.0
117	ok	0.0
118	ok	0.0
119	ok	0.0
120	ok	0.0
121	ok	0.0
122	ok	0.69
123	ok	0.71
124	ok	0.76
125	ok	0.73
126	ok	0.75
127	ok	0.69
128	ok	0.72
129	ok	0.0
130	ok	0.0
131	ok	0.0
132	ok	0.70
133	ok	0.68
134	ok	0.74
135	ok	0.72
136	ok	0.75
137	ok	0.71
138	ok	0.73
139	ok	0.67
140	ok	0.76
141	ok	0.0
142	ok	0.0
143	ok	0.0
144	ok	0.74

145	ok	0.66
146	ok	0.71
147	ok	0.68
148	ok	0.72
149	ok	0.68
150	ok	0.71
151	ok	0.66
152	ok	0.74
153	ok	0.0
154	ok	0.0
155	ok	0.0
156	ok	0.76
157	ok	0.67
158	ok	0.73
159	ok	0.71
160	ok	0.75
161	ok	0.72
162	ok	0.74
163	ok	0.68
164	ok	0.70
165	ok	0.0
166	ok	0.0
167	ok	0.0
168	ok	0.72
169	ok	0.69
170	ok	0.75
171	ok	0.72
172	ok	0.76
173	ok	0.70
174	ok	0.68
175	ok	0.0
176	ok	0.0
177	ok	0.0
178	ok	1.37
179	ok	0.97
180	ok	1.15
181	ok	0.92
182	ok	1.19
183	ok	0.99
184	ok	1.21
185	ok	0.97
186	ok	1.13
187	ok	0.84
188	ok	1.01
189	ok	0.87
190	ok	1.01
191	ok	0.82
192	ok	1.10
193	ok	0.95
194	ok	1.18
195	ok	0.98
196	ok	1.18
197	ok	0.94
198	ok	1.09
199	ok	0.81
200	ok	0.96
201	ok	0.84
202	ok	0.95
203	ok	0.78
204	ok	1.05
205	ok	0.91
206	ok	1.13
207	ok	0.94
208	ok	1.13
209	ok	0.91
210	ok	1.05
211	ok	0.78
212	ok	0.95
213	ok	0.84
214	ok	0.96
215	ok	0.81
216	ok	1.09
217	ok	0.94
218	ok	1.18
219	ok	0.98
220	ok	1.18
221	ok	0.94
222	ok	1.10
223	ok	0.81

224	ok	1.01						
225	ok	0.87						
226	ok	1.01						
227	ok	0.83						
228	ok	1.12						
229	ok	0.96						
230	ok	1.20						
231	ok	0.99						
232	ok	1.18						
233	ok	0.91						
234	ok	1.14						
235	ok	0.96						
236	ok	1.37						
237	ok	1.17						
238	ok	2.17						
239	ok	1.12						
240	ok	1.75						
241	ok	1.24						
242	ok	1.78						
243	ok	1.25						
244	ok	1.73						
245	ok	1.16						
246	ok	1.63						
247	ok	1.02						
248	ok	1.79						
249	ok	1.02						
250	ok	1.60						
251	ok	1.16						
252	ok	1.69						
253	ok	1.26						
254	ok	1.72						
255	ok	1.25						
256	ok	1.67						
257	ok	1.15						
258	ok	1.57						
259	ok	1.00						
260	ok	1.71						
261	ok	1.00						
262	ok	1.53						
263	ok	1.13						
264	ok	1.62						
265	ok	1.22						
266	ok	1.65						
267	ok	1.22						
268	ok	1.61						
269	ok	1.13						
270	ok	1.53						
271	ok	0.99						
272	ok	1.71						
273	ok	1.00						
274	ok	1.57						
275	ok	1.15						
276	ok	1.67						
277	ok	1.25						
278	ok	1.72						
279	ok	1.25						
280	ok	1.68						
281	ok	1.16						
282	ok	1.60						
283	ok	1.02						
284	ok	1.79						
285	ok	1.02						
286	ok	1.62						
287	ok	1.16						
288	ok	1.72						
289	ok	1.24						
290	ok	1.77						
291	ok	1.24						
292	ok	1.75						
293	ok	1.12						
294	ok	2.16						
295	ok	1.18						
296	ok	2.13						
297	ok	3.07						
298	ok	2.03						
299	ok Av	5.05	0.06	0.22	1.4	5.6	42.2	165.3
300	ok	2.33						
301	ok Av	5.33	0.06	0.24	1.4	5.9	40.9	174.5
302	ok	2.40						

303	ok Av	5.18	0.06	0.23	1.4	5.7	40.5	170.0
304	ok	2.37						
305	ok Av	4.71	0.05	0.21	1.3	5.2	38.8	154.6
306	ok	2.05						
307	ok	3.07						
308	ok	2.11						
309	ok Av	4.67	0.05	0.21	1.3	5.2	37.3	152.9
310	ok	2.29						
311	ok Av	5.13	0.05	0.23	1.4	5.7	40.3	167.9
312	ok	2.29						
313	ok Av	5.23	0.06	0.23	1.4	5.8	42.5	171.4
314	ok	2.31						
315	ok Av	5.08	0.06	0.23	1.4	5.6	41.4	166.3
316	ok	2.29						
317	ok Av	4.58	0.05	0.20	1.3	5.1	38.9	150.0
318	ok	1.97						
319	ok	3.03						
320	ok	2.04						
321	ok Av	4.48	0.05	0.20	1.3	5.0	37.2	146.5
322	ok	2.22						
323	ok Av	4.91	0.05	0.22	1.3	5.4	39.8	160.7
324	ok	2.24						
325	ok Av	5.03	0.06	0.22	1.4	5.5	41.0	163.9
326	ok	2.24						
327	ok Av	4.90	0.05	0.22	1.3	5.4	39.8	160.4
328	ok	2.22						
329	ok Av	4.46	0.05	0.20	1.2	4.9	37.0	145.9
330	ok	2.05						
331	ok	3.03						
332	ok	1.96						
333	ok Av	4.57	0.05	0.20	1.3	5.1	38.7	149.7
334	ok	2.28						
335	ok Av	5.07	0.06	0.23	1.4	5.6	41.2	165.9
336	ok	2.30						
337	ok Av	5.22	0.06	0.23	1.4	5.8	42.3	170.9
338	ok	2.29						
339	ok Av	5.11	0.05	0.23	1.4	5.7	40.1	167.4
340	ok	2.29						
341	ok Av	4.65	0.05	0.21	1.3	5.2	37.1	152.4
342	ok	2.11						
343	ok	3.06						
344	ok	2.05						
345	ok Av	4.69	0.05	0.21	1.3	5.2	38.5	153.9
346	ok	2.36						
347	ok Av	5.16	0.05	0.23	1.4	5.7	40.2	169.3
348	ok	2.39						
349	ok Av	5.31	0.06	0.24	1.4	5.9	40.6	173.8
350	ok	2.32						
351	ok Av	5.03	0.06	0.22	1.4	5.6	41.9	164.6
352	ok	2.03						
353	ok	3.05						
354	ok	2.13						
355	ok	1.98						
356	ok	3.09						
357	ok	2.38						
358	ok Av	5.76	0.11	0.24	2.8	6.0	81.6	177.7
359	ok	2.73						
360	ok Av	6.09	0.12	0.25	3.0	6.3	88.8	186.0
361	ok	2.84						
362	ok Av	5.92	0.12	0.25	3.0	6.1	87.3	181.1
363	ok	2.82						
364	ok Av	5.40	0.11	0.23	2.6	5.6	77.8	166.3
365	ok	2.38						
366	ok	3.30						
367	ok	2.27						
368	ok Av	5.41	0.11	0.23	2.7	5.6	81.0	165.7
369	ok	2.69						
370	ok Av	5.93	0.12	0.24	3.0	6.1	89.2	180.2
371	ok	2.68						
372	ok Av	6.07	0.13	0.25	3.1	6.2	92.9	183.9
373	ok	2.73						
374	ok Av	5.89	0.12	0.24	3.0	6.0	89.6	178.5
375	ok	2.72						
376	ok Av	5.32	0.11	0.22	2.7	5.5	78.4	162.6
377	ok	2.31						
378	ok	3.27						
379	ok	2.23						
380	ok Av	5.21	0.11	0.22	2.7	5.4	79.2	159.2
381	ok	2.63						

382	ok Av	5.74	0.12	0.24	2.9	5.8	87.2	172.9
383	ok	2.64						
384	ok Av	5.90	0.12	0.24	3.1	6.0	90.5	176.5
385	ok	2.64						
386	ok Av	5.73	0.12	0.23	2.9	5.8	87.1	172.6
387	ok	2.63						
388	ok Av	5.18	0.11	0.22	2.7	5.4	78.8	158.5
389	ok	2.22						
390	ok	3.26						
391	ok	2.30						
392	ok Av	5.30	0.11	0.22	2.6	5.5	78.1	162.2
393	ok	2.71						
394	ok Av	5.87	0.12	0.24	3.0	6.0	89.2	178.1
395	ok	2.72						
396	ok Av	6.05	0.13	0.25	3.1	6.2	92.5	183.4
397	ok	2.68						
398	ok Av	5.91	0.12	0.24	3.0	6.1	88.7	179.5
399	ok	2.69						
400	ok Av	5.39	0.11	0.22	2.7	5.6	80.5	165.1
401	ok	2.26						
402	ok	3.28						
403	ok	2.37						
404	ok Av	5.37	0.10	0.23	2.6	5.6	77.2	165.6
405	ok	2.81						
406	ok Av	5.89	0.12	0.25	2.9	6.1	86.7	180.3
407	ok	2.83						
408	ok Av	6.06	0.12	0.25	3.0	6.3	88.2	185.1
409	ok	2.72						
410	ok Av	5.73	0.11	0.24	2.7	6.0	81.1	176.8
411	ok	2.37						
412	ok	3.07						
413	ok	1.98						
414	ok	1.81						
415	ok	2.64						
416	ok	1.56						
417	ok	2.76						
418	ok	1.55						
419	ok	2.90						
420	ok	1.51						
421	ok	2.88						
422	ok	1.47						
423	ok	2.76						
424	ok	1.44						
425	ok	2.68						
426	ok	1.38						
427	ok	2.74						
428	ok	1.38						
429	ok	2.87						
430	ok	1.37						
431	ok	2.91						
432	ok	1.35						
433	ok	2.85						
434	ok	1.34						
435	ok	2.70						
436	ok	1.38						
437	ok	2.59						
438	ok	1.33						
439	ok	2.63						
440	ok	1.34						
441	ok	2.74						
442	ok	1.32						
443	ok	2.79						
444	ok	1.32						
445	ok	2.74						
446	ok	1.34						
447	ok	2.63						
448	ok	1.33						
449	ok	2.58						
450	ok	1.38						
451	ok	2.70						
452	ok	1.34						
453	ok	2.85						
454	ok	1.35						
455	ok	2.90						
456	ok	1.36						
457	ok	2.86						
458	ok	1.38						
459	ok	2.73						
460	ok	1.37						

461	ok	2.67
462	ok	1.43
463	ok	2.75
464	ok	1.47
465	ok	2.86
466	ok	1.51
467	ok	2.88
468	ok	1.55
469	ok	2.75
470	ok	1.55
471	ok	2.63
472	ok	1.79
473	ok	2.25
474	ok	1.25
475	ok	1.67
476	ok	1.42
477	ok	1.75
478	ok	1.49
479	ok	1.75
480	ok	1.47
481	ok	1.72
482	ok	1.40
483	ok	1.67
484	ok	1.32
485	ok	1.66
486	ok	1.39
487	ok	1.69
488	ok	1.42
489	ok	1.71
490	ok	1.44
491	ok	1.71
492	ok	1.42
493	ok	1.66
494	ok	1.38
495	ok	1.62
496	ok	1.31
497	ok	1.60
498	ok	1.34
499	ok	1.63
500	ok	1.38
501	ok	1.65
502	ok	1.40
503	ok	1.65
504	ok	1.38
505	ok	1.62
506	ok	1.34
507	ok	1.60
508	ok	1.30
509	ok	1.61
510	ok	1.38
511	ok	1.66
512	ok	1.42
513	ok	1.70
514	ok	1.43
515	ok	1.71
516	ok	1.41
517	ok	1.68
518	ok	1.39
519	ok	1.65
520	ok	1.32
521	ok	1.66
522	ok	1.40
523	ok	1.71
524	ok	1.47
525	ok	1.75
526	ok	1.48
527	ok	1.74
528	ok	1.41
529	ok	1.66
530	ok	1.25
531	ok	2.25
532	ok	1.57
533	ok	0.60
534	ok	0.82
535	ok	0.51
536	ok	0.87
537	ok	0.53
538	ok	0.87
539	ok	0.51

540	ok	0.85
541	ok	0.51
542	ok	0.83
543	ok	0.53
544	ok	0.83
545	ok	0.49
546	ok	0.84
547	ok	0.51
548	ok	0.85
549	ok	0.51
550	ok	0.85
551	ok	0.51
552	ok	0.83
553	ok	0.50
554	ok	0.82
555	ok	0.51
556	ok	0.82
557	ok	0.49
558	ok	0.83
559	ok	0.50
560	ok	0.84
561	ok	0.50
562	ok	0.84
563	ok	0.49
564	ok	0.83
565	ok	0.49
566	ok	0.81
567	ok	0.51
568	ok	0.82
569	ok	0.50
570	ok	0.83
571	ok	0.51
572	ok	0.84
573	ok	0.51
574	ok	0.85
575	ok	0.50
576	ok	0.84
577	ok	0.49
578	ok	0.83
579	ok	0.53
580	ok	0.83
581	ok	0.51
582	ok	0.84
583	ok	0.51
584	ok	0.86
585	ok	0.53
586	ok	0.86
587	ok	0.51
588	ok	0.82
589	ok	0.60
590	ok	1.57
591	ok	1.16
592	ok	0.91
593	ok	1.01
594	ok	0.61
595	ok	0.88
596	ok	0.54
597	ok	0.88
598	ok	0.55
599	ok	0.87
600	ok	0.55
601	ok	0.88
602	ok	0.54
603	ok	0.87
604	ok	0.53
605	ok	0.86
606	ok	0.54
607	ok	0.86
608	ok	0.53
609	ok	0.85
610	ok	0.53
611	ok	0.85
612	ok	0.53
613	ok	0.86
614	ok	0.52
615	ok	0.86
616	ok	0.51
617	ok	0.84
618	ok	0.52

619	ok	0.84
620	ok	0.51
621	ok	0.84
622	ok	0.52
623	ok	0.85
624	ok	0.52
625	ok	0.86
626	ok	0.52
627	ok	0.86
628	ok	0.53
629	ok	0.85
630	ok	0.53
631	ok	0.85
632	ok	0.53
633	ok	0.86
634	ok	0.53
635	ok	0.86
636	ok	0.53
637	ok	0.86
638	ok	0.54
639	ok	0.88
640	ok	0.55
641	ok	0.87
642	ok	0.55
643	ok	0.87
644	ok	0.54
645	ok	0.87
646	ok	0.60
647	ok	1.01
648	ok	0.91
649	ok	1.17
650	ok	1.12
651	ok	2.06
652	ok	0.91
653	ok	0.85
654	ok	0.49
655	ok	0.85
656	ok	0.53
657	ok	0.87
658	ok	0.53
659	ok	0.87
660	ok	0.53
661	ok	0.88
662	ok	0.52
663	ok	0.87
664	ok	0.52
665	ok	0.86
666	ok	0.52
667	ok	0.86
668	ok	0.51
669	ok	0.85
670	ok	0.51
671	ok	0.84
672	ok	0.51
673	ok	0.85
674	ok	0.49
675	ok	0.84
676	ok	0.50
677	ok	0.83
678	ok	0.49
679	ok	0.83
680	ok	0.49
681	ok	0.83
682	ok	0.50
683	ok	0.84
684	ok	0.49
685	ok	0.85
686	ok	0.50
687	ok	0.84
688	ok	0.51
689	ok	0.85
690	ok	0.51
691	ok	0.85
692	ok	0.51
693	ok	0.86
694	ok	0.52
695	ok	0.86
696	ok	0.51
697	ok	0.87

698	ok	0.53
699	ok	0.86
700	ok	0.53
701	ok	0.87
702	ok	0.53
703	ok	0.85
704	ok	0.49
705	ok	0.85
706	ok	0.90
707	ok	2.04
708	ok	1.12
709	ok	1.10
710	ok	1.14
711	ok	1.26
712	ok	1.45
713	ok	1.48
714	ok	1.58
715	ok	1.54
716	ok	1.61
717	ok	1.57
718	ok	1.63
719	ok	1.60
720	ok	1.64
721	ok	1.60
722	ok	1.64
723	ok	1.59
724	ok	1.64
725	ok	1.60
726	ok	1.65
727	ok	1.61
728	ok	1.65
729	ok	1.62
730	ok	1.66
731	ok	1.63
732	ok	1.66
733	ok	1.63
734	ok	1.65
735	ok	1.61
736	ok	1.64
737	ok	1.61
738	ok	1.64
739	ok	1.61
740	ok	1.63
741	ok	1.60
742	ok	1.64
743	ok	1.61
744	ok	1.65
745	ok	1.61
746	ok	1.64
747	ok	1.60
748	ok	1.64
749	ok	1.59
750	ok	1.63
751	ok	1.59
752	ok	1.62
753	ok	1.58
754	ok	1.63
755	ok	1.59
756	ok	1.63
757	ok	1.58
758	ok	1.61
759	ok	1.55
760	ok	1.59
761	ok	1.53
762	ok	1.56
763	ok	1.47
764	ok	1.43
765	ok	1.27
766	ok	1.14
767	ok	1.09

Nodo	Max tau	Ver V pr	Ver V sec	Af V pr	Af V sec	V pr	V sec
	6.09	0.13	0.25	3.14	6.29	92.88	185.99

Nodo	Stato	V 6.50	V 6.53	Beta	f. a fon	f. Uout	Aw tot	Asw,min	n. x serie	n.ser 0(R)	n.ser 90	Rif. cmb
							cm2	cm2				
61	ok	0.04	0.03	1.84	2.00	0.0	0.0	0.0	0	0	0	147

71	ok	0.07	0.05	1.03	2.00	0.0	0.0	0.0	0	0	0	30
83	ok	0.08	0.06	1.01	2.00	0.0	0.0	0.0	0	0	0	30
95	ok	0.08	0.06	1.01	2.00	0.0	0.0	0.0	0	0	0	30
107	ok	0.07	0.05	1.02	2.00	0.0	0.0	0.0	0	0	0	30
117	ok	0.04	0.03	1.84	2.00	0.0	0.0	0.0	0	0	0	137

Macro Guscio	Spessore	Id Materiale	Id Criterio	Progettazione
	cm			
32	15.00	1	1	Singolo elemento

Nodo	Stato	x/d	V N/M	ver. rid	Af pr-	Af pr+	Af sec-	Af sec+	N x	N y	N xy	M x	M y	M xy
									kN/ m	kN/ m	kN/ m	kN	kN	kN
1190	ok	0.23	0.3	3.27e-03	4.7	4.7	4.7	4.7	-5.4	4.3	3.6	5.7	0.6	-2.84e-02
1191	ok	0.23	0.3	3.53e-03	4.7	4.7	4.7	4.7	-8.6	-0.7	-0.2	4.5	1.0	-0.6
1192	ok	0.23	0.2	3.95e-03	4.7	4.7	4.7	4.7	-1.9	4.3	3.0	4.3	0.8	-0.2
1193	ok	0.23	0.2	2.89e-03	4.7	4.7	4.7	4.7	-5.5	-0.3	1.2	-3.9	-0.6	-0.4
1194	ok	0.23	0.2	2.84e-03	4.7	4.7	4.7	4.7	0.8	4.8	3.2	4.5	0.9	-0.2
1195	ok	0.23	0.2	2.74e-03	4.7	4.7	4.7	4.7	-4.1	-0.4	1.2	-4.0	-0.6	-0.4
1196	ok	0.23	0.3	2.12e-03	4.7	4.7	4.7	4.7	1.1	4.9	3.2	4.5	0.9	-0.2
1197	ok	0.23	0.2	2.67e-03	4.7	4.7	4.7	4.7	-2.9	-1.0	1.2	-4.0	-0.6	-0.4
1198	ok	0.23	0.3	1.75e-03	4.7	4.7	4.7	4.7	1.9	4.7	3.2	4.6	0.9	-0.2
1199	ok	0.23	0.2	2.81e-03	4.7	4.7	4.7	4.7	-1.9	-1.2	1.1	-4.6	-0.6	-0.4
1200	ok	0.23	0.3	1.43e-03	4.7	4.7	4.7	4.7	1.3	4.7	3.1	5.0	1.0	3.57e-02
1201	ok	0.23	0.3	2.60e-03	4.7	4.7	4.7	4.7	-2.0	-2.5	2.2	-4.2	-0.7	-0.5
1202	ok	0.23	0.3	1.50e-03	4.7	4.7	4.7	4.7	2.2	4.7	3.3	4.5	0.9	-0.2
1203	ok	0.23	0.2	2.66e-03	4.7	4.7	4.7	4.7	-1.9	-1.1	1.2	-4.2	-0.7	-0.4
1204	ok	0.23	0.3	1.41e-03	4.7	4.7	4.7	4.7	1.6	4.9	3.3	4.6	0.9	-0.2
1205	ok	0.23	0.2	2.68e-03	4.7	4.7	4.7	4.7	-2.0	-1.1	1.2	-4.3	-0.7	-0.4
1206	ok	0.23	0.3	1.33e-03	4.7	4.7	4.7	4.7	1.5	5.0	3.2	4.6	1.0	-0.2
1207	ok	0.23	0.2	2.67e-03	4.7	4.7	4.7	4.7	-1.6	-1.0	1.1	-4.3	-0.7	-0.4
1208	ok	0.23	0.3	1.25e-03	4.7	4.7	4.7	4.7	2.3	4.8	3.1	4.6	1.0	-0.2
1209	ok	0.23	0.2	2.48e-03	4.7	4.7	4.7	4.7	-0.6	-1.0	1.1	-4.3	-0.7	-0.4
1210	ok	0.23	0.3	1.05e-03	4.7	4.7	4.7	4.7	3.8	4.5	3.1	4.6	0.9	-0.2
1211	ok	0.23	0.3	2.52e-03	4.7	4.7	4.7	4.7	0.2	-0.9	1.0	-4.9	-0.7	-0.4
1212	ok	0.23	0.3	7.98e-04	4.7	4.7	4.7	4.7	3.6	4.3	3.0	5.0	1.0	2.54e-02
1213	ok	0.23	0.3	2.50e-03	4.7	4.7	4.7	4.7	0.3	-2.5	2.0	-4.5	-0.7	-0.5
1214	ok	0.23	0.3	9.93e-04	4.7	4.7	4.7	4.7	4.5	4.5	3.3	4.5	0.9	-0.2
1215	ok	0.23	0.2	2.56e-03	4.7	4.7	4.7	4.7	0.5	-1.0	1.1	-4.4	-0.7	-0.4
1216	ok	0.23	0.3	9.82e-04	4.7	4.7	4.7	4.7	3.9	4.7	3.2	4.5	0.9	-0.2
1217	ok	0.23	0.2	2.66e-03	4.7	4.7	4.7	4.7	0.6	-1.0	1.1	-4.4	-0.7	-0.4
1218	ok	0.23	0.3	1.02e-03	4.7	4.7	4.7	4.7	3.7	4.8	3.2	4.5	0.9	-0.2
1219	ok	0.23	0.2	2.66e-03	4.7	4.7	4.7	4.7	0.9	-0.9	1.1	-4.4	-0.7	-0.4
1220	ok	0.23	0.3	9.89e-04	4.7	4.7	4.7	4.7	4.1	4.7	3.0	4.5	0.9	-0.2
1221	ok	0.23	0.2	2.59e-03	4.7	4.7	4.7	4.7	1.5	-0.8	1.0	-4.4	-0.7	-0.4
1222	ok	0.23	0.3	9.76e-04	4.7	4.7	4.7	4.7	5.6	4.4	3.0	4.5	0.9	-0.2
1223	ok	0.23	0.3	2.51e-03	4.7	4.7	4.7	4.7	2.3	-1.0	1.0	-4.9	-0.7	-0.4
1224	ok	0.23	0.3	7.91e-04	4.7	4.7	4.7	4.7	5.3	4.3	3.1	4.7	1.0	1.03e-02
1225	ok	0.23	0.3	2.53e-03	4.7	4.7	4.7	4.7	9.35e-02	-0.9	-1.0	-4.8	-0.7	0.4
1226	ok	0.23	0.3	1.04e-03	4.7	4.7	4.7	4.7	3.7	4.5	-3.1	4.6	0.9	0.2
1227	ok	0.23	0.2	2.58e-03	4.7	4.7	4.7	4.7	1.5	-0.8	1.1	-4.4	-0.7	-0.4
1228	ok	0.23	0.3	1.24e-03	4.7	4.7	4.7	4.7	2.3	4.8	-3.1	4.6	0.9	0.2
1229	ok	0.23	0.2	2.68e-03	4.7	4.7	4.7	4.7	1.0	-0.8	1.2	-4.3	-0.7	-0.4
1230	ok	0.23	0.3	1.31e-03	4.7	4.7	4.7	4.7	1.5	5.0	-3.2	4.6	0.9	0.2
1231	ok	0.23	0.2	2.77e-03	4.7	4.7	4.7	4.7	0.7	-0.8	1.2	-4.3	-0.7	-0.4
1232	ok	0.23	0.3	1.39e-03	4.7	4.7	4.7	4.7	1.5	4.9	-3.3	4.5	0.9	0.2
1233	ok	0.23	0.2	2.67e-03	4.7	4.7	4.7	4.7	0.5	-0.7	1.2	-4.2	-0.7	-0.3
1234	ok	0.23	0.2	1.49e-03	4.7	4.7	4.7	4.7	2.1	4.7	-3.3	4.4	0.9	0.2
1235	ok	0.23	0.3	2.60e-03	4.7	4.7	4.7	4.7	0.4	-0.9	1.2	-4.6	-0.7	-0.3
1236	ok	0.23	0.3	1.41e-03	4.7	4.7	4.7	4.7	1.4	4.7	-3.1	4.9	1.0	-3.05e-02
1237	ok	0.23	0.2	2.80e-03	4.7	4.7	4.7	4.7	-1.9	-1.2	-1.1	-4.5	-0.6	0.4
1238	ok	0.23	0.3	1.75e-03	4.7	4.7	4.7	4.7	1.8	4.6	-3.2	4.5	0.9	0.2
1239	ok	0.23	0.2	2.67e-03	4.7	4.7	4.7	4.7	-1.7	-1.2	1.4	-4.1	-0.6	-0.3
1240	ok	0.23	0.2	2.10e-03	4.7	4.7	4.7	4.7	0.2	4.9	-3.2	4.5	0.9	0.2
1241	ok	0.23	0.2	2.75e-03	4.7	4.7	4.7	4.7	-4.2	-1.3	1.4	-4.0	-0.6	-0.3
1242	ok	0.23	0.2	2.82e-03	4.7	4.7	4.7	4.7	0.7	4.8	-3.2	4.4	0.9	0.2
1243	ok	0.23	0.2	2.85e-03	4.7	4.7	4.7	4.7	-5.5	-0.3	-1.2	-3.9	-0.6	0.3
1244	ok	0.23	0.2	3.92e-03	4.7	4.7	4.7	4.7	-1.9	4.3	-2.9	4.2	0.8	0.2
1245	ok	0.23	0.3	3.51e-03	4.7	4.7	4.7	4.7	2.4	-3.3	2.2	-5.2	-0.7	-0.4
1246	ok	0.23	0.3	3.23e-03	4.7	4.7	4.7	4.7	6.1	3.7	-1.5	-3.9	-0.4	-4.54e-02
1247	ok	0.23	0.2	4.30e-03	4.7	4.7	4.7	4.7	-1.4	9.8	2.5	4.4	0.9	4.33e-02
1248	ok	0.23	0.2	2.63e-03	4.7	4.7	4.7	4.7	-2.2	3.3	2.9	3.3	0.6	-0.4
1249	ok	0.23	0.2	3.16e-03	4.7	4.7	4.7	4.7	-3.1	4.0	-0.2	3.5	0.8	-0.2
1250	ok	0.23	0.2	2.17e-03	4.7	4.7	4.7	4.7	-0.7	1.7	-0.7	-3.2	-0.7	-0.5

1251	ok	0.23	0.2	3.19e-03	4.7	4.7	4.7	4.7	-2.8	4.3	-0.8	3.7	0.8	-0.2
1252	ok	0.23	0.2	2.22e-03	4.7	4.7	4.7	4.7	0.1	1.0	-1.2	-3.3	-0.7	-0.5
1253	ok	0.23	0.2	3.38e-03	4.7	4.7	4.7	4.7	-2.2	4.4	-1.0	3.7	0.8	-0.2
1254	ok	0.23	0.2	2.30e-03	4.7	4.7	4.7	4.7	1.0	1.2	-1.4	-3.3	-0.7	-0.5
1255	ok	0.23	0.2	3.07e-03	4.7	4.7	4.7	4.7	-1.7	4.3	-0.6	3.7	0.8	-0.2
1256	ok	0.23	0.2	2.16e-03	4.7	4.7	4.7	4.7	1.4	1.4	-1.3	-3.4	-0.7	-0.5
1257	ok	0.23	0.2	3.18e-03	4.7	4.7	4.7	4.7	-0.8	-1.0	0.3	3.7	0.7	-0.2
1258	ok	0.23	0.2	2.06e-03	4.7	4.7	4.7	4.7	1.5	-0.5	-0.1	-3.4	-0.7	-0.5
1259	ok	0.23	0.2	2.86e-03	4.7	4.7	4.7	4.7	-1.6	4.2	-0.4	3.7	0.8	-0.2
1260	ok	0.23	0.2	2.12e-03	4.7	4.7	4.7	4.7	1.9	1.2	-0.9	-3.5	-0.7	-0.5
1261	ok	0.23	0.2	3.11e-03	4.7	4.7	4.7	4.7	-1.4	4.3	-0.9	3.8	0.8	-0.2
1262	ok	0.23	0.2	2.08e-03	4.7	4.7	4.7	4.7	2.3	1.1	-1.1	-3.5	-0.7	-0.5
1263	ok	0.23	0.2	3.06e-03	4.7	4.7	4.7	4.7	-1.2	4.3	-1.3	3.8	0.9	-0.2
1264	ok	0.23	0.2	2.07e-03	4.7	4.7	4.7	4.7	2.7	1.2	-1.4	-3.6	-0.7	-0.5
1265	ok	0.23	0.2	3.03e-03	4.7	4.7	4.7	4.7	-0.7	3.7	-1.4	3.8	0.9	-0.2
1266	ok	0.23	0.2	2.05e-03	4.7	4.7	4.7	4.7	3.2	1.6	-1.6	-3.6	-0.7	-0.5
1267	ok	0.23	0.2	2.77e-03	4.7	4.7	4.7	4.7	-0.2	3.7	-0.8	3.7	0.8	-0.2
1268	ok	0.23	0.2	1.91e-03	4.7	4.7	4.7	4.7	3.4	1.7	-1.4	-3.6	-0.7	-0.5
1269	ok	0.23	0.2	2.93e-03	4.7	4.7	4.7	4.7	0.9	-0.5	2.14e-02	3.7	0.7	-0.2
1270	ok	0.23	0.2	1.85e-03	4.7	4.7	4.7	4.7	3.3	-0.2	-0.1	-3.6	-0.8	-0.6
1271	ok	0.23	0.2	2.59e-03	4.7	4.7	4.7	4.7	0.3	4.1	-0.4	3.7	0.8	-0.2
1272	ok	0.23	0.2	1.99e-03	4.7	4.7	4.7	4.7	2.9	-0.3	-0.9	-3.6	-0.7	0.5
1273	ok	0.23	0.2	2.92e-03	4.7	4.7	4.7	4.7	0.4	4.1	-0.8	3.7	0.8	-0.2
1274	ok	0.23	0.2	2.01e-03	4.7	4.7	4.7	4.7	3.0	2.3	0.3	-3.7	-0.7	-0.5
1275	ok	0.23	0.2	2.95e-03	4.7	4.7	4.7	4.7	0.7	4.1	-1.3	3.7	0.8	-0.2
1276	ok	0.23	0.2	1.99e-03	4.7	4.7	4.7	4.7	3.2	2.2	7.87e-02	-3.7	-0.7	-0.5
1277	ok	0.23	0.2	3.03e-03	4.7	4.7	4.7	4.7	1.0	3.9	-1.5	3.6	0.8	-0.2
1278	ok	0.23	0.2	2.04e-03	4.7	4.7	4.7	4.7	3.5	2.3	-1.40e-02	-3.6	-0.7	-0.5
1279	ok	0.23	0.2	2.71e-03	4.7	4.7	4.7	4.7	0.3	3.6	0.5	3.6	0.8	0.2
1280	ok	0.23	0.2	1.88e-03	4.7	4.7	4.7	4.7	3.0	-0.3	8.17e-02	-3.6	-0.8	0.6
1281	ok	0.23	0.2	2.92e-03	4.7	4.7	4.7	4.7	2.3	-3.68e-02	0.1	3.4	0.7	-0.2
1282	ok	0.23	0.2	1.92e-03	4.7	4.7	4.7	4.7	3.6	1.7	1.4	-3.6	-0.7	0.5
1283	ok	0.23	0.2	2.71e-03	4.7	4.7	4.7	4.7	-0.2	3.7	0.8	3.7	0.8	0.2
1284	ok	0.23	0.2	2.07e-03	4.7	4.7	4.7	4.7	2.7	-0.1	0.6	-3.6	-0.7	0.5
1285	ok	0.23	0.2	3.06e-03	4.7	4.7	4.7	4.7	-0.8	3.7	1.4	3.8	0.8	0.2
1286	ok	0.23	0.2	2.09e-03	4.7	4.7	4.7	4.7	2.7	1.1	1.4	-3.5	-0.7	0.5
1287	ok	0.23	0.2	3.08e-03	4.7	4.7	4.7	4.7	-1.2	4.3	1.3	3.7	0.8	0.2
1288	ok	0.23	0.2	2.10e-03	4.7	4.7	4.7	4.7	2.3	1.1	1.1	-3.5	-0.7	0.5
1289	ok	0.23	0.2	3.14e-03	4.7	4.7	4.7	4.7	-1.4	4.3	0.9	3.7	0.8	0.2
1290	ok	0.23	0.2	2.15e-03	4.7	4.7	4.7	4.7	1.8	1.2	0.9	-3.5	-0.7	0.5
1291	ok	0.23	0.2	2.89e-03	4.7	4.7	4.7	4.7	-1.6	4.2	0.4	3.7	0.8	0.2
1292	ok	0.23	0.2	2.07e-03	4.7	4.7	4.7	4.7	1.4	-0.5	7.44e-02	-3.4	-0.7	0.5
1293	ok	0.23	0.2	3.17e-03	4.7	4.7	4.7	4.7	-1.7	3.8	0.7	3.6	0.8	6.90e-02
1294	ok	0.23	0.2	2.21e-03	4.7	4.7	4.7	4.7	1.4	1.4	1.3	-3.3	-0.7	0.5
1295	ok	0.23	0.2	3.09e-03	4.7	4.7	4.7	4.7	-1.8	4.3	0.6	3.6	0.8	0.2
1296	ok	0.23	0.2	2.32e-03	4.7	4.7	4.7	4.7	1.1	-0.5	0.5	-3.3	-0.7	0.5
1297	ok	0.23	0.2	3.40e-03	4.7	4.7	4.7	4.7	-2.2	4.3	1.0	3.7	0.8	0.2
1298	ok	0.23	0.2	2.24e-03	4.7	4.7	4.7	4.7	0.1	1.0	1.2	-3.3	-0.7	0.5
1299	ok	0.23	0.2	3.26e-03	4.7	4.7	4.7	4.7	-2.8	4.3	0.8	3.6	0.8	0.2
1300	ok	0.23	0.2	2.19e-03	4.7	4.7	4.7	4.7	-0.7	1.7	0.7	-3.2	-0.7	0.4
1301	ok	0.23	0.2	3.18e-03	4.7	4.7	4.7	4.7	-3.1	4.0	0.2	3.5	0.7	0.2
1302	ok	0.23	0.2	2.64e-03	4.7	4.7	4.7	4.7	4.2	-1.7	-0.8	-3.9	-0.7	-0.4
1303	ok	0.23	0.2	4.28e-03	4.7	4.7	4.7	4.7	-1.4	9.8	-2.6	4.3	0.9	-4.23e-02
1304	ok	0.23	0.2	6.45e-03	4.7	4.7	4.7	4.7	-0.9	7.8	2.4	3.4	0.7	-2.68e-02
1305	ok	0.23	0.2	3.21e-03	4.7	4.7	4.7	4.7	-1.5	4.2	1.7	-2.2	-0.6	-0.4
1306	ok	0.23	0.1	4.79e-03	4.7	4.7	4.7	4.7	-0.3	5.6	1.7	2.7	0.6	-0.2
1307	ok	0.23	0.1	2.56e-03	4.7	4.7	4.7	4.7	-1.4	3.1	0.6	-2.4	-0.5	-0.5
1308	ok	0.23	0.2	5.00e-03	4.7	4.7	4.7	4.7	-0.1	5.0	1.2	2.8	0.6	-0.2
1309	ok	0.23	0.1	2.77e-03	4.7	4.7	4.7	4.7	-1.2	3.1	9.27e-02	-2.5	-0.5	-0.5
1310	ok	0.23	0.2	5.05e-03	4.7	4.7	4.7	4.7	0.2	4.8	1.0	2.8	0.6	-0.2
1311	ok	0.23	0.2	2.79e-03	4.7	4.7	4.7	4.7	-0.7	3.1	-8.56e-02	-2.5	-0.6	-0.5
1312	ok	0.23	0.2	4.76e-03	4.7	4.7	4.7	4.7	0.4	4.9	1.4	2.8	0.6	-0.2
1313	ok	0.23	0.2	2.68e-03	4.7	4.7	4.7	4.7	-0.5	2.2	0.1	-2.6	-0.5	-0.5
1314	ok	0.23	0.2	4.74e-03	4.7	4.7	4.7	4.7	0.6	3.0	1.4	2.8	0.6	-0.2
1315	ok	0.23	0.2	2.54e-03	4.7	4.7	4.7	4.7	-0.9	-0.6	1.5	-2.6	-0.6	-0.5
1316	ok	0.23	0.2	4.60e-03	4.7	4.7	4.7	4.7	0.8	2.8	1.5	2.8	0.6	-0.2
1317	ok	0.23	0.2	2.61e-03	4.7	4.7	4.7	4.7	1.8	-0.7	-2.0	-2.7	-0.6	0.4
1318	ok	0.23	0.2	4.85e-03	4.7	4.7	4.7	4.7	1.1	2.6	1.2	2.8	0.6	-0.2
1319	ok	0.23	0.2	2.62e-03	4.7	4.7	4.7	4.7	0.2	2.0	0.2	-2.7	-0.6	-0.5
1320	ok	0.23	0.2	4.88e-03	4.7	4.7	4.7	4.7	1.4	2.5	0.8	2.8	0.6	-0.2
1321	ok	0.23	0.2	2.62e-03	4.7	4.7	4.7	4.7	0.5	2.0	-0.1	-2.7	-0.6	-0.5
1322	ok	0.23	0.2	4.78e-03	4.7	4.7	4.7	4.7	1.7	2.6	0.7	2.9	0.6	-0.2
1323	ok	0.23	0.2	2.55e-03	4.7	4.7	4.7	4.7	0.9	2.2	-0.2	-2.7	-0.6	-0.5
1324	ok	0.23	0.2	4.52e-03	4.7	4.7	4.7	4.7	2.0	4.1	1.1	2.8	0.6	-0.2
1325	ok	0.23	0.2	2.40e-03	4.7	4.7	4.7	4.7	2.1	-2.76e-02	-1.8	-2.7	-0.6	0.5
1326	ok	0.23	0.2	4.47e-03	4.7	4.7	4.7	4.7	2.2	3.5	1.2	2.8	0.6	-0.2
1327	ok	0.23	0.2	2.34e-03	4.7	4.7	4.7	4.7	0.7	-0.3	1.4	-2.7	-0.6	-0.5
1328	ok	0.23	0.2	4.31e-03	4.7	4.7	4.7	4.7	2.5	3.4	1.4	2.8	0.6	-0.2
1329	ok	0.23	0.2	2.49e-03	4.7	4.7	4.7	4.7	1.6	-1.0	-1.2	-2.8	-0.6	0.5

1330	ok	0.23	0.2	4.64e-03	4.7	4.7	4.7	4.7	2.8	3.1	1.2	2.8	0.5	-0.2
1331	ok	0.23	0.2	2.56e-03	4.7	4.7	4.7	4.7	2.0	2.2	0.4	-2.8	-0.6	-0.5
1332	ok	0.23	0.2	4.76e-03	4.7	4.7	4.7	4.7	3.2	2.9	0.8	2.7	0.5	-0.2
1333	ok	0.23	0.2	2.56e-03	4.7	4.7	4.7	4.7	2.3	2.2	0.1	-2.8	-0.6	-0.5
1334	ok	0.23	0.2	4.75e-03	4.7	4.7	4.7	4.7	3.5	2.9	0.8	2.7	0.5	-0.2
1335	ok	0.23	0.2	2.53e-03	4.7	4.7	4.7	4.7	2.6	2.3	2.29e-02	-2.8	-0.6	-0.5
1336	ok	0.23	0.2	4.36e-03	4.7	4.7	4.7	4.7	3.7	3.3	1.4	2.7	0.5	-0.2
1337	ok	0.23	0.2	2.35e-03	4.7	4.7	4.7	4.7	0.5	-0.3	-1.4	-2.7	-0.6	0.5
1338	ok	0.23	0.2	4.46e-03	4.7	4.7	4.7	4.7	3.6	4.0	1.5	2.6	0.5	-0.2
1339	ok	0.23	0.2	2.40e-03	4.7	4.7	4.7	4.7	2.0	-4.17e-02	1.7	-2.7	-0.6	-0.5
1340	ok	0.23	0.2	4.48e-03	4.7	4.7	4.7	4.7	3.7	3.8	1.8	2.6	0.5	-0.2
1341	ok	0.23	0.2	2.57e-03	4.7	4.7	4.7	4.7	2.70e-02	-0.6	-0.8	-2.7	-0.6	0.5
1342	ok	0.23	0.2	4.82e-03	4.7	4.7	4.7	4.7	3.8	3.5	1.7	2.5	0.5	-0.2
1343	ok	0.23	0.2	2.65e-03	4.7	4.7	4.7	4.7	0.5	2.0	0.1	-2.7	-0.6	0.5
1344	ok	0.23	0.2	4.92e-03	4.7	4.7	4.7	4.7	3.7	3.4	1.5	2.5	0.5	-0.2
1345	ok	0.23	0.2	2.65e-03	4.7	4.7	4.7	4.7	2.7	2.5	0.7	-2.7	-0.6	-0.5
1346	ok	0.23	0.2	4.90e-03	4.7	4.7	4.7	4.7	3.6	3.5	1.6	2.5	0.5	-0.2
1347	ok	0.23	0.2	2.64e-03	4.7	4.7	4.7	4.7	2.6	2.6	0.7	-2.7	-0.6	-0.5
1348	ok	0.23	0.2	4.63e-03	4.7	4.7	4.7	4.7	3.3	3.9	2.2	2.4	0.5	-0.2
1349	ok	0.23	0.2	2.55e-03	4.7	4.7	4.7	4.7	-0.9	-0.6	-1.5	-2.6	-0.6	0.5
1350	ok	0.23	0.2	4.73e-03	4.7	4.7	4.7	4.7	2.8	4.4	2.5	2.3	0.4	-0.2
1351	ok	0.23	0.2	2.69e-03	4.7	4.7	4.7	4.7	-0.5	2.1	-0.1	-2.6	-0.5	0.5
1352	ok	0.23	0.2	4.67e-03	4.7	4.7	4.7	4.7	-0.7	-0.8	0.3	2.8	0.5	0.2
1353	ok	0.23	0.2	2.82e-03	4.7	4.7	4.7	4.7	-1.1	0.4	-1.0	-2.5	-0.5	0.5
1354	ok	0.23	0.2	5.08e-03	4.7	4.7	4.7	4.7	-0.8	-0.8	0.7	2.8	0.5	0.2
1355	ok	0.23	0.1	2.79e-03	4.7	4.7	4.7	4.7	-1.0	3.1	-0.1	-2.5	-0.5	0.5
1356	ok	0.23	0.1	5.02e-03	4.7	4.7	4.7	4.7	-0.9	-0.6	0.4	2.7	0.5	0.2
1357	ok	0.23	0.1	2.58e-03	4.7	4.7	4.7	4.7	-1.3	3.1	-0.6	-2.4	-0.5	0.5
1358	ok	0.23	0.1	4.82e-03	4.7	4.7	4.7	4.7	-0.3	5.5	-1.6	2.6	0.5	0.2
1359	ok	0.23	0.2	3.21e-03	4.7	4.7	4.7	4.7	1.0	-3.0	1.71e-02	-2.9	-0.7	-0.3
1360	ok	0.23	0.2	6.42e-03	4.7	4.7	4.7	4.7	-0.9	7.9	-2.5	3.3	0.7	2.80e-02
1361	ok	0.23	0.1	6.48e-03	4.7	4.7	4.7	4.7	-1.4	6.6	2.9	2.4	0.4	1.45e-02
1362	ok	0.23	0.1	3.14e-03	4.7	4.7	4.7	4.7	-1.0	5.6	3.3	-1.6	-0.4	-0.4
1363	ok	0.23	0.1	4.80e-03	4.7	4.7	4.7	4.7	0.5	5.5	2.1	1.9	0.4	-0.2
1364	ok	0.23	0.1	2.69e-03	4.7	4.7	4.7	4.7	-1.0	-0.1	2.9	-1.7	-0.4	-0.4
1365	ok	0.23	0.1	4.99e-03	4.7	4.7	4.7	4.7	0.4	4.9	1.8	2.0	0.4	-0.2
1366	ok	0.23	0.1	2.93e-03	4.7	4.7	4.7	4.7	-1.1	-0.3	2.4	-1.7	-0.4	-0.5
1367	ok	0.23	0.1	5.01e-03	4.7	4.7	4.7	4.7	0.4	4.7	1.6	2.0	0.4	-0.2
1368	ok	0.23	0.1	2.99e-03	4.7	4.7	4.7	4.7	-1.1	-0.3	2.1	-1.8	-0.4	-0.5
1369	ok	0.23	0.1	4.67e-03	4.7	4.7	4.7	4.7	0.3	1.9	2.4	2.0	0.4	-0.2
1370	ok	0.23	0.1	2.74e-03	4.7	4.7	4.7	4.7	-1.0	-1.5	2.3	-1.8	-0.4	-0.5
1371	ok	0.23	0.1	4.78e-03	4.7	4.7	4.7	4.7	0.4	2.2	2.3	2.0	0.4	-0.2
1372	ok	0.23	0.1	2.67e-03	4.7	4.7	4.7	4.7	-1.0	-1.4	2.5	-1.8	-0.4	-0.5
1373	ok	0.23	0.1	4.61e-03	4.7	4.7	4.7	4.7	0.6	2.1	2.5	2.0	0.4	-0.2
1374	ok	0.23	0.1	2.75e-03	4.7	4.7	4.7	4.7	2.1	-1.1	-2.1	-1.9	-0.4	0.4
1375	ok	0.23	0.1	4.82e-03	4.7	4.7	4.7	4.7	0.9	1.8	2.4	2.0	0.4	-0.2
1376	ok	0.23	0.1	2.77e-03	4.7	4.7	4.7	4.7	-0.6	-1.7	2.3	-1.9	-0.4	-0.5
1377	ok	0.23	0.1	4.88e-03	4.7	4.7	4.7	4.7	1.2	1.7	2.0	2.0	0.4	-0.2
1378	ok	0.23	0.1	2.82e-03	4.7	4.7	4.7	4.7	-0.4	-1.7	1.8	-1.9	-0.4	-0.5
1379	ok	0.23	0.1	4.77e-03	4.7	4.7	4.7	4.7	1.5	1.8	1.8	2.0	0.4	-0.2
1380	ok	0.23	0.1	2.78e-03	4.7	4.7	4.7	4.7	-0.2	-1.5	1.5	-1.9	-0.4	-0.5
1381	ok	0.23	0.1	4.52e-03	4.7	4.7	4.7	4.7	1.7	2.2	2.1	2.0	0.4	-0.2
1382	ok	0.23	0.1	2.61e-03	4.7	4.7	4.7	4.7	0.1	-1.2	1.8	-1.9	-0.4	-0.5
1383	ok	0.23	0.1	4.53e-03	4.7	4.7	4.7	4.7	1.9	2.5	2.1	2.0	0.4	-0.2
1384	ok	0.23	0.1	2.51e-03	4.7	4.7	4.7	4.7	0.4	-1.1	2.2	-2.0	-0.4	-0.5
1385	ok	0.23	0.1	4.35e-03	4.7	4.7	4.7	4.7	2.1	2.4	2.4	2.0	0.4	-0.2
1386	ok	0.23	0.1	2.70e-03	4.7	4.7	4.7	4.7	1.3	-1.3	-1.2	-2.0	-0.5	0.5
1387	ok	0.23	0.1	4.60e-03	4.7	4.7	4.7	4.7	2.4	2.1	2.3	1.9	0.4	-0.2
1388	ok	0.23	0.1	2.76e-03	4.7	4.7	4.7	4.7	1.1	-1.7	-1.4	-2.0	-0.5	0.5
1389	ok	0.23	0.1	4.77e-03	4.7	4.7	4.7	4.7	2.8	1.8	2.1	1.9	0.4	-0.2
1390	ok	0.23	0.1	2.73e-03	4.7	4.7	4.7	4.7	0.8	-1.6	-2.2	-2.0	-0.5	0.5
1391	ok	0.23	0.1	4.67e-03	4.7	4.7	4.7	4.7	3.1	1.9	2.2	1.9	0.4	-0.2
1392	ok	0.23	0.1	2.72e-03	4.7	4.7	4.7	4.7	1.4	-1.5	1.3	-2.0	-0.5	-0.5
1393	ok	0.23	0.1	4.32e-03	4.7	4.7	4.7	4.7	3.2	2.5	2.6	1.9	0.4	-0.2
1394	ok	0.23	0.1	2.53e-03	4.7	4.7	4.7	4.7	1.6	-1.1	1.8	-1.9	-0.5	-0.5
1395	ok	0.23	0.1	4.52e-03	4.7	4.7	4.7	4.7	3.3	2.9	2.5	1.8	0.3	-0.2
1396	ok	0.23	0.1	2.62e-03	4.7	4.7	4.7	4.7	1.72e-02	-1.3	-1.9	-1.9	-0.4	0.5
1397	ok	0.23	0.1	4.53e-03	4.7	4.7	4.7	4.7	3.5	2.7	3.0	1.8	0.3	-0.2
1398	ok	0.23	0.1	2.82e-03	4.7	4.7	4.7	4.7	-0.2	-1.6	-1.5	-1.9	-0.4	0.5
1399	ok	0.23	0.1	4.83e-03	4.7	4.7	4.7	4.7	3.7	2.4	3.1	1.8	0.3	-0.2
1400	ok	0.23	0.1	2.85e-03	4.7	4.7	4.7	4.7	-0.5	-1.8	-1.8	-1.9	-0.4	0.5
1401	ok	0.23	0.1	4.94e-03	4.7	4.7	4.7	4.7	3.8	2.2	3.0	1.8	0.3	-0.2
1402	ok	0.23	0.1	2.81e-03	4.7	4.7	4.7	4.7	-0.7	-1.8	-2.3	-1.9	-0.4	0.5
1403	ok	0.23	0.1	4.88e-03	4.7	4.7	4.7	4.7	3.7	2.4	3.1	1.7	0.3	-0.2
1404	ok	0.23	0.1	2.79e-03	4.7	4.7	4.7	4.7	2.0	-1.1	2.1	-1.9	-0.4	-0.5
1405	ok	0.23	0.1	4.66e-03	4.7	4.7	4.7	4.7	3.6	2.7	3.5	1.7	0.3	-0.2
1406	ok	0.23	0.1	2.68e-03	4.7	4.7	4.7	4.7	-1.0	-1.4	-2.5	-1.8	-0.4	0.5
1407	ok	0.23	0.1	4.78e-03	4.7	4.7	4.7	4.7	3.3	3.2	3.7	1.6	0.3	-0.2
1408	ok	0.23	0.1	2.74e-03	4.7	4.7	4.7	4.7	-1.1	-1.5	-2.3	-1.8	-0.4	0.5

1409	ok	0.23	0.1	4.72e-03	4.7	4.7	4.7	4.7	3.0	3.0	4.2	1.6	0.3	-0.2
1410	ok	0.23	0.1	3.02e-03	4.7	4.7	4.7	4.7	-1.2	-0.3	-2.1	-1.8	-0.4	0.5
1411	ok	0.23	0.1	5.06e-03	4.7	4.7	4.7	4.7	2.7	2.9	3.9	1.5	0.3	-0.2
1412	ok	0.23	0.1	2.96e-03	4.7	4.7	4.7	4.7	-1.2	-0.3	-2.4	-1.7	-0.4	0.5
1413	ok	0.23	0.1	5.04e-03	4.7	4.7	4.7	4.7	2.3	0.8	3.0	1.4	0.3	-0.2
1414	ok	0.23	0.1	2.72e-03	4.7	4.7	4.7	4.7	-1.0	-0.2	-3.0	-1.7	-0.4	0.4
1415	ok	0.23	0.1	4.84e-03	4.7	4.7	4.7	4.7	0.5	5.4	-2.1	1.9	0.4	0.2
1416	ok	0.23	0.1	3.15e-03	4.7	4.7	4.7	4.7	1.0	-2.7	0.4	-2.0	-0.4	-0.3
1417	ok	0.23	0.1	6.45e-03	4.7	4.7	4.7	4.7	-1.4	6.7	-2.9	2.4	0.4	-1.37e-02
1418	ok	0.23	7.22e-02	4.09e-03	4.7	4.7	4.7	4.7	-1.4	6.4	2.7	1.4	0.5	-5.37e-02
1419	ok	0.23	7.21e-02	3.04e-03	4.7	4.7	4.7	4.7	1.0	4.1	3.1	-0.8	-0.3	-0.4
1420	ok	0.23	5.69e-02	3.06e-03	4.7	4.7	4.7	4.7	0.3	2.9	3.4	1.0	0.2	-0.2
1421	ok	0.23	7.35e-02	2.73e-03	4.7	4.7	4.7	4.7	-8.44e-02	0.2	3.5	-0.9	-0.3	-0.4
1422	ok	0.23	5.82e-02	3.28e-03	4.7	4.7	4.7	4.7	-0.3	2.6	2.9	1.0	0.1	-0.2
1423	ok	0.23	8.03e-02	2.93e-03	4.7	4.7	4.7	4.7	0.4	2.6	3.4	-0.9	-0.4	-0.4
1424	ok	0.23	5.89e-02	3.26e-03	4.7	4.7	4.7	4.7	-0.2	2.7	2.6	1.0	0.1	-0.2
1425	ok	0.23	8.40e-02	2.87e-03	4.7	4.7	4.7	4.7	0.5	2.5	3.1	-0.9	-0.4	-0.4
1426	ok	0.23	5.98e-02	3.28e-03	4.7	4.7	4.7	4.7	-9.45e-02	1.9	2.8	1.0	0.1	-0.2
1427	ok	0.23	8.48e-02	2.82e-03	4.7	4.7	4.7	4.7	0.6	2.5	3.4	-1.0	-0.4	-0.4
1428	ok	0.23	5.87e-02	3.24e-03	4.7	4.7	4.7	4.7	-6.36e-02	2.1	2.7	1.0	0.1	-0.2
1429	ok	0.23	8.64e-02	2.69e-03	4.7	4.7	4.7	4.7	-0.3	-0.7	2.9	-1.0	-0.4	-0.4
1430	ok	0.23	5.99e-02	3.17e-03	4.7	4.7	4.7	4.7	0.1	2.0	3.0	1.0	0.1	-0.2
1431	ok	0.23	8.53e-02	2.73e-03	4.7	4.7	4.7	4.7	0.8	1.7	3.5	-1.0	-0.4	-0.4
1432	ok	0.23	6.06e-02	3.21e-03	4.7	4.7	4.7	4.7	0.4	1.8	2.9	1.0	0.1	-0.2
1433	ok	0.23	8.59e-02	2.71e-03	4.7	4.7	4.7	4.7	1.1	1.6	3.3	-1.0	-0.4	-0.4
1434	ok	0.23	6.16e-02	3.23e-03	4.7	4.7	4.7	4.7	0.6	1.8	2.6	1.0	0.1	-0.2
1435	ok	0.23	8.65e-02	2.83e-03	4.7	4.7	4.7	4.7	1.3	1.6	2.9	-1.0	-0.4	-0.4
1436	ok	0.23	6.22e-02	3.30e-03	4.7	4.7	4.7	4.7	0.8	1.9	2.3	1.0	0.1	-0.2
1437	ok	0.23	8.63e-02	2.82e-03	4.7	4.7	4.7	4.7	1.5	2.2	2.8	-1.0	-0.4	-0.4
1438	ok	0.23	6.24e-02	3.21e-03	4.7	4.7	4.7	4.7	1.0	2.1	2.5	1.0	0.1	-0.2
1439	ok	0.23	8.51e-02	2.70e-03	4.7	4.7	4.7	4.7	1.7	2.2	3.1	-1.0	-0.4	-0.4
1440	ok	0.23	6.11e-02	3.10e-03	4.7	4.7	4.7	4.7	1.2	2.2	2.5	1.0	0.1	-0.2
1441	ok	0.23	8.57e-02	2.59e-03	4.7	4.7	4.7	4.7	0.8	-0.5	2.6	-1.0	-0.4	-0.4
1442	ok	0.23	6.19e-02	3.09e-03	4.7	4.7	4.7	4.7	1.4	2.2	3.0	1.0	0.1	-0.2
1443	ok	0.23	8.36e-02	2.73e-03	4.7	4.7	4.7	4.7	1.9	-0.5	-2.2	-1.0	-0.4	0.4
1444	ok	0.23	6.24e-02	3.22e-03	4.7	4.7	4.7	4.7	1.8	1.9	3.0	1.0	0.1	-0.2
1445	ok	0.23	8.36e-02	2.75e-03	4.7	4.7	4.7	4.7	1.7	-0.7	-2.3	-1.1	-0.4	0.4
1446	ok	0.23	6.34e-02	3.19e-03	4.7	4.7	4.7	4.7	2.2	1.7	2.9	1.0	0.1	-0.2
1447	ok	0.23	8.41e-02	2.71e-03	4.7	4.7	4.7	4.7	2.8	1.7	3.1	-1.1	-0.4	-0.4
1448	ok	0.23	6.34e-02	3.15e-03	4.7	4.7	4.7	4.7	2.4	2.0	2.7	1.0	0.1	-0.2
1449	ok	0.23	8.47e-02	2.70e-03	4.7	4.7	4.7	4.7	3.1	1.9	3.1	-1.0	-0.4	-0.4
1450	ok	0.23	6.28e-02	3.04e-03	4.7	4.7	4.7	4.7	2.6	2.3	3.0	1.0	0.1	-0.2
1451	ok	0.23	8.66e-02	2.58e-03	4.7	4.7	4.7	4.7	3.3	2.1	3.5	-1.1	-0.4	-0.4
1452	ok	0.23	6.03e-02	3.08e-03	4.7	4.7	4.7	4.7	2.7	2.4	3.0	0.9	9.49e-02	-0.2
1453	ok	0.23	8.52e-02	2.70e-03	4.7	4.7	4.7	4.7	1.6	2.2	-3.1	-1.0	-0.4	0.4
1454	ok	0.23	6.18e-02	3.25e-03	4.7	4.7	4.7	4.7	3.0	2.2	3.6	0.9	9.64e-02	-0.2
1455	ok	0.23	8.65e-02	2.85e-03	4.7	4.7	4.7	4.7	0.2	-0.4	-2.1	-1.0	-0.4	0.4
1456	ok	0.23	6.13e-02	3.35e-03	4.7	4.7	4.7	4.7	3.2	2.1	3.8	0.9	8.91e-02	-0.2
1457	ok	0.23	8.67e-02	2.85e-03	4.7	4.7	4.7	4.7	0.1	-0.9	-2.3	-1.0	-0.4	0.4
1458	ok	0.23	6.06e-02	3.28e-03	4.7	4.7	4.7	4.7	3.4	2.0	3.7	0.9	8.49e-02	-0.2
1459	ok	0.23	8.62e-02	2.75e-03	4.7	4.7	4.7	4.7	-7.99e-02	-0.9	-2.8	-1.0	-0.4	0.4
1460	ok	0.23	5.96e-02	3.27e-03	4.7	4.7	4.7	4.7	3.5	2.1	3.7	0.8	8.03e-02	-0.2
1461	ok	0.23	8.56e-02	2.77e-03	4.7	4.7	4.7	4.7	-0.3	-0.8	-3.0	-1.0	-0.4	0.4
1462	ok	0.23	5.89e-02	3.22e-03	4.7	4.7	4.7	4.7	3.5	2.3	4.1	0.8	7.54e-02	-0.2
1463	ok	0.23	8.68e-02	2.70e-03	4.7	4.7	4.7	4.7	-0.4	-0.7	-2.9	-1.0	-0.4	0.4
1464	ok	0.23	5.72e-02	3.22e-03	4.7	4.7	4.7	4.7	3.4	2.6	4.2	0.7	5.37e-02	-0.2
1465	ok	0.23	8.51e-02	2.82e-03	4.7	4.7	4.7	4.7	0.6	2.5	-3.4	-1.0	-0.4	0.4
1466	ok	0.23	5.89e-02	3.32e-03	4.7	4.7	4.7	4.7	3.3	1.7	4.8	0.7	5.52e-02	-0.2
1467	ok	0.23	8.43e-02	2.89e-03	4.7	4.7	4.7	4.7	-0.5	7.20e-02	-2.6	-0.9	-0.4	0.4
1468	ok	0.23	5.80e-02	3.30e-03	4.7	4.7	4.7	4.7	3.1	1.5	4.7	0.7	4.46e-02	-0.2
1469	ok	0.23	8.15e-02	2.95e-03	4.7	4.7	4.7	4.7	-0.4	0.1	-3.0	-0.9	-0.4	0.4
1470	ok	0.23	5.73e-02	3.32e-03	4.7	4.7	4.7	4.7	2.6	1.3	3.8	0.6	2.09e-02	-0.2
1471	ok	0.23	7.38e-02	2.76e-03	4.7	4.7	4.7	4.7	-8.89e-02	0.1	-3.6	-0.9	-0.3	0.4
1472	ok	0.23	5.60e-02	3.10e-03	4.7	4.7	4.7	4.7	1.1	4.6	-2.4	-0.5	-0.2	0.1
1473	ok	0.23	7.26e-02	3.04e-03	4.7	4.7	4.7	4.7	2.1	-0.7	2.0	-1.1	-0.5	-0.2
1474	ok	0.23	7.10e-02	4.08e-03	4.7	4.7	4.7	4.7	-1.4	6.5	-2.7	1.3	0.5	5.39e-02
1475	ok	0.23	5.82e-02	1.31e-03	4.7	4.7	4.7	4.7	3.7	8.4	-0.7	0.3	0.2	-0.1
1476	ok	0.23	5.00e-02	3.03e-03	4.7	4.7	4.7	4.7	2.9	2.3	3.5	0.3	0.4	-0.4
1477	ok	0.23	3.74e-02	1.37e-03	4.7	4.7	4.7	4.7	1.4	4.2	4.3	-4.44e-02	0.2	-0.1
1478	ok	0.23	3.91e-02	2.20e-03	4.7	4.7	4.7	4.7	3.5	-1.0	-3.1	-0.1	0.3	0.4
1479	ok	0.23	3.44e-02	1.66e-03	4.7	4.7	4.7	4.7	-0.8	0.8	3.9	-0.3	6.93e-02	-0.1
1480	ok	0.23	4.40e-02	2.31e-03	4.7	4.7	4.7	4.7	3.6	-1.0	-4.1	-0.1	0.2	0.4
1481	ok	0.23	3.71e-02	1.54e-03	4.7	4.7	4.7	4.7	0.1	2.9	4.1	-0.3	8.36e-02	-0.1
1482	ok	0.23	4.59e-02	2.44e-03	4.7	4.7	4.7	4.7	3.5	-1.1	-4.3	-0.1	0.2	0.4
1483	ok	0.23	3.80e-02	1.57e-03	4.7	4.7	4.7	4.7	6.02e-02	2.9	4.0	-0.3	8.43e-02	-0.1
1484	ok	0.23	4.53e-02	2.48e-03	4.7	4.7	4.7	4.7	3.4	-1.3	-4.0	-0.2	0.3	0.4
1485	ok	0.23	3.97e-02	1.60e-03	4.7	4.7	4.7	4.7	0.3	3.0	4.2	-0.3	9.71e-02	-0.1
1486	ok	0.23	4.61e-02	2.30e-03	4.7	4.7	4.7	4.7	4.7	1.2	-4.5	-0.2	0.3	0.4
1487	ok	0.23	3.89e-02	1.62e-03	4.7	4.7	4.7	4.7	-1.1	0.7	3.7	-0.3	7.04e-02	-0.1

1488	ok	0.23	4.56e-02	2.27e-03	4.7	4.7	4.7	4.7	3.2	-1.3	-3.1	-0.2	0.2	0.4
1489	ok	0.23	3.90e-02	1.49e-03	4.7	4.7	4.7	4.7	0.4	3.0	4.0	-0.3	8.08e-02	-0.1
1490	ok	0.23	4.58e-02	2.21e-03	4.7	4.7	4.7	4.7	3.2	-1.3	-3.1	-0.2	0.2	0.4
1491	ok	0.23	3.93e-02	1.30e-03	4.7	4.7	4.7	4.7	0.6	3.0	3.8	-0.3	7.94e-02	-0.1
1492	ok	0.23	4.59e-02	2.33e-03	4.7	4.7	4.7	4.7	1.1	0.8	2.9	-0.2	0.2	-0.5
1493	ok	0.23	3.91e-02	1.19e-03	4.7	4.7	4.7	4.7	0.7	3.0	3.6	-0.3	7.90e-02	-0.1
1494	ok	0.23	4.52e-02	2.39e-03	4.7	4.7	4.7	4.7	1.2	0.8	2.8	-0.2	0.2	-0.5
1495	ok	0.23	3.78e-02	1.25e-03	4.7	4.7	4.7	4.7	0.8	3.0	3.6	-0.4	8.18e-02	-0.1
1496	ok	0.23	4.66e-02	2.39e-03	4.7	4.7	4.7	4.7	1.4	0.9	3.1	-0.2	0.3	-0.5
1497	ok	0.23	3.85e-02	1.21e-03	4.7	4.7	4.7	4.7	1.3	3.1	3.9	-0.3	9.66e-02	-0.1
1498	ok	0.23	4.69e-02	2.33e-03	4.7	4.7	4.7	4.7	3.0	1.1	-3.4	-0.2	0.3	0.4
1499	ok	0.23	3.72e-02	1.25e-03	4.7	4.7	4.7	4.7	1.3	1.0	-2.9	-0.3	7.80e-02	0.1
1500	ok	0.23	4.72e-02	2.35e-03	4.7	4.7	4.7	4.7	1.8	1.0	3.4	-0.2	0.2	-0.5
1501	ok	0.23	3.63e-02	1.21e-03	4.7	4.7	4.7	4.7	1.6	3.1	3.8	-0.3	8.21e-02	-0.2
1502	ok	0.23	4.63e-02	2.24e-03	4.7	4.7	4.7	4.7	2.2	0.9	3.2	-0.2	0.2	-0.5
1503	ok	0.23	3.62e-02	1.02e-03	4.7	4.7	4.7	4.7	2.0	3.1	3.6	-0.3	7.38e-02	-0.2
1504	ok	0.23	4.67e-02	2.20e-03	4.7	4.7	4.7	4.7	2.7	0.9	3.0	-0.2	0.2	-0.5
1505	ok	0.23	3.66e-02	1.09e-03	4.7	4.7	4.7	4.7	2.4	3.2	3.6	-0.3	7.74e-02	-0.2
1506	ok	0.23	4.70e-02	2.28e-03	4.7	4.7	4.7	4.7	2.8	1.0	3.1	-0.2	0.2	-0.5
1507	ok	0.23	3.73e-02	1.19e-03	4.7	4.7	4.7	4.7	2.6	3.2	3.8	-0.3	8.84e-02	-0.2
1508	ok	0.23	4.70e-02	2.31e-03	4.7	4.7	4.7	4.7	3.1	1.1	3.5	-0.2	0.2	-0.5
1509	ok	0.23	3.86e-02	1.21e-03	4.7	4.7	4.7	4.7	1.2	3.1	-3.8	-0.4	9.51e-02	0.1
1510	ok	0.23	4.69e-02	2.38e-03	4.7	4.7	4.7	4.7	1.9	-1.4	2.9	-0.2	0.2	-0.4
1511	ok	0.23	3.71e-02	1.28e-03	4.7	4.7	4.7	4.7	-0.5	0.7	-2.8	-0.4	6.17e-02	0.1
1512	ok	0.23	4.55e-02	2.40e-03	4.7	4.7	4.7	4.7	3.5	1.2	3.8	-0.2	0.2	-0.4
1513	ok	0.23	3.84e-02	1.21e-03	4.7	4.7	4.7	4.7	-0.6	0.7	-2.9	-0.3	5.87e-02	0.1
1514	ok	0.23	4.62e-02	2.33e-03	4.7	4.7	4.7	4.7	4.0	1.2	3.9	-0.2	0.2	-0.4
1515	ok	0.23	3.88e-02	1.32e-03	4.7	4.7	4.7	4.7	-0.6	0.7	-3.2	-0.3	5.93e-02	0.1
1516	ok	0.23	4.61e-02	2.21e-03	4.7	4.7	4.7	4.7	4.3	1.1	3.9	-0.2	0.2	-0.4
1517	ok	0.23	3.85e-02	1.51e-03	4.7	4.7	4.7	4.7	-0.9	0.7	-3.5	-0.3	6.10e-02	0.1
1518	ok	0.23	4.58e-02	2.29e-03	4.7	4.7	4.7	4.7	4.5	1.2	4.0	-0.2	0.2	-0.4
1519	ok	0.23	3.86e-02	1.65e-03	4.7	4.7	4.7	4.7	-1.2	0.7	-3.7	-0.3	6.55e-02	0.1
1520	ok	0.23	4.63e-02	2.32e-03	4.7	4.7	4.7	4.7	4.7	1.2	4.5	-0.2	0.3	-0.4
1521	ok	0.23	3.99e-02	1.60e-03	4.7	4.7	4.7	4.7	0.3	3.0	-4.3	-0.3	9.70e-02	0.1
1522	ok	0.23	4.56e-02	2.47e-03	4.7	4.7	4.7	4.7	3.4	-1.3	4.0	-0.2	0.3	-0.4
1523	ok	0.23	3.77e-02	1.58e-03	4.7	4.7	4.7	4.7	-1.2	0.6	-3.5	-0.3	6.48e-02	0.1
1524	ok	0.23	4.62e-02	2.44e-03	4.7	4.7	4.7	4.7	4.7	1.4	5.1	-0.1	0.2	-0.4
1525	ok	0.23	3.70e-02	1.54e-03	4.7	4.7	4.7	4.7	-0.9	0.7	-3.6	-0.3	6.45e-02	0.1
1526	ok	0.23	4.44e-02	2.30e-03	4.7	4.7	4.7	4.7	4.5	1.4	4.9	-0.1	0.3	-0.4
1527	ok	0.23	3.38e-02	1.66e-03	4.7	4.7	4.7	4.7	-0.8	0.8	-3.9	-0.3	6.50e-02	0.1
1528	ok	0.23	3.95e-02	2.21e-03	4.7	4.7	4.7	4.7	4.2	1.3	3.9	-0.1	0.3	-0.4
1529	ok	0.23	3.73e-02	1.40e-03	4.7	4.7	4.7	4.7	1.4	4.2	-4.3	-3.97e-02	0.2	0.1
1530	ok	0.23	4.92e-02	3.03e-03	4.7	4.7	4.7	4.7	2.9	2.3	-3.5	0.3	0.4	0.4
1531	ok	0.23	5.78e-02	1.31e-03	4.7	4.7	4.7	4.7	3.7	8.4	0.7	0.3	0.2	0.1

Nodo	**x/d**	**V N/M**	**ver. rid**	**Af pr-**	**Af pr+**	**Af sec-**	**Af sec+**	**N x**	**N y**	**N xy**	**M x**	**M y**	**M xy**
								-8.62	-3.29	-4.52	-5.17	-0.77	-0.62
	0.23	0.30	6.48e-03	4.67	4.67	4.67	4.67	6.10	9.83	5.06	5.70	1.02	0.56

Nodo	**Stato**	**Max tau**	**Ver V pr**	**Ver V sec**	**Af V pr**	**Af V sec**	**V pr**	**V sec**
		daN/cm2					kN/ m	kN/ m
1190	ok	2.21						
1191	ok	2.19						
1192	ok	1.91						
1193	ok	1.92						
1194	ok	1.98						
1195	ok	1.99						
1196	ok	2.00						
1197	ok	2.01						
1198	ok	2.03						
1199	ok	2.04						
1200	ok	2.15						
1201	ok	2.13						
1202	ok	2.04						
1203	ok	2.04						
1204	ok	2.05						
1205	ok	2.06						
1206	ok	2.07						
1207	ok	2.08						
1208	ok	2.08						
1209	ok	2.09						
1210	ok	2.09						
1211	ok	2.10						
1212	ok	2.22						
1213	ok	2.18						
1214	ok	2.07						
1215	ok	2.06						

1216	ok	2.07
1217	ok	2.07
1218	ok	2.07
1219	ok	2.07
1220	ok	2.07
1221	ok	2.06
1222	ok	2.06
1223	ok	2.16
1224	ok	2.19
1225	ok	2.12
1226	ok	2.07
1227	ok	2.06
1228	ok	2.06
1229	ok	2.06
1230	ok	2.05
1231	ok	2.04
1232	ok	2.03
1233	ok	2.01
1234	ok	2.01
1235	ok	2.10
1236	ok	2.13
1237	ok	2.01
1238	ok	2.00
1239	ok	1.98
1240	ok	1.97
1241	ok	1.96
1242	ok	1.95
1243	ok	1.89
1244	ok	1.89
1245	ok	2.16
1246	ok	2.18
1247	ok	1.39
1248	ok	1.40
1249	ok	1.31
1250	ok	1.35
1251	ok	1.39
1252	ok	1.42
1253	ok	1.41
1254	ok	1.44
1255	ok	1.39
1256	ok	1.43
1257	ok	1.29
1258	ok	1.34
1259	ok	1.41
1260	ok	1.45
1261	ok	1.45
1262	ok	1.47
1263	ok	1.46
1264	ok	1.49
1265	ok	1.46
1266	ok	1.49
1267	ok	1.43
1268	ok	1.47
1269	ok	1.32
1270	ok	1.43
1271	ok	1.43
1272	ok	1.47
1273	ok	1.44
1274	ok	1.48
1275	ok	1.45
1276	ok	1.48
1277	ok	1.44
1278	ok	1.47
1279	ok	1.43
1280	ok	1.44
1281	ok	1.31
1282	ok	1.46
1283	ok	1.42
1284	ok	1.49
1285	ok	1.45
1286	ok	1.48
1287	ok	1.45
1288	ok	1.46
1289	ok	1.43
1290	ok	1.44
1291	ok	1.40
1292	ok	1.33
1293	ok	1.28
1294	ok	1.42

1295	ok	1.38
1296	ok	1.43
1297	ok	1.39
1298	ok	1.41
1299	ok	1.38
1300	ok	1.34
1301	ok	1.30
1302	ok	1.38
1303	ok	1.38
1304	ok	1.20
1305	ok	1.19
1306	ok	1.07
1307	ok	1.09
1308	ok	1.11
1309	ok	1.13
1310	ok	1.12
1311	ok	1.14
1312	ok	1.09
1313	ok	1.11
1314	ok	1.11
1315	ok	1.14
1316	ok	1.14
1317	ok	1.17
1318	ok	1.14
1319	ok	1.17
1320	ok	1.15
1321	ok	1.18
1322	ok	1.15
1323	ok	1.18
1324	ok	1.11
1325	ok	1.14
1326	ok	1.13
1327	ok	1.16
1328	ok	1.15
1329	ok	1.18
1330	ok	1.14
1331	ok	1.17
1332	ok	1.14
1333	ok	1.17
1334	ok	1.14
1335	ok	1.17
1336	ok	1.15
1337	ok	1.15
1338	ok	1.12
1339	ok	1.13
1340	ok	1.10
1341	ok	1.17
1342	ok	1.14
1343	ok	1.17
1344	ok	1.14
1345	ok	1.16
1346	ok	1.13
1347	ok	1.15
1348	ok	1.13
1349	ok	1.12
1350	ok	1.10
1351	ok	1.10
1352	ok	1.08
1353	ok	1.13
1354	ok	1.10
1355	ok	1.12
1356	ok	1.10
1357	ok	1.08
1358	ok	1.06
1359	ok	1.18
1360	ok	1.19
1361	ok	0.87
1362	ok	0.84
1363	ok	0.74
1364	ok	0.76
1365	ok	0.76
1366	ok	0.78
1367	ok	0.77
1368	ok	0.79
1369	ok	0.76
1370	ok	0.79
1371	ok	0.75
1372	ok	0.77
1373	ok	0.78

1374	ok	0.80
1375	ok	0.79
1376	ok	0.81
1377	ok	0.79
1378	ok	0.81
1379	ok	0.79
1380	ok	0.81
1381	ok	0.78
1382	ok	0.80
1383	ok	0.75
1384	ok	0.78
1385	ok	0.78
1386	ok	0.80
1387	ok	0.78
1388	ok	0.80
1389	ok	0.78
1390	ok	0.80
1391	ok	0.78
1392	ok	0.80
1393	ok	0.78
1394	ok	0.78
1395	ok	0.75
1396	ok	0.79
1397	ok	0.77
1398	ok	0.81
1399	ok	0.78
1400	ok	0.80
1401	ok	0.78
1402	ok	0.80
1403	ok	0.78
1404	ok	0.79
1405	ok	0.77
1406	ok	0.76
1407	ok	0.74
1408	ok	0.78
1409	ok	0.76
1410	ok	0.78
1411	ok	0.76
1412	ok	0.77
1413	ok	0.75
1414	ok	0.75
1415	ok	0.73
1416	ok	0.83
1417	ok	0.86
1418	ok	0.56
1419	ok	0.62
1420	ok	0.45
1421	ok	0.60
1422	ok	0.47
1423	ok	0.60
1424	ok	0.48
1425	ok	0.60
1426	ok	0.47
1427	ok	0.60
1428	ok	0.47
1429	ok	0.59
1430	ok	0.49
1431	ok	0.60
1432	ok	0.49
1433	ok	0.60
1434	ok	0.49
1435	ok	0.60
1436	ok	0.49
1437	ok	0.61
1438	ok	0.48
1439	ok	0.60
1440	ok	0.48
1441	ok	0.58
1442	ok	0.49
1443	ok	0.59
1444	ok	0.49
1445	ok	0.59
1446	ok	0.49
1447	ok	0.59
1448	ok	0.49
1449	ok	0.59
1450	ok	0.49
1451	ok	0.58
1452	ok	0.47

1453	ok	0.60
1454	ok	0.48
1455	ok	0.60
1456	ok	0.49
1457	ok	0.60
1458	ok	0.49
1459	ok	0.59
1460	ok	0.49
1461	ok	0.59
1462	ok	0.48
1463	ok	0.58
1464	ok	0.46
1465	ok	0.59
1466	ok	0.47
1467	ok	0.59
1468	ok	0.47
1469	ok	0.59
1470	ok	0.47
1471	ok	0.60
1472	ok	0.44
1473	ok	0.61
1474	ok	0.56
1475	ok	0.37
1476	ok	0.40
1477	ok	0.44
1478	ok	0.35
1479	ok	0.47
1480	ok	0.33
1481	ok	0.46
1482	ok	0.33
1483	ok	0.45
1484	ok	0.33
1485	ok	0.46
1486	ok	0.32
1487	ok	0.44
1488	ok	0.32
1489	ok	0.44
1490	ok	0.32
1491	ok	0.43
1492	ok	0.32
1493	ok	0.43
1494	ok	0.32
1495	ok	0.43
1496	ok	0.33
1497	ok	0.44
1498	ok	0.32
1499	ok	0.43
1500	ok	0.32
1501	ok	0.42
1502	ok	0.32
1503	ok	0.41
1504	ok	0.32
1505	ok	0.42
1506	ok	0.32
1507	ok	0.43
1508	ok	0.32
1509	ok	0.45
1510	ok	0.33
1511	ok	0.44
1512	ok	0.32
1513	ok	0.43
1514	ok	0.32
1515	ok	0.43
1516	ok	0.32
1517	ok	0.43
1518	ok	0.32
1519	ok	0.44
1520	ok	0.31
1521	ok	0.46
1522	ok	0.32
1523	ok	0.45
1524	ok	0.33
1525	ok	0.46
1526	ok	0.33
1527	ok	0.46
1528	ok	0.35
1529	ok	0.44
1530	ok	0.39
1531	ok	0.37

Nodo	Max tau	Ver V pr	Ver V sec	Af V pr	Af V sec	V pr	V sec
	2.22						

Macro Guscio	Spessore	Id Materiale	Id Criterio	Progettazione
	cm			
33	15.00	1	1	Singolo elemento

Nodo	Stato	x/d	V N/M	ver. rid	Af pr-	Af pr+	Af sec-	Af sec+	N x	N y	N xy	M x	M y	M xy
									kN/ m	kN/ m	kN/ m	kN	kN	kN
1954	ok	0.23	0.3	1.39e-03	4.7	4.7	4.7	4.7	0.9	3.8	3.3	5.3	0.6	-7.23e-02
1955	ok	0.23	0.2	2.83e-03	4.7	4.7	4.7	4.7	-2.5	-1.1	-6.69e-02	4.0	0.9	-0.6
1956	ok	0.23	0.2	1.65e-03	4.7	4.7	4.7	4.7	3.0	3.4	3.4	4.3	0.8	-0.2
1957	ok	0.23	0.2	2.75e-03	4.7	4.7	4.7	4.7	-1.2	-0.9	1.2	-3.8	-0.6	-0.4
1958	ok	0.23	0.2	1.91e-03	4.7	4.7	4.7	4.7	3.3	3.6	3.7	4.4	0.8	-0.2
1959	ok	0.23	0.2	2.82e-03	4.7	4.7	4.7	4.7	-0.7	-1.0	1.5	-3.9	-0.6	-0.4
1960	ok	0.23	0.3	1.83e-03	4.7	4.7	4.7	4.7	4.1	3.5	3.7	4.4	0.9	-0.2
1961	ok	0.23	0.2	2.59e-03	4.7	4.7	4.7	4.7	0.2	-1.1	1.5	-3.9	-0.6	-0.4
1962	ok	0.23	0.3	1.80e-03	4.7	4.7	4.7	4.7	4.3	2.2	3.8	4.5	0.8	-0.2
1963	ok	0.23	0.2	2.61e-03	4.7	4.7	4.7	4.7	-5.8	-1.4	1.7	-4.4	-0.6	-0.4
1964	ok	0.23	0.3	1.61e-03	4.7	4.7	4.7	4.7	5.4	3.7	3.7	4.8	0.9	-4.34e-02
1965	ok	0.23	0.2	2.38e-03	4.7	4.7	4.7	4.7	-4.1	-1.4	1.7	-4.1	-0.6	-0.5
1966	ok	0.23	0.2	1.44e-03	4.7	4.7	4.7	4.7	2.50e-02	3.4	3.7	4.4	0.9	-0.2
1967	ok	0.23	0.2	2.12e-03	4.7	4.7	4.7	4.7	-4.6	-1.2	1.5	-4.1	-0.6	-0.4
1968	ok	0.23	0.2	1.34e-03	4.7	4.7	4.7	4.7	2.24e-02	3.5	3.7	4.5	0.9	-0.2
1969	ok	0.23	0.2	2.13e-03	4.7	4.7	4.7	4.7	-4.5	-1.3	1.5	-4.2	-0.6	-0.4
1970	ok	0.23	0.2	1.26e-03	4.7	4.7	4.7	4.7	-0.2	3.6	3.7	4.5	0.9	-0.2
1971	ok	0.23	0.2	1.90e-03	4.7	4.7	4.7	4.7	-3.9	-1.2	1.5	-4.2	-0.6	-0.4
1972	ok	0.23	0.2	1.17e-03	4.7	4.7	4.7	4.7	1.0	3.5	3.6	4.5	0.9	-0.2
1973	ok	0.23	0.2	1.54e-03	4.7	4.7	4.7	4.7	-2.9	-1.2	1.5	-4.2	-0.6	-0.4
1974	ok	0.23	0.3	1.09e-03	4.7	4.7	4.7	4.7	1.4	2.2	3.7	4.6	0.9	-0.2
1975	ok	0.23	0.3	1.44e-03	4.7	4.7	4.7	4.7	-2.3	-1.4	1.6	-4.7	-0.7	-0.4
1976	ok	0.23	0.3	8.40e-04	4.7	4.7	4.7	4.7	5.3	3.7	3.6	4.8	1.0	-5.91e-02
1977	ok	0.23	0.3	1.37e-03	4.7	4.7	4.7	4.7	-0.4	-1.4	1.6	-4.4	-0.7	-0.5
1978	ok	0.23	0.3	8.58e-04	4.7	4.7	4.7	4.7	5.0	3.3	3.6	4.4	0.9	-0.2
1979	ok	0.23	0.2	1.29e-03	4.7	4.7	4.7	4.7	-0.4	-1.2	1.4	-4.3	-0.7	-0.4
1980	ok	0.23	0.3	7.95e-04	4.7	4.7	4.7	4.7	4.4	3.6	3.8	4.4	0.9	-0.2
1981	ok	0.23	0.2	1.44e-03	4.7	4.7	4.7	4.7	9.07e-02	-1.3	1.5	-4.4	-0.7	-0.4
1982	ok	0.23	0.3	7.54e-04	4.7	4.7	4.7	4.7	4.4	3.7	3.8	4.4	0.9	-0.2
1983	ok	0.23	0.2	1.48e-03	4.7	4.7	4.7	4.7	0.2	-1.3	1.6	-4.4	-0.7	-0.4
1984	ok	0.23	0.3	8.80e-04	4.7	4.7	4.7	4.7	2.9	3.6	-3.9	4.4	0.9	0.2
1985	ok	0.23	0.2	1.53e-03	4.7	4.7	4.7	4.7	1.0	-1.3	1.5	-4.3	-0.7	-0.4
1986	ok	0.23	0.3	7.39e-04	4.7	4.7	4.7	4.7	2.4	3.3	-3.4	4.4	0.9	0.2
1987	ok	0.23	0.3	1.38e-03	4.7	4.7	4.7	4.7	-1.0	-1.2	1.7	-4.7	-0.7	-0.4
1988	ok	0.23	0.3	7.86e-04	4.7	4.7	4.7	4.7	5.9	3.9	3.7	4.6	0.9	-6.98e-02
1989	ok	0.23	0.3	1.40e-03	4.7	4.7	4.7	4.7	-1.8	-1.4	-1.6	-4.7	-0.7	0.4
1990	ok	0.23	0.3	1.04e-03	4.7	4.7	4.7	4.7	2.8	3.4	-3.4	4.5	0.9	0.2
1991	ok	0.23	0.2	1.41e-03	4.7	4.7	4.7	4.7	1.9	-1.2	1.4	-4.3	-0.7	-0.4
1992	ok	0.23	0.2	1.09e-03	4.7	4.7	4.7	4.7	1.4	3.6	-3.5	4.4	0.9	0.2
1993	ok	0.23	0.2	1.85e-03	4.7	4.7	4.7	4.7	1.8	-1.2	1.5	-4.2	-0.7	-0.4
1994	ok	0.23	0.2	1.17e-03	4.7	4.7	4.7	4.7	-3.08e-02	3.6	-3.7	4.4	0.9	0.2
1995	ok	0.23	0.2	2.11e-03	4.7	4.7	4.7	4.7	1.9	-1.2	1.5	-4.2	-0.7	-0.3
1996	ok	0.23	0.2	1.29e-03	4.7	4.7	4.7	4.7	-0.3	3.5	-3.7	4.4	0.9	0.2
1997	ok	0.23	0.2	2.12e-03	4.7	4.7	4.7	4.7	2.2	-1.1	1.5	-4.1	-0.6	-0.3
1998	ok	0.23	0.2	1.42e-03	4.7	4.7	4.7	4.7	9.94e-02	3.4	-3.7	4.4	0.9	0.2
1999	ok	0.23	0.2	2.36e-03	4.7	4.7	4.7	4.7	-4.4	-1.4	1.7	-4.5	-0.7	-0.3
2000	ok	0.23	0.3	1.58e-03	4.7	4.7	4.7	4.7	5.5	3.7	-3.7	4.7	0.9	4.82e-02
2001	ok	0.23	0.2	2.58e-03	4.7	4.7	4.7	4.7	-5.7	-1.4	-1.7	-4.4	-0.6	0.4
2002	ok	0.23	0.3	1.78e-03	4.7	4.7	4.7	4.7	5.4	3.3	-3.6	4.4	0.9	0.2
2003	ok	0.23	0.2	2.55e-03	4.7	4.7	4.7	4.7	-5.1	-1.2	1.8	-4.0	-0.6	-0.3
2004	ok	0.23	0.2	1.81e-03	4.7	4.7	4.7	4.7	4.1	3.5	-3.7	4.3	0.8	0.2
2005	ok	0.23	0.2	2.78e-03	4.7	4.7	4.7	4.7	-6.1	-1.2	1.8	-3.9	-0.6	-0.3
2006	ok	0.23	0.2	1.88e-03	4.7	4.7	4.7	4.7	3.3	3.6	-3.7	4.3	0.8	0.2
2007	ok	0.23	0.2	2.72e-03	4.7	4.7	4.7	4.7	-6.1	-1.1	1.6	-3.9	-0.6	-0.3
2008	ok	0.23	0.2	1.61e-03	4.7	4.7	4.7	4.7	2.9	3.4	-3.4	4.3	0.8	0.2
2009	ok	0.23	0.2	2.81e-03	4.7	4.7	4.7	4.7	-4.9	-1.6	1.7	-4.7	-0.7	-0.3
2010	ok	0.23	0.3	1.37e-03	4.7	4.7	4.7	4.7	1.3	4.8	-3.0	5.2	0.6	7.02e-02
2011	ok	0.23	0.2	7.92e-04	4.7	4.7	4.7	4.7	1.2	5.8	2.9	4.1	0.8	8.88e-03
2012	ok	0.23	0.2	4.76e-04	4.7	4.7	4.7	4.7	2.7	1.3	-0.4	-2.8	-0.7	-0.5
2013	ok	0.23	0.2	1.49e-03	4.7	4.7	4.7	4.7	3.71e-03	4.1	1.4	3.5	0.7	-0.2
2014	ok	0.23	0.2	1.14e-03	4.7	4.7	4.7	4.7	2.5	1.1	-0.2	-3.1	-0.7	-0.5
2015	ok	0.23	0.2	1.74e-03	4.7	4.7	4.7	4.7	0.1	4.5	1.2	3.6	0.8	-0.2
2016	ok	0.23	0.2	1.41e-03	4.7	4.7	4.7	4.7	2.9	1.1	-0.3	-3.2	-0.7	-0.5

2017	ok	0.23	0.2	1.79e-03	4.7	4.7	4.7	4.7	0.4	4.5	1.0	3.6	0.8	-0.2
2018	ok	0.23	0.2	1.40e-03	4.7	4.7	4.7	4.7	3.2	1.4	-0.4	-3.2	-0.7	-0.5
2019	ok	0.23	0.2	1.75e-03	4.7	4.7	4.7	4.7	0.3	3.2	1.4	3.6	0.7	-0.2
2020	ok	0.23	0.2	1.25e-03	4.7	4.7	4.7	4.7	3.6	1.4	-0.1	-3.3	-0.6	-0.5
2021	ok	0.23	0.2	1.66e-03	4.7	4.7	4.7	4.7	2.3	2.8	2.0	3.6	0.7	-0.2
2022	ok	0.23	0.2	1.02e-03	4.7	4.7	4.7	4.7	0.2	1.0	-8.74e-02	-3.3	-0.7	-0.5
2023	ok	0.23	0.2	1.42e-03	4.7	4.7	4.7	4.7	1.1	4.2	1.3	3.6	0.8	-0.2
2024	ok	0.23	0.2	9.63e-04	4.7	4.7	4.7	4.7	0.2	1.5	-4.09e-02	-3.4	-0.7	-0.5
2025	ok	0.23	0.2	1.35e-03	4.7	4.7	4.7	4.7	-2.6	4.5	1.1	3.7	0.8	-0.2
2026	ok	0.23	0.2	8.51e-04	4.7	4.7	4.7	4.7	0.5	1.4	-0.2	-3.4	-0.7	-0.5
2027	ok	0.23	0.2	1.23e-03	4.7	4.7	4.7	4.7	-2.3	4.5	0.8	3.7	0.8	-0.2
2028	ok	0.23	0.2	6.36e-04	4.7	4.7	4.7	4.7	0.9	1.4	-0.4	-3.5	-0.7	-0.5
2029	ok	0.23	0.2	1.04e-03	4.7	4.7	4.7	4.7	-1.8	4.4	0.7	3.7	0.8	-0.2
2030	ok	0.23	0.2	4.50e-04	4.7	4.7	4.7	4.7	1.4	1.5	-0.4	-3.5	-0.7	-0.5
2031	ok	0.23	0.2	8.79e-04	4.7	4.7	4.7	4.7	-1.7	3.1	1.2	3.6	0.7	-0.2
2032	ok	0.23	0.2	4.29e-04	4.7	4.7	4.7	4.7	1.9	1.4	-0.2	-3.5	-0.7	-0.5
2033	ok	0.23	0.2	7.51e-04	4.7	4.7	4.7	4.7	1.9	2.8	1.8	3.6	0.7	-0.2
2034	ok	0.23	0.2	2.30e-04	4.7	4.7	4.7	4.7	2.9	0.9	-0.1	-3.5	-0.8	-0.6
2035	ok	0.23	0.2	5.94e-04	4.7	4.7	4.7	4.7	0.3	4.2	1.3	3.6	0.8	-0.2
2036	ok	0.23	0.2	2.38e-04	4.7	4.7	4.7	4.7	3.2	1.4	-5.55e-02	-3.6	-0.7	-0.5
2037	ok	0.23	0.2	4.48e-04	4.7	4.7	4.7	4.7	0.3	4.5	1.3	3.6	0.8	-0.2
2038	ok	0.23	0.2	2.56e-04	4.7	4.7	4.7	4.7	2.2	1.7	1.5	-3.6	-0.7	-0.5
2039	ok	0.23	0.2	7.15e-04	4.7	4.7	4.7	4.7	0.7	4.7	1.1	3.6	0.8	-0.2
2040	ok	0.23	0.2	4.36e-04	4.7	4.7	4.7	4.7	0.5	1.8	-1.4	-3.6	-0.7	0.5
2041	ok	0.23	0.2	8.48e-04	4.7	4.7	4.7	4.7	-1.5	4.7	-1.1	3.5	0.7	0.2
2042	ok	0.23	0.2	5.77e-04	4.7	4.7	4.7	4.7	0.6	1.3	-1.4	-3.5	-0.7	0.5
2043	ok	0.23	0.2	7.23e-04	4.7	4.7	4.7	4.7	-1.2	2.9	-0.8	3.5	0.8	0.2
2044	ok	0.23	0.2	3.71e-04	4.7	4.7	4.7	4.7	3.7	0.8	-0.2	-3.4	-0.7	0.6
2045	ok	0.23	0.2	6.36e-04	4.7	4.7	4.7	4.7	1.7	2.9	1.8	3.3	0.7	-0.2
2046	ok	0.23	0.2	3.33e-04	4.7	4.7	4.7	4.7	0.9	1.6	1.2	-3.5	-0.7	-0.5
2047	ok	0.23	0.2	7.51e-04	4.7	4.7	4.7	4.7	0.6	4.3	-0.9	3.6	0.8	0.2
2048	ok	0.23	0.2	3.52e-04	4.7	4.7	4.7	4.7	1.8	1.1	0.4	-3.5	-0.7	0.5
2049	ok	0.23	0.2	9.31e-04	4.7	4.7	4.7	4.7	-1.6	4.5	-0.6	3.6	0.8	0.2
2050	ok	0.23	0.2	5.49e-04	4.7	4.7	4.7	4.7	1.2	1.5	0.4	-3.4	-0.7	0.5
2051	ok	0.23	0.2	1.15e-03	4.7	4.7	4.7	4.7	-2.2	4.6	-0.8	3.6	0.8	0.2
2052	ok	0.23	0.2	8.02e-04	4.7	4.7	4.7	4.7	0.8	1.5	0.2	-3.4	-0.7	0.5
2053	ok	0.23	0.2	1.30e-03	4.7	4.7	4.7	4.7	-2.7	4.5	-1.1	3.6	0.8	0.2
2054	ok	0.23	0.2	9.35e-04	4.7	4.7	4.7	4.7	0.4	1.5	6.30e-02	-3.4	-0.7	0.5
2055	ok	0.23	0.2	1.38e-03	4.7	4.7	4.7	4.7	1.2	4.3	-1.3	3.6	0.8	0.2
2056	ok	0.23	0.2	9.87e-04	4.7	4.7	4.7	4.7	0.2	1.0	4.20e-02	-3.3	-0.7	0.5
2057	ok	0.23	0.2	1.63e-03	4.7	4.7	4.7	4.7	1.0	4.2	-1.0	3.5	0.7	8.00e-02
2058	ok	0.23	0.2	1.22e-03	4.7	4.7	4.7	4.7	3.7	1.4	0.2	-3.2	-0.6	0.5
2059	ok	0.23	0.2	1.72e-03	4.7	4.7	4.7	4.7	0.9	4.3	-1.2	3.5	0.8	0.2
2060	ok	0.23	0.2	1.37e-03	4.7	4.7	4.7	4.7	3.8	1.1	0.4	-3.2	-0.7	0.5
2061	ok	0.23	0.2	1.76e-03	4.7	4.7	4.7	4.7	0.4	4.5	-1.0	3.5	0.8	0.2
2062	ok	0.23	0.2	1.36e-03	4.7	4.7	4.7	4.7	2.9	1.1	0.3	-3.2	-0.7	0.5
2063	ok	0.23	0.2	1.72e-03	4.7	4.7	4.7	4.7	7.74e-02	4.5	-1.2	3.5	0.7	0.2
2064	ok	0.23	0.2	1.11e-03	4.7	4.7	4.7	4.7	2.6	1.1	0.2	-3.1	-0.7	0.5
2065	ok	0.23	0.2	1.47e-03	4.7	4.7	4.7	4.7	-4.59e-02	4.2	-1.4	3.5	0.7	0.2
2066	ok	0.23	0.2	4.37e-04	4.7	4.7	4.7	4.7	-0.5	0.5	0.2	-3.5	-0.6	-0.3
2067	ok	0.23	0.2	7.81e-04	4.7	4.7	4.7	4.7	1.3	5.1	-2.2	4.0	0.8	-4.68e-03
2068	ok	0.23	0.2	1.07e-03	4.7	4.7	4.7	4.7	1.0	5.0	2.1	3.1	0.6	-5.53e-02
2069	ok	0.23	0.1	5.82e-04	4.7	4.7	4.7	4.7	1.4	3.3	1.1	-2.2	-0.5	-0.5
2070	ok	0.23	0.2	1.28e-03	4.7	4.7	4.7	4.7	1.4	3.4	2.8	2.7	0.5	-0.2
2071	ok	0.23	0.1	1.15e-03	4.7	4.7	4.7	4.7	1.2	2.4	1.3	-2.4	-0.5	-0.5
2072	ok	0.23	0.2	1.73e-03	4.7	4.7	4.7	4.7	1.2	3.3	2.6	2.7	0.5	-0.2
2073	ok	0.23	0.1	1.55e-03	4.7	4.7	4.7	4.7	1.2	2.5	1.2	-2.4	-0.5	-0.5
2074	ok	0.23	0.2	1.87e-03	4.7	4.7	4.7	4.7	1.3	3.2	2.5	2.8	0.5	-0.2
2075	ok	0.23	0.1	1.66e-03	4.7	4.7	4.7	4.7	1.3	2.5	1.2	-2.5	-0.5	-0.5
2076	ok	0.23	0.2	1.64e-03	4.7	4.7	4.7	4.7	1.4	3.1	2.9	2.8	0.6	-0.2
2077	ok	0.23	0.2	1.44e-03	4.7	4.7	4.7	4.7	1.3	2.4	1.5	-2.5	-0.5	-0.5
2078	ok	0.23	0.2	1.53e-03	4.7	4.7	4.7	4.7	1.4	2.1	1.1	2.7	0.5	-0.2
2079	ok	0.23	0.2	1.31e-03	4.7	4.7	4.7	4.7	1.3	1.9	1.8	-2.5	-0.5	-0.5
2080	ok	0.23	0.2	1.31e-03	4.7	4.7	4.7	4.7	1.4	2.9	2.7	2.8	0.6	-0.2
2081	ok	0.23	0.2	1.11e-03	4.7	4.7	4.7	4.7	1.3	2.4	1.4	-2.6	-0.5	-0.5
2082	ok	0.23	0.2	1.32e-03	4.7	4.7	4.7	4.7	1.4	2.9	2.5	2.8	0.6	-0.2
2083	ok	0.23	0.2	1.09e-03	4.7	4.7	4.7	4.7	-0.4	2.4	1.3	-2.6	-0.6	-0.5
2084	ok	0.23	0.2	1.43e-03	4.7	4.7	4.7	4.7	1.3	3.0	2.1	2.8	0.6	-0.2
2085	ok	0.23	0.2	1.18e-03	4.7	4.7	4.7	4.7	-0.1	2.4	1.0	-2.6	-0.6	-0.5
2086	ok	0.23	0.2	1.40e-03	4.7	4.7	4.7	4.7	1.2	2.9	2.0	2.8	0.6	-0.2
2087	ok	0.23	0.2	1.15e-03	4.7	4.7	4.7	4.7	0.1	2.3	0.9	-2.7	-0.6	-0.5
2088	ok	0.23	0.2	1.14e-03	4.7	4.7	4.7	4.7	1.2	2.8	2.5	2.8	0.6	-0.2
2089	ok	0.23	0.2	9.23e-04	4.7	4.7	4.7	4.7	0.4	2.2	1.3	-2.7	-0.5	-0.5
2090	ok	0.23	0.2	1.02e-03	4.7	4.7	4.7	4.7	0.9	1.4	1.9	2.7	0.5	-0.2
2091	ok	0.23	0.2	7.73e-04	4.7	4.7	4.7	4.7	0.9	1.8	1.7	-2.7	-0.6	-0.5
2092	ok	0.23	0.2	9.01e-04	4.7	4.7	4.7	4.7	1.3	2.8	2.5	2.8	0.6	-0.2
2093	ok	0.23	0.2	8.37e-04	4.7	4.7	4.7	4.7	1.2	2.3	1.4	-2.7	-0.6	-0.5
2094	ok	0.23	0.2	1.11e-03	4.7	4.7	4.7	4.7	1.7	2.9	2.5	2.7	0.5	-0.2
2095	ok	0.23	0.2	7.35e-04	4.7	4.7	4.7	4.7	1.8	2.3	1.5	-2.7	-0.6	-0.5

2096	ok	0.23	0.2	1.22e-03	4.7	4.7	4.7	4.7	1.7	3.4	2.1	2.7	0.5	-0.2
2097	ok	0.23	0.2	9.91e-04	4.7	4.7	4.7	4.7	9.07e-03	2.3	-1.4	-2.7	-0.6	0.5
2098	ok	0.23	0.1	1.46e-03	4.7	4.7	4.7	4.7	1.0	2.0	1.8	2.6	0.6	-0.2
2099	ok	0.23	0.2	9.12e-04	4.7	4.7	4.7	4.7	0.7	2.2	-1.3	-2.6	-0.5	0.5
2100	ok	0.23	0.1	1.06e-03	4.7	4.7	4.7	4.7	-0.2	2.2	3.1	2.6	0.5	-0.2
2101	ok	0.23	0.2	9.76e-04	4.7	4.7	4.7	4.7	3.13e-02	2.1	1.4	-2.7	-0.5	-0.5
2102	ok	0.23	0.1	1.02e-03	4.7	4.7	4.7	4.7	0.2	1.1	2.0	2.5	0.5	-0.2
2103	ok	0.23	0.2	8.62e-04	4.7	4.7	4.7	4.7	0.4	1.9	1.1	-2.7	-0.6	-0.5
2104	ok	0.23	0.2	1.13e-03	4.7	4.7	4.7	4.7	0.5	2.7	2.6	2.6	0.5	-0.2
2105	ok	0.23	0.2	1.09e-03	4.7	4.7	4.7	4.7	1.1	2.3	-1.0	-2.7	-0.6	0.5
2106	ok	0.23	0.2	1.39e-03	4.7	4.7	4.7	4.7	1.4	2.7	2.6	2.5	0.5	-0.2
2107	ok	0.23	0.2	1.13e-03	4.7	4.7	4.7	4.7	0.1	1.9	1.7	-2.7	-0.6	-0.5
2108	ok	0.23	0.2	1.44e-03	4.7	4.7	4.7	4.7	1.5	2.8	2.4	2.5	0.5	-0.2
2109	ok	0.23	0.2	1.07e-03	4.7	4.7	4.7	4.7	-0.1	1.9	1.5	-2.6	-0.6	-0.5
2110	ok	0.23	0.2	1.35e-03	4.7	4.7	4.7	4.7	-0.3	2.7	2.5	2.4	0.5	-0.2
2111	ok	0.23	0.2	1.09e-03	4.7	4.7	4.7	4.7	-0.4	1.8	1.5	-2.6	-0.5	-0.5
2112	ok	0.23	0.2	1.35e-03	4.7	4.7	4.7	4.7	-0.5	2.6	3.1	2.4	0.5	-0.2
2113	ok	0.23	0.2	1.30e-03	4.7	4.7	4.7	4.7	1.4	1.9	-1.8	-2.5	-0.5	0.5
2114	ok	0.23	0.2	1.53e-03	4.7	4.7	4.7	4.7	-0.8	0.9	2.7	2.2	0.4	-0.2
2115	ok	0.23	0.2	1.43e-03	4.7	4.7	4.7	4.7	1.3	2.4	-1.4	-2.5	-0.5	0.5
2116	ok	0.23	0.2	1.67e-03	4.7	4.7	4.7	4.7	1.4	3.2	-2.7	2.7	0.5	0.2
2117	ok	0.23	0.1	1.63e-03	4.7	4.7	4.7	4.7	1.3	2.4	-1.1	-2.5	-0.5	0.5
2118	ok	0.23	0.2	1.89e-03	4.7	4.7	4.7	4.7	1.2	2.6	-0.7	2.7	0.5	0.2
2119	ok	0.23	0.1	1.53e-03	4.7	4.7	4.7	4.7	1.3	2.4	-1.2	-2.4	-0.5	0.5
2120	ok	0.23	0.2	1.79e-03	4.7	4.7	4.7	4.7	1.1	2.0	-1.9	2.7	0.5	0.2
2121	ok	0.23	0.1	1.14e-03	4.7	4.7	4.7	4.7	1.2	2.4	-1.2	-2.4	-0.5	0.5
2122	ok	0.23	0.2	1.32e-03	4.7	4.7	4.7	4.7	1.4	3.5	-2.6	2.7	0.5	0.2
2123	ok	0.23	0.1	6.19e-04	4.7	4.7	4.7	4.7	-0.5	0.5	0.9	-2.7	-0.5	-0.3
2124	ok	0.23	0.2	1.04e-03	4.7	4.7	4.7	4.7	0.9	4.2	-1.4	3.0	0.7	5.95e-02
2125	ok	0.23	0.1	1.23e-03	4.7	4.7	4.7	4.7	1.0	5.7	2.1	2.1	0.4	-3.27e-02
2126	ok	0.23	0.1	7.55e-04	4.7	4.7	4.7	4.7	1.1	4.0	2.5	-1.5	-0.4	-0.4
2127	ok	0.23	0.1	1.54e-03	4.7	4.7	4.7	4.7	1.7	3.1	2.8	1.9	0.4	-0.2
2128	ok	0.23	0.1	1.34e-03	4.7	4.7	4.7	4.7	1.2	2.6	3.5	-1.7	-0.4	-0.5
2129	ok	0.23	0.1	2.03e-03	4.7	4.7	4.7	4.7	1.7	3.0	3.4	1.9	0.4	-0.2
2130	ok	0.23	0.1	1.84e-03	4.7	4.7	4.7	4.7	1.0	2.6	3.5	-1.7	-0.4	-0.5
2131	ok	0.23	0.1	2.24e-03	4.7	4.7	4.7	4.7	1.5	3.0	3.4	2.0	0.4	-0.2
2132	ok	0.23	0.1	2.03e-03	4.7	4.7	4.7	4.7	0.9	2.5	3.4	-1.7	-0.4	-0.5
2133	ok	0.23	0.1	2.10e-03	4.7	4.7	4.7	4.7	1.4	2.9	3.7	2.0	0.4	-0.2
2134	ok	0.23	0.1	1.90e-03	4.7	4.7	4.7	4.7	0.8	2.4	3.7	-1.8	-0.4	-0.5
2135	ok	0.23	0.1	1.98e-03	4.7	4.7	4.7	4.7	0.8	1.0	3.4	1.9	0.4	-0.2
2136	ok	0.23	0.1	1.77e-03	4.7	4.7	4.7	4.7	0.2	1.2	3.9	-1.8	-0.4	-0.5
2137	ok	0.23	0.1	1.81e-03	4.7	4.7	4.7	4.7	1.1	2.7	3.6	2.0	0.4	-0.2
2138	ok	0.23	0.1	1.60e-03	4.7	4.7	4.7	4.7	0.5	2.3	3.7	-1.8	-0.4	-0.5
2139	ok	0.23	0.1	1.86e-03	4.7	4.7	4.7	4.7	1.1	2.6	3.4	2.0	0.4	-0.2
2140	ok	0.23	0.1	1.63e-03	4.7	4.7	4.7	4.7	0.4	2.3	3.6	-1.8	-0.4	-0.5
2141	ok	0.23	0.1	2.00e-03	4.7	4.7	4.7	4.7	1.0	2.5	3.1	2.0	0.4	-0.2
2142	ok	0.23	0.1	1.77e-03	4.7	4.7	4.7	4.7	0.4	2.3	3.2	-1.9	-0.4	-0.5
2143	ok	0.23	0.1	2.04e-03	4.7	4.7	4.7	4.7	0.9	2.5	2.9	2.0	0.4	-0.2
2144	ok	0.23	0.1	1.80e-03	4.7	4.7	4.7	4.7	0.4	2.3	3.1	-1.9	-0.4	-0.5
2145	ok	0.23	0.1	1.84e-03	4.7	4.7	4.7	4.7	0.9	2.5	3.3	2.0	0.4	-0.2
2146	ok	0.23	0.1	1.62e-03	4.7	4.7	4.7	4.7	0.5	2.2	3.5	-1.9	-0.4	-0.5
2147	ok	0.23	0.1	1.72e-03	4.7	4.7	4.7	4.7	0.4	0.7	3.1	1.9	0.4	-0.2
2148	ok	0.23	0.1	1.51e-03	4.7	4.7	4.7	4.7	-0.4	2.0	-3.7	-1.9	-0.4	0.5
2149	ok	0.23	0.1	1.56e-03	4.7	4.7	4.7	4.7	1.1	2.4	3.4	1.9	0.4	-0.2
2150	ok	0.23	0.1	1.46e-03	4.7	4.7	4.7	4.7	-1.1	1.0	-3.1	-1.9	-0.4	0.5
2151	ok	0.23	0.1	1.68e-03	4.7	4.7	4.7	4.7	1.1	2.6	3.2	1.9	0.4	-0.2
2152	ok	0.23	0.1	1.41e-03	4.7	4.7	4.7	4.7	-1.2	0.9	-3.1	-1.9	-0.4	0.5
2153	ok	0.23	0.1	1.89e-03	4.7	4.7	4.7	4.7	0.8	1.6	2.8	1.9	0.4	-0.2
2154	ok	0.23	0.1	1.47e-03	4.7	4.7	4.7	4.7	-0.8	1.2	-2.6	-1.9	-0.4	0.5
2155	ok	0.23	0.1	1.61e-03	4.7	4.7	4.7	4.7	-0.2	2.0	3.5	1.9	0.4	-0.2
2156	ok	0.23	0.1	1.50e-03	4.7	4.7	4.7	4.7	-0.9	1.0	3.0	-1.9	-0.4	-0.5
2157	ok	0.23	0.1	1.55e-03	4.7	4.7	4.7	4.7	-0.5	2.9	3.4	1.8	0.3	-0.2
2158	ok	0.23	0.1	1.49e-03	4.7	4.7	4.7	4.7	-0.7	1.9	3.5	-1.9	-0.4	-0.5
2159	ok	0.23	0.1	1.67e-03	4.7	4.7	4.7	4.7	-1.0	0.3	3.1	1.8	0.3	-0.2
2160	ok	0.23	0.1	1.65e-03	4.7	4.7	4.7	4.7	0.8	2.2	-3.5	-1.9	-0.4	0.5
2161	ok	0.23	0.1	1.94e-03	4.7	4.7	4.7	4.7	-5.27e-02	1.8	3.5	1.8	0.4	-0.2
2162	ok	0.23	0.1	1.82e-03	4.7	4.7	4.7	4.7	-3.55e-02	1.1	-3.1	-1.9	-0.4	0.5
2163	ok	0.23	0.1	2.14e-03	4.7	4.7	4.7	4.7	6.61e-02	1.7	3.5	1.8	0.3	-0.2
2164	ok	0.23	0.1	1.79e-03	4.7	4.7	4.7	4.7	-0.1	1.0	-3.3	-1.9	-0.4	0.5
2165	ok	0.23	0.1	2.11e-03	4.7	4.7	4.7	4.7	0.1	1.7	3.4	1.7	0.3	-0.2
2166	ok	0.23	0.1	1.66e-03	4.7	4.7	4.7	4.7	-0.1	1.1	-3.8	-1.8	-0.4	0.5
2167	ok	0.23	0.1	1.96e-03	4.7	4.7	4.7	4.7	8.07e-02	1.7	3.5	1.7	0.3	-0.2
2168	ok	0.23	0.1	1.62e-03	4.7	4.7	4.7	4.7	-1.67e-02	1.1	-4.1	-1.8	-0.4	0.5
2169	ok	0.23	0.1	1.90e-03	4.7	4.7	4.7	4.7	6.03e-02	1.7	4.0	1.7	0.3	-0.2
2170	ok	0.23	0.1	1.78e-03	4.7	4.7	4.7	4.7	0.1	1.2	-3.8	-1.8	-0.4	0.5
2171	ok	0.23	0.1	1.97e-03	4.7	4.7	4.7	4.7	-0.6	0.1	3.9	1.5	0.3	-0.2
2172	ok	0.23	0.1	1.92e-03	4.7	4.7	4.7	4.7	0.8	2.3	-3.7	-1.8	-0.4	0.5
2173	ok	0.23	0.1	2.19e-03	4.7	4.7	4.7	4.7	1.5	2.6	-2.6	1.9	0.4	0.2
2174	ok	0.23	0.1	2.06e-03	4.7	4.7	4.7	4.7	0.5	1.3	-3.5	-1.7	-0.4	0.5

2175	ok	0.23	0.1	2.34e-03	4.7	4.7	4.7	4.7	1.1	1.2	-1.8	1.9	0.4	0.2
2176	ok	0.23	0.1	1.86e-03	4.7	4.7	4.7	4.7	1.0	2.4	-3.5	-1.7	-0.4	0.5
2177	ok	0.23	0.1	2.14e-03	4.7	4.7	4.7	4.7	1.3	1.2	-1.9	1.9	0.4	0.2
2178	ok	0.23	0.1	1.37e-03	4.7	4.7	4.7	4.7	1.1	2.5	-3.5	-1.7	-0.4	0.4
2179	ok	0.23	0.1	1.65e-03	4.7	4.7	4.7	4.7	1.7	2.8	-2.5	1.9	0.4	0.2
2180	ok	0.23	0.1	7.73e-04	4.7	4.7	4.7	4.7	-0.4	0.5	1.4	-1.8	-0.3	-0.3
2181	ok	0.23	0.1	1.21e-03	4.7	4.7	4.7	4.7	0.9	5.6	-2.1	2.1	0.4	3.35e-02
2182	ok	0.23	6.58e-02	1.40e-03	4.7	4.7	4.7	4.7	7.58e-02	4.8	1.5	1.2	0.5	-7.24e-02
2183	ok	0.23	6.83e-02	7.16e-04	4.7	4.7	4.7	4.7	1.9	3.6	2.2	-0.8	-0.3	-0.4
2184	ok	0.23	6.18e-02	1.40e-03	4.7	4.7	4.7	4.7	1.5	3.0	3.5	1.0	0.2	-0.2
2185	ok	0.23	7.55e-02	1.19e-03	4.7	4.7	4.7	4.7	1.8	1.2	3.9	-0.9	-0.3	-0.4
2186	ok	0.23	6.18e-02	1.88e-03	4.7	4.7	4.7	4.7	1.3	2.7	3.6	1.0	0.2	-0.2
2187	ok	0.23	7.68e-02	1.76e-03	4.7	4.7	4.7	4.7	1.7	1.2	3.9	-0.9	-0.4	-0.4
2188	ok	0.23	6.20e-02	2.22e-03	4.7	4.7	4.7	4.7	1.3	2.6	3.4	1.0	0.2	-0.2
2189	ok	0.23	7.76e-02	2.07e-03	4.7	4.7	4.7	4.7	1.5	1.1	3.8	-0.9	-0.4	-0.4
2190	ok	0.23	6.27e-02	2.24e-03	4.7	4.7	4.7	4.7	1.3	2.6	3.7	1.0	0.2	-0.2
2191	ok	0.23	8.00e-02	2.07e-03	4.7	4.7	4.7	4.7	1.4	0.9	4.1	-0.9	-0.4	-0.4
2192	ok	0.23	6.05e-02	2.22e-03	4.7	4.7	4.7	4.7	1.2	2.4	3.4	1.0	0.2	-0.2
2193	ok	0.23	7.83e-02	2.03e-03	4.7	4.7	4.7	4.7	1.2	0.9	4.2	-1.0	-0.4	-0.4
2194	ok	0.23	6.13e-02	2.12e-03	4.7	4.7	4.7	4.7	1.1	2.4	3.7	1.0	0.2	-0.2
2195	ok	0.23	7.98e-02	1.92e-03	4.7	4.7	4.7	4.7	1.0	0.9	4.4	-1.0	-0.4	-0.4
2196	ok	0.23	6.10e-02	2.19e-03	4.7	4.7	4.7	4.7	0.9	2.3	3.6	1.0	0.2	-0.2
2197	ok	0.23	8.02e-02	1.97e-03	4.7	4.7	4.7	4.7	0.9	0.9	4.1	-1.0	-0.4	-0.4
2198	ok	0.23	6.06e-02	2.34e-03	4.7	4.7	4.7	4.7	0.8	2.2	3.3	1.0	0.2	-0.2
2199	ok	0.23	7.96e-02	2.13e-03	4.7	4.7	4.7	4.7	0.7	0.8	3.7	-1.0	-0.4	-0.4
2200	ok	0.23	5.97e-02	2.42e-03	4.7	4.7	4.7	4.7	0.6	2.2	3.2	1.0	0.2	-0.2
2201	ok	0.23	7.91e-02	2.19e-03	4.7	4.7	4.7	4.7	0.4	0.8	3.4	-1.0	-0.4	-0.4
2202	ok	0.23	5.91e-02	2.27e-03	4.7	4.7	4.7	4.7	0.4	2.2	3.5	1.0	0.2	-0.2
2203	ok	0.23	8.08e-02	2.03e-03	4.7	4.7	4.7	4.7	-1.8	0.5	-4.1	-1.0	-0.4	0.4
2204	ok	0.23	5.62e-02	2.14e-03	4.7	4.7	4.7	4.7	0.2	2.1	3.2	1.0	0.2	-0.2
2205	ok	0.23	7.86e-02	1.88e-03	4.7	4.7	4.7	4.7	-1.24e-02	0.7	3.9	-1.0	-0.4	-0.4
2206	ok	0.23	5.58e-02	1.94e-03	4.7	4.7	4.7	4.7	0.2	2.2	3.5	1.0	0.2	-0.2
2207	ok	0.23	7.96e-02	1.76e-03	4.7	4.7	4.7	4.7	-1.8	0.7	-3.3	-1.0	-0.4	0.4
2208	ok	0.23	5.45e-02	2.00e-03	4.7	4.7	4.7	4.7	0.2	1.3	3.3	1.0	0.2	-0.2
2209	ok	0.23	7.82e-02	1.71e-03	4.7	4.7	4.7	4.7	-1.5	0.7	-3.3	-1.0	-0.4	0.4
2210	ok	0.23	5.38e-02	1.82e-03	4.7	4.7	4.7	4.7	-0.7	1.4	3.6	1.0	0.2	-0.2
2211	ok	0.23	7.77e-02	1.69e-03	4.7	4.7	4.7	4.7	-0.5	0.8	3.6	-1.0	-0.4	-0.4
2212	ok	0.23	5.06e-02	1.85e-03	4.7	4.7	4.7	4.7	-1.3	2.3	3.3	1.0	0.2	-0.2
2213	ok	0.23	7.88e-02	1.65e-03	4.7	4.7	4.7	4.7	-1.5	0.7	3.4	-1.0	-0.4	-0.4
2214	ok	0.23	5.63e-02	1.97e-03	4.7	4.7	4.7	4.7	-1.4	2.0	3.4	1.0	0.2	-0.2
2215	ok	0.23	7.91e-02	1.77e-03	4.7	4.7	4.7	4.7	-9.76e-02	0.8	-4.1	-1.0	-0.4	0.4
2216	ok	0.23	5.59e-02	2.05e-03	4.7	4.7	4.7	4.7	-1.8	1.7	3.3	0.9	0.1	-0.2
2217	ok	0.23	8.11e-02	2.02e-03	4.7	4.7	4.7	4.7	-2.1	0.4	3.9	-1.0	-0.4	-0.4
2218	ok	0.23	6.09e-02	2.28e-03	4.7	4.7	4.7	4.7	-1.7	1.4	4.0	0.9	0.2	-0.2
2219	ok	0.23	7.92e-02	2.22e-03	4.7	4.7	4.7	4.7	0.3	0.7	-3.5	-1.0	-0.4	0.4
2220	ok	0.23	6.04e-02	2.39e-03	4.7	4.7	4.7	4.7	-1.7	1.3	4.1	0.9	0.2	-0.2
2221	ok	0.23	7.93e-02	2.16e-03	4.7	4.7	4.7	4.7	0.6	0.7	-3.8	-1.0	-0.4	0.4
2222	ok	0.23	6.10e-02	2.32e-03	4.7	4.7	4.7	4.7	-1.7	1.3	3.9	0.9	0.1	-0.2
2223	ok	0.23	7.98e-02	2.01e-03	4.7	4.7	4.7	4.7	0.8	0.7	-4.2	-1.0	-0.4	0.4
2224	ok	0.23	6.11e-02	2.17e-03	4.7	4.7	4.7	4.7	-1.6	1.3	3.9	0.8	0.1	-0.2
2225	ok	0.23	7.94e-02	1.95e-03	4.7	4.7	4.7	4.7	0.9	0.7	-4.5	-1.0	-0.4	0.4
2226	ok	0.23	6.14e-02	2.13e-03	4.7	4.7	4.7	4.7	-1.4	1.4	4.3	0.8	0.1	-0.2
2227	ok	0.23	7.76e-02	2.04e-03	4.7	4.7	4.7	4.7	1.0	0.8	-4.2	-1.0	-0.4	0.4
2228	ok	0.23	5.81e-02	2.22e-03	4.7	4.7	4.7	4.7	-1.5	1.6	4.0	0.7	9.85e-02	-0.2
2229	ok	0.23	7.98e-02	2.10e-03	4.7	4.7	4.7	4.7	1.4	0.8	-4.2	-0.9	-0.4	0.4
2230	ok	0.23	6.35e-02	2.26e-03	4.7	4.7	4.7	4.7	-1.0	1.3	4.4	0.7	0.1	-0.2
2231	ok	0.23	7.73e-02	2.11e-03	4.7	4.7	4.7	4.7	1.4	0.9	-3.9	-0.9	-0.4	0.4
2232	ok	0.23	6.20e-02	2.24e-03	4.7	4.7	4.7	4.7	-0.5	1.3	4.1	0.7	0.1	-0.2
2233	ok	0.23	7.64e-02	1.78e-03	4.7	4.7	4.7	4.7	1.6	1.0	-4.0	-0.9	-0.4	0.4
2234	ok	0.23	6.17e-02	1.90e-03	4.7	4.7	4.7	4.7	0.1	1.3	3.2	0.6	8.20e-02	-0.2
2235	ok	0.23	7.51e-02	1.24e-03	4.7	4.7	4.7	4.7	1.7	1.0	-4.0	-0.9	-0.3	0.4
2236	ok	0.23	6.20e-02	1.41e-03	4.7	4.7	4.7	4.7	0.7	1.5	2.2	0.5	3.02e-02	-0.1
2237	ok	0.23	6.76e-02	7.37e-04	4.7	4.7	4.7	4.7	1.0	1.0	2.0	-1.0	-0.5	-0.2
2238	ok	0.23	6.37e-02	1.40e-03	4.7	4.7	4.7	4.7	-4.07e-02	4.8	-1.5	1.2	0.5	7.36e-02
2239	ok	0.23	4.02e-02	1.27e-03	4.7	4.7	4.7	4.7	2.2	2.5	-0.3	2.83e-02	0.2	-0.1
2240	ok	0.23	3.84e-02	1.27e-03	4.7	4.7	4.7	4.7	1.2	-0.9	2.6	0.3	0.3	-0.4
2241	ok	0.23	3.34e-02	1.19e-03	4.7	4.7	4.7	4.7	1.9	1.6	-4.0	0.3	5.62e-02	0.1
2242	ok	0.23	4.02e-02	1.64e-03	4.7	4.7	4.7	4.7	1.6	-0.5	4.2	0.3	0.2	-0.4
2243	ok	0.23	2.95e-02	1.85e-03	4.7	4.7	4.7	4.7	-4.69e-03	0.4	-4.7	-1.26e-02	8.20e-02	0.1
2244	ok	0.23	3.84e-02	2.03e-03	4.7	4.7	4.7	4.7	-0.7	-0.7	-4.1	-0.1	0.2	0.4
2245	ok	0.23	3.63e-02	2.35e-03	4.7	4.7	4.7	4.7	1.9	1.6	4.8	-0.2	1.77e-03	-0.1
2246	ok	0.23	3.94e-02	2.51e-03	4.7	4.7	4.7	4.7	-2.0	-0.8	-4.5	-0.2	0.2	0.4
2247	ok	0.23	3.65e-02	2.64e-03	4.7	4.7	4.7	4.7	1.7	1.4	4.8	-0.2	2.59e-03	-0.1
2248	ok	0.23	4.07e-02	2.65e-03	4.7	4.7	4.7	4.7	-2.9	-0.8	-4.3	-0.2	0.2	0.4
2249	ok	0.23	3.75e-02	2.66e-03	4.7	4.7	4.7	4.7	1.6	1.4	4.9	-0.2	1.05e-02	-0.1
2250	ok	0.23	3.96e-02	2.65e-03	4.7	4.7	4.7	4.7	-3.5	-0.8	-4.1	-0.2	0.2	0.4
2251	ok	0.23	3.55e-02	2.68e-03	4.7	4.7	4.7	4.7	1.3	1.3	5.1	-0.2	-3.75e-04	-0.1
2252	ok	0.23	4.15e-02	2.57e-03	4.7	4.7	4.7	4.7	-3.6	-0.7	-3.8	-0.2	0.1	0.4
2253	ok	0.23	3.64e-02	2.67e-03	4.7	4.7	4.7	4.7	1.4	1.3	5.1	-0.3	-6.26e-03	-0.1

2254	ok	0.23	4.18e-02	2.62e-03	4.7	4.7	4.7	4.7	-3.7	-0.7	-4.0	-0.2	0.1	0.4
2255	ok	0.23	3.60e-02	2.73e-03	4.7	4.7	4.7	4.7	1.2	1.3	4.8	-0.3	-9.18e-03	-0.1
2256	ok	0.23	4.10e-02	2.75e-03	4.7	4.7	4.7	4.7	-3.8	-0.6	-4.2	-0.2	0.1	0.4
2257	ok	0.23	3.46e-02	2.81e-03	4.7	4.7	4.7	4.7	0.7	1.1	4.5	-0.3	-8.67e-03	-0.1
2258	ok	0.23	4.02e-02	2.85e-03	4.7	4.7	4.7	4.7	-4.0	-0.6	-4.4	-0.2	0.1	0.4
2259	ok	0.23	3.34e-02	2.81e-03	4.7	4.7	4.7	4.7	-5.81e-03	1.0	4.3	-0.3	-4.32e-03	-0.2
2260	ok	0.23	3.99e-02	2.74e-03	4.7	4.7	4.7	4.7	-4.0	-0.7	-4.1	-0.2	0.1	0.4
2261	ok	0.23	3.29e-02	2.59e-03	4.7	4.7	4.7	4.7	-0.5	1.0	4.4	-0.3	6.43e-03	-0.2
2262	ok	0.23	3.78e-02	2.57e-03	4.7	4.7	4.7	4.7	-1.2	-0.3	4.0	-0.2	0.1	-0.5
2263	ok	0.23	3.09e-02	2.36e-03	4.7	4.7	4.7	4.7	-3.0	0.5	-4.1	-0.3	2.56e-03	0.2
2264	ok	0.23	3.94e-02	2.18e-03	4.7	4.7	4.7	4.7	-1.3	-0.3	4.3	-0.3	0.1	-0.4
2265	ok	0.23	2.88e-02	2.20e-03	4.7	4.7	4.7	4.7	-2.5	0.1	-3.9	-0.2	-1.99e-02	0.2
2266	ok	0.23	3.80e-02	2.04e-03	4.7	4.7	4.7	4.7	-2.2	-0.3	-3.5	-0.3	0.1	0.4
2267	ok	0.23	3.10e-02	1.94e-03	4.7	4.7	4.7	4.7	-1.4	1.1	-4.2	-0.3	-3.52e-02	0.2
2268	ok	0.23	3.75e-02	2.07e-03	4.7	4.7	4.7	4.7	-2.2	-8.57e-02	3.7	-0.2	0.1	-0.5
2269	ok	0.23	3.18e-02	2.13e-03	4.7	4.7	4.7	4.7	-1.0	0.9	-4.8	-0.3	-7.33e-03	0.2
2270	ok	0.23	3.77e-02	2.18e-03	4.7	4.7	4.7	4.7	-2.8	-0.4	3.5	-0.2	0.1	-0.4
2271	ok	0.23	3.10e-02	2.27e-03	4.7	4.7	4.7	4.7	-0.9	0.8	-4.8	-0.3	-2.73e-04	0.1
2272	ok	0.23	3.72e-02	2.43e-03	4.7	4.7	4.7	4.7	-3.6	-0.7	3.5	-0.2	0.1	-0.4
2273	ok	0.23	3.35e-02	2.48e-03	4.7	4.7	4.7	4.7	-0.4	1.0	-4.4	-0.3	5.61e-03	0.1
2274	ok	0.23	4.00e-02	2.64e-03	4.7	4.7	4.7	4.7	-3.8	-0.7	3.9	-0.2	0.1	-0.4
2275	ok	0.23	3.30e-02	2.73e-03	4.7	4.7	4.7	4.7	-2.64e-02	1.0	-4.2	-0.3	-1.99e-02	0.1
2276	ok	0.23	4.06e-02	2.79e-03	4.7	4.7	4.7	4.7	-3.8	-0.7	4.3	-0.2	0.1	-0.4
2277	ok	0.23	3.40e-02	2.74e-03	4.7	4.7	4.7	4.7	0.7	1.1	-4.4	-0.3	-2.48e-02	0.1
2278	ok	0.23	4.14e-02	2.70e-03	4.7	4.7	4.7	4.7	-3.6	-0.7	4.2	-0.2	0.1	-0.4
2279	ok	0.23	3.53e-02	2.66e-03	4.7	4.7	4.7	4.7	1.2	1.2	-4.7	-0.3	-2.52e-02	0.1
2280	ok	0.23	4.22e-02	2.58e-03	4.7	4.7	4.7	4.7	-3.5	-0.7	3.9	-0.2	0.1	-0.4
2281	ok	0.23	3.57e-02	2.62e-03	4.7	4.7	4.7	4.7	1.4	1.3	-5.0	-0.2	-2.15e-02	0.1
2282	ok	0.23	4.18e-02	2.55e-03	4.7	4.7	4.7	4.7	-3.5	-0.8	3.8	-0.2	0.1	-0.4
2283	ok	0.23	3.44e-02	2.63e-03	4.7	4.7	4.7	4.7	1.2	1.3	-5.0	-0.2	-1.47e-02	0.1
2284	ok	0.23	3.94e-02	2.68e-03	4.7	4.7	4.7	4.7	-3.5	-0.9	4.1	-0.2	0.2	-0.4
2285	ok	0.23	3.77e-02	2.65e-03	4.7	4.7	4.7	4.7	1.7	1.4	-4.9	-0.2	1.14e-02	0.1
2286	ok	0.23	4.09e-02	2.63e-03	4.7	4.7	4.7	4.7	-2.9	-0.9	4.3	-0.2	0.2	-0.4
2287	ok	0.23	3.59e-02	2.62e-03	4.7	4.7	4.7	4.7	1.7	1.4	-4.7	-0.2	-1.09e-02	0.1
2288	ok	0.23	4.00e-02	2.51e-03	4.7	4.7	4.7	4.7	-1.9	-0.8	4.5	-0.2	0.1	-0.4
2289	ok	0.23	3.57e-02	2.29e-03	4.7	4.7	4.7	4.7	1.9	1.6	-4.7	-0.2	-1.22e-02	0.1
2290	ok	0.23	3.90e-02	2.02e-03	4.7	4.7	4.7	4.7	-0.5	-0.7	4.1	-0.2	0.2	-0.4
2291	ok	0.23	2.97e-02	1.79e-03	4.7	4.7	4.7	4.7	4.35e-02	0.4	4.6	-1.09e-02	6.85e-02	-0.1
2292	ok	0.23	4.09e-02	1.66e-03	4.7	4.7	4.7	4.7	1.7	-0.6	-4.2	0.3	0.1	0.4
2293	ok	0.23	3.36e-02	1.14e-03	4.7	4.7	4.7	4.7	1.9	1.6	4.0	0.3	4.26e-02	-0.1
2294	ok	0.23	3.79e-02	1.26e-03	4.7	4.7	4.7	4.7	1.4	-0.9	-2.6	0.3	0.3	0.4
2295	ok	0.23	4.03e-02	1.26e-03	4.7	4.7	4.7	4.7	2.2	2.5	0.3	2.46e-02	0.2	0.1

Nodo	**x/d**	**V N/M**	**ver. rid**	**Af pr-**	**Af pr+**	**Af sec-**	**Af sec+**	**N x**	**N y**	**N xy**	**M x**	**M y**	**M xy**
								-6.09	-1.60	-4.99	-4.74	-0.77	-0.63
	0.23	0.29	2.85e-03	4.67	4.67	4.67	4.67	5.87	5.80	5.08	5.33	0.95	0.56

Nodo	**Stato**	**Max tau** daN/cm2	**Ver V pr**	**Ver V sec**	**Af V pr**	**Af V sec**	**V pr** kN/ m	**V sec** kN/ m
1954	ok	2.10						
1955	ok	2.07						
1956	ok	1.91						
1957	ok	1.90						
1958	ok	1.94						
1959	ok	1.93						
1960	ok	1.95						
1961	ok	1.94						
1962	ok	1.98						
1963	ok	1.97						
1964	ok	2.09						
1965	ok	2.05						
1966	ok	2.01						
1967	ok	1.99						
1968	ok	2.02						
1969	ok	2.00						
1970	ok	2.04						
1971	ok	2.02						
1972	ok	2.04						
1973	ok	2.02						
1974	ok	2.05						
1975	ok	2.03						
1976	ok	2.16						
1977	ok	2.11						
1978	ok	2.05						
1979	ok	2.02						
1980	ok	2.05						
1981	ok	2.02						

1982	ok	2.05
1983	ok	2.02
1984	ok	2.04
1985	ok	2.01
1986	ok	2.04
1987	ok	2.08
1988	ok	2.13
1989	ok	2.05
1990	ok	2.03
1991	ok	2.00
1992	ok	2.02
1993	ok	1.99
1994	ok	2.01
1995	ok	1.98
1996	ok	2.00
1997	ok	1.96
1998	ok	1.98
1999	ok	2.03
2000	ok	2.08
2001	ok	1.94
2002	ok	1.95
2003	ok	1.91
2004	ok	1.93
2005	ok	1.90
2006	ok	1.91
2007	ok	1.88
2008	ok	1.89
2009	ok	2.04
2010	ok	2.07
2011	ok	1.32
2012	ok	1.33
2013	ok	1.29
2014	ok	1.35
2015	ok	1.32
2016	ok	1.37
2017	ok	1.34
2018	ok	1.39
2019	ok	1.33
2020	ok	1.38
2021	ok	1.25
2022	ok	1.30
2023	ok	1.37
2024	ok	1.41
2025	ok	1.38
2026	ok	1.43
2027	ok	1.39
2028	ok	1.44
2029	ok	1.40
2030	ok	1.44
2031	ok	1.38
2032	ok	1.43
2033	ok	1.28
2034	ok	1.38
2035	ok	1.39
2036	ok	1.44
2037	ok	1.40
2038	ok	1.44
2039	ok	1.39
2040	ok	1.43
2041	ok	1.38
2042	ok	1.40
2043	ok	1.38
2044	ok	1.37
2045	ok	1.25
2046	ok	1.42
2047	ok	1.37
2048	ok	1.43
2049	ok	1.39
2050	ok	1.43
2051	ok	1.38
2052	ok	1.42
2053	ok	1.37
2054	ok	1.40
2055	ok	1.36
2056	ok	1.29
2057	ok	1.24
2058	ok	1.37
2059	ok	1.32
2060	ok	1.38

2061	ok	1.33
2062	ok	1.36
2063	ok	1.31
2064	ok	1.34
2065	ok	1.28
2066	ok	1.31
2067	ok	1.31
2068	ok	1.12
2069	ok	1.10
2070	ok	1.06
2071	ok	1.08
2072	ok	1.07
2073	ok	1.09
2074	ok	1.08
2075	ok	1.10
2076	ok	1.06
2077	ok	1.08
2078	ok	1.07
2079	ok	1.09
2080	ok	1.11
2081	ok	1.13
2082	ok	1.11
2083	ok	1.13
2084	ok	1.12
2085	ok	1.14
2086	ok	1.12
2087	ok	1.14
2088	ok	1.09
2089	ok	1.11
2090	ok	1.10
2091	ok	1.12
2092	ok	1.13
2093	ok	1.15
2094	ok	1.12
2095	ok	1.14
2096	ok	1.10
2097	ok	1.12
2098	ok	1.11
2099	ok	1.11
2100	ok	1.11
2101	ok	1.09
2102	ok	1.07
2103	ok	1.10
2104	ok	1.08
2105	ok	1.13
2106	ok	1.11
2107	ok	1.13
2108	ok	1.11
2109	ok	1.12
2110	ok	1.10
2111	ok	1.12
2112	ok	1.10
2113	ok	1.08
2114	ok	1.06
2115	ok	1.07
2116	ok	1.04
2117	ok	1.09
2118	ok	1.07
2119	ok	1.08
2120	ok	1.06
2121	ok	1.07
2122	ok	1.05
2123	ok	1.09
2124	ok	1.11
2125	ok	0.83
2126	ok	0.79
2127	ok	0.75
2128	ok	0.77
2129	ok	0.75
2130	ok	0.77
2131	ok	0.76
2132	ok	0.78
2133	ok	0.76
2134	ok	0.78
2135	ok	0.73
2136	ok	0.75
2137	ok	0.77
2138	ok	0.79
2139	ok	0.77

2140	ok	0.79
2141	ok	0.78
2142	ok	0.80
2143	ok	0.78
2144	ok	0.80
2145	ok	0.77
2146	ok	0.79
2147	ok	0.74
2148	ok	0.76
2149	ok	0.77
2150	ok	0.79
2151	ok	0.75
2152	ok	0.78
2153	ok	0.76
2154	ok	0.77
2155	ok	0.76
2156	ok	0.77
2157	ok	0.75
2158	ok	0.77
2159	ok	0.73
2160	ok	0.79
2161	ok	0.77
2162	ok	0.80
2163	ok	0.78
2164	ok	0.79
2165	ok	0.77
2166	ok	0.79
2167	ok	0.77
2168	ok	0.79
2169	ok	0.77
2170	ok	0.74
2171	ok	0.72
2172	ok	0.77
2173	ok	0.75
2174	ok	0.78
2175	ok	0.76
2176	ok	0.77
2177	ok	0.75
2178	ok	0.77
2179	ok	0.75
2180	ok	0.78
2181	ok	0.82
2182	ok	0.53
2183	ok	0.59
2184	ok	0.46
2185	ok	0.58
2186	ok	0.46
2187	ok	0.59
2188	ok	0.47
2189	ok	0.60
2190	ok	0.46
2191	ok	0.59
2192	ok	0.46
2193	ok	0.58
2194	ok	0.48
2195	ok	0.59
2196	ok	0.48
2197	ok	0.59
2198	ok	0.48
2199	ok	0.59
2200	ok	0.48
2201	ok	0.60
2202	ok	0.47
2203	ok	0.59
2204	ok	0.47
2205	ok	0.57
2206	ok	0.48
2207	ok	0.58
2208	ok	0.47
2209	ok	0.58
2210	ok	0.49
2211	ok	0.58
2212	ok	0.46
2213	ok	0.58
2214	ok	0.48
2215	ok	0.58
2216	ok	0.47
2217	ok	0.59
2218	ok	0.48

2219	ok	0.60
2220	ok	0.49
2221	ok	0.59
2222	ok	0.49
2223	ok	0.59
2224	ok	0.48
2225	ok	0.59
2226	ok	0.48
2227	ok	0.57
2228	ok	0.46
2229	ok	0.60
2230	ok	0.47
2231	ok	0.59
2232	ok	0.47
2233	ok	0.59
2234	ok	0.47
2235	ok	0.58
2236	ok	0.46
2237	ok	0.58
2238	ok	0.53
2239	ok	0.44
2240	ok	0.44
2241	ok	0.37
2242	ok	0.39
2243	ok	0.42
2244	ok	0.37
2245	ok	0.41
2246	ok	0.37
2247	ok	0.41
2248	ok	0.37
2249	ok	0.41
2250	ok	0.35
2251	ok	0.39
2252	ok	0.36
2253	ok	0.38
2254	ok	0.36
2255	ok	0.37
2256	ok	0.36
2257	ok	0.37
2258	ok	0.36
2259	ok	0.37
2260	ok	0.35
2261	ok	0.38
2262	ok	0.34
2263	ok	0.37
2264	ok	0.34
2265	ok	0.32
2266	ok	0.34
2267	ok	0.36
2268	ok	0.34
2269	ok	0.37
2270	ok	0.33
2271	ok	0.38
2272	ok	0.34
2273	ok	0.39
2274	ok	0.36
2275	ok	0.37
2276	ok	0.36
2277	ok	0.37
2278	ok	0.36
2279	ok	0.37
2280	ok	0.36
2281	ok	0.37
2282	ok	0.35
2283	ok	0.38
2284	ok	0.35
2285	ok	0.41
2286	ok	0.37
2287	ok	0.40
2288	ok	0.36
2289	ok	0.40
2290	ok	0.37
2291	ok	0.41
2292	ok	0.39
2293	ok	0.38
2294	ok	0.44
2295	ok	0.44

Nodo	**Max tau**	**Ver V pr**	**Ver V sec**	**Af V pr**	**Af V sec**	**V pr**	**V sec**

2.16

Macro Guscio	Spessore	Id Materiale	Id Criterio	Progettazione
	cm			
34	15.00	1	1	Singolo elemento

Nodo	Stato	x/d	V N/M	ver. rid	Af pr-	Af pr+	Af sec-	Af sec+	N x	N y	N xy	M x	M y	M xy
									kN/ m	kN/ m	kN/ m	kN	kN	kN
2718	ok	0.23	0.3	9.78e-04	4.7	4.7	4.7	4.7	0.9	4.1	2.5	5.3	0.6	-7.31e-02
2719	ok	0.23	0.2	2.09e-03	4.7	4.7	4.7	4.7	-1.0	-1.1	4.46e-02	4.0	0.9	-0.6
2720	ok	0.23	0.3	1.06e-03	4.7	4.7	4.7	4.7	3.7	2.0	3.6	4.5	0.8	-0.2
2721	ok	0.23	0.2	2.44e-03	4.7	4.7	4.7	4.7	1.1	-0.7	1.4	-3.9	-0.6	-0.4
2722	ok	0.23	0.3	1.82e-03	4.7	4.7	4.7	4.7	4.6	2.6	3.5	4.4	0.9	-0.2
2723	ok	0.23	0.2	3.01e-03	4.7	4.7	4.7	4.7	2.4	-1.2	1.5	-3.9	-0.6	-0.4
2724	ok	0.23	0.3	2.26e-03	4.7	4.7	4.7	4.7	6.1	2.5	3.3	4.5	0.9	-0.2
2725	ok	0.23	0.2	3.25e-03	4.7	4.7	4.7	4.7	3.9	-1.2	1.5	-4.0	-0.6	-0.4
2726	ok	0.23	0.3	2.46e-03	4.7	4.7	4.7	4.7	6.7	1.7	3.3	4.7	0.9	-0.2
2727	ok	0.23	0.2	3.59e-03	4.7	4.7	4.7	4.7	-8.3	-1.6	1.8	-4.4	-0.6	-0.4
2728	ok	0.23	0.2	3.30e-03	4.7	4.7	4.7	4.7	-5.5	3.0	3.0	4.8	0.9	-5.74e-02
2729	ok	0.23	0.3	3.70e-03	4.7	4.7	4.7	4.7	-7.9	-1.1	1.6	-4.2	-0.7	-0.4
2730	ok	0.23	0.2	2.25e-03	4.7	4.7	4.7	4.7	-3.9	1.9	3.2	4.6	0.9	-0.2
2731	ok	0.23	0.3	3.19e-03	4.7	4.7	4.7	4.7	-7.5	-1.2	1.5	-4.2	-0.6	-0.4
2732	ok	0.23	0.2	2.20e-03	4.7	4.7	4.7	4.7	-3.6	2.7	3.2	4.5	0.9	-0.2
2733	ok	0.23	0.2	3.19e-03	4.7	4.7	4.7	4.7	-7.5	-1.3	1.5	-4.2	-0.6	-0.4
2734	ok	0.23	0.2	2.10e-03	4.7	4.7	4.7	4.7	-3.4	2.7	3.1	4.5	0.9	-0.2
2735	ok	0.23	0.3	2.91e-03	4.7	4.7	4.7	4.7	-6.8	-1.2	1.4	-4.3	-0.6	-0.4
2736	ok	0.23	0.2	1.80e-03	4.7	4.7	4.7	4.7	-2.3	2.0	3.0	4.5	0.9	-0.2
2737	ok	0.23	0.3	2.43e-03	4.7	4.7	4.7	4.7	-5.6	-1.1	1.3	-4.3	-0.7	-0.4
2738	ok	0.23	0.3	1.24e-03	4.7	4.7	4.7	4.7	-0.9	1.7	3.1	4.7	0.9	-0.2
2739	ok	0.23	0.3	2.40e-03	4.7	4.7	4.7	4.7	-4.5	-1.4	1.6	-4.7	-0.7	-0.4
2740	ok	0.23	0.3	1.67e-03	4.7	4.7	4.7	4.7	-1.3	2.3	2.8	4.8	0.9	-7.26e-02
2741	ok	0.23	0.3	2.39e-03	4.7	4.7	4.7	4.7	-3.0	-0.9	1.4	-4.5	-0.7	-0.5
2742	ok	0.23	0.3	1.10e-03	4.7	4.7	4.7	4.7	1.0	1.7	2.9	4.6	0.9	-0.2
2743	ok	0.23	0.3	1.26e-03	4.7	4.7	4.7	4.7	-2.3	-1.0	1.3	-4.4	-0.7	-0.4
2744	ok	0.23	0.3	6.93e-04	4.7	4.7	4.7	4.7	3.3	1.8	3.2	4.5	0.9	-0.2
2745	ok	0.23	0.2	1.15e-03	4.7	4.7	4.7	4.7	-1.8	-1.0	1.2	-4.4	-0.7	-0.4
2746	ok	0.23	0.3	7.79e-04	4.7	4.7	4.7	4.7	2.8	2.5	2.9	4.4	0.9	-0.2
2747	ok	0.23	0.2	1.24e-03	4.7	4.7	4.7	4.7	-1.7	-1.3	1.3	-4.4	-0.7	-0.4
2748	ok	0.23	0.3	9.17e-04	4.7	4.7	4.7	4.7	4.5	2.5	3.5	4.5	0.9	-0.3
2749	ok	0.23	0.3	2.10e-03	4.7	4.7	4.7	4.7	-3.1	-1.8	-1.3	-4.5	-0.8	0.5
2750	ok	0.23	0.3	7.99e-04	4.7	4.7	4.7	4.7	1.3	1.5	-2.6	4.7	1.0	-5.28e-02
2751	ok	0.23	0.3	2.67e-03	4.7	4.7	4.7	4.7	2.5	-1.6	1.5	-4.8	-0.8	-0.5
2752	ok	0.23	0.3	2.04e-03	4.7	4.7	4.7	4.7	6.4	3.0	2.8	4.6	0.9	-9.32e-02
2753	ok	0.23	0.3	2.59e-03	4.7	4.7	4.7	4.7	-5.6	-1.4	-1.7	-4.7	-0.7	0.4
2754	ok	0.23	0.3	1.43e-03	4.7	4.7	4.7	4.7	-1.5	1.8	-3.2	4.6	0.9	0.2
2755	ok	0.23	0.3	2.74e-03	4.7	4.7	4.7	4.7	-6.2	-1.1	-1.4	-4.4	-0.7	0.4
2756	ok	0.23	0.3	1.89e-03	4.7	4.7	4.7	4.7	-2.8	2.0	-3.1	4.5	0.9	0.2
2757	ok	0.23	0.3	3.12e-03	4.7	4.7	4.7	4.7	5.1	-1.2	1.6	-4.3	-0.7	-0.4
2758	ok	0.23	0.2	2.11e-03	4.7	4.7	4.7	4.7	-3.6	2.7	-3.3	4.5	0.9	0.2
2759	ok	0.23	0.3	3.31e-03	4.7	4.7	4.7	4.7	5.2	-1.1	1.6	-4.3	-0.7	-0.3
2760	ok	0.23	0.2	2.16e-03	4.7	4.7	4.7	4.7	-3.7	2.7	-3.3	4.5	0.9	0.2
2761	ok	0.23	0.3	3.25e-03	4.7	4.7	4.7	4.7	5.7	-1.0	1.6	-4.2	-0.7	-0.3
2762	ok	0.23	0.3	2.25e-03	4.7	4.7	4.7	4.7	-3.4	2.6	-3.3	4.5	0.9	0.2
2763	ok	0.23	0.3	3.72e-03	4.7	4.7	4.7	4.7	5.6	-1.5	1.9	-4.5	-0.7	-0.3
2764	ok	0.23	0.2	3.36e-03	4.7	4.7	4.7	4.7	-5.7	3.0	-3.0	4.7	0.9	5.95e-02
2765	ok	0.23	0.2	3.64e-03	4.7	4.7	4.7	4.7	-8.4	-1.6	-1.8	-4.4	-0.6	0.4
2766	ok	0.23	0.3	1.97e-03	4.7	4.7	4.7	4.7	6.9	1.7	-3.4	4.6	0.8	0.2
2767	ok	0.23	0.2	3.38e-03	4.7	4.7	4.7	4.7	-7.7	-1.2	-1.5	-4.0	-0.6	0.4
2768	ok	0.23	0.3	2.22e-03	4.7	4.7	4.7	4.7	6.1	2.5	-3.4	4.4	0.9	0.2
2769	ok	0.23	0.2	3.01e-03	4.7	4.7	4.7	4.7	-5.2	-1.1	2.1	-4.0	-0.6	-0.3
2770	ok	0.23	0.3	1.78e-03	4.7	4.7	4.7	4.7	4.5	2.6	-3.6	4.4	0.9	0.2
2771	ok	0.23	0.2	2.42e-03	4.7	4.7	4.7	4.7	-4.3	-1.1	2.0	-3.9	-0.6	-0.3
2772	ok	0.23	0.3	9.86e-04	4.7	4.7	4.7	4.7	3.6	2.6	-3.5	4.4	0.8	0.2
2773	ok	0.23	0.2	2.06e-03	4.7	4.7	4.7	4.7	-3.7	-1.4	1.7	-4.7	-0.7	-0.3
2774	ok	0.23	0.3	9.32e-04	4.7	4.7	4.7	4.7	0.8	4.1	-2.5	5.3	0.6	7.43e-02
2775	ok	0.23	0.2	5.48e-04	4.7	4.7	4.7	4.7	0.7	3.4	2.1	4.1	0.9	5.89e-03
2776	ok	0.23	0.2	6.29e-04	4.7	4.7	4.7	4.7	2.4	0.8	-0.9	-2.8	-0.7	-0.5
2777	ok	0.23	0.2	1.37e-03	4.7	4.7	4.7	4.7	0.5	2.7	2.2	3.6	0.7	-0.2
2778	ok	0.23	0.2	1.38e-03	4.7	4.7	4.7	4.7	3.1	1.0	0.4	-3.2	-0.7	-0.5
2779	ok	0.23	0.2	1.77e-03	4.7	4.7	4.7	4.7	1.1	3.6	1.8	3.6	0.8	-0.2
2780	ok	0.23	0.2	1.76e-03	4.7	4.7	4.7	4.7	3.8	1.1	0.2	-3.2	-0.7	-0.5
2781	ok	0.23	0.2	2.06e-03	4.7	4.7	4.7	4.7	1.8	3.5	1.4	3.6	0.8	-0.2
2782	ok	0.23	0.2	1.98e-03	4.7	4.7	4.7	4.7	4.2	1.1	0.2	-3.3	-0.7	-0.5

2783	ok	0.23	0.2	2.30e-03	4.7	4.7	4.7	4.7	1.6	2.6	1.9	3.7	0.8	-0.2
2784	ok	0.23	0.2	1.80e-03	4.7	4.7	4.7	4.7	4.2	0.8	0.8	-3.3	-0.6	-0.5
2785	ok	0.23	0.2	2.37e-03	4.7	4.7	4.7	4.7	3.7	2.7	1.9	3.5	0.7	-0.2
2786	ok	0.23	0.2	2.32e-03	4.7	4.7	4.7	4.7	5.0	1.0	-1.42e-02	-3.3	-0.7	-0.5
2787	ok	0.23	0.2	2.60e-03	4.7	4.7	4.7	4.7	1.8	2.4	1.6	3.7	0.8	-0.2
2788	ok	0.23	0.2	1.89e-03	4.7	4.7	4.7	4.7	4.5	1.2	0.4	-3.4	-0.7	-0.5
2789	ok	0.23	0.2	2.34e-03	4.7	4.7	4.7	4.7	1.9	3.4	1.4	3.7	0.8	-0.2
2790	ok	0.23	0.2	1.77e-03	4.7	4.7	4.7	4.7	4.3	1.2	0.3	-3.5	-0.7	-0.5
2791	ok	0.23	0.2	2.24e-03	4.7	4.7	4.7	4.7	1.6	3.5	1.1	3.7	0.8	-0.2
2792	ok	0.23	0.2	1.63e-03	4.7	4.7	4.7	4.7	-2.1	1.2	7.86e-03	-3.5	-0.7	-0.5
2793	ok	0.23	0.2	1.96e-03	4.7	4.7	4.7	4.7	1.5	3.4	0.9	3.7	0.8	-0.2
2794	ok	0.23	0.2	1.47e-03	4.7	4.7	4.7	4.7	-1.7	1.2	-5.10e-02	-3.5	-0.7	-0.5
2795	ok	0.23	0.2	1.75e-03	4.7	4.7	4.7	4.7	0.6	2.5	1.6	3.7	0.8	-0.2
2796	ok	0.23	0.2	1.29e-03	4.7	4.7	4.7	4.7	-1.1	1.0	-1.7	-3.6	-0.7	0.5
2797	ok	0.23	0.2	1.42e-03	4.7	4.7	4.7	4.7	-1.9	2.1	1.6	3.5	0.7	-0.2
2798	ok	0.23	0.2	1.02e-03	4.7	4.7	4.7	4.7	-0.3	0.9	-0.1	-3.5	-0.8	-0.5
2799	ok	0.23	0.2	1.49e-03	4.7	4.7	4.7	4.7	-2.7	2.4	1.3	3.7	0.8	-0.2
2800	ok	0.23	0.2	9.47e-04	4.7	4.7	4.7	4.7	0.1	1.1	0.2	-3.6	-0.7	-0.5
2801	ok	0.23	0.2	1.10e-03	4.7	4.7	4.7	4.7	-2.1	2.7	1.5	3.6	0.8	-0.2
2802	ok	0.23	0.2	8.33e-04	4.7	4.7	4.7	4.7	-0.8	1.1	1.7	-3.6	-0.8	-0.5
2803	ok	0.23	0.2	1.05e-03	4.7	4.7	4.7	4.7	-0.9	3.4	1.0	3.6	0.8	-0.2
2804	ok	0.23	0.2	7.41e-04	4.7	4.7	4.7	4.7	1.9	1.3	-0.1	-3.7	-0.8	-0.5
2805	ok	0.23	0.2	1.34e-03	4.7	4.7	4.7	4.7	-0.8	1.7	2.3	3.6	0.8	-4.17e-02
2806	ok	0.23	0.2	8.56e-04	4.7	4.7	4.7	4.7	2.5	1.5	-9.07e-02	-3.6	-0.8	0.6
2807	ok	0.23	0.2	3.10e-03	4.7	4.7	4.7	4.7	-0.1	3.9	-1.1	3.2	0.8	7.14e-02
2808	ok	0.23	0.2	2.08e-03	4.7	4.7	4.7	4.7	5.3	0.5	0.6	-3.4	-0.7	-0.7
2809	ok	0.23	0.2	2.00e-03	4.7	4.7	4.7	4.7	3.7	2.3	1.7	3.4	0.7	-0.2
2810	ok	0.23	0.2	1.91e-03	4.7	4.7	4.7	4.7	4.2	1.5	1.6	-3.5	-0.7	-0.5
2811	ok	0.23	0.2	2.07e-03	4.7	4.7	4.7	4.7	-4.6	2.3	-1.8	3.6	0.7	0.2
2812	ok	0.23	0.2	1.72e-03	4.7	4.7	4.7	4.7	-1.9	1.3	-9.75e-02	-3.5	-0.7	0.5
2813	ok	0.23	0.2	2.13e-03	4.7	4.7	4.7	4.7	-4.8	3.4	-1.1	3.6	0.8	0.2
2814	ok	0.23	0.2	1.79e-03	4.7	4.7	4.7	4.7	-2.2	1.3	-0.1	-3.5	-0.7	0.5
2815	ok	0.23	0.2	2.23e-03	4.7	4.7	4.7	4.7	-5.1	3.5	-1.3	3.6	0.8	0.2
2816	ok	0.23	0.2	1.84e-03	4.7	4.7	4.7	4.7	-2.3	1.3	-0.4	-3.4	-0.7	0.5
2817	ok	0.23	0.2	2.28e-03	4.7	4.7	4.7	4.7	2.3	3.4	-1.6	3.6	0.8	0.2
2818	ok	0.23	0.2	1.95e-03	4.7	4.7	4.7	4.7	-3.1	0.7	2.0	-3.5	-0.7	-0.4
2819	ok	0.23	0.2	2.58e-03	4.7	4.7	4.7	4.7	2.5	3.1	-1.7	3.7	0.8	0.2
2820	ok	0.23	0.2	2.31e-03	4.7	4.7	4.7	4.7	5.0	1.1	7.69e-02	-3.3	-0.7	0.5
2821	ok	0.23	0.2	2.43e-03	4.7	4.7	4.7	4.7	2.9	2.7	-0.8	3.4	0.7	7.78e-02
2822	ok	0.23	0.2	1.81e-03	4.7	4.7	4.7	4.7	-2.6	0.9	2.1	-3.3	-0.7	-0.4
2823	ok	0.23	0.2	2.21e-03	4.7	4.7	4.7	4.7	1.8	2.5	-2.0	3.6	0.7	0.2
2824	ok	0.23	0.2	1.91e-03	4.7	4.7	4.7	4.7	4.5	1.3	-0.2	-3.3	-0.7	0.5
2825	ok	0.23	0.2	2.06e-03	4.7	4.7	4.7	4.7	1.9	3.5	-1.5	3.6	0.8	0.2
2826	ok	0.23	0.2	1.69e-03	4.7	4.7	4.7	4.7	3.9	1.1	-0.3	-3.2	-0.7	0.5
2827	ok	0.23	0.2	1.75e-03	4.7	4.7	4.7	4.7	1.2	3.5	-1.9	3.5	0.8	0.2
2828	ok	0.23	0.2	1.32e-03	4.7	4.7	4.7	4.7	3.2	1.0	-0.5	-3.1	-0.7	0.5
2829	ok	0.23	0.2	1.32e-03	4.7	4.7	4.7	4.7	0.6	3.3	-2.1	3.6	0.7	0.2
2830	ok	0.23	0.2	6.53e-04	4.7	4.7	4.7	4.7	-0.4	6.15e-02	1.4	-3.5	-0.6	-0.3
2831	ok	0.23	0.2	5.23e-04	4.7	4.7	4.7	4.7	0.9	4.4	-2.2	4.1	0.9	2.85e-05
2832	ok	0.23	0.2	7.57e-04	4.7	4.7	4.7	4.7	0.7	2.9	1.6	3.1	0.7	-5.94e-02
2833	ok	0.23	0.1	6.88e-04	4.7	4.7	4.7	4.7	1.0	2.2	0.8	-2.1	-0.5	-0.5
2834	ok	0.23	0.2	1.53e-03	4.7	4.7	4.7	4.7	1.3	2.4	3.5	2.8	0.5	-0.2
2835	ok	0.23	0.1	1.47e-03	4.7	4.7	4.7	4.7	1.4	2.0	2.1	-2.4	-0.5	-0.5
2836	ok	0.23	0.2	1.98e-03	4.7	4.7	4.7	4.7	1.5	2.3	3.5	2.8	0.5	-0.2
2837	ok	0.23	0.1	1.87e-03	4.7	4.7	4.7	4.7	1.6	1.9	2.1	-2.4	-0.5	-0.5
2838	ok	0.23	0.2	2.08e-03	4.7	4.7	4.7	4.7	1.5	2.2	3.3	2.8	0.5	-0.2
2839	ok	0.23	0.2	1.97e-03	4.7	4.7	4.7	4.7	1.5	1.8	2.0	-2.5	-0.5	-0.5
2840	ok	0.23	0.2	1.85e-03	4.7	4.7	4.7	4.7	1.5	1.9	3.7	2.8	0.6	-0.2
2841	ok	0.23	0.2	1.75e-03	4.7	4.7	4.7	4.7	1.5	1.4	2.4	-2.5	-0.5	-0.5
2842	ok	0.23	0.2	2.08e-03	4.7	4.7	4.7	4.7	1.7	1.6	1.4	2.7	0.6	-0.2
2843	ok	0.23	0.2	2.04e-03	4.7	4.7	4.7	4.7	1.5	1.6	1.8	-2.5	-0.5	-0.5
2844	ok	0.23	0.2	1.93e-03	4.7	4.7	4.7	4.7	1.1	1.8	3.0	2.8	0.6	-0.2
2845	ok	0.23	0.2	1.77e-03	4.7	4.7	4.7	4.7	1.0	1.8	1.8	-2.6	-0.5	-0.5
2846	ok	0.23	0.2	1.87e-03	4.7	4.7	4.7	4.7	0.9	2.0	2.9	2.8	0.6	-0.2
2847	ok	0.23	0.2	1.72e-03	4.7	4.7	4.7	4.7	0.8	1.8	1.8	-2.6	-0.5	-0.5
2848	ok	0.23	0.2	1.96e-03	4.7	4.7	4.7	4.7	0.6	2.1	2.5	2.8	0.6	-0.2
2849	ok	0.23	0.2	1.79e-03	4.7	4.7	4.7	4.7	0.6	1.8	1.4	-2.6	-0.6	-0.5
2850	ok	0.23	0.2	1.94e-03	4.7	4.7	4.7	4.7	0.3	2.0	2.5	2.8	0.6	-0.2
2851	ok	0.23	0.2	1.77e-03	4.7	4.7	4.7	4.7	0.2	1.6	1.4	-2.7	-0.6	-0.5
2852	ok	0.23	0.2	1.67e-03	4.7	4.7	4.7	4.7	8.06e-02	1.7	3.1	2.8	0.6	-0.2
2853	ok	0.23	0.2	1.52e-03	4.7	4.7	4.7	4.7	9.54e-02	1.2	2.1	-2.7	-0.5	-0.5
2854	ok	0.23	0.2	1.82e-03	4.7	4.7	4.7	4.7	0.2	1.4	2.1	2.7	0.5	-0.2
2855	ok	0.23	0.2	1.75e-03	4.7	4.7	4.7	4.7	8.49e-02	1.4	1.6	-2.7	-0.6	-0.5
2856	ok	0.23	0.2	1.59e-03	4.7	4.7	4.7	4.7	-0.3	1.7	2.8	2.8	0.6	-0.2
2857	ok	0.23	0.2	1.57e-03	4.7	4.7	4.7	4.7	-1.8	1.6	1.7	-2.7	-0.6	-0.5
2858	ok	0.23	0.2	1.72e-03	4.7	4.7	4.7	4.7	-0.4	2.0	2.9	2.8	0.6	-0.2
2859	ok	0.23	0.2	1.36e-03	4.7	4.7	4.7	4.7	-1.3	2.0	1.7	-2.8	-0.6	-0.5
2860	ok	0.23	0.2	1.62e-03	4.7	4.7	4.7	4.7	-2.7	0.7	2.4	2.8	0.6	-0.1
2861	ok	0.23	0.2	1.92e-03	4.7	4.7	4.7	4.7	1.0	2.0	-2.9	-2.7	-0.6	0.5

2862	ok	0.23	0.1	1.89e-03	4.7	4.7	4.7	4.7	-3.9	2.9	2.3	-2.0	-0.6	-0.1
2863	ok	0.23	0.1	1.66e-03	4.7	4.7	4.7	4.7	-1.5	1.8	3.3	-2.4	-0.6	-0.6
2864	ok	0.23	0.1	2.86e-03	4.7	4.7	4.7	4.7	2.1	2.7	2.7	2.3	0.6	-0.3
2865	ok	0.23	0.2	2.35e-03	4.7	4.7	4.7	4.7	1.8	0.8	2.0	-2.7	-0.7	-0.5
2866	ok	0.23	0.2	2.15e-03	4.7	4.7	4.7	4.7	1.7	1.3	2.4	2.6	0.5	-0.2
2867	ok	0.23	0.2	2.03e-03	4.7	4.7	4.7	4.7	-3.0	1.2	-3.5	-2.7	-0.6	0.5
2868	ok	0.23	0.2	2.09e-03	4.7	4.7	4.7	4.7	1.9	2.1	3.3	2.6	0.5	-0.1
2869	ok	0.23	0.2	2.01e-03	4.7	4.7	4.7	4.7	-2.3	1.4	3.2	-2.7	-0.6	-0.5
2870	ok	0.23	0.2	2.11e-03	4.7	4.7	4.7	4.7	-2.6	2.3	3.1	2.6	0.5	-0.2
2871	ok	0.23	0.2	2.15e-03	4.7	4.7	4.7	4.7	-2.3	1.5	3.3	-2.7	-0.6	-0.5
2872	ok	0.23	0.2	1.99e-03	4.7	4.7	4.7	4.7	-2.6	2.4	2.7	2.5	0.5	-0.1
2873	ok	0.23	0.2	2.05e-03	4.7	4.7	4.7	4.7	-2.4	1.4	3.1	-2.7	-0.6	-0.5
2874	ok	0.23	0.2	2.03e-03	4.7	4.7	4.7	4.7	-2.5	2.3	2.6	2.4	0.5	-0.1
2875	ok	0.23	0.2	2.07e-03	4.7	4.7	4.7	4.7	-2.6	1.4	3.2	-2.7	-0.6	-0.5
2876	ok	0.23	0.2	2.32e-03	4.7	4.7	4.7	4.7	-2.8	0.8	4.0	2.4	0.4	-0.1
2877	ok	0.23	0.2	2.35e-03	4.7	4.7	4.7	4.7	1.8	1.9	-1.6	-2.6	-0.6	0.5
2878	ok	0.23	0.2	2.17e-03	4.7	4.7	4.7	4.7	-2.0	1.2	2.6	2.3	0.5	-0.2
2879	ok	0.23	0.2	1.86e-03	4.7	4.7	4.7	4.7	1.5	1.3	-3.6	-2.6	-0.5	0.5
2880	ok	0.23	0.2	2.13e-03	4.7	4.7	4.7	4.7	1.5	1.7	-2.8	2.8	0.6	0.2
2881	ok	0.23	0.2	2.18e-03	4.7	4.7	4.7	4.7	-2.3	1.1	3.7	-2.6	-0.6	-0.4
2882	ok	0.23	0.2	2.19e-03	4.7	4.7	4.7	4.7	1.7	2.6	-1.9	2.8	0.5	0.2
2883	ok	0.23	0.2	2.11e-03	4.7	4.7	4.7	4.7	-1.9	1.1	4.0	-2.5	-0.6	-0.4
2884	ok	0.23	0.2	2.20e-03	4.7	4.7	4.7	4.7	1.7	2.7	-2.4	2.8	0.5	0.2
2885	ok	0.23	0.1	1.81e-03	4.7	4.7	4.7	4.7	1.3	1.9	-3.4	-2.4	-0.6	0.5
2886	ok	0.23	0.2	1.79e-03	4.7	4.7	4.7	4.7	1.7	2.6	-2.6	2.8	0.5	0.2
2887	ok	0.23	0.2	9.08e-04	4.7	4.7	4.7	4.7	-0.6	1.2	1.7	-2.7	-0.6	-0.3
2888	ok	0.23	0.2	8.12e-04	4.7	4.7	4.7	4.7	1.0	4.0	-1.7	3.1	0.7	7.95e-02
2889	ok	0.23	0.1	9.00e-04	4.7	4.7	4.7	4.7	0.9	3.0	2.0	2.2	0.4	-2.94e-02
2890	ok	0.23	0.1	8.24e-04	4.7	4.7	4.7	4.7	0.8	2.2	2.0	-1.5	-0.4	-0.4
2891	ok	0.23	0.1	1.82e-03	4.7	4.7	4.7	4.7	1.6	2.0	3.5	1.9	0.4	-0.2
2892	ok	0.23	0.1	1.66e-03	4.7	4.7	4.7	4.7	1.2	1.9	3.7	-1.7	-0.4	-0.5
2893	ok	0.23	0.1	2.41e-03	4.7	4.7	4.7	4.7	1.6	1.6	3.5	1.9	0.4	-0.2
2894	ok	0.23	0.1	2.26e-03	4.7	4.7	4.7	4.7	1.3	1.8	3.9	-1.7	-0.4	-0.5
2895	ok	0.23	0.1	2.68e-03	4.7	4.7	4.7	4.7	1.6	1.5	3.5	1.9	0.4	-0.2
2896	ok	0.23	0.1	2.54e-03	4.7	4.7	4.7	4.7	1.2	1.6	3.9	-1.7	-0.4	-0.5
2897	ok	0.23	0.1	2.60e-03	4.7	4.7	4.7	4.7	1.7	1.8	4.5	2.0	0.4	-0.2
2898	ok	0.23	0.1	2.48e-03	4.7	4.7	4.7	4.7	1.1	1.1	4.2	-1.8	-0.4	-0.5
2899	ok	0.23	0.1	2.63e-03	4.7	4.7	4.7	4.7	1.3	1.0	3.7	1.9	0.4	-0.2
2900	ok	0.23	0.1	2.60e-03	4.7	4.7	4.7	4.7	0.4	1.1	4.0	-1.8	-0.4	-0.5
2901	ok	0.23	0.1	2.65e-03	4.7	4.7	4.7	4.7	1.0	1.7	4.0	2.0	0.4	-0.2
2902	ok	0.23	0.1	2.51e-03	4.7	4.7	4.7	4.7	0.3	1.5	4.0	-1.8	-0.4	-0.5
2903	ok	0.23	0.1	2.76e-03	4.7	4.7	4.7	4.7	0.4	1.2	3.6	2.0	0.4	-0.2
2904	ok	0.23	0.1	2.59e-03	4.7	4.7	4.7	4.7	-1.42e-02	1.5	3.9	-1.8	-0.4	-0.5
2905	ok	0.23	0.1	2.90e-03	4.7	4.7	4.7	4.7	5.28e-02	1.1	3.2	2.0	0.4	-0.2
2906	ok	0.23	0.1	2.73e-03	4.7	4.7	4.7	4.7	-0.4	1.4	3.7	-1.9	-0.4	-0.5
2907	ok	0.23	0.1	2.92e-03	4.7	4.7	4.7	4.7	-0.4	1.1	3.1	2.0	0.4	-0.2
2908	ok	0.23	0.1	2.75e-03	4.7	4.7	4.7	4.7	-0.8	1.3	3.6	-1.9	-0.4	-0.5
2909	ok	0.23	0.1	2.67e-03	4.7	4.7	4.7	4.7	-0.4	1.4	4.1	2.0	0.4	-0.2
2910	ok	0.23	0.1	2.52e-03	4.7	4.7	4.7	4.7	-1.1	0.9	4.0	-1.9	-0.4	-0.5
2911	ok	0.23	0.1	2.51e-03	4.7	4.7	4.7	4.7	-1.1	0.7	3.4	1.9	0.4	-0.2
2912	ok	0.23	0.1	2.44e-03	4.7	4.7	4.7	4.7	-3.0	0.7	-4.1	-1.9	-0.4	0.5
2913	ok	0.23	0.1	2.36e-03	4.7	4.7	4.7	4.7	-1.3	1.4	4.0	2.0	0.4	-0.2
2914	ok	0.23	0.1	2.22e-03	4.7	4.7	4.7	4.7	-1.8	1.6	3.9	-1.9	-0.4	-0.5
2915	ok	0.23	0.1	2.39e-03	4.7	4.7	4.7	4.7	-3.1	1.71e-02	4.0	2.0	0.4	-0.2
2916	ok	0.23	0.1	2.71e-03	4.7	4.7	4.7	4.7	-1.5	1.4	-3.9	-1.9	-0.4	0.5
2917	ok	0.23	9.40e-02	2.60e-03	4.7	4.7	4.7	4.7	-1.9	2.3	4.5	1.6	0.2	-0.2
2918	ok	0.23	0.1	2.49e-03	4.7	4.7	4.7	4.7	-3.5	1.5	4.4	-1.7	-0.5	-0.6
2919	ok	0.23	8.92e-02	3.21e-03	4.7	4.7	4.7	4.7	-0.7	2.1	3.4	1.7	0.5	-0.2
2920	ok	0.23	0.1	2.66e-03	4.7	4.7	4.7	4.7	-0.7	1.8	3.5	-1.9	-0.5	-0.4
2921	ok	0.23	0.1	2.41e-03	4.7	4.7	4.7	4.7	-2.5	0.6	3.4	2.0	0.4	-0.2
2922	ok	0.23	0.1	2.25e-03	4.7	4.7	4.7	4.7	-1.7	1.5	-4.3	-2.0	-0.4	0.5
2923	ok	0.23	0.1	2.36e-03	4.7	4.7	4.7	4.7	-1.0	0.7	3.5	1.8	0.4	-0.2
2924	ok	0.23	0.1	2.53e-03	4.7	4.7	4.7	4.7	-0.9	1.3	-4.2	-1.9	-0.4	0.5
2925	ok	0.23	9.90e-02	2.38e-03	4.7	4.7	4.7	4.7	-3.0	2.3	4.3	1.7	0.4	-0.2
2926	ok	0.23	0.1	2.49e-03	4.7	4.7	4.7	4.7	-2.8	1.5	3.8	-1.7	-0.3	-0.5
2927	ok	0.23	9.42e-02	2.51e-03	4.7	4.7	4.7	4.7	-3.4	2.2	4.4	1.6	0.4	-0.2
2928	ok	0.23	0.1	2.43e-03	4.7	4.7	4.7	4.7	0.3	1.9	-3.6	-1.7	-0.3	0.5
2929	ok	0.23	9.59e-02	2.52e-03	4.7	4.7	4.7	4.7	-4.0	1.5	3.5	1.6	0.4	-0.2
2930	ok	0.23	0.1	2.29e-03	4.7	4.7	4.7	4.7	0.9	2.0	-3.8	-1.7	-0.3	0.5
2931	ok	0.23	9.66e-02	2.60e-03	4.7	4.7	4.7	4.7	-4.2	1.6	3.3	1.5	0.4	-0.2
2932	ok	0.23	0.1	2.34e-03	4.7	4.7	4.7	4.7	1.4	1.9	-3.8	-1.6	-0.3	0.5
2933	ok	0.23	9.84e-02	2.88e-03	4.7	4.7	4.7	4.7	-4.4	2.0	4.6	1.6	0.4	-0.1
2934	ok	0.23	0.1	2.60e-03	4.7	4.7	4.7	4.7	-3.5	0.9	4.0	-1.8	-0.4	-0.4
2935	ok	0.23	0.1	2.51e-03	4.7	4.7	4.7	4.7	-2.5	0.6	3.3	1.5	0.3	-0.2
2936	ok	0.23	0.1	2.21e-03	4.7	4.7	4.7	4.7	1.0	1.5	-4.1	-1.8	-0.4	0.5
2937	ok	0.23	0.1	2.51e-03	4.7	4.7	4.7	4.7	0.6	2.6	-5.1	1.8	0.5	0.1
2938	ok	0.23	0.1	2.21e-03	4.7	4.7	4.7	4.7	1.9	2.1	-4.0	-1.6	-0.3	0.5
2939	ok	0.23	9.78e-02	2.46e-03	4.7	4.7	4.7	4.7	-2.7	1.4	3.9	1.4	0.4	-0.1
2940	ok	0.23	0.1	2.06e-03	4.7	4.7	4.7	4.7	2.2	2.3	-3.7	-1.5	-0.3	0.5

2941	ok	0.23	9.80e-02	2.14e-03	4.7	4.7	4.7	4.7	0.9	2.0	-4.1	1.7	0.4	0.1
2942	ok	0.23	0.1	1.70e-03	4.7	4.7	4.7	4.7	2.2	2.5	-3.5	-1.5	-0.3	0.5
2943	ok	0.23	9.71e-02	1.75e-03	4.7	4.7	4.7	4.7	0.9	3.0	-4.7	1.7	0.4	0.1
2944	ok	0.23	0.1	1.14e-03	4.7	4.7	4.7	4.7	-0.8	1.7	1.6	-1.8	-0.3	-0.3
2945	ok	0.23	0.1	1.04e-03	4.7	4.7	4.7	4.7	1.2	2.8	-2.1	2.1	0.4	4.39e-02
2946	ok	0.23	6.58e-02	9.35e-04	4.7	4.7	4.7	4.7	0.3	1.7	1.5	1.2	0.5	-5.46e-02
2947	ok	0.23	6.56e-02	8.49e-04	4.7	4.7	4.7	4.7	1.6	2.0	1.9	-0.8	-0.3	-0.4
2948	ok	0.23	6.23e-02	1.87e-03	4.7	4.7	4.7	4.7	1.9	2.2	3.5	1.0	0.2	-0.2
2949	ok	0.23	7.73e-02	1.74e-03	4.7	4.7	4.7	4.7	2.5	1.1	4.0	-0.9	-0.3	-0.4
2950	ok	0.23	6.42e-02	2.58e-03	4.7	4.7	4.7	4.7	2.3	1.9	4.1	1.0	0.2	-0.2
2951	ok	0.23	8.02e-02	2.52e-03	4.7	4.7	4.7	4.7	2.9	1.1	4.3	-0.9	-0.4	-0.4
2952	ok	0.23	6.49e-02	3.09e-03	4.7	4.7	4.7	4.7	2.5	1.8	4.1	1.0	0.2	-0.2
2953	ok	0.23	8.11e-02	3.02e-03	4.7	4.7	4.7	4.7	2.9	1.0	4.3	-0.9	-0.4	-0.4
2954	ok	0.23	6.56e-02	3.27e-03	4.7	4.7	4.7	4.7	2.5	1.8	4.5	1.0	0.2	-0.2
2955	ok	0.23	8.33e-02	3.18e-03	4.7	4.7	4.7	4.7	2.2	0.8	4.6	-0.9	-0.4	-0.4
2956	ok	0.23	6.30e-02	3.47e-03	4.7	4.7	4.7	4.7	2.4	1.4	4.1	1.0	0.2	-0.2
2957	ok	0.23	8.17e-02	3.41e-03	4.7	4.7	4.7	4.7	2.3	0.8	4.5	-1.0	-0.4	-0.4
2958	ok	0.23	6.27e-02	3.57e-03	4.7	4.7	4.7	4.7	1.9	1.7	4.3	1.0	0.2	-0.2
2959	ok	0.23	8.21e-02	3.42e-03	4.7	4.7	4.7	4.7	1.8	0.8	4.9	-1.0	-0.4	-0.4
2960	ok	0.23	6.12e-02	3.67e-03	4.7	4.7	4.7	4.7	1.4	1.5	4.3	1.0	0.2	-0.2
2961	ok	0.23	8.15e-02	3.51e-03	4.7	4.7	4.7	4.7	1.3	0.8	4.8	-1.0	-0.4	-0.4
2962	ok	0.23	5.95e-02	3.80e-03	4.7	4.7	4.7	4.7	0.8	1.4	4.1	1.0	0.2	-0.2
2963	ok	0.23	7.95e-02	3.61e-03	4.7	4.7	4.7	4.7	0.1	0.8	4.4	-1.0	-0.4	-0.4
2964	ok	0.23	5.70e-02	3.81e-03	4.7	4.7	4.7	4.7	0.1	1.3	4.0	1.0	0.2	-0.2
2965	ok	0.23	7.79e-02	3.60e-03	4.7	4.7	4.7	4.7	-0.5	0.7	4.2	-1.0	-0.4	-0.4
2966	ok	0.23	5.49e-02	3.63e-03	4.7	4.7	4.7	4.7	-0.6	1.3	4.4	1.0	0.2	-0.2
2967	ok	0.23	7.82e-02	3.36e-03	4.7	4.7	4.7	4.7	-6.0	0.6	-4.5	-1.0	-0.4	0.4
2968	ok	0.23	5.01e-02	3.38e-03	4.7	4.7	4.7	4.7	-1.4	0.9	4.0	1.0	0.2	-0.2
2969	ok	0.23	7.50e-02	3.19e-03	4.7	4.7	4.7	4.7	-2.2	0.6	4.6	-1.0	-0.4	-0.4
2970	ok	0.23	4.81e-02	3.11e-03	4.7	4.7	4.7	4.7	-2.5	1.1	4.4	1.0	0.2	-0.2
2971	ok	0.23	7.06e-02	2.71e-03	4.7	4.7	4.7	4.7	-4.0	0.9	-4.4	-1.0	-0.4	0.4
2972	ok	0.23	4.41e-02	3.00e-03	4.7	4.7	4.7	4.7	-3.6	1.5	5.0	0.8	-7.88e-02	-0.3
2973	ok	0.23	7.45e-02	2.72e-03	4.7	4.7	4.7	4.7	-2.9	0.8	5.2	-0.9	-0.4	-0.5
2974	ok	0.23	4.75e-02	3.37e-03	4.7	4.7	4.7	4.7	-3.1	1.5	4.1	0.9	0.3	-0.2
2975	ok	0.23	7.52e-02	2.95e-03	4.7	4.7	4.7	4.7	-2.5	1.9	4.9	-1.0	-0.4	-0.4
2976	ok	0.23	4.85e-02	2.89e-03	4.7	4.7	4.7	4.7	-4.6	0.5	3.8	1.0	0.2	-0.2
2977	ok	0.23	7.91e-02	3.17e-03	4.7	4.7	4.7	4.7	-2.4	1.4	-4.9	-1.1	-0.4	0.5
2978	ok	0.23	5.05e-02	3.36e-03	4.7	4.7	4.7	4.7	-3.9	0.8	4.2	1.0	0.2	-0.2
2979	ok	0.23	7.49e-02	2.83e-03	4.7	4.7	4.7	4.7	-4.6	0.7	4.2	-1.0	-0.4	-0.4
2980	ok	0.23	4.80e-02	3.02e-03	4.7	4.7	4.7	4.7	-4.4	0.6	3.6	0.8	0.1	-0.2
2981	ok	0.23	7.64e-02	2.88e-03	4.7	4.7	4.7	4.7	-1.2	1.4	-4.1	-1.0	-0.3	0.5
2982	ok	0.23	4.69e-02	3.38e-03	4.7	4.7	4.7	4.7	-5.8	1.3	3.1	0.7	5.24e-02	-0.3
2983	ok	0.23	6.72e-02	3.19e-03	4.7	4.7	4.7	4.7	-5.3	1.4	4.1	-0.8	-0.3	-0.4
2984	ok	0.23	4.75e-02	3.67e-03	4.7	4.7	4.7	4.7	-6.3	1.5	3.0	0.7	5.27e-02	-0.3
2985	ok	0.23	6.99e-02	3.29e-03	4.7	4.7	4.7	4.7	0.4	1.4	-3.7	-0.8	-0.3	0.4
2986	ok	0.23	5.08e-02	3.71e-03	4.7	4.7	4.7	4.7	-6.5	1.5	2.7	0.6	5.37e-02	-0.3
2987	ok	0.23	7.26e-02	3.39e-03	4.7	4.7	4.7	4.7	1.8	1.5	-4.0	-0.8	-0.3	0.4
2988	ok	0.23	5.24e-02	3.64e-03	4.7	4.7	4.7	4.7	-6.6	1.5	2.7	0.6	5.07e-02	-0.3
2989	ok	0.23	7.34e-02	3.44e-03	4.7	4.7	4.7	4.7	2.4	1.5	-4.2	-0.8	-0.3	0.4
2990	ok	0.23	5.37e-02	3.61e-03	4.7	4.7	4.7	4.7	-6.7	1.4	3.1	0.7	6.25e-02	-0.3
2991	ok	0.23	7.49e-02	3.57e-03	4.7	4.7	4.7	4.7	-5.5	0.4	3.7	-1.0	-0.3	-0.4
2992	ok	0.23	6.01e-02	3.38e-03	4.7	4.7	4.7	4.7	-5.1	0.5	3.0	0.7	0.1	-0.2
2993	ok	0.23	8.25e-02	3.02e-03	4.7	4.7	4.7	4.7	2.1	0.9	-3.9	-0.9	-0.4	0.4
2994	ok	0.23	5.83e-02	3.20e-03	4.7	4.7	4.7	4.7	1.9	3.4	-3.6	1.0	0.3	0.3
2995	ok	0.23	7.08e-02	2.84e-03	4.7	4.7	4.7	4.7	3.2	1.7	-3.4	-0.7	-0.3	0.4
2996	ok	0.23	5.54e-02	2.99e-03	4.7	4.7	4.7	4.7	-5.0	-5.07e-02	2.2	0.5	-5.71e-02	-0.2
2997	ok	0.23	7.14e-02	2.44e-03	4.7	4.7	4.7	4.7	3.5	1.8	-3.3	-0.7	-0.3	0.4
2998	ok	0.23	5.55e-02	2.40e-03	4.7	4.7	4.7	4.7	2.1	3.8	-2.6	0.9	0.3	0.2
2999	ok	0.23	6.88e-02	1.79e-03	4.7	4.7	4.7	4.7	3.3	1.9	-2.9	-0.7	-0.3	0.3
3000	ok	0.23	5.33e-02	1.84e-03	4.7	4.7	4.7	4.7	1.9	4.4	-2.9	0.9	0.3	0.2
3001	ok	0.23	5.89e-02	9.90e-04	4.7	4.7	4.7	4.7	-0.1	1.1	1.6	-1.0	-0.4	-0.2
3002	ok	0.23	6.30e-02	9.35e-04	4.7	4.7	4.7	4.7	0.8	1.7	-0.9	1.1	0.5	3.77e-02
3003	ok	0.23	2.62e-02	9.29e-04	4.7	4.7	4.7	4.7	1.1	1.3	0.6	-9.55e-06	0.1	-0.1
3004	ok	0.23	3.69e-02	9.20e-04	4.7	4.7	4.7	4.7	1.9	-0.4	2.4	0.3	0.3	-0.4
3005	ok	0.23	2.72e-02	1.79e-03	4.7	4.7	4.7	4.7	-1.7	8.30e-02	-3.4	0.3	5.73e-02	0.1
3006	ok	0.23	4.40e-02	1.95e-03	4.7	4.7	4.7	4.7	3.4	0.5	4.4	0.2	0.2	-0.4
3007	ok	0.23	3.21e-02	2.87e-03	4.7	4.7	4.7	4.7	-4.6	-0.2	-4.1	0.3	6.72e-02	0.1
3008	ok	0.23	4.82e-02	3.11e-03	4.7	4.7	4.7	4.7	4.1	0.6	4.7	0.2	0.1	-0.4
3009	ok	0.23	2.77e-02	3.77e-03	4.7	4.7	4.7	4.7	-7.0	-0.4	-4.4	-2.26e-02	6.20e-02	0.1
3010	ok	0.23	4.37e-02	3.95e-03	4.7	4.7	4.7	4.7	4.2	0.7	4.7	0.2	0.1	-0.4
3011	ok	0.23	3.81e-02	4.40e-03	4.7	4.7	4.7	4.7	4.1	1.5	5.1	9.71e-02	-1.14e-02	-0.1
3012	ok	0.23	4.68e-02	4.40e-03	4.7	4.7	4.7	4.7	-9.2	-0.6	-3.8	-0.2	0.2	0.4
3013	ok	0.23	3.98e-02	4.65e-03	4.7	4.7	4.7	4.7	4.0	1.6	5.0	-0.2	-5.73e-03	-0.1
3014	ok	0.23	4.61e-02	4.67e-03	4.7	4.7	4.7	4.7	3.5	0.6	4.8	-0.1	0.1	-0.4
3015	ok	0.23	3.74e-02	4.86e-03	4.7	4.7	4.7	4.7	3.5	1.4	5.2	-0.2	-1.51e-02	-0.1
3016	ok	0.23	4.69e-02	4.76e-03	4.7	4.7	4.7	4.7	2.9	0.6	5.1	-0.1	0.1	-0.5
3017	ok	0.23	3.77e-02	4.88e-03	4.7	4.7	4.7	4.7	3.2	1.4	5.3	-0.2	-1.98e-02	-0.1
3018	ok	0.23	4.60e-02	4.84e-03	4.7	4.7	4.7	4.7	2.3	0.6	4.9	-0.1	0.1	-0.5
3019	ok	0.23	3.62e-02	4.88e-03	4.7	4.7	4.7	4.7	2.6	1.3	5.2	-0.2	-2.30e-02	-0.1

3020	ok	0.23	4.33e-02	4.90e-03	4.7	4.7	4.7	4.7	0.5	0.5	4.6	-0.2	0.1	-0.5
3021	ok	0.23	3.34e-02	4.85e-03	4.7	4.7	4.7	4.7	0.6	1.1	4.9	-0.2	-2.38e-02	-0.1
3022	ok	0.23	4.15e-02	4.88e-03	4.7	4.7	4.7	4.7	-10.1	-0.4	-4.6	-0.2	0.1	0.4
3023	ok	0.23	3.15e-02	4.71e-03	4.7	4.7	4.7	4.7	-0.5	0.9	4.8	-0.2	-2.18e-02	-0.1
3024	ok	0.23	3.93e-02	4.64e-03	4.7	4.7	4.7	4.7	-9.5	-0.4	-4.4	-0.2	0.1	0.4
3025	ok	0.23	2.89e-02	4.32e-03	4.7	4.7	4.7	4.7	-1.5	0.8	4.8	-0.2	-1.29e-02	-0.1
3026	ok	0.23	3.67e-02	4.32e-03	4.7	4.7	4.7	4.7	-3.1	0.2	4.7	-0.2	0.1	-0.5
3027	ok	0.23	2.55e-02	4.02e-03	4.7	4.7	4.7	4.7	-3.0	0.6	5.0	-0.2	-1.99e-02	-0.2
3028	ok	0.23	3.38e-02	4.07e-03	4.7	4.7	4.7	4.7	-7.2	-0.2	-4.7	-0.2	0.1	0.4
3029	ok	0.23	3.53e-02	3.57e-03	4.7	4.7	4.7	4.7	-2.7	0.8	5.6	-0.3	-3.13e-02	-0.2
3030	ok	0.23	3.40e-02	3.47e-03	4.7	4.7	4.7	4.7	-4.7	3.39e-02	5.5	-0.2	0.1	-0.4
3031	ok	0.23	2.94e-02	3.25e-03	4.7	4.7	4.7	4.7	-4.0	1.1	-6.0	-0.2	-1.57e-02	0.2
3032	ok	0.23	3.55e-02	3.62e-03	4.7	4.7	4.7	4.7	-4.8	0.3	-5.2	-0.2	0.1	0.4
3033	ok	0.23	2.52e-02	3.62e-03	4.7	4.7	4.7	4.7	-3.7	0.8	-5.2	-0.2	-2.30e-02	0.1
3034	ok	0.23	3.72e-02	3.78e-03	4.7	4.7	4.7	4.7	-4.2	0.2	-5.0	-0.2	8.47e-02	0.5
3035	ok	0.23	2.77e-02	3.90e-03	4.7	4.7	4.7	4.7	-2.7	0.7	-5.3	-0.2	-2.96e-02	0.2
3036	ok	0.23	3.83e-02	4.10e-03	4.7	4.7	4.7	4.7	-3.0	0.3	-5.1	-0.2	0.1	0.5
3037	ok	0.23	2.93e-02	4.19e-03	4.7	4.7	4.7	4.7	-1.7	0.9	-4.7	-0.2	-1.55e-02	0.1
3038	ok	0.23	3.77e-02	4.60e-03	4.7	4.7	4.7	4.7	-9.5	-0.3	4.3	-0.2	7.80e-02	-0.4
3039	ok	0.23	3.62e-02	4.69e-03	4.7	4.7	4.7	4.7	-0.6	0.5	-4.7	-0.2	-5.04e-02	0.2
3040	ok	0.23	3.78e-02	4.78e-03	4.7	4.7	4.7	4.7	-10.1	-0.5	4.2	-0.2	4.11e-02	-0.4
3041	ok	0.23	3.73e-02	4.76e-03	4.7	4.7	4.7	4.7	0.6	0.7	-4.7	-0.2	-5.30e-02	0.2
3042	ok	0.23	4.06e-02	4.84e-03	4.7	4.7	4.7	4.7	-10.5	-0.5	3.9	-0.2	4.21e-02	-0.4
3043	ok	0.23	3.93e-02	4.79e-03	4.7	4.7	4.7	4.7	1.7	0.8	-4.9	-0.2	-5.27e-02	0.2
3044	ok	0.23	4.24e-02	4.83e-03	4.7	4.7	4.7	4.7	-10.7	-0.6	3.6	-0.2	4.62e-02	-0.4
3045	ok	0.23	4.02e-02	4.83e-03	4.7	4.7	4.7	4.7	2.3	0.8	-5.0	-0.2	-4.88e-02	0.2
3046	ok	0.23	4.32e-02	4.79e-03	4.7	4.7	4.7	4.7	-10.7	-0.6	3.4	-0.2	5.09e-02	-0.4
3047	ok	0.23	3.91e-02	4.81e-03	4.7	4.7	4.7	4.7	2.7	0.7	-5.0	-0.2	-4.19e-02	0.2
3048	ok	0.23	4.37e-02	4.59e-03	4.7	4.7	4.7	4.7	-10.2	-0.7	3.3	-0.1	0.2	-0.4
3049	ok	0.23	3.78e-02	4.56e-03	4.7	4.7	4.7	4.7	3.2	1.6	-4.5	-0.2	-2.62e-03	0.1
3050	ok	0.23	4.37e-02	4.39e-03	4.7	4.7	4.7	4.7	-9.5	-0.5	3.5	-0.1	0.1	-0.4
3051	ok	0.23	4.21e-02	4.43e-03	4.7	4.7	4.7	4.7	4.1	1.1	-4.7	-0.2	-3.85e-02	0.2
3052	ok	0.23	4.10e-02	3.76e-03	4.7	4.7	4.7	4.7	-7.9	-0.6	3.3	-0.1	8.79e-02	-0.4
3053	ok	0.23	4.11e-02	3.71e-03	4.7	4.7	4.7	4.7	4.1	1.2	-4.7	-0.2	-3.66e-02	0.2
3054	ok	0.23	3.92e-02	2.83e-03	4.7	4.7	4.7	4.7	-5.6	-0.4	2.9	-8.17e-02	9.59e-02	-0.3
3055	ok	0.23	3.17e-02	2.85e-03	4.7	4.7	4.7	4.7	3.3	-0.3	-4.4	-2.77e-02	-3.64e-02	0.2
3056	ok	0.23	3.77e-02	1.69e-03	4.7	4.7	4.7	4.7	3.1	0.5	-3.6	0.2	8.68e-02	0.4
3057	ok	0.23	2.87e-02	1.86e-03	4.7	4.7	4.7	4.7	-1.7	1.5	3.3	0.2	4.20e-02	-0.2
3058	ok	0.23	3.41e-02	8.72e-04	4.7	4.7	4.7	4.7	1.6	-0.4	-2.1	0.2	0.2	0.4
3059	ok	0.23	2.57e-02	7.63e-04	4.7	4.7	4.7	4.7	1.2	1.3	1.85e-03	2.46e-02	0.2	0.1

Nodo	**x/d**	**V N/M**	**ver. rid**	**Af pr-**	**Af pr+**	**Af sec-**	**Af sec+**	**N x**	**N y**	**N xy**	**M x**	**M y**	**M xy**
								-10.67	-1.84	-6.01	-4.84	-0.84	-0.66
	0.23	0.30	4.90e-03	4.67	4.67	4.67	4.67	6.91	4.41	5.65	5.35	0.99	0.59

Nodo	**Stato**	**Max tau** daN/cm2	**Ver V pr**	**Ver V sec**	**Af V pr**	**Af V sec**	**V pr** kN/ m	**V sec** kN/ m
2718	ok	2.10						
2719	ok	2.07						
2720	ok	1.95						
2721	ok	1.93						
2722	ok	1.96						
2723	ok	1.94						
2724	ok	1.98						
2725	ok	1.96						
2726	ok	2.00						
2727	ok	1.99						
2728	ok	2.10						
2729	ok	2.05						
2730	ok	2.04						
2731	ok	2.02						
2732	ok	2.05						
2733	ok	2.02						
2734	ok	2.06						
2735	ok	2.03						
2736	ok	2.07						
2737	ok	2.04						
2738	ok	2.08						
2739	ok	2.05						
2740	ok	2.17						
2741	ok	2.11						
2742	ok	2.09						
2743	ok	2.05						
2744	ok	2.06						
2745	ok	2.03						
2746	ok	2.12						
2747	ok	2.09						

2748	ok	1.99
2749	ok	2.26
2750	ok	2.20
2751	ok	2.20
2752	ok	2.10
2753	ok	2.06
2754	ok	2.08
2755	ok	2.02
2756	ok	2.05
2757	ok	2.01
2758	ok	2.04
2759	ok	2.00
2760	ok	2.03
2761	ok	2.00
2762	ok	2.02
2763	ok	2.03
2764	ok	2.08
2765	ok	1.98
2766	ok	2.00
2767	ok	1.94
2768	ok	1.96
2769	ok	1.92
2770	ok	1.94
2771	ok	1.91
2772	ok	1.93
2773	ok	2.04
2774	ok	2.07
2775	ok	1.34
2776	ok	1.34
2777	ok	1.32
2778	ok	1.38
2779	ok	1.33
2780	ok	1.39
2781	ok	1.35
2782	ok	1.40
2783	ok	1.35
2784	ok	1.41
2785	ok	1.25
2786	ok	1.30
2787	ok	1.39
2788	ok	1.44
2789	ok	1.39
2790	ok	1.44
2791	ok	1.40
2792	ok	1.44
2793	ok	1.40
2794	ok	1.45
2795	ok	1.40
2796	ok	1.44
2797	ok	1.29
2798	ok	1.39
2799	ok	1.41
2800	ok	1.45
2801	ok	1.43
2802	ok	1.47
2803	ok	1.37
2804	ok	1.58
2805	ok	1.51
2806	ok	1.48
2807	ok	1.35
2808	ok	1.28
2809	ok	1.28
2810	ok	1.41
2811	ok	1.36
2812	ok	1.44
2813	ok	1.39
2814	ok	1.44
2815	ok	1.39
2816	ok	1.43
2817	ok	1.38
2818	ok	1.43
2819	ok	1.38
2820	ok	1.31
2821	ok	1.27
2822	ok	1.37
2823	ok	1.31
2824	ok	1.39
2825	ok	1.34
2826	ok	1.38

2827	ok	1.32
2828	ok	1.37
2829	ok	1.31
2830	ok	1.35
2831	ok	1.35
2832	ok	1.13
2833	ok	1.10
2834	ok	1.07
2835	ok	1.09
2836	ok	1.08
2837	ok	1.10
2838	ok	1.09
2839	ok	1.11
2840	ok	1.06
2841	ok	1.08
2842	ok	1.08
2843	ok	1.10
2844	ok	1.12
2845	ok	1.14
2846	ok	1.12
2847	ok	1.14
2848	ok	1.12
2849	ok	1.14
2850	ok	1.13
2851	ok	1.14
2852	ok	1.09
2853	ok	1.11
2854	ok	1.11
2855	ok	1.13
2856	ok	1.14
2857	ok	1.16
2858	ok	1.10
2859	ok	1.21
2860	ok	1.18
2861	ok	1.19
2862	ok	1.13
2863	ok	0.98
2864	ok	1.11
2865	ok	1.08
2866	ok	1.07
2867	ok	1.15
2868	ok	1.16
2869	ok	1.16
2870	ok	1.17
2871	ok	1.16
2872	ok	1.17
2873	ok	1.15
2874	ok	1.16
2875	ok	1.15
2876	ok	1.15
2877	ok	1.08
2878	ok	1.05
2879	ok	1.11
2880	ok	1.12
2881	ok	1.11
2882	ok	1.13
2883	ok	1.11
2884	ok	1.13
2885	ok	1.10
2886	ok	1.12
2887	ok	1.09
2888	ok	1.11
2889	ok	0.83
2890	ok	0.79
2891	ok	0.76
2892	ok	0.78
2893	ok	0.76
2894	ok	0.78
2895	ok	0.76
2896	ok	0.78
2897	ok	0.76
2898	ok	0.78
2899	ok	0.73
2900	ok	0.75
2901	ok	0.77
2902	ok	0.79
2903	ok	0.78
2904	ok	0.80
2905	ok	0.78

2906	ok	0.80
2907	ok	0.78
2908	ok	0.80
2909	ok	0.77
2910	ok	0.79
2911	ok	0.74
2912	ok	0.76
2913	ok	0.77
2914	ok	0.82
2915	ok	0.80
2916	ok	0.82
2917	ok	0.79
2918	ok	0.71
2919	ok	0.80
2920	ok	0.88
2921	ok	0.85
2922	ok	0.88
2923	ok	0.68
2924	ok	0.75
2925	ok	0.79
2926	ok	0.73
2927	ok	0.77
2928	ok	0.74
2929	ok	0.78
2930	ok	0.74
2931	ok	0.77
2932	ok	0.73
2933	ok	0.76
2934	ok	0.72
2935	ok	0.70
2936	ok	0.74
2937	ok	0.77
2938	ok	0.72
2939	ok	0.75
2940	ok	0.72
2941	ok	0.74
2942	ok	0.70
2943	ok	0.73
2944	ok	0.75
2945	ok	0.80
2946	ok	0.53
2947	ok	0.58
2948	ok	0.46
2949	ok	0.58
2950	ok	0.47
2951	ok	0.59
2952	ok	0.47
2953	ok	0.59
2954	ok	0.46
2955	ok	0.59
2956	ok	0.46
2957	ok	0.58
2958	ok	0.48
2959	ok	0.59
2960	ok	0.48
2961	ok	0.59
2962	ok	0.48
2963	ok	0.59
2964	ok	0.48
2965	ok	0.59
2966	ok	0.47
2967	ok	0.59
2968	ok	0.47
2969	ok	0.57
2970	ok	0.49
2971	ok	0.58
2972	ok	0.51
2973	ok	0.52
2974	ok	0.47
2975	ok	0.61
2976	ok	0.59
2977	ok	0.66
2978	ok	0.42
2979	ok	0.61
2980	ok	0.50
2981	ok	0.59
2982	ok	0.54
2983	ok	0.55
2984	ok	0.54

2985	ok	0.55
2986	ok	0.55
2987	ok	0.55
2988	ok	0.54
2989	ok	0.55
2990	ok	0.53
2991	ok	0.55
2992	ok	0.43
2993	ok	0.60
2994	ok	0.54
2995	ok	0.55
2996	ok	0.54
2997	ok	0.56
2998	ok	0.55
2999	ok	0.56
3000	ok	0.54
3001	ok	0.53
3002	ok	0.51
3003	ok	0.43
3004	ok	0.42
3005	ok	0.36
3006	ok	0.38
3007	ok	0.39
3008	ok	0.37
3009	ok	0.39
3010	ok	0.36
3011	ok	0.38
3012	ok	0.37
3013	ok	0.39
3014	ok	0.35
3015	ok	0.37
3016	ok	0.36
3017	ok	0.36
3018	ok	0.36
3019	ok	0.35
3020	ok	0.36
3021	ok	0.35
3022	ok	0.36
3023	ok	0.35
3024	ok	0.36
3025	ok	0.36
3026	ok	0.35
3027	ok	0.36
3028	ok	0.39
3029	ok	0.65
3030	ok	0.42
3031	ok	0.33
3032	ok	0.42
3033	ok	0.40
3034	ok	0.38
3035	ok	0.35
3036	ok	0.34
3037	ok	0.40
3038	ok	0.35
3039	ok	0.32
3040	ok	0.34
3041	ok	0.31
3042	ok	0.35
3043	ok	0.31
3044	ok	0.34
3045	ok	0.31
3046	ok	0.35
3047	ok	0.32
3048	ok	0.37
3049	ok	0.41
3050	ok	0.34
3051	ok	0.35
3052	ok	0.34
3053	ok	0.35
3054	ok	0.35
3055	ok	0.36
3056	ok	0.38
3057	ok	0.35
3058	ok	0.44
3059	ok	0.48

Nodo	**Max tau**	**Ver V pr**	**Ver V sec**	**Af V pr**	**Af V sec**	**V pr**	**V sec**
	2.26						

Macro Guscio	Spessore	Id Materiale	Id Criterio	Progettazione
	cm			
35	15.00	1	3	Singolo elemento

Nodo	Stato	x/d	V N/M	ver. rid	Af pr-	Af pr+	Af sec-	Af sec+	N x	N y	N xy	M x	M y	M xy
									kN/ m	kN/ m	kN/ m	kN	kN	kN
3488	ok	0.25	0.3	4.29e-03	5.7	5.7	5.7	5.7	20.6	3.9	3.4	5.8	0.6	0.1
3489	ok	0.25	0.2	5.40e-03	5.7	5.7	5.7	5.7	18.1	0.5	1.6	4.3	0.9	-0.5
3490	ok	0.25	0.2	4.62e-03	5.7	5.7	5.7	5.7	5.3	1.4	1.6	3.6	0.7	-0.3
3491	ok	0.25	0.2	2.10e-03	5.7	5.7	5.7	5.7	4.3	8.76e-02	-0.4	-3.2	-0.4	-0.2
3492	ok	0.25	0.2	3.32e-03	5.7	5.7	5.7	5.7	-8.3	-0.4	0.3	3.6	0.7	-0.3
3493	ok	0.25	0.2	4.32e-03	5.7	5.7	5.7	5.7	2.5	-0.1	-1.8	-3.3	-0.4	-0.2
3494	ok	0.25	0.1	5.00e-03	5.7	5.7	5.7	5.7	-12.6	-0.8	-1.41e-02	3.6	0.7	-0.3
3495	ok	0.25	0.2	5.79e-03	5.7	5.7	5.7	5.7	5.0	-0.2	-1.8	-3.2	-0.4	-0.3
3496	ok	0.25	0.2	7.18e-03	5.7	5.7	5.7	5.7	-18.0	-1.8	1.2	4.1	0.7	-0.5
3497	ok	0.25	0.2	8.13e-03	5.7	5.7	5.7	5.7	-19.5	-3.4	1.4	-4.7	-0.6	-0.4
3498	ok	0.25	0.2	9.01e-03	5.7	5.7	5.7	5.7	4.2	3.8	1.0	4.9	0.9	9.50e-02
3499	ok	0.25	0.2	2.77e-03	5.7	5.7	5.7	5.7	6.5	0.4	1.2	4.0	0.9	-0.4
3500	ok	0.25	0.2	3.26e-03	5.7	5.7	5.7	5.7	-8.0	-0.7	5.60e-02	3.7	0.7	-0.4
3501	ok	0.25	0.2	4.46e-03	5.7	5.7	5.7	5.7	2.7	0.1	-2.4	-3.4	-0.5	-0.2
3502	ok	0.25	0.1	4.40e-03	5.7	5.7	5.7	5.7	-10.6	-0.9	-1.3	3.7	0.7	-0.3
3503	ok	0.25	0.2	5.72e-03	5.7	5.7	5.7	5.7	1.6	0.1	-2.8	-3.4	-0.5	-0.3
3504	ok	0.25	0.2	4.71e-03	5.7	5.7	5.7	5.7	-11.3	-0.7	-1.3	3.7	0.7	-0.4
3505	ok	0.25	0.2	6.01e-03	5.7	5.7	5.7	5.7	1.5	0.1	-3.0	-3.5	-0.5	-0.3
3506	ok	0.25	0.2	4.75e-03	5.7	5.7	5.7	5.7	-11.7	-0.8	-7.25e-02	3.6	0.7	-0.4
3507	ok	0.25	0.2	5.78e-03	5.7	5.7	5.7	5.7	2.9	0.1	-2.6	-3.4	-0.5	-0.3
3508	ok	0.25	0.2	6.03e-03	5.7	5.7	5.7	5.7	-15.1	-1.6	0.5	4.1	0.8	-0.5
3509	ok	0.25	0.2	7.09e-03	5.7	5.7	5.7	5.7	-15.0	-3.0	0.7	-4.9	-0.6	-0.4
3510	ok	0.25	0.2	7.11e-03	5.7	5.7	5.7	5.7	5.9	4.1	1.2	4.9	0.9	6.78e-02
3511	ok	0.25	0.2	3.99e-03	5.7	5.7	5.7	5.7	-7.2	-2.6	-1.9	-4.9	-0.6	0.3
3512	ok	0.25	0.2	2.77e-03	5.7	5.7	5.7	5.7	-6.9	-0.7	-0.6	3.8	0.7	0.5
3513	ok	0.25	0.2	3.32e-03	5.7	5.7	5.7	5.7	5.0	0.6	-2.7	-3.5	-0.5	-0.2
3514	ok	0.25	0.2	1.84e-03	5.7	5.7	5.7	5.7	-3.6	-0.3	-1.7	3.6	0.7	-0.4
3515	ok	0.23	0.2	3.73e-03	4.7	4.7	4.7	4.7	3.7	0.5	-3.1	-3.5	-0.5	-0.3
3516	ok	0.23	0.2	1.89e-03	4.7	4.7	4.7	4.7	-3.7	-6.73e-02	-1.4	3.5	0.7	-0.4
3517	ok	0.23	0.2	3.76e-03	4.7	4.7	4.7	4.7	3.7	0.5	-3.1	-3.5	-0.5	-0.3
3518	ok	0.23	0.2	1.85e-03	4.7	4.7	4.7	4.7	-3.6	-0.2	1.6	3.5	0.7	0.4
3519	ok	0.23	0.2	3.45e-03	4.7	4.7	4.7	4.7	3.8	0.5	-2.6	-3.4	-0.5	-0.3
3520	ok	0.23	0.2	3.26e-03	4.7	4.7	4.7	4.7	-8.0	-0.8	0.3	3.9	0.7	-0.5
3521	ok	0.23	0.3	4.21e-03	4.7	4.7	4.7	4.7	-7.6	-2.5	1.9	-4.9	-0.6	-0.3
3522	ok	0.23	0.3	7.09e-03	4.7	4.7	4.7	4.7	13.1	5.0	-0.1	4.6	0.9	5.05e-02
3523	ok	0.23	0.3	7.11e-03	4.7	4.7	4.7	4.7	-14.5	-3.0	-0.6	-4.9	-0.6	0.4
3524	ok	0.23	0.2	5.93e-03	4.7	4.7	4.7	4.7	-14.5	-1.5	-0.5	4.0	0.7	0.5
3525	ok	0.23	0.2	5.81e-03	4.7	4.7	4.7	4.7	12.5	0.9	-2.0	-3.5	-0.5	-0.2
3526	ok	0.23	0.2	4.66e-03	4.7	4.7	4.7	4.7	-11.3	-0.8	0.6	3.6	0.7	0.4
3527	ok	0.23	0.2	6.08e-03	4.7	4.7	4.7	4.7	11.2	0.9	-2.8	-3.5	-0.5	-0.2
3528	ok	0.23	0.2	4.62e-03	4.7	4.7	4.7	4.7	-10.9	-0.7	1.2	3.6	0.7	0.4
3529	ok	0.23	0.2	5.81e-03	4.7	4.7	4.7	4.7	10.9	0.9	-2.7	-3.5	-0.5	-0.2
3530	ok	0.23	0.2	4.32e-03	4.7	4.7	4.7	4.7	-10.3	-0.9	1.2	3.6	0.7	0.4
3531	ok	0.23	0.2	4.54e-03	4.7	4.7	4.7	4.7	10.1	0.7	-1.2	-3.3	-0.5	-0.2
3532	ok	0.23	0.2	3.20e-03	4.7	4.7	4.7	4.7	-1.7	5.49e-02	1.0	3.6	0.7	-0.5
3533	ok	0.23	0.2	2.67e-03	4.7	4.7	4.7	4.7	-4.3	-2.4	1.5	-4.8	-0.6	-0.3
3534	ok	0.23	0.3	9.07e-03	4.7	4.7	4.7	4.7	4.1	3.7	-0.9	4.9	0.9	-8.89e-02
3535	ok	0.23	0.3	8.28e-03	4.7	4.7	4.7	4.7	-19.1	-3.4	-1.3	-4.7	-0.6	0.4
3536	ok	0.23	0.2	7.21e-03	4.7	4.7	4.7	4.7	-17.4	-1.7	-1.3	4.1	0.7	0.5
3537	ok	0.23	0.2	5.91e-03	4.7	4.7	4.7	4.7	13.8	0.9	-1.2	-3.3	-0.5	-0.2
3538	ok	0.23	0.2	5.01e-03	4.7	4.7	4.7	4.7	-12.2	-0.8	-7.34e-02	3.5	0.7	0.3
3539	ok	0.23	0.2	4.45e-03	4.7	4.7	4.7	4.7	8.9	0.6	-1.1	-3.3	-0.5	-0.2
3540	ok	0.23	0.2	3.32e-03	4.7	4.7	4.7	4.7	-8.1	-0.4	-0.4	3.6	0.7	0.3
3541	ok	0.23	0.2	2.19e-03	4.7	4.7	4.7	4.7	4.1	8.82e-02	0.3	-3.2	-0.4	0.2
3542	ok	0.23	0.2	4.72e-03	4.7	4.7	4.7	4.7	3.9	1.0	-1.1	3.5	0.7	0.3
3543	ok	0.23	0.3	5.54e-03	4.7	4.7	4.7	4.7	-11.5	-3.0	2.2	-5.0	-0.7	-0.3
3544	ok	0.23	0.4	4.40e-03	4.7	4.7	4.7	4.7	20.3	3.9	-3.3	5.7	0.6	-0.1
3545	ok	0.25	0.2	4.63e-03	5.7	5.7	5.7	5.7	4.4	-2.1	3.8	4.3	1.0	0.1
3546	ok	0.25	0.2	2.52e-03	5.7	5.7	5.7	5.7	3.3	-0.2	2.89e-02	-2.7	-0.7	-0.5
3547	ok	0.25	0.2	2.21e-03	5.7	5.7	5.7	5.7	4.2	3.9	0.4	3.5	0.7	-0.4
3548	ok	0.25	0.2	2.46e-03	5.7	5.7	5.7	5.7	4.0	0.6	3.5	-3.1	-0.7	-0.4
3549	ok	0.25	0.2	1.57e-03	5.7	5.7	5.7	5.7	1.5	4.2	-1.6	3.5	0.7	-0.3
3550	ok	0.25	0.2	2.31e-03	5.7	5.7	5.7	5.7	5.7	0.7	2.0	-3.2	-0.7	-0.4
3551	ok	0.25	0.2	2.90e-03	5.7	5.7	5.7	5.7	2.2	3.9	-2.0	3.5	0.7	-0.3
3552	ok	0.25	0.1	3.26e-03	5.7	5.7	5.7	5.7	-7.6	-0.7	1.7	-3.2	-0.7	-0.4
3553	ok	0.25	0.2	4.02e-03	5.7	5.7	5.7	5.7	2.5	2.9	0.2	3.6	0.7	-0.4

3554	ok	0.25	0.1	4.03e-03	5.7	5.7	5.7	5.7	-7.7	0.3	1.7	-3.5	-0.6	-0.5
3555	ok	0.25	0.2	5.40e-03	5.7	5.7	5.7	5.7	3.7	0.5	1.5	3.7	0.8	-9.88e-02
3556	ok	0.25	0.2	2.98e-03	5.7	5.7	5.7	5.7	4.3	4.74e-02	-1.8	-3.3	-0.8	-0.5
3557	ok	0.25	0.2	2.93e-03	5.7	5.7	5.7	5.7	1.7	3.0	-1.2	3.6	0.7	-0.4
3558	ok	0.25	0.2	2.29e-03	5.7	5.7	5.7	5.7	4.0	0.4	1.6	-3.3	-0.7	-0.4
3559	ok	0.25	0.2	3.14e-03	5.7	5.7	5.7	5.7	1.5	3.9	-2.9	3.6	0.7	-0.4
3560	ok	0.25	0.2	2.60e-03	5.7	5.7	5.7	5.7	-3.1	-0.3	-1.3	-3.4	-0.7	0.4
3561	ok	0.25	0.2	3.44e-03	5.7	5.7	5.7	5.7	1.0	4.2	-3.3	3.5	0.7	-0.4
3562	ok	0.25	0.2	3.06e-03	5.7	5.7	5.7	5.7	-6.6	-0.8	1.3	-3.4	-0.7	-0.5
3563	ok	0.25	0.2	3.84e-03	5.7	5.7	5.7	5.7	0.9	3.8	-2.1	3.5	0.7	-0.4
3564	ok	0.25	0.2	3.38e-03	5.7	5.7	5.7	5.7	-3.5	-0.3	-2.0	-3.4	-0.7	0.4
3565	ok	0.25	0.2	4.10e-03	5.7	5.7	5.7	5.7	-2.54e-02	2.7	-0.7	3.6	0.7	-0.4
3566	ok	0.25	0.2	3.39e-03	5.7	5.7	5.7	5.7	-6.2	0.2	1.0	-3.6	-0.6	-0.5
3567	ok	0.25	0.2	4.92e-03	5.7	5.7	5.7	5.7	1.6	0.1	1.2	3.7	0.8	-0.1
3568	ok	0.25	0.2	2.52e-03	5.7	5.7	5.7	5.7	-3.7	-2.4	-3.1	-3.6	-0.6	0.5
3569	ok	0.25	0.2	2.74e-03	5.7	5.7	5.7	5.7	0.7	2.8	-2.5	3.5	0.7	-0.4
3570	ok	0.25	0.2	2.35e-03	5.7	5.7	5.7	5.7	0.1	0.1	2.0	-3.4	-0.7	-0.5
3571	ok	0.25	0.2	2.58e-03	5.7	5.7	5.7	5.7	0.2	3.7	-3.2	3.5	0.7	-0.4
3572	ok	0.25	0.2	2.20e-03	5.7	5.7	5.7	5.7	-2.9	-0.4	-1.5	-3.4	-0.7	0.4
3573	ok	0.25	0.2	2.45e-03	5.7	5.7	5.7	5.7	-0.6	4.1	-3.5	3.4	0.7	-0.4
3574	ok	0.25	0.2	2.16e-03	5.7	5.7	5.7	5.7	-2.8	-0.6	1.5	-3.5	-0.7	-0.4
3575	ok	0.25	0.2	2.54e-03	5.7	5.7	5.7	5.7	2.43e-02	3.7	3.3	3.4	0.7	0.4
3576	ok	0.25	0.2	2.44e-03	5.7	5.7	5.7	5.7	-3.3	-0.4	1.5	-3.5	-0.7	-0.5
3577	ok	0.25	0.2	2.66e-03	5.7	5.7	5.7	5.7	0.7	2.3	2.7	3.5	0.7	0.4
3578	ok	0.25	0.2	2.51e-03	5.7	5.7	5.7	5.7	-4.1	-2.5	2.9	-3.6	-0.6	-0.5
3579	ok	0.25	0.2	4.87e-03	5.7	5.7	5.7	5.7	4.3	0.9	1.2	3.5	0.7	-0.1
3580	ok	0.25	0.2	3.24e-03	5.7	5.7	5.7	5.7	-6.4	-2.8	-3.1	-3.6	-0.6	0.5
3581	ok	0.23	0.2	4.00e-03	4.7	4.7	4.7	4.7	-0.1	3.0	0.6	3.5	0.7	0.4
3582	ok	0.23	0.2	3.28e-03	4.7	4.7	4.7	4.7	-3.3	-0.2	2.0	-3.4	-0.7	-0.4
3583	ok	0.23	0.2	3.79e-03	4.7	4.7	4.7	4.7	0.8	3.9	2.6	3.4	0.7	0.4
3584	ok	0.23	0.2	2.98e-03	4.7	4.7	4.7	4.7	-2.9	-0.3	1.7	-3.4	-0.7	-0.4
3585	ok	0.23	0.2	3.38e-03	4.7	4.7	4.7	4.7	0.9	4.3	3.3	3.5	0.7	0.4
3586	ok	0.23	0.2	2.53e-03	4.7	4.7	4.7	4.7	-2.8	-0.3	1.3	-3.4	-0.7	-0.4
3587	ok	0.23	0.2	3.09e-03	4.7	4.7	4.7	4.7	1.5	3.9	2.8	3.5	0.7	0.4
3588	ok	0.23	0.2	2.21e-03	4.7	4.7	4.7	4.7	-2.7	1.64e-02	1.5	-3.3	-0.7	-0.4
3589	ok	0.23	0.2	2.84e-03	4.7	4.7	4.7	4.7	1.7	3.1	1.0	3.6	0.7	0.4
3590	ok	0.23	0.2	2.92e-03	4.7	4.7	4.7	4.7	-3.7	-2.1	3.2	-3.5	-0.6	-0.4
3591	ok	0.23	0.2	5.43e-03	4.7	4.7	4.7	4.7	3.4	-1.4	0.6	3.6	0.8	-4.79e-02
3592	ok	0.23	0.2	3.99e-03	4.7	4.7	4.7	4.7	-7.4	0.3	-1.6	-3.4	-0.6	0.5
3593	ok	0.23	0.2	3.99e-03	4.7	4.7	4.7	4.7	2.6	3.1	-0.2	3.5	0.7	0.4
3594	ok	0.23	0.2	3.18e-03	4.7	4.7	4.7	4.7	-2.5	-9.94e-02	2.6	-3.2	-0.7	-0.4
3595	ok	0.23	0.2	2.91e-03	4.7	4.7	4.7	4.7	2.2	3.9	1.9	3.4	0.7	0.3
3596	ok	0.23	0.2	2.25e-03	4.7	4.7	4.7	4.7	-0.8	-0.3	2.7	-3.2	-0.7	-0.4
3597	ok	0.23	0.2	1.54e-03	4.7	4.7	4.7	4.7	1.4	4.3	1.5	3.5	0.7	0.3
3598	ok	0.23	0.2	2.37e-03	4.7	4.7	4.7	4.7	4.0	0.7	-3.3	-3.1	-0.7	0.4
3599	ok	0.23	0.2	2.12e-03	4.7	4.7	4.7	4.7	3.3	3.8	5.71e-02	3.4	0.7	0.4
3600	ok	0.23	0.2	2.56e-03	4.7	4.7	4.7	4.7	-3.8	-0.9	3.6	-3.7	-0.6	-0.2
3601	ok	0.23	0.2	4.76e-03	4.7	4.7	4.7	4.7	4.2	-2.2	-3.8	4.3	1.0	-0.1
3602	ok	0.25	0.2	4.65e-03	5.7	5.7	5.7	5.7	1.4	-5.3	4.8	3.2	0.8	-4.69e-04
3603	ok	0.25	0.1	3.57e-03	5.7	5.7	5.7	5.7	-2.2	2.5	4.2	-2.2	-0.6	-0.5
3604	ok	0.25	0.1	4.59e-03	5.7	5.7	5.7	5.7	3.6	1.2	3.9	2.9	0.6	-0.2
3605	ok	0.25	0.1	4.33e-03	5.7	5.7	5.7	5.7	2.0	1.1	3.9	-2.6	-0.5	-0.5
3606	ok	0.25	0.1	4.69e-03	5.7	5.7	5.7	5.7	3.5	1.0	1.4	2.9	0.6	-0.2
3607	ok	0.25	0.1	4.27e-03	5.7	5.7	5.7	5.7	2.3	0.9	2.3	-2.6	-0.6	-0.5
3608	ok	0.25	0.1	4.47e-03	5.7	5.7	5.7	5.7	2.7	1.0	0.9	2.9	0.6	-0.2
3609	ok	0.25	0.1	4.10e-03	5.7	5.7	5.7	5.7	2.2	-0.2	7.2	-2.6	-0.5	-0.5
3610	ok	0.25	0.1	4.15e-03	5.7	5.7	5.7	5.7	2.6	0.5	3.6	2.9	0.6	-0.2
3611	ok	0.25	0.1	4.00e-03	5.7	5.7	5.7	5.7	1.5	-2.3	6.4	-2.6	-0.5	-0.5
3612	ok	0.25	0.1	4.17e-03	5.7	5.7	5.7	5.7	2.3	1.1	3.0	2.9	0.6	-0.1
3613	ok	0.25	0.1	4.12e-03	5.7	5.7	5.7	5.7	1.5	1.9	2.3	-2.7	-0.6	-0.5
3614	ok	0.25	0.1	4.43e-03	5.7	5.7	5.7	5.7	2.1	0.8	1.4	3.0	0.6	-0.2
3615	ok	0.25	0.1	4.07e-03	5.7	5.7	5.7	5.7	0.2	0.8	6.4	-2.7	-0.5	-0.5
3616	ok	0.25	0.1	4.42e-03	5.7	5.7	5.7	5.7	1.9	-0.6	5.5	3.0	0.6	-0.2
3617	ok	0.25	0.1	3.95e-03	5.7	5.7	5.7	5.7	0.3	0.7	1.6	-2.8	-0.6	-0.5
3618	ok	0.25	0.1	4.45e-03	5.7	5.7	5.7	5.7	1.2	-1.2	4.8	2.9	0.6	-0.2
3619	ok	0.25	0.1	3.92e-03	5.7	5.7	5.7	5.7	-6.3	0.3	-6.0	-2.8	-0.6	0.5
3620	ok	0.25	0.1	4.33e-03	5.7	5.7	5.7	5.7	0.3	-1.0	4.9	2.9	0.6	-0.1
3621	ok	0.25	0.1	3.85e-03	5.7	5.7	5.7	5.7	-5.8	0.5	-6.3	-2.8	-0.6	0.5
3622	ok	0.25	0.1	4.05e-03	5.7	5.7	5.7	5.7	0.3	-0.5	6.2	2.9	0.6	-0.2
3623	ok	0.25	0.1	3.72e-03	5.7	5.7	5.7	5.7	-6.0	1.2	-2.1	-2.8	-0.6	0.5
3624	ok	0.25	0.1	3.99e-03	5.7	5.7	5.7	5.7	-1.0	-0.2	4.9	2.8	0.6	-0.2
3625	ok	0.25	0.1	3.59e-03	5.7	5.7	5.7	5.7	-5.7	1.6	2.0	-2.8	-0.6	-0.5
3626	ok	0.25	0.1	4.33e-03	5.7	5.7	5.7	5.7	-2.30e-03	0.5	5.5	2.9	0.6	-0.2
3627	ok	0.25	0.1	3.91e-03	5.7	5.7	5.7	5.7	-5.4	0.5	5.9	-2.8	-0.6	-0.5
3628	ok	0.25	0.1	4.30e-03	5.7	5.7	5.7	5.7	0.1	-0.4	4.7	2.9	0.6	-0.2
3629	ok	0.25	0.1	3.74e-03	5.7	5.7	5.7	5.7	-5.6	2.10e-02	1.8	-2.8	-0.6	-0.5
3630	ok	0.25	0.1	4.35e-03	5.7	5.7	5.7	5.7	-0.5	-1.0	4.1	2.9	0.6	-0.2
3631	ok	0.25	0.1	3.70e-03	5.7	5.7	5.7	5.7	-6.2	-0.3	1.3	-2.9	-0.6	-0.5
3632	ok	0.25	0.1	4.40e-03	5.7	5.7	5.7	5.7	-1.4	-1.6	4.1	2.8	0.6	-0.2

3633	ok	0.25	0.1	3.93e-03	5.7	5.7	5.7	5.7	-6.5	-0.5	5.4	-2.9	-0.6	-0.5
3634	ok	0.25	0.1	4.25e-03	5.7	5.7	5.7	5.7	-1.1	-1.5	5.7	2.7	0.6	-0.2
3635	ok	0.25	0.1	3.53e-03	5.7	5.7	5.7	5.7	-4.9	1.5	-2.1	-2.8	-0.6	0.5
3636	ok	0.25	0.1	3.96e-03	5.7	5.7	5.7	5.7	-4.2	-0.6	4.5	2.6	0.5	-0.2
3637	ok	0.25	0.1	3.78e-03	5.7	5.7	5.7	5.7	-6.3	1.2	2.0	-2.8	-0.6	-0.5
3638	ok	0.25	0.2	4.08e-03	5.7	5.7	5.7	5.7	-5.9	1.1	5.0	2.7	0.6	-0.1
3639	ok	0.25	0.2	3.82e-03	5.7	5.7	5.7	5.7	-6.2	0.2	5.8	-2.8	-0.5	-0.5
3640	ok	0.25	0.2	4.36e-03	5.7	5.7	5.7	5.7	-5.6	0.2	4.3	2.7	0.6	-0.1
3641	ok	0.25	0.2	3.84e-03	5.7	5.7	5.7	5.7	-6.2	-0.3	1.3	-2.8	-0.6	-0.5
3642	ok	0.25	0.2	4.43e-03	5.7	5.7	5.7	5.7	-5.2	-0.4	3.9	2.6	0.6	-0.1
3643	ok	0.25	0.2	3.87e-03	5.7	5.7	5.7	5.7	0.6	1.2	-5.9	-2.8	-0.5	0.5
3644	ok	0.25	0.2	4.40e-03	5.7	5.7	5.7	5.7	-5.1	-1.4	4.2	2.6	0.6	-0.1
3645	ok	0.25	0.2	4.00e-03	5.7	5.7	5.7	5.7	0.8	1.1	-6.5	-2.7	-0.5	0.5
3646	ok	0.25	0.2	4.40e-03	5.7	5.7	5.7	5.7	-5.8	-0.8	5.7	2.5	0.5	-0.2
3647	ok	0.23	0.2	4.20e-03	4.7	4.7	4.7	4.7	1.8	1.8	-2.1	-2.7	-0.6	0.5
3648	ok	0.23	0.2	4.21e-03	4.7	4.7	4.7	4.7	-3.7	-0.7	5.4	2.4	0.5	-0.2
3649	ok	0.23	0.2	4.09e-03	4.7	4.7	4.7	4.7	-5.1	-0.1	7.0	-2.7	-0.5	-0.4
3650	ok	0.23	0.2	4.27e-03	4.7	4.7	4.7	4.7	2.8	0.8	-3.3	2.9	0.6	0.2
3651	ok	0.23	0.2	4.18e-03	4.7	4.7	4.7	4.7	-4.2	0.3	7.6	-2.7	-0.5	-0.5
3652	ok	0.23	0.2	4.61e-03	4.7	4.7	4.7	4.7	-3.5	0.4	6.5	2.4	0.5	-0.1
3653	ok	0.23	0.2	4.33e-03	4.7	4.7	4.7	4.7	-3.7	-3.29e-02	8.0	-2.6	-0.5	-0.4
3654	ok	0.23	0.2	4.79e-03	4.7	4.7	4.7	4.7	-2.1	-0.2	6.8	2.3	0.5	-0.1
3655	ok	0.23	0.2	4.40e-03	4.7	4.7	4.7	4.7	2.2	1.2	-3.5	-2.5	-0.5	0.5
3656	ok	0.23	0.2	4.68e-03	4.7	4.7	4.7	4.7	3.5	1.6	-3.6	2.8	0.6	0.2
3657	ok	0.23	0.2	3.70e-03	4.7	4.7	4.7	4.7	-1.1	0.2	7.3	-2.7	-0.5	-0.3
3658	ok	0.23	0.2	4.79e-03	4.7	4.7	4.7	4.7	1.2	-5.3	-4.7	3.2	0.7	1.21e-03
3659	ok	0.25	0.1	3.44e-03	5.7	5.7	5.7	5.7	0.9	1.3	8.8	2.0	0.3	-1.06e-02
3660	ok	0.25	9.27e-02	3.59e-03	5.7	5.7	5.7	5.7	0.7	8.36e-02	8.8	-1.5	-0.4	-0.4
3661	ok	0.25	9.68e-02	4.20e-03	5.7	5.7	5.7	5.7	1.6	0.2	10.5	1.9	0.4	-0.1
3662	ok	0.25	0.1	4.27e-03	5.7	5.7	5.7	5.7	1.2	0.7	10.5	-1.7	-0.3	-0.5
3663	ok	0.25	9.88e-02	4.80e-03	5.7	5.7	5.7	5.7	2.6	-0.5	9.7	1.9	0.4	-0.1
3664	ok	0.25	0.1	4.87e-03	5.7	5.7	5.7	5.7	1.5	0.2	9.9	-1.7	-0.3	-0.5
3665	ok	0.25	9.85e-02	5.03e-03	5.7	5.7	5.7	5.7	2.7	-5.73e-02	10.4	1.9	0.4	-0.2
3666	ok	0.25	0.1	5.10e-03	5.7	5.7	5.7	5.7	1.5	0.1	9.1	-1.7	-0.3	-0.5
3667	ok	0.25	9.98e-02	5.00e-03	5.7	5.7	5.7	5.7	2.7	0.1	10.0	2.0	0.4	-0.2
3668	ok	0.25	0.1	5.09e-03	5.7	5.7	5.7	5.7	1.3	-0.5	8.6	-1.8	-0.4	-0.5
3669	ok	0.25	9.59e-02	5.15e-03	5.7	5.7	5.7	5.7	1.9	0.4	8.7	1.9	0.4	-0.2
3670	ok	0.25	0.1	5.31e-03	5.7	5.7	5.7	5.7	1.2	1.7	7.0	-1.8	-0.4	-0.5
3671	ok	0.25	9.49e-02	5.21e-03	5.7	5.7	5.7	5.7	1.7	0.6	8.7	1.9	0.4	-0.2
3672	ok	0.25	0.1	5.24e-03	5.7	5.7	5.7	5.7	0.4	0.2	8.5	-1.8	-0.4	-0.5
3673	ok	0.25	9.34e-02	5.33e-03	5.7	5.7	5.7	5.7	1.5	-8.88e-02	8.5	1.9	0.4	-0.2
3674	ok	0.25	0.1	5.42e-03	5.7	5.7	5.7	5.7	-0.2	-0.2	8.3	-1.8	-0.4	-0.5
3675	ok	0.25	9.13e-02	5.37e-03	5.7	5.7	5.7	5.7	0.7	-0.5	8.2	1.9	0.4	-0.2
3676	ok	0.25	0.1	5.48e-03	5.7	5.7	5.7	5.7	-9.0	-0.8	-6.0	-1.8	-0.3	0.5
3677	ok	0.25	8.85e-02	5.37e-03	5.7	5.7	5.7	5.7	-7.85e-02	-0.5	7.9	1.9	0.4	-0.2
3678	ok	0.25	9.97e-02	5.46e-03	5.7	5.7	5.7	5.7	-1.6	2.74e-02	5.9	-1.8	-0.4	-0.5
3679	ok	0.25	8.80e-02	5.13e-03	5.7	5.7	5.7	5.7	-0.8	-0.2	8.6	1.9	0.4	-0.2
3680	ok	0.25	9.93e-02	5.17e-03	5.7	5.7	5.7	5.7	-2.5	-1.2	7.5	-1.8	-0.4	-0.5
3681	ok	0.25	8.29e-02	4.96e-03	5.7	5.7	5.7	5.7	-2.0	-2.23e-02	7.8	1.9	0.4	-0.2
3682	ok	0.25	9.71e-02	5.10e-03	5.7	5.7	5.7	5.7	-3.7	1.2	6.2	-1.8	-0.4	-0.5
3683	ok	0.25	8.14e-02	4.81e-03	5.7	5.7	5.7	5.7	-2.8	0.1	8.2	1.9	0.4	-0.2
3684	ok	0.25	9.69e-02	4.79e-03	5.7	5.7	5.7	5.7	-7.2	-0.7	-5.6	-1.8	-0.4	0.5
3685	ok	0.25	7.91e-02	4.74e-03	5.7	5.7	5.7	5.7	-3.9	-0.3	7.8	1.9	0.4	-0.2
3686	ok	0.25	9.52e-02	4.75e-03	5.7	5.7	5.7	5.7	-4.9	-0.6	7.9	-1.8	-0.4	-0.5
3687	ok	0.25	7.62e-02	4.65e-03	5.7	5.7	5.7	5.7	-4.6	-1.3	7.3	1.8	0.4	-0.2
3688	ok	0.25	9.43e-02	4.72e-03	5.7	5.7	5.7	5.7	-5.7	-0.9	7.6	-1.9	-0.4	-0.5
3689	ok	0.25	7.77e-02	4.61e-03	5.7	5.7	5.7	5.7	-5.1	-1.5	7.9	1.8	0.4	-0.2
3690	ok	0.25	9.82e-02	4.79e-03	5.7	5.7	5.7	5.7	-7.1	-0.9	5.6	-1.9	-0.4	-0.5
3691	ok	0.25	8.19e-02	4.73e-03	5.7	5.7	5.7	5.7	-6.0	-0.8	8.0	1.8	0.4	-0.2
3692	ok	0.25	9.84e-02	5.18e-03	5.7	5.7	5.7	5.7	-3.3	1.1	-6.1	-1.8	-0.4	0.5
3693	ok	0.25	8.41e-02	5.03e-03	5.7	5.7	5.7	5.7	-7.0	-0.4	7.2	1.8	0.4	-0.2
3694	ok	0.25	9.99e-02	5.40e-03	5.7	5.7	5.7	5.7	-2.0	-1.2	-7.7	-1.8	-0.4	0.5
3695	ok	0.25	8.64e-02	5.45e-03	5.7	5.7	5.7	5.7	-7.2	-0.7	7.5	1.7	0.3	-0.2
3696	ok	0.25	9.90e-02	5.68e-03	5.7	5.7	5.7	5.7	-9.1	-0.6	8.0	-1.8	-0.4	-0.5
3697	ok	0.25	8.72e-02	5.69e-03	5.7	5.7	5.7	5.7	-7.1	-1.1	7.6	1.7	0.3	-0.2
3698	ok	0.25	0.1	5.69e-03	5.7	5.7	5.7	5.7	-9.2	-0.7	8.0	-1.8	-0.4	-0.5
3699	ok	0.25	8.98e-02	5.67e-03	5.7	5.7	5.7	5.7	-7.2	-1.4	7.3	1.6	0.3	-0.2
3700	ok	0.25	0.1	5.61e-03	5.7	5.7	5.7	5.7	-9.3	-0.9	7.7	-1.8	-0.4	-0.5
3701	ok	0.25	9.18e-02	5.62e-03	5.7	5.7	5.7	5.7	-7.1	-1.4	7.2	1.6	0.3	-0.2
3702	ok	0.25	0.1	5.39e-03	5.7	5.7	5.7	5.7	9.71e-03	0.1	-8.8	-1.7	-0.4	0.5
3703	ok	0.25	9.29e-02	5.49e-03	5.7	5.7	5.7	5.7	-6.1	-1.7	7.8	1.6	0.3	-0.2
3704	ok	0.25	0.1	5.39e-03	5.7	5.7	5.7	5.7	-8.1	-1.3	7.7	-1.8	-0.4	-0.5
3705	ok	0.25	0.1	5.21e-03	5.7	5.7	5.7	5.7	-6.5	-0.5	7.6	1.6	0.3	-0.2
3706	ok	0.25	0.1	5.32e-03	5.7	5.7	5.7	5.7	1.5	-0.5	-8.7	-1.8	-0.4	0.5
3707	ok	0.25	0.1	5.39e-03	5.7	5.7	5.7	5.7	-5.5	-0.7	8.2	1.5	0.3	-0.2
3708	ok	0.25	0.1	5.33e-03	5.7	5.7	5.7	5.7	1.5	0.5	-7.5	-1.7	-0.3	0.5
3709	ok	0.25	0.1	5.37e-03	5.7	5.7	5.7	5.7	-4.0	-1.0	8.7	1.5	0.3	-0.2
3710	ok	0.25	0.1	5.07e-03	5.7	5.7	5.7	5.7	1.3	0.3	-10.0	-1.6	-0.3	0.5
3711	ok	0.25	0.1	5.14e-03	5.7	5.7	5.7	5.7	-2.1	-1.1	8.7	1.4	0.3	-0.2

3712	ok	0.25	0.1	4.54e-03	5.7	5.7	5.7	5.7	0.9	0.7	-10.5	-1.6	-0.3	0.5
3713	ok	0.23	0.1	4.66e-03	4.7	4.7	4.7	4.7	1.7	0.2	-10.0	1.8	0.4	0.1
3714	ok	0.23	0.1	3.86e-03	4.7	4.7	4.7	4.7	-1.1	0.7	8.6	-1.8	-0.3	-0.3
3715	ok	0.23	0.1	3.72e-03	4.7	4.7	4.7	4.7	0.8	1.2	-8.8	2.0	0.3	1.14e-02
3716	ok	0.25	5.54e-02	3.74e-03	5.7	5.7	5.7	5.7	0.1	0.1	7.8	1.0	0.4	-3.55e-02
3717	ok	0.25	6.80e-02	3.98e-03	5.7	5.7	5.7	5.7	-0.3	1.2	-6.0	-0.9	-0.4	0.2
3718	ok	0.25	5.79e-02	4.33e-03	5.7	5.7	5.7	5.7	2.2	1.1	9.9	0.9	0.2	-0.2
3719	ok	0.25	7.99e-02	4.66e-03	5.7	5.7	5.7	5.7	3.6	0.4	9.5	-0.8	-0.3	-0.4
3720	ok	0.25	5.98e-02	5.10e-03	5.7	5.7	5.7	5.7	3.4	1.0	10.2	0.9	0.2	-0.2
3721	ok	0.25	8.13e-02	5.34e-03	5.7	5.7	5.7	5.7	4.4	0.3	9.4	-0.8	-0.3	-0.4
3722	ok	0.25	6.03e-02	5.69e-03	5.7	5.7	5.7	5.7	3.9	0.9	9.9	0.9	0.2	-0.2
3723	ok	0.25	8.06e-02	5.81e-03	5.7	5.7	5.7	5.7	4.6	0.2	8.9	-0.9	-0.3	-0.4
3724	ok	0.25	6.01e-02	5.98e-03	5.7	5.7	5.7	5.7	4.0	0.9	9.5	1.0	0.2	-0.2
3725	ok	0.25	8.09e-02	6.06e-03	5.7	5.7	5.7	5.7	4.4	0.1	8.7	-0.9	-0.4	-0.4
3726	ok	0.25	5.66e-02	6.27e-03	5.7	5.7	5.7	5.7	3.7	0.8	9.0	0.9	0.2	-0.2
3727	ok	0.25	7.93e-02	6.41e-03	5.7	5.7	5.7	5.7	3.9	0.2	8.8	-0.9	-0.4	-0.4
3728	ok	0.25	5.56e-02	6.59e-03	5.7	5.7	5.7	5.7	2.9	0.9	9.1	0.9	0.2	-0.2
3729	ok	0.25	7.85e-02	6.59e-03	5.7	5.7	5.7	5.7	3.1	0.2	9.1	-0.9	-0.3	-0.4
3730	ok	0.25	5.34e-02	6.73e-03	5.7	5.7	5.7	5.7	2.2	0.6	9.2	0.9	0.2	-0.2
3731	ok	0.25	7.62e-02	6.57e-03	5.7	5.7	5.7	5.7	2.3	-8.11e-02	8.9	-0.9	-0.3	-0.4
3732	ok	0.25	5.05e-02	6.73e-03	5.7	5.7	5.7	5.7	1.2	0.4	9.1	0.9	0.2	-0.2
3733	ok	0.25	7.34e-02	6.56e-03	5.7	5.7	5.7	5.7	1.2	-0.2	8.6	-0.9	-0.3	-0.4
3734	ok	0.25	4.70e-02	6.72e-03	5.7	5.7	5.7	5.7	5.86e-02	0.3	8.9	0.9	0.2	-0.2
3735	ok	0.25	7.06e-02	6.44e-03	5.7	5.7	5.7	5.7	-1.13e-02	-5.37e-02	8.4	-0.9	-0.3	-0.4
3736	ok	0.25	4.37e-02	6.55e-03	5.7	5.7	5.7	5.7	-1.2	0.2	8.8	0.9	0.2	-0.2
3737	ok	0.25	6.89e-02	6.12e-03	5.7	5.7	5.7	5.7	-2.4	-5.70e-02	8.4	-0.9	-0.3	-0.4
3738	ok	0.25	3.81e-02	6.24e-03	5.7	5.7	5.7	5.7	-2.6	5.03e-02	8.5	0.9	0.2	-0.2
3739	ok	0.25	6.62e-02	5.77e-03	5.7	5.7	5.7	5.7	-3.7	8.26e-03	8.6	-0.9	-0.4	-0.4
3740	ok	0.25	3.57e-02	5.87e-03	5.7	5.7	5.7	5.7	-4.2	0.2	8.7	0.9	0.2	-0.2
3741	ok	0.25	6.47e-02	5.53e-03	5.7	5.7	5.7	5.7	-5.0	-8.87e-04	8.9	-0.9	-0.3	-0.4
3742	ok	0.25	3.45e-02	5.56e-03	5.7	5.7	5.7	5.7	-5.3	-0.4	8.8	0.9	0.2	-0.2
3743	ok	0.25	6.31e-02	5.24e-03	5.7	5.7	5.7	5.7	-6.1	-0.3	8.7	-0.9	-0.3	-0.4
3744	ok	0.25	3.17e-02	5.39e-03	5.7	5.7	5.7	5.7	-6.6	-0.7	8.8	0.9	0.2	-0.2
3745	ok	0.25	6.24e-02	5.15e-03	5.7	5.7	5.7	5.7	-7.4	-0.5	8.3	-0.9	-0.3	-0.4
3746	ok	0.25	3.37e-02	5.60e-03	5.7	5.7	5.7	5.7	-8.1	-0.4	8.5	0.9	0.2	-0.2
3747	ok	0.25	6.51e-02	5.48e-03	5.7	5.7	5.7	5.7	-4.8	-7.52e-02	-8.8	-0.9	-0.3	0.4
3748	ok	0.25	3.59e-02	5.86e-03	5.7	5.7	5.7	5.7	-9.4	-0.5	8.2	0.9	0.2	-0.2
3749	ok	0.25	6.69e-02	5.82e-03	5.7	5.7	5.7	5.7	-3.5	8.54e-02	-8.7	-0.9	-0.4	0.4
3750	ok	0.25	3.91e-02	6.31e-03	5.7	5.7	5.7	5.7	-10.5	-0.7	8.0	0.8	0.1	-0.2
3751	ok	0.25	6.91e-02	6.25e-03	5.7	5.7	5.7	5.7	-1.9	-8.48e-02	-8.8	-0.9	-0.3	0.4
3752	ok	0.25	4.32e-02	6.82e-03	5.7	5.7	5.7	5.7	-12.5	-0.1	8.8	0.8	0.2	-0.2
3753	ok	0.25	7.11e-02	6.48e-03	5.7	5.7	5.7	5.7	0.7	-0.3	-9.1	-0.9	-0.3	0.4
3754	ok	0.25	4.58e-02	7.01e-03	5.7	5.7	5.7	5.7	-12.9	-0.3	9.0	0.8	0.2	-0.2
3755	ok	0.25	7.37e-02	6.60e-03	5.7	5.7	5.7	5.7	1.8	-0.4	-9.4	-0.9	-0.3	0.4
3756	ok	0.25	4.87e-02	7.08e-03	5.7	5.7	5.7	5.7	-13.2	-0.4	8.7	0.8	0.2	-0.2
3757	ok	0.25	7.61e-02	6.65e-03	5.7	5.7	5.7	5.7	2.9	-0.4	-9.8	-0.9	-0.3	0.4
3758	ok	0.25	5.10e-02	7.07e-03	5.7	5.7	5.7	5.7	-13.1	-0.4	8.4	0.7	0.2	-0.2
3759	ok	0.25	7.76e-02	6.68e-03	5.7	5.7	5.7	5.7	3.6	-5.41e-02	-9.9	-0.8	-0.3	0.4
3760	ok	0.25	5.22e-02	6.92e-03	5.7	5.7	5.7	5.7	-12.7	-0.5	8.2	0.7	0.2	-0.2
3761	ok	0.25	7.81e-02	6.49e-03	5.7	5.7	5.7	5.7	4.0	-3.81e-02	-9.5	-0.8	-0.3	0.4
3762	ok	0.25	5.61e-02	6.40e-03	5.7	5.7	5.7	5.7	-12.1	-0.9	7.3	0.7	0.1	-0.2
3763	ok	0.25	8.06e-02	6.20e-03	5.7	5.7	5.7	5.7	4.7	5.17e-02	-9.2	-0.9	-0.4	0.4
3764	ok	0.25	5.71e-02	6.49e-03	5.7	5.7	5.7	5.7	-10.9	-0.4	8.3	0.7	0.2	-0.2
3765	ok	0.25	7.95e-02	6.02e-03	5.7	5.7	5.7	5.7	5.1	-4.31e-02	-9.8	-0.8	-0.3	0.4
3766	ok	0.25	5.86e-02	5.86e-03	5.7	5.7	5.7	5.7	-8.3	-0.5	8.0	0.7	0.1	-0.2
3767	ok	0.25	8.04e-02	5.47e-03	5.7	5.7	5.7	5.7	4.4	8.62e-02	-10.0	-0.8	-0.3	0.4
3768	ok	0.25	5.89e-02	5.24e-03	5.7	5.7	5.7	5.7	-5.3	-0.3	7.6	0.6	0.1	-0.2
3769	ok	0.25	7.91e-02	4.76e-03	5.7	5.7	5.7	5.7	3.4	0.3	-10.0	-0.8	-0.3	0.4
3770	ok	0.25	6.79e-02	4.54e-03	5.7	5.7	5.7	5.7	-1.7	7.85e-02	6.1	0.5	6.62e-02	-0.1
3771	ok	0.25	8.09e-02	4.21e-03	5.7	5.7	5.7	5.7	-0.3	1.1	6.5	-0.9	-0.4	-0.2
3772	ok	0.25	6.73e-02	3.93e-03	5.7	5.7	5.7	5.7	0.2	0.2	-8.2	1.0	0.4	3.90e-02
3773	ok	0.25	2.52e-02	2.93e-03	5.7	5.7	5.7	5.7	0.5	1.9	-6.9	0.2	-0.2	-2.36e-04
3774	ok	0.25	4.22e-02	3.28e-03	5.7	5.7	5.7	5.7	3.3	-0.1	8.1	0.2	0.2	-0.4
3775	ok	0.25	4.24e-02	4.44e-03	5.7	5.7	5.7	5.7	-6.2	-0.9	-7.1	0.3	6.08e-02	0.1
3776	ok	0.25	5.56e-02	4.71e-03	5.7	5.7	5.7	5.7	5.6	0.9	10.1	0.2	0.2	-0.4
3777	ok	0.25	4.67e-02	5.88e-03	5.7	5.7	5.7	5.7	-10.7	-1.4	-7.3	0.3	6.83e-02	0.1
3778	ok	0.25	5.96e-02	6.05e-03	5.7	5.7	5.7	5.7	6.8	1.0	10.0	0.2	0.2	-0.4
3779	ok	0.25	4.78e-02	6.97e-03	5.7	5.7	5.7	5.7	-14.1	-1.7	-7.3	0.3	6.44e-02	0.1
3780	ok	0.25	6.06e-02	7.00e-03	5.7	5.7	5.7	5.7	7.1	0.9	9.5	0.2	0.2	-0.4
3781	ok	0.25	4.74e-02	7.69e-03	5.7	5.7	5.7	5.7	-16.5	-1.8	-7.1	0.3	6.40e-02	0.1
3782	ok	0.25	6.01e-02	7.57e-03	5.7	5.7	5.7	5.7	6.8	0.9	9.2	0.2	0.1	-0.4
3783	ok	0.25	4.65e-02	8.08e-03	5.7	5.7	5.7	5.7	-17.8	-1.8	-6.8	0.2	6.51e-02	0.1
3784	ok	0.25	5.83e-02	7.99e-03	5.7	5.7	5.7	5.7	6.0	1.1	9.2	0.2	0.1	-0.4
3785	ok	0.25	3.45e-02	8.35e-03	5.7	5.7	5.7	5.7	5.8	1.4	8.9	0.2	-1.85e-02	-0.1
3786	ok	0.25	4.78e-02	8.21e-03	5.7	5.7	5.7	5.7	5.2	1.0	9.3	0.2	0.1	-0.4
3787	ok	0.25	3.37e-02	8.41e-03	5.7	5.7	5.7	5.7	5.1	1.3	9.0	0.2	-2.54e-02	-0.1
3788	ok	0.25	5.25e-02	8.28e-03	5.7	5.7	5.7	5.7	-18.2	-1.0	-7.2	-0.2	0.2	0.4
3789	ok	0.25	4.07e-02	8.38e-03	5.7	5.7	5.7	5.7	3.9	1.1	8.8	-0.2	-2.97e-02	-0.1
3790	ok	0.25	4.95e-02	8.23e-03	5.7	5.7	5.7	5.7	2.5	0.6	8.9	-0.2	9.50e-02	-0.5

3791	ok	0.25	3.77e-02	8.26e-03	5.7	5.7	5.7	5.7	2.3	0.8	8.6	-0.2	-2.91e-02	-0.1
3792	ok	0.25	4.59e-02	8.05e-03	5.7	5.7	5.7	5.7	0.7	0.4	8.6	-0.2	9.56e-02	-0.5
3793	ok	0.25	3.46e-02	7.99e-03	5.7	5.7	5.7	5.7	0.5	0.6	8.4	-0.2	-2.43e-02	-0.2
3794	ok	0.25	4.21e-02	7.64e-03	5.7	5.7	5.7	5.7	-2.8	0.3	8.5	-0.2	0.1	-0.5
3795	ok	0.25	3.10e-02	7.47e-03	5.7	5.7	5.7	5.7	-2.8	0.5	8.3	-0.2	-2.00e-02	-0.1
3796	ok	0.25	3.94e-02	7.07e-03	5.7	5.7	5.7	5.7	-4.6	0.4	8.7	-0.2	0.1	-0.5
3797	ok	0.25	2.77e-02	6.84e-03	5.7	5.7	5.7	5.7	-12.5	-1.0	-7.9	-0.2	-3.01e-02	0.2
3798	ok	0.25	3.79e-02	6.48e-03	5.7	5.7	5.7	5.7	-6.3	0.3	8.9	-0.2	9.44e-02	-0.5
3799	ok	0.25	2.59e-02	6.40e-03	5.7	5.7	5.7	5.7	-10.6	-0.8	-8.1	-0.2	-3.02e-02	0.2
3800	ok	0.25	3.43e-02	5.97e-03	5.7	5.7	5.7	5.7	-8.1	-0.1	8.5	-0.2	9.94e-02	-0.5
3801	ok	0.25	2.20e-02	5.82e-03	5.7	5.7	5.7	5.7	-8.4	-0.5	-8.3	-0.2	-1.84e-02	0.2
3802	ok	0.25	3.39e-02	5.85e-03	5.7	5.7	5.7	5.7	-10.0	-0.2	8.3	-0.2	9.99e-02	-0.5
3803	ok	0.25	2.59e-02	6.24e-03	5.7	5.7	5.7	5.7	-6.4	-2.43e-02	-8.6	-0.2	-2.38e-02	0.2
3804	ok	0.25	3.73e-02	6.44e-03	5.7	5.7	5.7	5.7	-6.3	0.2	-8.7	-0.2	9.70e-02	0.5
3805	ok	0.25	2.83e-02	6.78e-03	5.7	5.7	5.7	5.7	-4.6	0.3	-8.6	-0.2	-2.63e-02	0.2
3806	ok	0.25	3.96e-02	7.06e-03	5.7	5.7	5.7	5.7	-4.6	0.5	-8.8	-0.2	0.1	0.5
3807	ok	0.25	3.15e-02	7.42e-03	5.7	5.7	5.7	5.7	-2.7	0.4	-8.7	-0.2	-2.11e-02	0.1
3808	ok	0.25	4.19e-02	7.74e-03	5.7	5.7	5.7	5.7	-16.2	-0.9	7.8	-0.2	0.1	-0.4
3809	ok	0.25	3.38e-02	7.80e-03	5.7	5.7	5.7	5.7	-1.0	1.3	-9.1	-0.1	1.29e-02	0.2
3810	ok	0.25	4.46e-02	8.20e-03	5.7	5.7	5.7	5.7	0.6	-0.1	-8.9	-0.2	9.99e-02	0.4
3811	ok	0.25	3.78e-02	8.26e-03	5.7	5.7	5.7	5.7	-17.1	-0.5	8.6	-6.29e-02	7.40e-02	-0.2
3812	ok	0.25	4.82e-02	8.39e-03	5.7	5.7	5.7	5.7	-17.9	-1.2	8.0	-0.2	0.2	-0.4
3813	ok	0.25	4.06e-02	8.46e-03	5.7	5.7	5.7	5.7	-17.8	-0.7	8.4	-5.18e-02	6.86e-02	-0.2
3814	ok	0.25	5.13e-02	8.44e-03	5.7	5.7	5.7	5.7	-18.3	-1.4	7.6	-0.2	0.2	-0.4
3815	ok	0.25	3.60e-02	8.52e-03	5.7	5.7	5.7	5.7	5.1	2.0	-9.8	0.2	9.72e-03	0.2
3816	ok	0.25	5.06e-02	8.36e-03	5.7	5.7	5.7	5.7	-18.4	-1.5	7.2	-0.2	0.2	-0.4
3817	ok	0.25	3.66e-02	8.47e-03	5.7	5.7	5.7	5.7	5.8	2.3	-9.4	0.2	2.08e-02	0.2
3818	ok	0.25	5.71e-02	8.06e-03	5.7	5.7	5.7	5.7	-17.5	-0.8	7.3	0.2	0.2	-0.4
3819	ok	0.25	4.61e-02	8.16e-03	5.7	5.7	5.7	5.7	-17.6	-1.8	7.3	0.2	6.36e-02	-0.1
3820	ok	0.25	6.20e-02	7.77e-03	5.7	5.7	5.7	5.7	6.8	0.9	-9.7	0.2	0.1	0.4
3821	ok	0.25	4.77e-02	7.82e-03	5.7	5.7	5.7	5.7	-16.7	-0.6	7.5	0.3	0.1	-0.1
3822	ok	0.25	5.95e-02	7.06e-03	5.7	5.7	5.7	5.7	-14.0	-0.7	7.7	0.2	0.2	-0.4
3823	ok	0.25	4.84e-02	7.09e-03	5.7	5.7	5.7	5.7	-14.0	-1.6	7.9	0.2	8.18e-02	-0.1
3824	ok	0.25	6.00e-02	6.23e-03	5.7	5.7	5.7	5.7	6.9	0.9	-10.5	0.2	0.2	0.4
3825	ok	0.25	4.78e-02	6.02e-03	5.7	5.7	5.7	5.7	-10.6	-1.3	7.9	0.3	8.63e-02	-0.1
3826	ok	0.25	5.62e-02	4.88e-03	5.7	5.7	5.7	5.7	5.7	0.8	-10.6	0.2	0.2	0.4
3827	ok	0.25	4.38e-02	4.61e-03	5.7	5.7	5.7	5.7	-6.2	-1.0	7.6	0.3	8.12e-02	-0.1
3828	ok	0.25	4.34e-02	3.41e-03	5.7	5.7	5.7	5.7	3.4	-0.3	-8.5	0.2	0.2	0.4
3829	ok	0.25	2.62e-02	3.07e-03	5.7	5.7	5.7	5.7	0.3	-0.7	-7.5	-7.01e-02	7.40e-02	1.00e-01

Nodo	**x/d**	**V N/M**	**ver. rid**	**Af pr-**	**Af pr+**	**Af sec-**	**Af sec+**	**N x**	**N y**	**N xy**	**M x**	**M y**	**M xy**
								-19.55	-5.34	-10.56	-4.98	-0.81	-0.54
	0.25	0.37	9.07e-03	5.65	5.65	5.65	5.65	20.59	4.97	10.53	5.77	0.98	0.53

Nodo	**Stato**	**Max tau**	**Ver V pr**	**Ver V sec**	**Af V pr**	**Af V sec**	**V pr**	**V sec**
		daN/cm2					kN/ m	kN/ m
3488	ok	2.14						
3489	ok	2.09						
3490	ok	1.68						
3491	ok	1.60						
3492	ok	1.70						
3493	ok	1.64						
3494	ok	1.67						
3495	ok	1.61						
3496	ok	2.00						
3497	ok	1.97						
3498	ok	2.09						
3499	ok	2.05						
3500	ok	1.85						
3501	ok	1.66						
3502	ok	1.75						
3503	ok	1.68						
3504	ok	1.77						
3505	ok	1.69						
3506	ok	1.72						
3507	ok	1.65						
3508	ok	2.03						
3509	ok	2.03						
3510	ok	2.12						
3511	ok	2.09						
3512	ok	1.97						
3513	ok	1.67						
3514	ok	1.73						
3515	ok	1.65						
3516	ok	1.73						
3517	ok	1.64						
3518	ok	1.70						

3519	ok	1.62
3520	ok	1.95
3521	ok	2.05
3522	ok	2.08
3523	ok	2.00
3524	ok	1.97
3525	ok	1.60
3526	ok	1.68
3527	ok	1.64
3528	ok	1.72
3529	ok	1.63
3530	ok	1.70
3531	ok	1.62
3532	ok	1.84
3533	ok	2.01
3534	ok	2.04
3535	ok	1.91
3536	ok	1.94
3537	ok	1.56
3538	ok	1.62
3539	ok	1.59
3540	ok	1.66
3541	ok	1.55
3542	ok	1.67
3543	ok	2.04
3544	ok	2.09
3545	ok	1.37
3546	ok	1.36
3547	ok	1.29
3548	ok	1.39
3549	ok	1.29
3550	ok	1.41
3551	ok	1.29
3552	ok	1.40
3553	ok	1.39
3554	ok	1.49
3555	ok	1.31
3556	ok	1.36
3557	ok	1.36
3558	ok	1.45
3559	ok	1.34
3560	ok	1.46
3561	ok	1.32
3562	ok	1.45
3563	ok	1.31
3564	ok	1.43
3565	ok	1.40
3566	ok	1.50
3567	ok	1.32
3568	ok	1.45
3569	ok	1.36
3570	ok	1.44
3571	ok	1.33
3572	ok	1.45
3573	ok	1.31
3574	ok	1.44
3575	ok	1.33
3576	ok	1.44
3577	ok	1.36
3578	ok	1.46
3579	ok	1.32
3580	ok	1.46
3581	ok	1.36
3582	ok	1.40
3583	ok	1.28
3584	ok	1.42
3585	ok	1.29
3586	ok	1.43
3587	ok	1.31
3588	ok	1.41
3589	ok	1.33
3590	ok	1.35
3591	ok	1.28
3592	ok	1.45
3593	ok	1.36
3594	ok	1.37
3595	ok	1.26
3596	ok	1.38
3597	ok	1.26

3598	ok	1.36
3599	ok	1.26
3600	ok	1.33
3601	ok	1.33
3602	ok	1.16
3603	ok	1.14
3604	ok	1.18
3605	ok	1.18
3606	ok	1.20
3607	ok	1.19
3608	ok	1.19
3609	ok	1.19
3610	ok	1.17
3611	ok	1.17
3612	ok	1.14
3613	ok	1.15
3614	ok	1.23
3615	ok	1.23
3616	ok	1.23
3617	ok	1.22
3618	ok	1.23
3619	ok	1.22
3620	ok	1.22
3621	ok	1.21
3622	ok	1.18
3623	ok	1.18
3624	ok	1.14
3625	ok	1.16
3626	ok	1.22
3627	ok	1.22
3628	ok	1.22
3629	ok	1.21
3630	ok	1.22
3631	ok	1.21
3632	ok	1.20
3633	ok	1.23
3634	ok	1.22
3635	ok	1.16
3636	ok	1.14
3637	ok	1.16
3638	ok	1.17
3639	ok	1.19
3640	ok	1.21
3641	ok	1.20
3642	ok	1.22
3643	ok	1.20
3644	ok	1.22
3645	ok	1.21
3646	ok	1.21
3647	ok	1.12
3648	ok	1.11
3649	ok	1.13
3650	ok	1.14
3651	ok	1.15
3652	ok	1.17
3653	ok	1.15
3654	ok	1.17
3655	ok	1.14
3656	ok	1.15
3657	ok	1.11
3658	ok	1.13
3659	ok	0.81
3660	ok	0.77
3661	ok	0.75
3662	ok	0.77
3663	ok	0.75
3664	ok	0.77
3665	ok	0.76
3666	ok	0.78
3667	ok	0.73
3668	ok	0.76
3669	ok	0.74
3670	ok	0.76
3671	ok	0.76
3672	ok	0.78
3673	ok	0.76
3674	ok	0.78
3675	ok	0.77
3676	ok	0.79

3677	ok	0.77
3678	ok	0.79
3679	ok	0.73
3680	ok	0.76
3681	ok	0.74
3682	ok	0.76
3683	ok	0.75
3684	ok	0.77
3685	ok	0.76
3686	ok	0.77
3687	ok	0.76
3688	ok	0.78
3689	ok	0.75
3690	ok	0.78
3691	ok	0.76
3692	ok	0.77
3693	ok	0.74
3694	ok	0.75
3695	ok	0.72
3696	ok	0.77
3697	ok	0.75
3698	ok	0.76
3699	ok	0.75
3700	ok	0.76
3701	ok	0.74
3702	ok	0.76
3703	ok	0.74
3704	ok	0.75
3705	ok	0.73
3706	ok	0.74
3707	ok	0.72
3708	ok	0.75
3709	ok	0.71
3710	ok	0.75
3711	ok	0.71
3712	ok	0.73
3713	ok	0.71
3714	ok	0.75
3715	ok	0.78
3716	ok	0.48
3717	ok	0.53
3718	ok	0.44
3719	ok	0.56
3720	ok	0.44
3721	ok	0.57
3722	ok	0.45
3723	ok	0.57
3724	ok	0.46
3725	ok	0.58
3726	ok	0.43
3727	ok	0.55
3728	ok	0.45
3729	ok	0.57
3730	ok	0.45
3731	ok	0.57
3732	ok	0.45
3733	ok	0.57
3734	ok	0.45
3735	ok	0.56
3736	ok	0.45
3737	ok	0.57
3738	ok	0.43
3739	ok	0.54
3740	ok	0.44
3741	ok	0.55
3742	ok	0.44
3743	ok	0.55
3744	ok	0.44
3745	ok	0.55
3746	ok	0.45
3747	ok	0.55
3748	ok	0.45
3749	ok	0.54
3750	ok	0.43
3751	ok	0.54
3752	ok	0.38
3753	ok	0.53
3754	ok	0.39
3755	ok	0.53

3756	ok	0.40
3757	ok	0.54
3758	ok	0.40
3759	ok	0.54
3760	ok	0.39
3761	ok	0.55
3762	ok	0.44
3763	ok	0.56
3764	ok	0.39
3765	ok	0.56
3766	ok	0.44
3767	ok	0.56
3768	ok	0.43
3769	ok	0.54
3770	ok	0.41
3771	ok	0.53
3772	ok	0.48
3773	ok	0.35
3774	ok	0.34
3775	ok	0.32
3776	ok	0.36
3777	ok	0.37
3778	ok	0.36
3779	ok	0.37
3780	ok	0.36
3781	ok	0.37
3782	ok	0.37
3783	ok	0.37
3784	ok	0.36
3785	ok	0.36
3786	ok	0.37
3787	ok	0.35
3788	ok	0.37
3789	ok	0.35
3790	ok	0.37
3791	ok	0.36
3792	ok	0.37
3793	ok	0.36
3794	ok	0.38
3795	ok	0.36
3796	ok	0.37
3797	ok	0.35
3798	ok	0.38
3799	ok	0.36
3800	ok	0.37
3801	ok	0.37
3802	ok	0.37
3803	ok	0.36
3804	ok	0.37
3805	ok	0.36
3806	ok	0.37
3807	ok	0.39
3808	ok	0.38
3809	ok	0.40
3810	ok	0.37
3811	ok	0.41
3812	ok	0.37
3813	ok	0.41
3814	ok	0.37
3815	ok	0.41
3816	ok	0.37
3817	ok	0.41
3818	ok	0.36
3819	ok	0.38
3820	ok	0.36
3821	ok	0.39
3822	ok	0.37
3823	ok	0.37
3824	ok	0.35
3825	ok	0.37
3826	ok	0.35
3827	ok	0.31
3828	ok	0.34
3829	ok	0.35

Nodo	**Max tau**	**Ver V pr**	**Ver V sec**	**Af V pr**	**Af V sec**	**V pr**	**V sec**
	2.14						

Macro Guscio	Spessore	Id Materiale	Id Criterio	Progettazione
	cm			
36	20.00	1	3	Singolo elemento

Nodo	Stato	x/d	V N/M	ver. rid	Af pr-	Af pr+	Af sec-	Af sec+	N x	N y	N xy	M x	M y	M xy
									kN/ m	kN/ m	kN/ m	kN	kN	kN
4076	ok	0.18	0.1	1.44e-03	6.2	6.2	6.2	6.2	1.7	-3.1	-0.4	1.6	-4.4	-1.6
4077	ok	0.18	0.2	1.62e-03	6.2	6.2	6.2	6.2	2.4	-6.68e-02	4.6	6.2	4.2	-2.3
4078	ok	0.18	0.2	1.36e-04	6.2	6.2	6.2	6.2	18.2	3.7	3.8	-3.7	-2.2	-2.0
4079	ok	0.18	0.2	7.53e-04	6.2	6.2	6.2	6.2	5.7	-1.1	-1.8	-7.3	-0.2	-0.5
4080	ok	0.18	0.3	1.25e-03	6.2	6.2	6.2	6.2	11.7	9.12e-02	-0.2	-7.2	0.2	-1.0
4081	ok	0.18	0.3	2.55e-03	6.2	6.2	6.2	6.2	11.0	0.1	-0.2	-8.0	0.1	-0.3
4082	ok	0.18	0.3	3.84e-03	6.2	6.2	6.2	6.2	21.9	0.5	-1.2	-7.3	-0.2	0.9
4083	ok	0.18	0.2	4.84e-03	6.2	6.2	6.2	6.2	10.4	0.2	0.2	-6.3	0.1	1.1
4084	ok	0.18	0.2	5.60e-03	6.2	6.2	6.2	6.2	10.3	0.4	0.2	-3.6	0.1	1.6
4085	ok	0.18	0.2	7.01e-03	6.2	6.2	6.2	6.2	38.1	1.6	-2.0	4.6	0.6	1.7
4086	ok	0.18	0.4	8.40e-03	6.2	6.2	6.2	6.2	22.1	2.6	-1.0	11.7	3.5	-0.8
4087	ok	0.18	0.5	6.81e-03	6.2	6.2	6.2	6.2	12.5	-0.8	6.8	19.2	-2.4	-0.8
4088	ok	0.18	0.3	7.39e-03	6.2	6.2	6.2	6.2	-5.5	-0.7	1.4	9.0	2.6	9.04e-02
4089	ok	0.18	0.2	8.40e-03	6.2	6.2	6.2	6.2	-8.6	-2.1	-4.0	3.9	0.5	-1.2
4090	ok	0.18	0.2	6.40e-03	6.2	6.2	6.2	6.2	19.3	0.2	-0.3	-3.8	0.1	-1.9
4091	ok	0.18	0.3	6.17e-03	6.2	6.2	6.2	6.2	18.9	0.2	-0.2	-6.4	0.1	-1.4
4092	ok	0.18	0.3	5.91e-03	6.2	6.2	6.2	6.2	18.7	0.1	-0.2	-7.7	0.1	-0.7
4093	ok	0.18	0.3	5.55e-03	6.2	6.2	6.2	6.2	18.6	0.1	0.2	-8.1	0.1	9.78e-02
4094	ok	0.18	0.3	5.04e-03	6.2	6.2	6.2	6.2	18.6	0.1	0.2	-7.6	0.1	0.8
4095	ok	0.18	0.2	4.46e-03	6.2	6.2	6.2	6.2	18.7	0.2	0.2	-6.1	0.1	1.4
4096	ok	0.18	0.2	3.74e-03	6.2	6.2	6.2	6.2	18.8	0.2	0.3	-3.4	0.1	1.9
4097	ok	0.18	0.2	2.97e-03	6.2	6.2	6.2	6.2	34.7	-0.8	1.5	5.0	0.6	1.9
4098	ok	0.18	0.4	2.52e-03	6.2	6.2	6.2	6.2	23.4	3.8	1.4	11.4	3.4	-0.6
4099	ok	0.18	0.5	2.08e-03	6.2	6.2	6.2	6.2	21.0	-1.3	0.2	16.0	-4.8	1.5
4100	ok	0.18	0.3	1.62e-03	6.2	6.2	6.2	6.2	3.9	1.1	-1.3	11.3	3.3	0.6
4101	ok	0.18	0.2	2.65e-03	6.2	6.2	6.2	6.2	14.2	-1.5	-3.6	4.7	0.5	-1.3
4102	ok	0.18	0.2	2.63e-04	6.2	6.2	6.2	6.2	19.8	0.2	-0.3	-3.4	0.1	-1.9
4103	ok	0.18	0.2	1.82e-04	6.2	6.2	6.2	6.2	19.7	0.2	-0.2	-6.1	0.1	-1.4
4104	ok	0.18	0.3	1.84e-04	6.2	6.2	6.2	6.2	19.6	0.1	-0.2	-7.6	0.1	-0.8
4105	ok	0.18	0.3	1.94e-04	6.2	6.2	6.2	6.2	19.5	0.1	-0.2	-8.0	0.1	-7.75e-02
4106	ok	0.18	0.3	1.88e-04	6.2	6.2	6.2	6.2	19.6	0.1	0.2	-7.6	0.1	0.7
4107	ok	0.18	0.2	1.85e-04	6.2	6.2	6.2	6.2	19.8	0.2	0.2	-6.1	0.1	1.4
4108	ok	0.18	0.2	2.51e-04	6.2	6.2	6.2	6.2	19.9	0.2	0.3	-3.5	0.1	1.9
4109	ok	0.18	0.2	2.47e-03	6.2	6.2	6.2	6.2	-0.4	-1.3	4.4	5.0	0.6	1.9
4110	ok	0.18	0.3	1.54e-03	6.2	6.2	6.2	6.2	3.9	1.1	1.3	11.2	3.3	-0.7
4111	ok	0.18	0.5	2.00e-03	6.2	6.2	6.2	6.2	2.0	-0.6	-1.2	16.1	-4.7	1.6
4112	ok	0.18	0.4	2.48e-03	6.2	6.2	6.2	6.2	23.1	3.8	-1.3	11.5	3.4	0.6
4113	ok	0.18	0.2	2.92e-03	6.2	6.2	6.2	6.2	30.2	-0.5	-1.8	4.8	0.6	-1.3
4114	ok	0.18	0.2	3.71e-03	6.2	6.2	6.2	6.2	18.6	0.2	-0.3	-3.4	0.1	-1.9
4115	ok	0.18	0.2	4.42e-03	6.2	6.2	6.2	6.2	18.5	0.2	-0.2	-6.1	0.1	-1.4
4116	ok	0.18	0.3	5.00e-03	6.2	6.2	6.2	6.2	18.4	0.1	-0.2	-7.6	0.1	-0.8
4117	ok	0.18	0.3	5.50e-03	6.2	6.2	6.2	6.2	18.5	0.1	-0.2	-8.1	0.1	-0.1
4118	ok	0.18	0.3	5.85e-03	6.2	6.2	6.2	6.2	18.6	0.1	0.2	-7.7	0.1	0.7
4119	ok	0.18	0.3	6.10e-03	6.2	6.2	6.2	6.2	18.9	0.2	0.2	-6.4	0.1	1.4
4120	ok	0.18	0.2	6.32e-03	6.2	6.2	6.2	6.2	19.3	0.2	0.3	-3.9	0.1	1.9
4121	ok	0.18	0.2	8.31e-03	6.2	6.2	6.2	6.2	-24.7	-3.0	4.6	4.4	0.5	1.8
4122	ok	0.18	0.3	7.25e-03	6.2	6.2	6.2	6.2	-5.7	0.5	2.4	9.6	3.1	-0.6
4123	ok	0.18	0.5	6.73e-03	6.2	6.2	6.2	6.2	12.7	-0.8	-6.9	19.2	-2.4	0.8
4124	ok	0.18	0.4	8.33e-03	6.2	6.2	6.2	6.2	25.0	3.1	0.6	10.0	2.8	0.7
4125	ok	0.18	0.2	6.93e-03	6.2	6.2	6.2	6.2	27.9	1.4	0.8	4.6	0.6	-1.1
4126	ok	0.18	0.2	5.53e-03	6.2	6.2	6.2	6.2	10.4	0.4	-0.2	-3.6	0.1	-1.6
4127	ok	0.18	0.2	4.77e-03	6.2	6.2	6.2	6.2	23.8	0.5	0.9	-5.9	-0.1	-1.5
4128	ok	0.18	0.3	3.78e-03	6.2	6.2	6.2	6.2	21.8	0.5	1.2	-7.3	-0.2	-0.9
4129	ok	0.18	0.3	2.51e-03	6.2	6.2	6.2	6.2	11.1	0.1	0.2	-8.0	0.1	0.3
4130	ok	0.18	0.2	1.22e-03	6.2	6.2	6.2	6.2	11.8	8.78e-02	0.2	-7.3	0.2	1.0
4131	ok	0.18	0.2	7.63e-04	6.2	6.2	6.2	6.2	5.7	-1.1	1.8	-7.3	-0.2	0.5
4132	ok	0.18	0.2	1.26e-04	6.2	6.2	6.2	6.2	20.5	4.5	-3.2	-5.0	-0.9	1.4
4133	ok	0.18	0.2	1.63e-03	6.2	6.2	6.2	6.2	2.5	-6.51e-02	-4.6	6.1	4.1	2.3
4134	ok	0.18	0.1	1.45e-03	6.2	6.2	6.2	6.2	1.8	-3.1	0.4	1.6	-4.4	1.6
4135	ok	0.18	0.3	1.53e-03	6.2	6.2	6.2	6.2	-1.1	-1.3	-0.8	2.4	7.5	-3.5
4136	ok	0.18	0.5	6.14e-03	6.2	6.2	6.2	6.2	8.5	-6.5	3.6	12.2	11.6	2.3
4137	ok	0.18	0.3	1.25e-03	6.2	6.2	6.2	6.2	10.8	-0.5	3.9	-7.6	-2.2	-3.8
4138	ok	0.18	0.2	2.42e-03	6.2	6.2	6.2	6.2	11.1	0.3	2.5	-5.1	-0.7	-2.7
4139	ok	0.18	0.2	2.83e-03	6.2	6.2	6.2	6.2	9.3	0.3	0.5	-6.8	-1.1	-1.8
4140	ok	0.18	0.2	3.38e-03	6.2	6.2	6.2	6.2	8.9	0.2	0.6	-7.5	-1.2	-0.6
4141	ok	0.18	0.2	4.00e-03	6.2	6.2	6.2	6.2	18.7	1.6	-3.1	-6.8	-1.7	1.2
4142	ok	0.18	0.2	4.65e-03	6.2	6.2	6.2	6.2	20.3	1.6	-2.6	-5.5	-1.5	2.1
4143	ok	0.18	0.2	5.31e-03	6.2	6.2	6.2	6.2	8.1	-0.3	0.5	-3.4	-0.8	3.0
4144	ok	0.18	0.2	5.55e-03	6.2	6.2	6.2	6.2	21.8	3.0	0.5	1.7	0.5	2.9

4145	ok	0.18	0.4	6.01e-03	6.2	6.2	6.2	6.2	29.7	2.4	-3.0	11.0	2.3	2.5
4146	ok	0.18	0.8	7.31e-03	6.2	6.2	6.2	6.2	17.9	-4.0	7.0	27.0	18.2	-3.9
4147	ok	0.18	0.3	6.47e-03	6.2	6.2	6.2	6.2	-5.6	-1.9	0.3	10.7	2.4	-1.3
4148	ok	0.18	0.2	5.78e-03	6.2	6.2	6.2	6.2	-16.7	-2.0	-0.6	1.8	0.4	-3.2
4149	ok	0.18	0.2	5.76e-03	6.2	6.2	6.2	6.2	16.1	0.1	0.2	-3.6	-0.8	-3.6
4150	ok	0.18	0.2	5.46e-03	6.2	6.2	6.2	6.2	15.9	0.2	0.4	-5.9	-1.1	-2.6
4151	ok	0.18	0.3	5.17e-03	6.2	6.2	6.2	6.2	15.8	0.2	0.4	-7.2	-1.2	-1.4
4152	ok	0.18	0.3	4.83e-03	6.2	6.2	6.2	6.2	32.9	2.0	1.0	-6.7	-1.7	0.8
4153	ok	0.18	0.3	4.41e-03	6.2	6.2	6.2	6.2	15.7	0.2	-0.3	-7.1	-1.2	1.5
4154	ok	0.18	0.2	3.93e-03	6.2	6.2	6.2	6.2	15.6	0.1	-0.3	-5.7	-1.1	2.7
4155	ok	0.18	0.2	3.37e-03	6.2	6.2	6.2	6.2	15.5	-6.01e-02	0.1	-3.2	-0.8	3.6
4156	ok	0.18	0.2	2.81e-03	6.2	6.2	6.2	6.2	31.8	-9.54e-02	1.2	2.0	-0.1	3.8
4157	ok	0.18	0.4	2.61e-03	6.2	6.2	6.2	6.2	26.0	-0.3	1.2	11.8	2.3	2.7
4158	ok	0.18	0.8	3.00e-03	6.2	6.2	6.2	6.2	22.9	-3.3	5.2	25.9	17.9	-2.8
4159	ok	0.18	0.4	2.24e-03	6.2	6.2	6.2	6.2	11.6	-1.4	1.2	11.9	5.2	0.4
4160	ok	0.18	0.2	1.51e-03	6.2	6.2	6.2	6.2	3.8	-1.0	-4.2	2.2	0.5	-3.2
4161	ok	0.18	0.2	1.32e-03	6.2	6.2	6.2	6.2	16.4	-2.11e-02	-7.90e-02	-3.2	-0.8	-3.6
4162	ok	0.18	0.2	8.18e-04	6.2	6.2	6.2	6.2	16.4	0.2	0.3	-5.7	-1.1	-2.7
4163	ok	0.18	0.2	5.92e-04	6.2	6.2	6.2	6.2	16.5	0.2	0.3	-7.1	-1.2	-1.4
4164	ok	0.18	0.2	5.65e-04	6.2	6.2	6.2	6.2	19.3	1.7	-2.2	-6.8	-1.7	-0.6
4165	ok	0.18	0.2	5.73e-04	6.2	6.2	6.2	6.2	16.5	0.2	-0.3	-7.1	-1.2	1.4
4166	ok	0.18	0.2	7.93e-04	6.2	6.2	6.2	6.2	16.5	0.1	-0.3	-5.7	-1.1	2.6
4167	ok	0.18	0.2	1.28e-03	6.2	6.2	6.2	6.2	16.5	-2.14e-02	6.54e-02	-3.2	-0.8	3.6
4168	ok	0.18	0.2	1.47e-03	6.2	6.2	6.2	6.2	4.1	0.4	1.3	2.1	-0.1	3.8
4169	ok	0.18	0.4	2.20e-03	6.2	6.2	6.2	6.2	-0.8	-4.3	1.2	11.9	2.3	2.6
4170	ok	0.18	0.8	3.00e-03	6.2	6.2	6.2	6.2	22.5	-3.3	-5.2	26.0	17.9	2.8
4171	ok	0.18	0.4	2.53e-03	6.2	6.2	6.2	6.2	23.6	1.5	0.2	12.0	5.3	0.5
4172	ok	0.18	0.2	2.75e-03	6.2	6.2	6.2	6.2	32.0	0.7	-1.3	2.1	0.5	-3.2
4173	ok	0.18	0.2	3.32e-03	6.2	6.2	6.2	6.2	15.4	-5.97e-02	-0.1	-3.1	-0.8	-3.7
4174	ok	0.18	0.2	3.88e-03	6.2	6.2	6.2	6.2	15.5	0.1	0.3	-5.7	-1.1	-2.7
4175	ok	0.18	0.3	4.36e-03	6.2	6.2	6.2	6.2	15.6	0.2	0.3	-7.1	-1.2	-1.5
4176	ok	0.18	0.3	4.77e-03	6.2	6.2	6.2	6.2	33.3	2.2	-0.5	-6.9	-1.7	-0.7
4177	ok	0.18	0.3	5.11e-03	6.2	6.2	6.2	6.2	15.8	0.2	-0.4	-7.2	-1.2	1.3
4178	ok	0.18	0.2	5.40e-03	6.2	6.2	6.2	6.2	15.9	0.2	-0.5	-5.9	-1.1	2.6
4179	ok	0.18	0.2	5.69e-03	6.2	6.2	6.2	6.2	16.2	0.1	-0.2	-3.6	-0.8	3.6
4180	ok	0.18	0.2	5.69e-03	6.2	6.2	6.2	6.2	-3.5	1.7	0.8	1.4	0.4	3.3
4181	ok	0.18	0.3	6.39e-03	6.2	6.2	6.2	6.2	-17.9	-4.7	-1.0	11.2	2.1	2.4
4182	ok	0.18	0.8	7.27e-03	6.2	6.2	6.2	6.2	17.6	-4.0	-7.0	27.1	18.2	4.0
4183	ok	0.18	0.4	5.96e-03	6.2	6.2	6.2	6.2	22.1	2.1	2.1	11.2	2.8	-1.2
4184	ok	0.18	0.2	5.48e-03	6.2	6.2	6.2	6.2	28.8	-2.85e-02	2.5	1.7	0.4	-2.7
4185	ok	0.18	0.2	5.25e-03	6.2	6.2	6.2	6.2	8.2	-0.3	-0.5	-3.4	-0.8	-3.0
4186	ok	0.18	0.2	4.58e-03	6.2	6.2	6.2	6.2	20.2	1.6	2.5	-5.5	-1.5	-2.1
4187	ok	0.18	0.2	3.95e-03	6.2	6.2	6.2	6.2	18.6	1.6	3.1	-6.8	-1.7	-1.2
4188	ok	0.18	0.2	3.34e-03	6.2	6.2	6.2	6.2	9.0	0.2	-0.6	-7.5	-1.2	0.6
4189	ok	0.18	0.2	2.80e-03	6.2	6.2	6.2	6.2	9.4	0.3	-0.5	-6.8	-1.1	1.8
4190	ok	0.18	0.2	2.40e-03	6.2	6.2	6.2	6.2	11.2	0.4	-2.5	-5.1	-0.7	2.7
4191	ok	0.18	0.3	1.24e-03	6.2	6.2	6.2	6.2	10.5	2.1	1.4	-9.6	-1.5	2.3
4192	ok	0.18	0.5	6.17e-03	6.2	6.2	6.2	6.2	8.5	-6.5	-3.6	12.1	11.5	-2.3
4193	ok	0.18	0.3	1.54e-03	6.2	6.2	6.2	6.2	-1.1	-1.3	0.8	2.3	7.5	3.5
4194	ok	0.18	0.1	3.71e-03	6.2	6.2	6.2	6.2	0.8	-2.8	-1.2	-1.6	-3.2	-1.5
4195	ok	0.18	0.3	3.87e-03	6.2	6.2	6.2	6.2	3.9	-1.9	-4.7	2.5	7.8	-2.4
4196	ok	0.18	0.2	4.27e-03	6.2	6.2	6.2	6.2	8.1	6.3	-5.3	-3.4	-0.8	-3.3
4197	ok	0.18	0.2	4.27e-03	6.2	6.2	6.2	6.2	7.5	6.0	-5.4	-5.5	-2.6	-2.4
4198	ok	0.18	0.2	4.27e-03	6.2	6.2	6.2	6.2	10.4	4.4	-5.8	-6.2	-3.3	-1.3
4199	ok	0.18	0.2	4.10e-03	6.2	6.2	6.2	6.2	12.7	3.0	-5.5	-6.2	-3.5	-3.26e-02
4200	ok	0.18	0.2	4.33e-03	6.2	6.2	6.2	6.2	14.6	2.7	-5.0	-5.7	-3.5	1.0
4201	ok	0.18	0.2	4.58e-03	6.2	6.2	6.2	6.2	15.9	2.4	-4.1	-4.6	-3.3	2.1
4202	ok	0.18	0.2	4.75e-03	6.2	6.2	6.2	6.2	17.2	2.0	-3.0	-2.5	-3.0	2.9
4203	ok	0.18	0.2	5.01e-03	6.2	6.2	6.2	6.2	19.5	1.8	-0.6	1.9	-2.0	3.6
4204	ok	0.18	0.3	5.32e-03	6.2	6.2	6.2	6.2	17.6	0.3	3.3	8.7	2.0	3.6
4205	ok	0.18	0.4	5.54e-03	6.2	6.2	6.2	6.2	-4.6	-0.2	-1.5	11.1	3.3	-0.9
4206	ok	0.18	0.3	4.47e-03	6.2	6.2	6.2	6.2	-2.9	0.1	0.3	7.5	1.8	-4.4
4207	ok	0.18	0.2	4.53e-03	6.2	6.2	6.2	6.2	-2.6	1.0	-1.0	0.2	-2.1	-3.9
4208	ok	0.18	0.2	4.53e-03	6.2	6.2	6.2	6.2	26.3	3.7	-1.4	-3.2	-2.9	-2.5
4209	ok	0.18	0.2	4.44e-03	6.2	6.2	6.2	6.2	-1.7	2.5	-0.7	-4.2	-3.0	-2.5
4210	ok	0.18	0.2	4.26e-03	6.2	6.2	6.2	6.2	-1.0	2.5	-0.6	-5.2	-3.1	-1.6
4211	ok	0.18	0.2	3.98e-03	6.2	6.2	6.2	6.2	25.4	3.1	1.2	-5.5	-3.3	0.8
4212	ok	0.18	0.2	3.57e-03	6.2	6.2	6.2	6.2	25.3	3.1	0.9	-5.3	-3.3	1.7
4213	ok	0.18	0.2	3.22e-03	6.2	6.2	6.2	6.2	24.4	3.0	1.8	-4.2	-3.1	2.6
4214	ok	0.18	0.2	2.85e-03	6.2	6.2	6.2	6.2	23.4	2.7	2.4	-2.2	-2.7	3.4
4215	ok	0.18	0.2	2.47e-03	6.2	6.2	6.2	6.2	21.5	2.8	3.4	2.2	-1.8	4.0
4216	ok	0.18	0.3	2.15e-03	6.2	6.2	6.2	6.2	17.0	-1.5	3.9	8.7	2.0	4.2
4217	ok	0.18	0.4	1.94e-03	6.2	6.2	6.2	6.2	18.9	-1.3	0.5	10.7	3.5	0.7
4218	ok	0.18	0.3	2.24e-03	6.2	6.2	6.2	6.2	7.0	-1.1	-3.3	8.5	2.0	-4.2
4219	ok	0.18	0.2	2.19e-03	6.2	6.2	6.2	6.2	9.6	1.2	-5.0	0.6	-2.1	-3.9
4220	ok	0.18	0.2	1.92e-03	6.2	6.2	6.2	6.2	10.6	2.0	-4.5	-2.2	-2.7	-3.3
4221	ok	0.18	0.2	1.63e-03	6.2	6.2	6.2	6.2	11.9	2.5	-4.2	-4.1	-3.0	-2.6
4222	ok	0.18	0.2	1.37e-03	6.2	6.2	6.2	6.2	13.4	2.7	-3.9	-5.2	-3.2	-1.6
4223	ok	0.18	0.2	1.16e-03	6.2	6.2	6.2	6.2	14.8	2.8	-3.7	-5.6	-3.3	-0.6

4224	ok	0.18	0.2	1.34e-03	6.2	6.2	6.2	6.2	13.5	2.7	4.0	-5.2	-3.2	1.6
4225	ok	0.18	0.2	1.60e-03	6.2	6.2	6.2	6.2	12.0	2.5	4.3	-4.1	-3.0	2.6
4226	ok	0.18	0.2	1.89e-03	6.2	6.2	6.2	6.2	10.6	2.0	4.6	-2.2	-2.7	3.3
4227	ok	0.18	0.2	2.17e-03	6.2	6.2	6.2	6.2	8.9	1.6	4.5	2.2	-1.8	3.9
4228	ok	0.18	0.3	2.23e-03	6.2	6.2	6.2	6.2	7.1	-1.1	3.3	8.5	2.0	4.2
4229	ok	0.18	0.4	1.92e-03	6.2	6.2	6.2	6.2	18.8	-1.3	-0.5	10.6	3.5	-0.7
4230	ok	0.18	0.3	2.13e-03	6.2	6.2	6.2	6.2	16.8	-1.5	-3.8	8.7	2.0	-4.2
4231	ok	0.18	0.2	2.42e-03	6.2	6.2	6.2	6.2	22.1	2.2	-3.0	0.6	-2.2	-4.0
4232	ok	0.18	0.2	2.79e-03	6.2	6.2	6.2	6.2	23.1	2.7	-2.3	-2.2	-2.7	-3.4
4233	ok	0.18	0.2	3.16e-03	6.2	6.2	6.2	6.2	24.1	3.0	-1.8	-4.2	-3.1	-2.6
4234	ok	0.18	0.2	3.51e-03	6.2	6.2	6.2	6.2	25.0	3.1	-0.9	-5.3	-3.3	-1.7
4235	ok	0.18	0.2	3.93e-03	6.2	6.2	6.2	6.2	25.7	3.2	0.3	-5.7	-3.4	-0.6
4236	ok	0.18	0.2	4.20e-03	6.2	6.2	6.2	6.2	-1.1	2.5	0.5	-5.2	-3.1	1.6
4237	ok	0.18	0.2	4.38e-03	6.2	6.2	6.2	6.2	-1.9	2.5	0.6	-4.2	-3.0	2.5
4238	ok	0.18	0.2	4.46e-03	6.2	6.2	6.2	6.2	26.0	3.7	1.3	-3.2	-2.9	2.5
4239	ok	0.18	0.2	4.46e-03	6.2	6.2	6.2	6.2	-3.2	2.7	0.8	1.7	-1.8	3.9
4240	ok	0.18	0.3	4.42e-03	6.2	6.2	6.2	6.2	-3.1	0.1	-0.4	7.4	1.8	4.4
4241	ok	0.18	0.4	5.49e-03	6.2	6.2	6.2	6.2	-4.7	-0.1	1.5	11.1	3.3	0.9
4242	ok	0.18	0.3	5.24e-03	6.2	6.2	6.2	6.2	17.4	-2.4	-3.3	8.8	2.0	-3.6
4243	ok	0.18	0.2	4.94e-03	6.2	6.2	6.2	6.2	18.1	1.2	1.5	0.3	-2.3	-3.6
4244	ok	0.18	0.2	4.69e-03	6.2	6.2	6.2	6.2	17.0	2.0	2.9	-2.5	-3.0	-2.9
4245	ok	0.18	0.2	4.52e-03	6.2	6.2	6.2	6.2	15.8	2.4	4.0	-4.6	-3.3	-2.1
4246	ok	0.18	0.2	4.28e-03	6.2	6.2	6.2	6.2	14.5	2.7	4.9	-5.7	-3.5	-1.1
4247	ok	0.18	0.2	4.05e-03	6.2	6.2	6.2	6.2	12.6	3.0	5.4	-6.2	-3.5	2.63e-02
4248	ok	0.18	0.2	4.22e-03	6.2	6.2	6.2	6.2	10.4	4.4	5.8	-6.2	-3.3	1.3
4249	ok	0.18	0.2	4.23e-03	6.2	6.2	6.2	6.2	7.5	5.9	5.3	-5.5	-2.6	2.4
4250	ok	0.18	0.2	4.25e-03	6.2	6.2	6.2	6.2	8.1	6.2	5.2	-3.4	-0.8	3.3
4251	ok	0.18	0.3	3.86e-03	6.2	6.2	6.2	6.2	3.9	-1.9	4.7	2.5	7.8	2.4
4252	ok	0.18	0.1	3.73e-03	6.2	6.2	6.2	6.2	0.8	-2.9	1.2	-1.6	-3.2	1.6
4253	ok	0.18	0.3	5.90e-03	6.2	6.2	6.2	6.2	1.2	7.1	-2.5	-0.8	-7.5	-3.2
4254	ok	0.18	0.2	6.54e-03	6.2	6.2	6.2	6.2	0.7	10.2	-2.5	-0.7	-5.6	-4.4
4255	ok	0.18	0.2	6.31e-03	6.2	6.2	6.2	6.2	4.9	10.3	-9.3	-2.9	-5.9	-3.4
4256	ok	0.18	0.2	5.45e-03	6.2	6.2	6.2	6.2	4.4	6.7	-9.3	-3.8	-5.2	-3.0
4257	ok	0.18	0.2	5.08e-03	6.2	6.2	6.2	6.2	7.6	5.6	-8.4	-4.7	-4.8	-1.5
4258	ok	0.18	0.2	4.56e-03	6.2	6.2	6.2	6.2	9.7	4.0	-7.4	-4.8	-4.7	-0.3
4259	ok	0.18	0.2	4.52e-03	6.2	6.2	6.2	6.2	11.1	3.5	-6.4	-4.4	-4.6	0.9
4260	ok	0.18	0.2	4.42e-03	6.2	6.2	6.2	6.2	12.3	3.0	-5.4	-3.6	-4.6	1.9
4261	ok	0.18	0.2	4.33e-03	6.2	6.2	6.2	6.2	13.2	2.5	-4.3	-2.0	-4.7	2.7
4262	ok	0.18	0.2	4.21e-03	6.2	6.2	6.2	6.2	14.6	1.8	-1.6	0.3	-5.2	3.2
4263	ok	0.18	0.2	3.96e-03	6.2	6.2	6.2	6.2	15.7	2.2	-1.8	2.4	-6.1	2.5
4264	ok	0.18	0.2	4.12e-03	6.2	6.2	6.2	6.2	7.3	-2.4	-0.2	5.3	-3.9	-0.4
4265	ok	0.18	0.2	3.81e-03	6.2	6.2	6.2	6.2	10.2	4.9	-1.6	2.1	-5.9	-2.9
4266	ok	0.18	0.2	3.69e-03	6.2	6.2	6.2	6.2	18.8	3.6	-1.6	-0.9	-4.9	-2.9
4267	ok	0.18	0.2	3.69e-03	6.2	6.2	6.2	6.2	10.8	4.2	7.74e-02	-2.2	-4.5	-2.6
4268	ok	0.18	0.2	3.59e-03	6.2	6.2	6.2	6.2	-1.4	3.6	-0.9	-3.2	-4.0	-2.4
4269	ok	0.18	0.2	3.46e-03	6.2	6.2	6.2	6.2	-0.9	3.6	-0.8	-4.0	-4.0	-1.5
4270	ok	0.18	0.2	3.30e-03	6.2	6.2	6.2	6.2	18.5	3.8	0.7	-4.2	-4.1	0.8
4271	ok	0.18	0.2	3.10e-03	6.2	6.2	6.2	6.2	18.5	3.7	0.5	-4.0	-4.2	1.6
4272	ok	0.18	0.2	2.96e-03	6.2	6.2	6.2	6.2	17.9	3.8	0.9	-3.2	-4.3	2.5
4273	ok	0.18	0.2	2.74e-03	6.2	6.2	6.2	6.2	17.1	3.5	1.3	-1.7	-4.4	3.2
4274	ok	0.18	0.2	2.51e-03	6.2	6.2	6.2	6.2	16.6	2.8	1.7	0.5	-5.0	3.5
4275	ok	0.18	0.2	2.55e-03	6.2	6.2	6.2	6.2	16.3	3.1	2.3	2.5	-5.8	2.9
4276	ok	0.18	0.2	2.95e-03	6.2	6.2	6.2	6.2	14.7	1.1	1.3	4.5	-5.0	0.3
4277	ok	0.18	0.2	2.61e-03	6.2	6.2	6.2	6.2	6.6	2.6	-2.6	2.5	-5.6	-2.8
4278	ok	0.18	0.2	2.11e-03	6.2	6.2	6.2	6.2	6.7	2.8	-2.1	0.5	-4.8	-3.5
4279	ok	0.18	0.2	2.05e-03	6.2	6.2	6.2	6.2	7.4	3.1	-3.7	-1.7	-4.3	-3.1
4280	ok	0.18	0.2	2.02e-03	6.2	6.2	6.2	6.2	8.4	3.4	-5.4	-3.2	-4.1	-2.5
4281	ok	0.18	0.2	2.04e-03	6.2	6.2	6.2	6.2	9.5	3.6	-5.1	-4.0	-4.0	-1.6
4282	ok	0.18	0.1	1.91e-03	6.2	6.2	6.2	6.2	10.6	3.8	-4.9	-4.3	-4.1	-0.6
4283	ok	0.18	0.2	2.08e-03	6.2	6.2	6.2	6.2	9.6	3.6	5.3	-4.0	-4.0	1.6
4284	ok	0.18	0.2	2.08e-03	6.2	6.2	6.2	6.2	8.5	3.4	5.5	-3.2	-4.1	2.5
4285	ok	0.18	0.2	2.09e-03	6.2	6.2	6.2	6.2	7.5	3.1	3.8	-1.7	-4.3	3.1
4286	ok	0.18	0.2	2.12e-03	6.2	6.2	6.2	6.2	5.9	2.5	2.9	0.4	-4.7	3.5
4287	ok	0.18	0.2	2.63e-03	6.2	6.2	6.2	6.2	6.6	2.6	2.7	2.5	-5.6	2.8
4288	ok	0.18	0.2	2.96e-03	6.2	6.2	6.2	6.2	14.6	1.1	-1.3	4.5	-5.0	-0.3
4289	ok	0.18	0.2	2.54e-03	6.2	6.2	6.2	6.2	16.1	3.1	-2.2	2.5	-5.8	-2.9
4290	ok	0.18	0.2	2.46e-03	6.2	6.2	6.2	6.2	16.4	2.8	-1.7	0.5	-5.0	-3.6
4291	ok	0.18	0.2	2.70e-03	6.2	6.2	6.2	6.2	16.9	3.5	-1.2	-1.7	-4.4	-3.2
4292	ok	0.18	0.2	2.91e-03	6.2	6.2	6.2	6.2	17.7	3.8	-0.8	-3.2	-4.3	-2.5
4293	ok	0.18	0.2	3.05e-03	6.2	6.2	6.2	6.2	18.3	3.7	-0.5	-4.0	-4.2	-1.6
4294	ok	0.18	0.2	3.24e-03	6.2	6.2	6.2	6.2	18.8	3.8	-0.2	-4.4	-4.2	-0.7
4295	ok	0.18	0.2	3.40e-03	6.2	6.2	6.2	6.2	-0.9	3.6	0.8	-4.0	-4.0	1.5
4296	ok	0.18	0.2	3.53e-03	6.2	6.2	6.2	6.2	-1.6	3.6	0.9	-3.2	-4.0	2.4
4297	ok	0.18	0.2	3.62e-03	6.2	6.2	6.2	6.2	10.6	4.2	-0.2	-2.2	-4.4	2.6
4298	ok	0.18	0.2	3.63e-03	6.2	6.2	6.2	6.2	18.6	3.6	1.5	-0.9	-4.9	2.8
4299	ok	0.18	0.2	3.75e-03	6.2	6.2	6.2	6.2	10.0	4.9	1.5	2.1	-5.9	2.9
4300	ok	0.18	0.2	4.06e-03	6.2	6.2	6.2	6.2	6.4	-2.5	-2.55e-02	5.4	-3.9	0.4
4301	ok	0.18	0.2	3.90e-03	6.2	6.2	6.2	6.2	15.5	2.3	1.7	2.4	-6.1	-2.5
4302	ok	0.18	0.2	4.15e-03	6.2	6.2	6.2	6.2	14.4	1.8	1.5	0.3	-5.2	-3.2

4303	ok	0.18	0.2	4.27e-03	6.2	6.2	6.2	6.2	13.1	2.5	4.1	-2.0	-4.7	-2.7
4304	ok	0.18	0.2	4.36e-03	6.2	6.2	6.2	6.2	12.2	3.0	5.2	-3.5	-4.6	-1.9
4305	ok	0.18	0.2	4.46e-03	6.2	6.2	6.2	6.2	11.1	3.5	6.3	-4.4	-4.6	-0.9
4306	ok	0.18	0.2	4.50e-03	6.2	6.2	6.2	6.2	9.6	4.0	7.3	-4.7	-4.7	0.3
4307	ok	0.18	0.2	5.02e-03	6.2	6.2	6.2	6.2	7.6	5.5	8.3	-4.7	-4.8	1.5
4308	ok	0.18	0.2	5.40e-03	6.2	6.2	6.2	6.2	4.4	6.6	9.2	-3.8	-5.2	2.9
4309	ok	0.18	0.2	6.27e-03	6.2	6.2	6.2	6.2	4.9	10.2	9.2	-2.9	-5.9	3.5
4310	ok	0.18	0.2	6.51e-03	6.2	6.2	6.2	6.2	0.7	10.1	2.5	-0.7	-5.6	4.4
4311	ok	0.18	0.3	5.90e-03	6.2	6.2	6.2	6.2	1.1	7.0	2.5	-0.8	-7.5	3.2
4312	ok	0.18	0.3	9.18e-03	6.2	6.2	6.2	6.2	-0.2	14.9	-1.9	-1.2	-10.8	-0.4
4313	ok	0.18	0.4	1.13e-02	6.2	6.2	6.2	6.2	4.7	26.8	-14.3	-2.7	-11.1	-2.4
4314	ok	0.18	0.3	7.18e-03	6.2	6.2	6.2	6.2	4.7	9.8	-10.7	-2.5	-7.8	-2.5
4315	ok	0.18	0.2	6.06e-03	6.2	6.2	6.2	6.2	4.8	7.9	-11.3	-2.7	-5.9	-2.1
4316	ok	0.18	0.2	5.31e-03	6.2	6.2	6.2	6.2	7.0	6.5	-8.6	-3.1	-5.2	-0.9
4317	ok	0.18	0.2	4.69e-03	6.2	6.2	6.2	6.2	8.1	4.7	-7.4	-3.1	-4.8	0.1
4318	ok	0.18	0.2	4.56e-03	6.2	6.2	6.2	6.2	8.3	4.2	-7.3	-3.0	-4.7	0.9
4319	ok	0.18	0.2	4.18e-03	6.2	6.2	6.2	6.2	8.7	3.5	-6.1	-2.4	-4.8	1.6
4320	ok	0.18	0.2	3.95e-03	6.2	6.2	6.2	6.2	9.4	3.1	-5.0	-1.5	-5.2	2.2
4321	ok	0.18	0.2	3.48e-03	6.2	6.2	6.2	6.2	5.7	3.5	0.9	-0.3	-5.8	1.8
4322	ok	0.18	0.2	3.51e-03	6.2	6.2	6.2	6.2	0.2	-5.5	-5.2	4.0	5.3	-0.7
4323	ok	0.18	0.3	5.55e-03	6.2	6.2	6.2	6.2	-5.8	-15.8	1.3	4.6	5.2	-1.2
4324	ok	0.18	0.2	4.15e-03	6.2	6.2	6.2	6.2	6.4	3.8	-1.2	0.6	-6.8	-1.7
4325	ok	0.18	0.2	3.29e-03	6.2	6.2	6.2	6.2	6.8	4.4	-1.8	-0.4	-5.3	-2.3
4326	ok	0.18	0.2	3.15e-03	6.2	6.2	6.2	6.2	6.8	4.7	3.86e-02	-1.6	-4.6	-2.1
4327	ok	0.18	0.2	2.95e-03	6.2	6.2	6.2	6.2	-1.6	4.7	-1.2	-2.2	-3.8	-2.1
4328	ok	0.18	0.1	2.93e-03	6.2	6.2	6.2	6.2	-1.0	4.7	-1.0	-2.7	-3.7	-1.4
4329	ok	0.18	0.1	2.78e-03	6.2	6.2	6.2	6.2	12.2	4.6	0.6	-2.9	-3.9	0.8
4330	ok	0.18	0.2	2.80e-03	6.2	6.2	6.2	6.2	12.2	4.6	0.5	-2.8	-4.0	1.5
4331	ok	0.18	0.2	2.70e-03	6.2	6.2	6.2	6.2	11.5	4.4	1.0	-2.2	-4.2	2.2
4332	ok	0.18	0.2	2.76e-03	6.2	6.2	6.2	6.2	11.2	4.3	1.2	-1.3	-4.7	2.6
4333	ok	0.18	0.2	2.89e-03	6.2	6.2	6.2	6.2	7.2	4.0	2.4	0.2	-5.2	2.4
4334	ok	0.18	0.2	3.56e-03	6.2	6.2	6.2	6.2	-3.1	-5.7	-5.9	3.9	4.9	-0.7
4335	ok	0.18	0.3	5.58e-03	6.2	6.2	6.2	6.2	-3.4	-15.9	-2.9	4.6	5.1	-1.1
4336	ok	0.18	0.2	3.45e-03	6.2	6.2	6.2	6.2	3.3	3.7	-2.0	1.2	-6.3	-1.7
4337	ok	0.18	0.2	2.91e-03	6.2	6.2	6.2	6.2	3.5	3.8	-2.8	0.2	-5.0	-2.4
4338	ok	0.18	0.2	2.72e-03	6.2	6.2	6.2	6.2	4.5	4.2	-1.8	-1.2	-4.5	-2.6
4339	ok	0.18	0.2	2.60e-03	6.2	6.2	6.2	6.2	5.0	4.4	-2.8	-2.2	-4.0	-2.1
4340	ok	0.18	0.1	2.59e-03	6.2	6.2	6.2	6.2	6.3	4.6	-1.3	-2.7	-3.9	-1.5
4341	ok	0.18	0.1	2.58e-03	6.2	6.2	6.2	6.2	6.3	4.4	2.7	-2.8	-3.8	0.7
4342	ok	0.18	0.1	2.34e-03	6.2	6.2	6.2	6.2	6.3	4.6	2.7	-2.7	-3.9	1.5
4343	ok	0.18	0.2	2.64e-03	6.2	6.2	6.2	6.2	5.1	4.4	3.0	-2.2	-4.0	2.1
4344	ok	0.18	0.2	2.75e-03	6.2	6.2	6.2	6.2	4.6	4.2	1.9	-1.3	-4.5	2.6
4345	ok	0.18	0.2	2.92e-03	6.2	6.2	6.2	6.2	9.8	3.8	1.0	-0.6	-5.3	1.9
4346	ok	0.18	0.2	3.48e-03	6.2	6.2	6.2	6.2	-1.6	-4.7	-4.8	4.1	5.0	-0.3
4347	ok	0.18	0.3	5.59e-03	6.2	6.2	6.2	6.2	-3.1	-16.0	2.9	4.6	5.1	1.0
4348	ok	0.18	0.2	3.55e-03	6.2	6.2	6.2	6.2	-2.8	-5.7	6.0	3.9	4.9	0.7
4349	ok	0.18	0.2	2.85e-03	6.2	6.2	6.2	6.2	7.2	4.0	-2.3	0.2	-5.2	-2.4
4350	ok	0.18	0.2	2.71e-03	6.2	6.2	6.2	6.2	11.1	4.1	-1.1	-1.3	-4.7	-2.6
4351	ok	0.18	0.2	2.67e-03	6.2	6.2	6.2	6.2	11.5	4.4	-0.9	-2.2	-4.2	-2.2
4352	ok	0.18	0.2	2.75e-03	6.2	6.2	6.2	6.2	12.1	4.6	-0.5	-2.8	-4.0	-1.5
4353	ok	0.18	0.1	2.74e-03	6.2	6.2	6.2	6.2	12.2	4.6	-0.6	-2.9	-3.9	-0.8
4354	ok	0.18	0.1	2.87e-03	6.2	6.2	6.2	6.2	-0.9	4.8	1.0	-2.7	-3.7	1.4
4355	ok	0.18	0.2	2.89e-03	6.2	6.2	6.2	6.2	-1.5	4.7	1.1	-2.2	-3.8	2.1
4356	ok	0.18	0.2	3.09e-03	6.2	6.2	6.2	6.2	6.7	4.8	-0.1	-1.6	-4.6	2.1
4357	ok	0.18	0.2	3.22e-03	6.2	6.2	6.2	6.2	12.8	3.8	3.4	-0.8	-5.5	2.0
4358	ok	0.18	0.2	4.12e-03	6.2	6.2	6.2	6.2	-4.5	-3.9	-9.0	4.2	5.4	-0.2
4359	ok	0.18	0.3	5.58e-03	6.2	6.2	6.2	6.2	-5.4	-16.0	-1.2	4.6	5.2	1.2
4360	ok	0.18	0.2	3.48e-03	6.2	6.2	6.2	6.2	-5.1	-5.4	1.9	3.9	5.0	0.9
4361	ok	0.18	0.2	3.43e-03	6.2	6.2	6.2	6.2	9.8	2.9	3.9	5.13e-02	-5.8	-1.9
4362	ok	0.18	0.2	3.89e-03	6.2	6.2	6.2	6.2	9.4	3.1	4.9	-1.5	-5.2	-2.2
4363	ok	0.18	0.2	4.12e-03	6.2	6.2	6.2	6.2	8.7	3.5	5.9	-2.4	-4.8	-1.6
4364	ok	0.18	0.2	4.50e-03	6.2	6.2	6.2	6.2	8.3	4.1	7.2	-3.0	-4.7	-0.9
4365	ok	0.18	0.2	4.62e-03	6.2	6.2	6.2	6.2	8.1	4.7	7.3	-3.1	-4.7	-0.1
4366	ok	0.18	0.2	5.25e-03	6.2	6.2	6.2	6.2	7.0	6.4	8.5	-3.1	-5.1	0.9
4367	ok	0.18	0.2	6.00e-03	6.2	6.2	6.2	6.2	4.8	7.8	11.2	-2.7	-5.9	2.1
4368	ok	0.18	0.3	7.11e-03	6.2	6.2	6.2	6.2	4.7	9.7	10.6	-2.5	-7.8	2.5
4369	ok	0.18	0.4	1.12e-02	6.2	6.2	6.2	6.2	4.6	26.6	14.2	-2.6	-11.0	2.4
4370	ok	0.18	0.3	9.15e-03	6.2	6.2	6.2	6.2	-0.2	14.7	1.9	-1.1	-10.8	0.4
4579	ok	0.18	0.4	1.24e-02	6.2	6.2	6.2	6.2	-1.3	-27.7	-0.8	2.1	12.5	-0.7
4580	ok	0.18	0.5	1.42e-02	6.2	6.2	6.2	6.2	-10.3	-13.0	21.4	6.1	16.3	-2.5
4581	ok	0.18	0.3	7.97e-03	6.2	6.2	6.2	6.2	3.5	13.0	-14.7	-4.2	-6.2	-1.6
4582	ok	0.18	0.1	6.24e-03	6.2	6.2	6.2	6.2	-5.6	-5.3	8.9	-0.4	5.1	-1.3
4583	ok	0.18	0.1	5.26e-03	6.2	6.2	6.2	6.2	-6.2	-2.4	7.4	-5.66e-02	5.3	-1.4
4584	ok	0.18	0.1	4.78e-03	6.2	6.2	6.2	6.2	-5.7	-3.1	6.7	0.4	4.5	-0.2
4585	ok	0.18	0.1	4.57e-03	6.2	6.2	6.2	6.2	-5.6	-2.2	6.2	0.4	5.2	-0.6
4586	ok	0.18	0.1	4.27e-03	6.2	6.2	6.2	6.2	5.7	2.9	-6.3	-1.2	-2.7	1.4
4587	ok	0.18	0.2	3.63e-03	6.2	6.2	6.2	6.2	2.0	3.2	-5.5	-1.2	-4.3	1.5
4588	ok	0.18	0.2	3.43e-03	6.2	6.2	6.2	6.2	-1.6	-1.4	2.9	0.3	5.0	0.9
4589	ok	0.18	0.2	3.28e-03	6.2	6.2	6.2	6.2	-2.8	0.4	-4.6	3.2	7.0	1.2

4590	ok	0.18	0.5	9.98e-03	6.2	6.2	6.2	6.2	-10.2	-6.8	15.4	9.6	16.8	-0.2
4591	ok	0.18	0.2	4.73e-03	6.2	6.2	6.2	6.2	-9.4	3.2	4.1	3.9	8.3	-1.3
4592	ok	0.18	0.2	3.43e-03	6.2	6.2	6.2	6.2	-8.4	-0.6	0.6	0.3	5.0	-1.1
4593	ok	0.18	0.2	2.87e-03	6.2	6.2	6.2	6.2	-2.5	-1.2	1.3	0.3	5.0	-1.6
4594	ok	0.18	0.1	2.84e-03	6.2	6.2	6.2	6.2	-2.5	-2.4	0.5	0.6	4.4	-0.9
4595	ok	0.18	0.1	2.77e-03	6.2	6.2	6.2	6.2	-2.4	-2.2	0.1	0.3	5.0	-1.2
4596	ok	0.18	0.1	2.93e-03	6.2	6.2	6.2	6.2	-2.4	-2.9	-0.7	0.6	4.7	-1.97e-02
4597	ok	0.18	0.1	2.79e-03	6.2	6.2	6.2	6.2	-2.5	-2.4	-1.75e-02	0.5	5.3	-0.4
4598	ok	0.18	0.1	3.00e-03	6.2	6.2	6.2	6.2	-2.2	-3.4	4.1	0.6	4.1	0.9
4599	ok	0.18	0.1	2.75e-03	6.2	6.2	6.2	6.2	2.7	4.5	3.3	-1.1	-3.7	1.8
4600	ok	0.18	0.1	3.15e-03	6.2	6.2	6.2	6.2	-4.9	-2.2	-5.4	0.1	4.8	1.1
4601	ok	0.18	0.2	3.15e-03	6.2	6.2	6.2	6.2	-4.9	1.6	-1.1	3.5	7.4	1.3
4602	ok	0.18	0.4	9.23e-03	6.2	6.2	6.2	6.2	-8.5	-7.7	11.5	9.2	16.0	1.56e-02
4603	ok	0.18	0.2	3.78e-03	6.2	6.2	6.2	6.2	-8.3	2.0	1.3	3.8	7.8	-1.3
4604	ok	0.18	0.2	3.31e-03	6.2	6.2	6.2	6.2	-6.9	-1.5	-4.3	0.3	4.7	-1.1
4605	ok	0.18	0.2	3.15e-03	6.2	6.2	6.2	6.2	-3.0	-2.1	-4.4	0.2	4.8	-1.6
4606	ok	0.18	0.1	3.02e-03	6.2	6.2	6.2	6.2	-4.4	-2.9	-4.8	0.6	4.2	-0.9
4607	ok	0.18	0.1	2.99e-03	6.2	6.2	6.2	6.2	-3.3	-2.6	-4.2	0.3	4.8	-1.2
4608	ok	0.18	0.1	2.99e-03	6.2	6.2	6.2	6.2	-3.3	-3.3	-5.0	0.6	4.5	-3.67e-02
4609	ok	0.18	0.1	2.25e-03	6.2	6.2	6.2	6.2	-3.2	-2.8	3.8	0.3	4.8	1.2
4610	ok	0.18	0.1	3.07e-03	6.2	6.2	6.2	6.2	-4.2	-3.1	4.5	0.6	4.2	0.9
4611	ok	0.18	0.2	3.10e-03	6.2	6.2	6.2	6.2	-2.8	-2.3	4.1	0.2	4.8	1.6
4612	ok	0.18	0.2	3.31e-03	6.2	6.2	6.2	6.2	-6.6	-1.8	4.2	0.3	4.7	1.1
4613	ok	0.18	0.2	3.71e-03	6.2	6.2	6.2	6.2	-8.1	1.8	-1.4	3.8	7.8	1.3
4614	ok	0.18	0.4	9.26e-03	6.2	6.2	6.2	6.2	-8.1	-7.7	-11.4	9.2	16.0	-4.36e-02
4615	ok	0.18	0.2	3.13e-03	6.2	6.2	6.2	6.2	-4.8	1.7	1.0	3.6	7.4	-1.3
4616	ok	0.18	0.1	3.10e-03	6.2	6.2	6.2	6.2	-2.3	-1.9	1.8	0.2	4.9	-1.1
4617	ok	0.18	0.1	2.68e-03	6.2	6.2	6.2	6.2	2.8	4.6	-3.1	-1.1	-3.7	-1.8
4618	ok	0.18	0.1	2.92e-03	6.2	6.2	6.2	6.2	-2.3	-2.7	0.8	0.3	4.5	-0.6
4619	ok	0.18	0.1	2.71e-03	6.2	6.2	6.2	6.2	-2.3	-2.4	-0.1	0.5	5.3	0.4
4620	ok	0.18	0.1	2.84e-03	6.2	6.2	6.2	6.2	-2.2	-2.9	0.5	0.6	4.8	6.23e-03
4621	ok	0.18	0.1	2.68e-03	6.2	6.2	6.2	6.2	-2.2	-2.2	-0.3	0.4	5.1	1.2
4622	ok	0.18	0.1	2.75e-03	6.2	6.2	6.2	6.2	-2.2	-2.4	-0.6	0.6	4.4	0.9
4623	ok	0.18	0.2	2.78e-03	6.2	6.2	6.2	6.2	-2.2	-1.2	-1.4	0.2	5.1	1.6
4624	ok	0.18	0.2	3.35e-03	6.2	6.2	6.2	6.2	-8.2	-1.1	-2.9	-0.2	5.0	1.6
4625	ok	0.18	0.2	4.64e-03	6.2	6.2	6.2	6.2	-9.0	3.0	-4.2	3.9	8.3	1.3
4626	ok	0.18	0.5	1.00e-02	6.2	6.2	6.2	6.2	-9.5	-7.1	-15.3	9.6	16.8	0.2
4627	ok	0.18	0.2	3.27e-03	6.2	6.2	6.2	6.2	-2.6	-2.36e-02	3.2	2.9	7.6	-0.9
4628	ok	0.18	0.2	3.41e-03	6.2	6.2	6.2	6.2	-1.4	-1.5	-2.7	0.3	5.0	-0.9
4629	ok	0.18	0.2	3.61e-03	6.2	6.2	6.2	6.2	2.0	3.2	5.4	-1.2	-4.3	-1.5
4630	ok	0.18	0.1	4.25e-03	6.2	6.2	6.2	6.2	5.7	2.9	6.2	-1.2	-2.7	-1.4
4631	ok	0.18	0.1	4.56e-03	6.2	6.2	6.2	6.2	-5.4	-2.3	-6.0	0.4	5.2	0.5
4632	ok	0.18	0.1	4.71e-03	6.2	6.2	6.2	6.2	-5.5	-3.1	-6.4	0.4	4.5	0.2
4633	ok	0.18	0.1	5.19e-03	6.2	6.2	6.2	6.2	-6.0	-2.4	-7.2	-6.76e-02	5.3	1.4
4634	ok	0.18	0.1	6.18e-03	6.2	6.2	6.2	6.2	-5.4	-5.2	-8.6	-0.4	5.1	1.2
4635	ok	0.18	0.3	7.89e-03	6.2	6.2	6.2	6.2	-6.5	-6.5	-9.0	2.0	8.5	1.4
4636	ok	0.18	0.5	1.41e-02	6.2	6.2	6.2	6.2	-10.0	-13.0	-21.1	6.0	16.3	2.5
4637	ok	0.18	0.4	1.23e-02	6.2	6.2	6.2	6.2	-1.3	-27.1	0.7	2.1	12.5	0.7
4638	ok	0.18	0.4	1.40e-02	6.2	6.2	6.2	6.2	-3.2	-32.9	0.9	2.8	12.7	-1.4
4639	ok	0.18	0.5	9.44e-03	6.2	6.2	6.2	6.2	-11.3	-1.1	15.7	6.5	16.3	-1.3
4640	ok	0.18	0.2	8.20e-03	6.2	6.2	6.2	6.2	-5.9	-13.2	12.9	1.5	8.7	-2.9
4641	ok	0.18	0.1	6.45e-03	6.2	6.2	6.2	6.2	-7.4	-7.0	8.5	-0.6	4.8	-2.4
4642	ok	0.18	0.2	5.39e-03	6.2	6.2	6.2	6.2	-7.0	-3.5	5.8	0.6	6.1	-1.5
4643	ok	0.18	0.1	5.15e-03	6.2	6.2	6.2	6.2	-6.8	-4.5	7.0	0.5	4.9	-1.3
4644	ok	0.18	0.2	4.48e-03	6.2	6.2	6.2	6.2	-6.6	-1.7	4.7	0.8	6.3	-0.3
4645	ok	0.18	0.2	4.27e-03	6.2	6.2	6.2	6.2	6.8	6.1	-5.2	-1.8	-4.4	1.5
4646	ok	0.18	0.2	3.53e-03	6.2	6.2	6.2	6.2	-3.6	-2.3	2.1	0.5	5.5	1.5
4647	ok	0.18	0.2	3.55e-03	6.2	6.2	6.2	6.2	-1.9	-1.1	2.7	0.7	5.3	1.0
4648	ok	0.18	0.2	4.48e-03	6.2	6.2	6.2	6.2	-3.6	-12.1	-2.5	2.8	7.9	1.0
4649	ok	0.18	0.5	4.93e-03	6.2	6.2	6.2	6.2	-8.7	14.1	13.7	9.4	16.6	-0.5
4650	ok	0.18	0.2	4.27e-03	6.2	6.2	6.2	6.2	-8.7	-8.6	5.3	3.6	8.5	-1.8
4651	ok	0.18	0.2	3.59e-03	6.2	6.2	6.2	6.2	-8.5	-2.5	2.3	0.1	4.6	-2.4
4652	ok	0.18	0.2	3.37e-03	6.2	6.2	6.2	6.2	-2.8	-1.2	-0.6	0.9	5.7	-1.9
4653	ok	0.18	0.1	3.13e-03	6.2	6.2	6.2	6.2	-3.1	-3.8	0.3	0.5	4.6	-2.0
4654	ok	0.18	0.2	3.42e-03	6.2	6.2	6.2	6.2	-3.0	-2.0	-1.2	1.1	6.3	-1.1
4655	ok	0.18	0.1	3.16e-03	6.2	6.2	6.2	6.2	-2.9	-4.3	6.98e-02	0.7	5.0	-1.1
4656	ok	0.18	0.2	3.41e-03	6.2	6.2	6.2	6.2	-2.7	-2.7	2.9	0.9	5.8	1.1
4657	ok	0.18	0.1	3.23e-03	6.2	6.2	6.2	6.2	-2.7	-5.0	1.6	0.4	4.1	1.9
4658	ok	0.18	0.2	3.25e-03	6.2	6.2	6.2	6.2	-4.1	-1.9	-2.1	0.5	5.6	1.8
4659	ok	0.18	0.2	3.29e-03	6.2	6.2	6.2	6.2	-3.0	-1.9	-1.9	0.7	5.2	1.2
4660	ok	0.18	0.2	4.77e-03	6.2	6.2	6.2	6.2	-5.0	-10.0	-1.0	3.3	7.6	1.6
4661	ok	0.18	0.5	4.61e-03	6.2	6.2	6.2	6.2	-7.0	12.7	10.8	9.0	15.9	-0.4
4662	ok	0.18	0.2	4.81e-03	6.2	6.2	6.2	6.2	-8.0	-9.5	1.9	3.5	8.0	-1.7
4663	ok	0.18	0.2	3.21e-03	6.2	6.2	6.2	6.2	-7.1	-3.6	-3.7	9.97e-02	4.4	-2.3
4664	ok	0.18	0.2	3.11e-03	6.2	6.2	6.2	6.2	-5.4	-1.9	-4.1	0.9	5.4	-1.9
4665	ok	0.18	0.1	3.40e-03	6.2	6.2	6.2	6.2	4.1	7.7	-3.2	-1.6	-3.4	-1.8
4666	ok	0.18	0.2	3.12e-03	6.2	6.2	6.2	6.2	-4.6	-2.3	-4.5	1.0	6.0	-1.1
4667	ok	0.18	0.1	2.77e-03	6.2	6.2	6.2	6.2	-4.3	-4.8	-3.2	0.6	4.7	-1.1
4668	ok	0.18	0.2	3.14e-03	6.2	6.2	6.2	6.2	-4.5	-2.5	4.2	1.0	6.0	1.1

4669	ok	0.18	0.1	3.33e-03	6.2	6.2	6.2	6.2	-5.3	-4.9	3.0	0.4	4.4	1.9
4670	ok	0.18	0.2	3.07e-03	6.2	6.2	6.2	6.2	-5.1	-2.1	3.9	0.8	5.4	1.9
4671	ok	0.18	0.2	3.21e-03	6.2	6.2	6.2	6.2	-6.8	-4.0	3.5	7.15e-02	4.4	2.3
4672	ok	0.18	0.2	4.87e-03	6.2	6.2	6.2	6.2	-7.7	-9.8	-1.8	3.5	8.0	1.6
4673	ok	0.18	0.5	4.53e-03	6.2	6.2	6.2	6.2	-6.5	12.7	-10.9	9.0	15.9	0.4
4674	ok	0.18	0.2	4.76e-03	6.2	6.2	6.2	6.2	-4.9	-9.9	1.1	3.3	7.6	-1.6
4675	ok	0.18	0.2	3.23e-03	6.2	6.2	6.2	6.2	-2.9	-1.8	1.8	0.7	5.2	-1.3
4676	ok	0.18	0.2	3.18e-03	6.2	6.2	6.2	6.2	-3.8	-1.8	2.1	0.6	5.6	-1.8
4677	ok	0.18	0.1	3.15e-03	6.2	6.2	6.2	6.2	3.8	7.3	-2.2	-1.6	-3.6	-1.9
4678	ok	0.18	0.2	3.33e-03	6.2	6.2	6.2	6.2	-2.5	-2.6	-3.0	0.9	5.8	-1.1
4679	ok	0.18	0.1	3.08e-03	6.2	6.2	6.2	6.2	-2.5	-4.3	-0.2	0.7	5.0	1.1
4680	ok	0.18	0.2	3.33e-03	6.2	6.2	6.2	6.2	-2.7	-2.0	1.1	1.1	6.3	1.1
4681	ok	0.18	0.1	3.01e-03	6.2	6.2	6.2	6.2	-2.7	-3.8	-0.5	0.5	4.6	1.9
4682	ok	0.18	0.2	3.29e-03	6.2	6.2	6.2	6.2	-2.5	-1.3	0.5	0.9	5.7	1.9
4683	ok	0.18	0.2	3.51e-03	6.2	6.2	6.2	6.2	-5.2	-1.6	-0.6	0.4	5.4	1.3
4684	ok	0.18	0.2	4.25e-03	6.2	6.2	6.2	6.2	-8.3	-8.9	-5.2	3.6	8.5	1.8
4685	ok	0.18	0.5	4.81e-03	6.2	6.2	6.2	6.2	-8.0	14.1	-13.9	9.4	16.7	0.5
4686	ok	0.18	0.2	4.50e-03	6.2	6.2	6.2	6.2	-3.3	-12.2	2.7	2.8	7.9	-1.1
4687	ok	0.18	0.2	3.53e-03	6.2	6.2	6.2	6.2	-1.8	-1.2	-2.6	0.7	5.3	-1.0
4688	ok	0.18	0.2	3.52e-03	6.2	6.2	6.2	6.2	-3.4	-2.3	-1.9	0.5	5.5	-1.5
4689	ok	0.18	0.2	4.20e-03	6.2	6.2	6.2	6.2	6.9	6.0	5.1	-1.8	-4.4	-1.5
4690	ok	0.18	0.2	4.43e-03	6.2	6.2	6.2	6.2	-3.8	-2.6	-2.3	0.5	5.8	-0.4
4691	ok	0.18	0.1	5.07e-03	6.2	6.2	6.2	6.2	-6.5	-4.5	-6.8	0.4	4.9	1.3
4692	ok	0.18	0.2	5.32e-03	6.2	6.2	6.2	6.2	-6.8	-3.6	-5.6	0.6	6.1	1.5
4693	ok	0.18	0.1	6.37e-03	6.2	6.2	6.2	6.2	-7.2	-6.8	-8.3	-0.6	4.8	2.4
4694	ok	0.18	0.2	8.12e-03	6.2	6.2	6.2	6.2	-5.8	-13.1	-12.6	1.5	8.7	2.9
4695	ok	0.18	0.5	9.38e-03	6.2	6.2	6.2	6.2	-11.0	-1.1	-15.6	6.5	16.3	1.3
4696	ok	0.18	0.4	1.39e-02	6.2	6.2	6.2	6.2	-3.1	-32.3	-0.9	2.8	12.7	1.3
4697	ok	0.18	0.2	1.16e-02	6.2	6.2	6.2	6.2	-1.9	-19.8	-1.4	-0.3	6.1	-0.9
4698	ok	0.18	0.2	8.58e-03	6.2	6.2	6.2	6.2	-7.2	-4.5	10.8	1.7	6.1	-2.7
4699	ok	0.18	0.2	6.55e-03	6.2	6.2	6.2	6.2	-6.5	-8.0	10.2	1.7	7.3	-2.7
4700	ok	0.18	0.3	8.31e-03	6.2	6.2	6.2	6.2	-11.5	-9.8	10.4	4.0	9.6	-1.6
4701	ok	0.18	0.2	6.34e-03	6.2	6.2	6.2	6.2	-9.8	-1.7	7.6	0.5	8.2	-0.8
4702	ok	0.18	0.3	6.97e-03	6.2	6.2	6.2	6.2	-10.7	-8.8	9.9	5.1	11.1	-0.7
4703	ok	0.18	0.2	5.52e-03	6.2	6.2	6.2	6.2	-9.7	1.0	6.6	0.7	8.6	-2.18e-02
4704	ok	0.18	0.3	6.33e-03	6.2	6.2	6.2	6.2	-9.7	-7.2	7.6	4.8	10.7	-0.1
4705	ok	0.18	0.2	5.05e-03	6.2	6.2	6.2	6.2	-8.8	1.3	4.8	0.9	7.8	0.8
4706	ok	0.18	0.2	5.08e-03	6.2	6.2	6.2	6.2	-3.9	-3.0	2.3	4.0	8.7	0.7
4707	ok	0.18	0.2	4.54e-03	6.2	6.2	6.2	6.2	-6.5	-0.9	-6.1	2.5	6.1	2.0
4708	ok	0.18	0.2	5.14e-03	6.2	6.2	6.2	6.2	-4.5	7.7	4.1	2.9	5.9	-1.0
4709	ok	0.18	0.2	6.67e-03	6.2	6.2	6.2	6.2	-4.2	3.9	6.3	2.8	7.0	-2.2
4710	ok	0.18	0.3	6.94e-03	6.2	6.2	6.2	6.2	-5.5	-2.7	3.3	3.4	8.4	-1.8
4711	ok	0.18	0.2	7.43e-03	6.2	6.2	6.2	6.2	-4.4	0.4	1.0	0.6	7.5	-1.1
4712	ok	0.18	0.3	7.80e-03	6.2	6.2	6.2	6.2	-6.0	-7.1	3.5	5.1	10.7	-1.0
4713	ok	0.18	0.3	8.23e-03	6.2	6.2	6.2	6.2	-5.2	1.2	0.2	0.7	8.7	-0.4
4714	ok	0.18	0.3	8.45e-03	6.2	6.2	6.2	6.2	-4.3	6.6	6.3	5.5	11.6	-0.8
4715	ok	0.18	0.3	8.78e-03	6.2	6.2	6.2	6.2	-3.9	1.6	1.5	-1.6	7.7	0.8
4716	ok	0.18	0.3	7.14e-03	6.2	6.2	6.2	6.2	-10.4	-7.8	2.7	4.9	10.9	-1.26e-02
4717	ok	0.18	0.2	9.09e-03	6.2	6.2	6.2	6.2	-9.8	0.8	-0.2	0.9	7.8	0.5
4718	ok	0.18	0.2	8.27e-03	6.2	6.2	6.2	6.2	-10.1	-4.1	-2.7	3.9	8.6	0.9
4719	ok	0.18	0.2	8.66e-03	6.2	6.2	6.2	6.2	-8.5	0.2	-1.4	2.6	6.4	2.1
4720	ok	0.18	0.2	7.64e-03	6.2	6.2	6.2	6.2	-6.3	6.3	-0.9	2.8	5.6	-0.9
4721	ok	0.18	0.2	9.27e-03	6.2	6.2	6.2	6.2	-5.8	0.8	1.4	2.7	6.7	-2.2
4722	ok	0.18	0.2	8.92e-03	6.2	6.2	6.2	6.2	-11.3	-3.9	1.0	3.3	7.9	-1.7
4723	ok	0.18	0.2	9.51e-03	6.2	6.2	6.2	6.2	1.1	1.0	1.9	-1.5	7.0	-0.5
4724	ok	0.18	0.3	8.31e-03	6.2	6.2	6.2	6.2	-11.4	-7.9	1.5	4.9	10.2	-1.0
4725	ok	0.18	0.2	9.68e-03	6.2	6.2	6.2	6.2	0.4	2.0	1.5	-1.4	8.0	0.3
4726	ok	0.18	0.3	7.92e-03	6.2	6.2	6.2	6.2	-4.4	6.9	5.8	5.3	11.3	-0.7
4727	ok	0.18	0.2	9.70e-03	6.2	6.2	6.2	6.2	0.4	2.3	2.9	-1.5	7.9	0.8
4728	ok	0.18	0.3	8.30e-03	6.2	6.2	6.2	6.2	-11.1	-8.0	-1.7	4.8	10.2	1.0
4729	ok	0.18	0.2	9.52e-03	6.2	6.2	6.2	6.2	0.9	2.0	2.8	-1.4	6.7	1.3
4730	ok	0.18	0.2	8.91e-03	6.2	6.2	6.2	6.2	-10.0	-5.4	-5.3	3.7	8.3	0.9
4731	ok	0.18	0.2	9.29e-03	6.2	6.2	6.2	6.2	-5.6	0.6	-1.6	2.7	6.7	2.2
4732	ok	0.18	0.2	7.29e-03	6.2	6.2	6.2	6.2	-6.1	6.3	0.9	2.8	5.6	0.9
4733	ok	0.18	0.2	8.59e-03	6.2	6.2	6.2	6.2	-8.3	0.1	1.3	2.7	6.4	-2.1
4734	ok	0.18	0.2	8.29e-03	6.2	6.2	6.2	6.2	-9.7	-3.7	2.8	3.9	8.6	-0.9
4735	ok	0.18	0.2	9.08e-03	6.2	6.2	6.2	6.2	2.1	1.5	1.1	-1.5	7.2	-0.5
4736	ok	0.18	0.3	7.20e-03	6.2	6.2	6.2	6.2	-10.6	-8.8	1.6	4.7	10.1	-0.9
4737	ok	0.18	0.3	8.78e-03	6.2	6.2	6.2	6.2	1.7	2.7	0.4	-1.4	8.3	0.3
4738	ok	0.18	0.3	8.35e-03	6.2	6.2	6.2	6.2	-3.8	6.9	-6.4	5.4	11.6	0.8
4739	ok	0.18	0.3	8.23e-03	6.2	6.2	6.2	6.2	1.8	3.3	-1.99e-02	-1.5	8.3	0.8
4740	ok	0.18	0.3	7.71e-03	6.2	6.2	6.2	6.2	-5.5	-6.9	-3.5	5.0	10.7	1.0
4741	ok	0.18	0.2	7.43e-03	6.2	6.2	6.2	6.2	2.3	3.3	-0.4	-1.3	7.1	1.3
4742	ok	0.18	0.3	6.86e-03	6.2	6.2	6.2	6.2	-5.1	-2.6	-3.3	3.4	8.4	1.7
4743	ok	0.18	0.2	6.69e-03	6.2	6.2	6.2	6.2	-3.9	4.0	-6.5	2.8	7.0	2.2
4744	ok	0.18	0.2	5.11e-03	6.2	6.2	6.2	6.2	-4.2	7.4	-4.2	2.9	5.9	0.9
4745	ok	0.18	0.2	4.51e-03	6.2	6.2	6.2	6.2	-6.3	-1.0	6.2	2.5	6.1	-2.0
4746	ok	0.18	0.2	5.09e-03	6.2	6.2	6.2	6.2	-3.5	-2.9	-2.1	4.0	8.7	-0.8
4747	ok	0.18	0.2	5.02e-03	6.2	6.2	6.2	6.2	-8.5	1.1	-4.6	0.9	7.8	-0.8

4748	ok	0.18	0.3	6.34e-03	6.2	6.2	6.2	6.2	-9.2	-7.1	-7.3	4.8	10.7	6.05e-02
4749	ok	0.18	0.2	5.44e-03	6.2	6.2	6.2	6.2	1.8	2.2	-5.1	-1.3	8.0	0.3
4750	ok	0.18	0.3	6.81e-03	6.2	6.2	6.2	6.2	-10.3	-8.6	-9.4	5.1	11.1	0.6
4751	ok	0.18	0.2	6.27e-03	6.2	6.2	6.2	6.2	0.9	1.4	-6.2	-1.4	7.6	1.0
4752	ok	0.18	0.3	8.13e-03	6.2	6.2	6.2	6.2	-11.1	-9.5	-10.0	4.0	9.6	1.6
4753	ok	0.18	0.2	6.50e-03	6.2	6.2	6.2	6.2	-6.4	-7.8	-10.1	1.7	7.3	2.7
4754	ok	0.18	0.2	8.52e-03	6.2	6.2	6.2	6.2	-7.0	-4.2	-10.6	1.7	6.0	2.7
4755	ok	0.18	0.2	1.15e-02	6.2	6.2	6.2	6.2	-1.9	-19.2	1.4	-0.2	6.1	0.9
4756	ok	0.18	9.50e-02	1.14e-02	6.2	6.2	6.2	6.2	-0.2	-18.2	-1.2	-0.5	-1.0	-1.3
4757	ok	0.18	8.80e-02	7.53e-03	6.2	6.2	6.2	6.2	-6.7	-19.9	-6.2	2.3	0.4	-0.5
4758	ok	0.18	9.52e-02	4.08e-03	6.2	6.2	6.2	6.2	-5.3	-11.8	2.6	1.8	1.2	-0.5
4759	ok	0.18	9.33e-02	4.50e-03	6.2	6.2	6.2	6.2	1.5	-3.4	-13.5	1.9	0.9	-0.6
4760	ok	0.18	0.1	3.56e-03	6.2	6.2	6.2	6.2	2.2	0.6	-11.5	2.1	1.2	-1.0
4761	ok	0.18	0.1	4.56e-03	6.2	6.2	6.2	6.2	0.2	4.1	-16.9	1.7	1.1	-0.5
4762	ok	0.18	0.1	5.21e-03	6.2	6.2	6.2	6.2	1.7	3.9	-15.5	2.0	1.3	-1.0
4763	ok	0.18	0.1	5.91e-03	6.2	6.2	6.2	6.2	-1.8	6.7	-4.8	1.4	2.7	-0.7
4764	ok	0.18	0.1	6.88e-03	6.2	6.2	6.2	6.2	-1.4	1.6	-3.1	2.0	3.9	-0.8
4765	ok	0.18	0.1	7.37e-03	6.2	6.2	6.2	6.2	-3.0	4.7	-9.6	1.7	2.3	-0.1
4766	ok	0.18	0.1	8.23e-03	6.2	6.2	6.2	6.2	-1.0	3.7	-7.8	1.6	1.9	-0.6
4767	ok	0.18	0.1	8.69e-03	6.2	6.2	6.2	6.2	0.4	3.3	-23.8	1.9	0.5	-0.6
4768	ok	0.18	0.1	8.83e-03	6.2	6.2	6.2	6.2	-9.9	0.7	8.9	1.6	1.7	0.5
4769	ok	0.18	0.1	9.30e-03	6.2	6.2	6.2	6.2	-11.2	2.7	10.9	1.2	1.8	0.4
4770	ok	0.18	0.1	9.13e-03	6.2	6.2	6.2	6.2	1.7	3.3	-23.6	2.0	1.1	-1.0
4771	ok	0.18	0.1	9.90e-03	6.2	6.2	6.2	6.2	-0.8	4.1	-27.6	1.7	1.1	-0.6
4772	ok	0.18	0.2	9.70e-03	6.2	6.2	6.2	6.2	0.5	3.8	-25.9	2.2	1.5	-1.0
4773	ok	0.18	0.1	1.06e-02	6.2	6.2	6.2	6.2	-1.9	4.6	-28.7	1.7	1.2	-0.6
4774	ok	0.18	0.2	1.03e-02	6.2	6.2	6.2	6.2	-0.3	3.7	-26.8	2.3	1.5	-1.0
4775	ok	0.18	0.1	1.11e-02	6.2	6.2	6.2	6.2	-2.7	4.0	-29.7	1.7	1.0	-0.5
4776	ok	0.18	0.2	1.09e-02	6.2	6.2	6.2	6.2	-1.3	3.1	-27.8	2.1	1.1	-1.0
4777	ok	0.18	0.1	1.15e-02	6.2	6.2	6.2	6.2	-6.7	3.9	-16.5	1.6	2.2	-0.4
4778	ok	0.18	0.1	1.13e-02	6.2	6.2	6.2	6.2	-2.9	2.6	-14.5	1.7	1.9	-0.6
4779	ok	0.18	0.1	1.18e-02	6.2	6.2	6.2	6.2	-3.8	1.6	-31.9	1.8	0.5	-0.6
4780	ok	0.18	0.1	1.10e-02	6.2	6.2	6.2	6.2	-10.1	1.7	14.9	1.6	1.8	0.5
4781	ok	0.18	0.1	1.15e-02	6.2	6.2	6.2	6.2	-3.9	3.2	-15.8	1.4	1.8	-1.0
4782	ok	0.18	0.1	1.06e-02	6.2	6.2	6.2	6.2	-3.1	2.4	-13.7	1.9	3.3	-0.7
4783	ok	0.18	0.1	1.14e-02	6.2	6.2	6.2	6.2	-9.2	2.6	-33.2	1.7	1.1	-0.6
4784	ok	0.18	0.2	1.06e-02	6.2	6.2	6.2	6.2	-8.8	2.7	30.6	2.2	1.4	1.0
4785	ok	0.18	0.1	1.15e-02	6.2	6.2	6.2	6.2	-10.3	3.2	-33.1	1.6	1.2	-0.6
4786	ok	0.18	0.2	1.06e-02	6.2	6.2	6.2	6.2	-8.7	2.6	-30.9	2.2	1.4	-1.0
4787	ok	0.18	0.1	1.15e-02	6.2	6.2	6.2	6.2	-8.9	1.8	33.0	1.6	1.1	0.6
4788	ok	0.18	0.1	1.07e-02	6.2	6.2	6.2	6.2	-3.1	1.9	13.0	1.8	3.3	0.6
4789	ok	0.18	0.1	1.15e-02	6.2	6.2	6.2	6.2	-3.8	2.7	15.0	1.3	1.8	1.0
4790	ok	0.18	0.1	1.11e-02	6.2	6.2	6.2	6.2	-10.0	1.5	-15.3	1.6	1.8	-0.6
4791	ok	0.18	0.1	1.18e-02	6.2	6.2	6.2	6.2	-3.6	1.5	32.0	1.9	0.5	0.6
4792	ok	0.18	0.1	1.13e-02	6.2	6.2	6.2	6.2	-2.7	2.5	14.2	1.6	1.9	0.6
4793	ok	0.18	0.1	1.15e-02	6.2	6.2	6.2	6.2	-6.4	3.8	16.3	1.5	2.2	0.4
4794	ok	0.18	0.2	1.09e-02	6.2	6.2	6.2	6.2	-1.1	3.0	27.7	2.1	1.1	1.0
4795	ok	0.18	0.1	1.12e-02	6.2	6.2	6.2	6.2	-2.4	3.8	29.8	1.7	1.0	0.5
4796	ok	0.18	0.2	1.04e-02	6.2	6.2	6.2	6.2	-9.30e-02	3.5	26.6	2.3	1.5	1.0
4797	ok	0.18	0.1	1.06e-02	6.2	6.2	6.2	6.2	-1.6	4.5	28.8	1.7	1.2	0.5
4798	ok	0.18	0.2	9.81e-03	6.2	6.2	6.2	6.2	0.7	3.6	25.7	2.2	1.5	1.0
4799	ok	0.18	0.1	9.98e-03	6.2	6.2	6.2	6.2	-0.5	4.0	27.6	1.7	1.1	0.6
4800	ok	0.18	0.1	9.21e-03	6.2	6.2	6.2	6.2	1.9	3.2	23.3	2.0	1.1	1.0
4801	ok	0.18	0.1	9.44e-03	6.2	6.2	6.2	6.2	-11.1	2.6	-11.5	1.2	1.8	-0.4
4802	ok	0.18	0.1	8.92e-03	6.2	6.2	6.2	6.2	-9.8	0.6	-9.4	1.6	1.7	-0.5
4803	ok	0.18	0.1	8.69e-03	6.2	6.2	6.2	6.2	0.6	3.3	23.6	1.9	0.5	0.6
4804	ok	0.18	0.1	8.22e-03	6.2	6.2	6.2	6.2	-0.8	3.4	7.6	1.6	1.9	0.5
4805	ok	0.18	0.1	7.46e-03	6.2	6.2	6.2	6.2	-2.9	4.5	9.5	1.6	2.3	0.1
4806	ok	0.18	0.1	6.96e-03	6.2	6.2	6.2	6.2	-1.2	1.4	2.9	2.0	3.9	0.8
4807	ok	0.18	0.1	6.01e-03	6.2	6.2	6.2	6.2	-1.7	6.3	4.8	1.4	2.6	0.7
4808	ok	0.18	0.1	5.27e-03	6.2	6.2	6.2	6.2	1.7	3.6	15.3	2.0	1.3	1.0
4809	ok	0.18	9.93e-02	4.59e-03	6.2	6.2	6.2	6.2	0.4	3.9	17.0	1.7	1.0	0.5
4810	ok	0.18	0.1	3.50e-03	6.2	6.2	6.2	6.2	2.2	0.4	11.4	2.1	1.2	1.0
4811	ok	0.18	9.22e-02	4.57e-03	6.2	6.2	6.2	6.2	2.0	-2.0	12.6	1.9	0.6	0.6
4812	ok	0.18	9.53e-02	4.06e-03	6.2	6.2	6.2	6.2	-5.2	-11.8	-2.6	1.8	1.2	0.5
4813	ok	0.18	8.88e-02	7.47e-03	6.2	6.2	6.2	6.2	-6.6	-19.7	6.2	2.3	0.4	0.5
4814	ok	0.18	9.53e-02	1.13e-02	6.2	6.2	6.2	6.2	-0.2	-17.5	1.2	-0.5	-1.0	1.3
4815	ok	0.18	8.28e-02	9.53e-03	6.2	6.2	6.2	6.2	-1.2	-15.2	-2.0	0.1	-0.8	-0.3
4816	ok	0.18	5.19e-02	7.02e-03	6.2	6.2	6.2	6.2	0.6	-12.9	-7.5	1.4	0.1	-0.4
4817	ok	0.18	5.13e-02	4.61e-03	6.2	6.2	6.2	6.2	1.5	-5.4	-11.8	-0.6	-0.3	-0.7
4818	ok	0.18	7.24e-02	6.40e-03	6.2	6.2	6.2	6.2	0.4	-3.4	-18.1	1.1	0.1	-0.5
4819	ok	0.18	7.20e-02	5.84e-03	6.2	6.2	6.2	6.2	3.4	3.1	-18.8	-0.8	-0.4	-0.9
4820	ok	0.18	8.65e-02	6.71e-03	6.2	6.2	6.2	6.2	0.7	1.4	-22.9	0.9	0.1	-0.6
4821	ok	0.18	8.37e-02	8.16e-03	6.2	6.2	6.2	6.2	5.5	4.1	-21.3	-0.9	-0.4	-0.9
4822	ok	0.18	9.46e-02	8.73e-03	6.2	6.2	6.2	6.2	2.7	1.6	-24.7	1.0	0.1	-0.7
4823	ok	0.18	9.05e-02	9.71e-03	6.2	6.2	6.2	6.2	6.9	4.0	-23.0	-0.9	-0.4	-0.9
4824	ok	0.18	0.1	1.01e-02	6.2	6.2	6.2	6.2	3.6	1.4	-26.2	1.1	0.2	-0.7
4825	ok	0.18	9.37e-02	1.05e-02	6.2	6.2	6.2	6.2	6.7	3.7	-25.0	-1.0	-0.3	-0.9
4826	ok	0.18	0.1	1.09e-02	6.2	6.2	6.2	6.2	4.5	1.4	-27.6	1.0	0.2	-0.7

4827	ok	0.18	9.70e-02	1.17e-02	6.2	6.2	6.2	6.2	-17.7	0.9	25.2	-1.1	-0.3	0.8
4828	ok	0.18	0.1	1.22e-02	6.2	6.2	6.2	6.2	3.6	0.9	-29.0	1.1	0.1	-0.6
4829	ok	0.18	0.1	1.21e-02	6.2	6.2	6.2	6.2	-18.0	1.4	26.9	-1.0	-0.4	0.9
4830	ok	0.18	0.1	1.28e-02	6.2	6.2	6.2	6.2	2.2	1.3	-31.8	0.9	0.1	-0.7
4831	ok	0.18	0.1	1.26e-02	6.2	6.2	6.2	6.2	-18.1	2.1	28.8	-0.9	-0.4	0.9
4832	ok	0.18	0.1	1.33e-02	6.2	6.2	6.2	6.2	5.4	2.3	-27.9	-0.8	-0.2	-0.8
4833	ok	0.18	0.1	1.30e-02	6.2	6.2	6.2	6.2	3.6	3.6	-31.0	-0.9	-0.4	-1.0
4834	ok	0.18	0.1	1.37e-02	6.2	6.2	6.2	6.2	-2.6	0.9	-33.6	0.9	0.1	-0.7
4835	ok	0.18	0.1	1.32e-02	6.2	6.2	6.2	6.2	1.8	2.9	-32.0	-0.9	-0.4	-1.0
4836	ok	0.18	0.1	1.37e-02	6.2	6.2	6.2	6.2	-2.8	0.4	-34.5	1.0	0.1	-0.7
4837	ok	0.18	0.1	1.30e-02	6.2	6.2	6.2	6.2	-0.9	2.4	-33.2	-1.0	-0.3	-0.9
4838	ok	0.18	0.1	1.34e-02	6.2	6.2	6.2	6.2	-5.6	0.2	-34.7	1.0	0.1	-0.7
4839	ok	0.18	0.1	1.31e-02	6.2	6.2	6.2	6.2	-12.8	1.3	33.4	-1.1	-0.3	0.9
4840	ok	0.18	0.1	1.36e-02	6.2	6.2	6.2	6.2	-6.3	-0.4	-35.4	1.0	0.1	-0.7
4841	ok	0.18	0.1	1.27e-02	6.2	6.2	6.2	6.2	-11.0	2.1	33.7	-1.0	-0.4	0.9
4842	ok	0.18	0.1	1.34e-02	6.2	6.2	6.2	6.2	-9.0	-6.00e-02	-36.8	0.9	0.1	-0.7
4843	ok	0.18	0.1	1.25e-02	6.2	6.2	6.2	6.2	-10.0	2.5	34.1	-0.9	-0.4	0.9
4844	ok	0.18	9.99e-02	1.34e-02	6.2	6.2	6.2	6.2	-6.1	0.9	-33.0	-0.7	-0.2	-0.8
4845	ok	0.18	0.1	1.26e-02	6.2	6.2	6.2	6.2	-10.0	2.4	-34.8	-0.9	-0.4	-1.0
4846	ok	0.18	0.1	1.35e-02	6.2	6.2	6.2	6.2	-9.5	0.7	-33.1	-0.7	-0.2	-0.8
4847	ok	0.18	0.1	1.29e-02	6.2	6.2	6.2	6.2	-10.8	1.9	-34.3	-1.0	-0.4	-1.0
4848	ok	0.18	0.1	1.37e-02	6.2	6.2	6.2	6.2	-16.4	-0.5	-35.1	0.9	0.1	-0.7
4849	ok	0.18	0.1	1.31e-02	6.2	6.2	6.2	6.2	-12.6	1.2	-33.7	-1.1	-0.3	-0.9
4850	ok	0.18	0.1	1.34e-02	6.2	6.2	6.2	6.2	-17.0	-0.7	-33.8	0.9	0.1	-0.7
4851	ok	0.18	0.1	1.30e-02	6.2	6.2	6.2	6.2	-0.7	2.2	32.8	-1.0	-0.3	0.9
4852	ok	0.18	0.1	1.38e-02	6.2	6.2	6.2	6.2	-3.5	1.1	30.6	0.9	0.1	0.6
4853	ok	0.18	0.1	1.32e-02	6.2	6.2	6.2	6.2	2.1	2.5	31.5	-0.9	-0.4	0.9
4854	ok	0.18	0.1	1.38e-02	6.2	6.2	6.2	6.2	4.1	1.5	28.5	-0.7	-0.2	0.8
4855	ok	0.18	0.1	1.30e-02	6.2	6.2	6.2	6.2	3.9	3.2	30.6	-0.9	-0.4	0.9
4856	ok	0.18	0.1	1.35e-02	6.2	6.2	6.2	6.2	5.6	1.9	27.3	-0.7	-0.2	0.8
4857	ok	0.18	0.1	1.26e-02	6.2	6.2	6.2	6.2	-17.9	1.7	-29.2	-0.9	-0.4	-0.9
4858	ok	0.18	0.1	1.29e-02	6.2	6.2	6.2	6.2	6.8	1.8	26.0	-0.7	-0.2	0.7
4859	ok	0.18	0.1	1.22e-02	6.2	6.2	6.2	6.2	-17.8	1.1	-27.2	-1.0	-0.4	-0.9
4860	ok	0.18	0.1	1.23e-02	6.2	6.2	6.2	6.2	-20.4	-1.3	-26.6	0.8	9.79e-02	-0.6
4861	ok	0.18	9.61e-02	1.18e-02	6.2	6.2	6.2	6.2	-17.5	0.7	-25.6	-1.0	-0.4	-0.9
4862	ok	0.18	0.1	1.09e-02	6.2	6.2	6.2	6.2	4.9	2.3	23.6	1.0	0.1	0.6
4863	ok	0.18	9.31e-02	1.05e-02	6.2	6.2	6.2	6.2	6.7	3.4	24.7	-1.0	-0.3	0.9
4864	ok	0.18	0.1	1.02e-02	6.2	6.2	6.2	6.2	4.4	2.7	21.3	1.0	0.1	0.6
4865	ok	0.18	8.92e-02	9.77e-03	6.2	6.2	6.2	6.2	6.9	3.5	22.7	-0.9	-0.4	0.9
4866	ok	0.18	9.32e-02	8.86e-03	6.2	6.2	6.2	6.2	5.4	1.6	19.4	-0.7	-0.2	0.8
4867	ok	0.18	8.24e-02	8.23e-03	6.2	6.2	6.2	6.2	5.4	3.6	21.0	-0.9	-0.4	0.9
4868	ok	0.18	8.47e-02	6.74e-03	6.2	6.2	6.2	6.2	3.3	0.9	16.9	-0.7	-0.2	0.7
4869	ok	0.18	7.08e-02	5.93e-03	6.2	6.2	6.2	6.2	3.3	2.7	18.6	-0.8	-0.4	0.9
4870	ok	0.18	7.11e-02	6.45e-03	6.2	6.2	6.2	6.2	0.6	-3.5	12.6	1.0	-0.1	0.4
4871	ok	0.18	5.15e-02	4.60e-03	6.2	6.2	6.2	6.2	-2.4	10.4	-1.6	-1.2	-0.2	-0.5
4872	ok	0.18	5.19e-02	6.95e-03	6.2	6.2	6.2	6.2	0.5	-12.7	7.5	1.4	0.1	0.4
4873	ok	0.18	8.30e-02	9.44e-03	6.2	6.2	6.2	6.2	-1.2	-14.6	1.9	0.1	-0.8	0.3
4874	ok	0.18	4.91e-02	6.00e-03	6.2	6.2	6.2	6.2	-2.4	6.9	4.7	6.46e-02	0.2	0.1
4875	ok	0.18	4.29e-02	5.42e-03	6.2	6.2	6.2	6.2	0.7	-13.7	-6.4	0.7	-5.83e-03	-0.4
4876	ok	0.18	4.19e-02	4.62e-03	6.2	6.2	6.2	6.2	2.6	-2.2	-14.4	-0.4	-0.3	-0.6
4877	ok	0.18	7.30e-02	6.32e-03	6.2	6.2	6.2	6.2	3.6	-0.9	-19.7	0.5	-5.45e-02	-0.7
4878	ok	0.18	6.91e-02	7.84e-03	6.2	6.2	6.2	6.2	5.3	1.4	-17.8	-0.5	-0.3	-0.8
4879	ok	0.18	8.67e-02	9.27e-03	6.2	6.2	6.2	6.2	6.3	0.8	-23.0	0.5	-9.12e-03	-0.7
4880	ok	0.18	8.16e-02	1.01e-02	6.2	6.2	6.2	6.2	7.8	3.4	-20.5	-0.5	-0.3	-0.8
4881	ok	0.18	9.23e-02	1.10e-02	6.2	6.2	6.2	6.2	8.0	1.0	-24.3	0.5	-8.18e-03	-0.7
4882	ok	0.18	8.75e-02	1.15e-02	6.2	6.2	6.2	6.2	9.0	3.7	-22.4	-0.5	-0.3	-0.9
4883	ok	0.18	9.80e-02	1.20e-02	6.2	6.2	6.2	6.2	8.6	0.8	-25.8	0.5	-2.30e-03	-0.8
4884	ok	0.18	9.18e-02	1.24e-02	6.2	6.2	6.2	6.2	9.2	1.4	-25.5	-0.5	-0.3	-0.9
4885	ok	0.18	9.94e-02	1.30e-02	6.2	6.2	6.2	6.2	8.3	7.68e-02	-27.1	0.5	-3.60e-02	-0.7
4886	ok	0.18	9.29e-02	1.34e-02	6.2	6.2	6.2	6.2	8.5	1.2	-26.5	-0.5	-0.3	-0.9
4887	ok	0.18	0.1	1.36e-02	6.2	6.2	6.2	6.2	7.7	-0.1	-28.6	0.5	-3.48e-02	-0.7
4888	ok	0.18	9.70e-02	1.39e-02	6.2	6.2	6.2	6.2	7.2	1.2	-28.1	-0.5	-0.3	-0.9
4889	ok	0.18	0.1	1.40e-02	6.2	6.2	6.2	6.2	6.3	0.6	-29.6	0.5	-2.58e-02	-0.8
4890	ok	0.18	9.81e-02	1.43e-02	6.2	6.2	6.2	6.2	-27.8	-0.9	28.8	-0.6	-0.3	0.8
4891	ok	0.18	0.1	1.44e-02	6.2	6.2	6.2	6.2	4.2	0.5	-30.6	0.5	-3.03e-02	-0.8
4892	ok	0.18	9.79e-02	1.46e-02	6.2	6.2	6.2	6.2	3.2	2.5	-30.7	-0.5	-0.3	-0.9
4893	ok	0.18	0.1	1.47e-02	6.2	6.2	6.2	6.2	1.7	0.3	-31.4	0.5	-2.98e-02	-0.8
4894	ok	0.18	9.74e-02	1.45e-02	6.2	6.2	6.2	6.2	0.6	2.1	-31.8	-0.5	-0.3	-0.9
4895	ok	0.18	0.1	1.46e-02	6.2	6.2	6.2	6.2	-1.0	-7.40e-02	-32.3	0.5	-1.83e-02	-0.8
4896	ok	0.18	9.76e-02	1.43e-02	6.2	6.2	6.2	6.2	-2.1	0.7	-31.7	-0.5	-0.3	-0.9
4897	ok	0.18	9.63e-02	1.44e-02	6.2	6.2	6.2	6.2	-6.1	-0.8	-32.7	0.4	-4.61e-02	-0.8
4898	ok	0.18	9.19e-02	1.40e-02	6.2	6.2	6.2	6.2	-7.1	0.5	-32.2	-0.5	-0.3	-0.9
4899	ok	0.18	9.53e-02	1.40e-02	6.2	6.2	6.2	6.2	-6.5	-0.3	-33.2	0.5	-1.45e-02	-0.8
4900	ok	0.18	9.20e-02	1.36e-02	6.2	6.2	6.2	6.2	-16.8	0.2	33.7	-0.6	-0.3	0.9
4901	ok	0.18	9.36e-02	1.36e-02	6.2	6.2	6.2	6.2	-9.5	-0.4	-33.9	0.4	-3.23e-02	-0.8
4902	ok	0.18	8.96e-02	1.31e-02	6.2	6.2	6.2	6.2	-14.3	0.3	33.9	-0.6	-0.3	0.9
4903	ok	0.18	8.98e-02	1.33e-02	6.2	6.2	6.2	6.2	-12.5	-0.6	-33.8	0.4	-3.87e-02	-0.8
4904	ok	0.18	8.75e-02	1.32e-02	6.2	6.2	6.2	6.2	-14.0	0.3	-34.7	-0.6	-0.3	-0.9
4905	ok	0.18	9.10e-02	1.37e-02	6.2	6.2	6.2	6.2	-15.2	-0.6	-33.4	0.4	-2.89e-02	-0.8

4906	ok	0.18	9.13e-02	1.36e-02	6.2	6.2	6.2	6.2	-16.6	9.08e-02	-34.4	-0.6	-0.3	-0.9
4907	ok	0.18	9.42e-02	1.39e-02	6.2	6.2	6.2	6.2	-17.7	-0.6	-33.0	0.4	-1.09e-02	-0.8
4908	ok	0.18	9.44e-02	1.40e-02	6.2	6.2	6.2	6.2	-6.9	0.5	32.1	-0.5	-0.3	0.9
4909	ok	0.18	9.86e-02	1.43e-02	6.2	6.2	6.2	6.2	-22.1	-1.4	-32.0	0.4	-3.47e-02	-0.8
4910	ok	0.18	9.57e-02	1.44e-02	6.2	6.2	6.2	6.2	-1.8	0.5	31.4	-0.5	-0.3	0.9
4911	ok	0.18	9.92e-02	1.46e-02	6.2	6.2	6.2	6.2	-23.6	-1.7	-31.3	0.3	-6.56e-02	-0.8
4912	ok	0.18	9.64e-02	1.46e-02	6.2	6.2	6.2	6.2	0.8	1.7	31.4	-0.5	-0.3	0.9
4913	ok	0.18	0.1	1.46e-02	6.2	6.2	6.2	6.2	-25.3	-1.5	-30.7	0.3	-7.07e-02	-0.8
4914	ok	0.18	9.70e-02	1.45e-02	6.2	6.2	6.2	6.2	3.4	2.1	30.2	-0.5	-0.4	0.9
4915	ok	0.18	0.1	1.44e-02	6.2	6.2	6.2	6.2	-26.5	-1.4	-29.5	0.3	-7.07e-02	-0.7
4916	ok	0.18	9.72e-02	1.43e-02	6.2	6.2	6.2	6.2	-27.7	-1.1	-29.2	-0.6	-0.4	-0.8
4917	ok	0.18	0.1	1.41e-02	6.2	6.2	6.2	6.2	-27.0	-1.5	-27.9	0.3	-6.99e-02	-0.7
4918	ok	0.18	9.61e-02	1.39e-02	6.2	6.2	6.2	6.2	-27.8	-1.3	-27.5	-0.6	-0.3	-0.8
4919	ok	0.18	0.1	1.37e-02	6.2	6.2	6.2	6.2	-26.7	-1.7	-26.6	0.3	-6.49e-02	-0.7
4920	ok	0.18	9.24e-02	1.34e-02	6.2	6.2	6.2	6.2	8.6	1.2	26.2	-0.5	-0.3	0.9
4921	ok	0.18	9.95e-02	1.31e-02	6.2	6.2	6.2	6.2	-25.5	-1.4	-24.7	0.4	-2.68e-02	-0.7
4922	ok	0.18	8.97e-02	1.25e-02	6.2	6.2	6.2	6.2	9.3	1.2	25.1	-0.5	-0.3	0.9
4923	ok	0.18	9.49e-02	1.22e-02	6.2	6.2	6.2	6.2	8.5	-0.7	24.1	-0.2	-0.2	0.7
4924	ok	0.18	8.53e-02	1.15e-02	6.2	6.2	6.2	6.2	8.8	3.4	22.2	-0.5	-0.3	0.8
4925	ok	0.18	9.04e-02	1.12e-02	6.2	6.2	6.2	6.2	-18.5	-0.5	-22.2	0.3	-1.86e-02	-0.7
4926	ok	0.18	8.01e-02	1.02e-02	6.2	6.2	6.2	6.2	7.7	3.0	20.2	-0.5	-0.4	0.8
4927	ok	0.18	8.45e-02	9.46e-03	6.2	6.2	6.2	6.2	4.4	-0.6	21.0	-0.1	-0.2	0.7
4928	ok	0.18	6.76e-02	7.93e-03	6.2	6.2	6.2	6.2	5.2	1.1	17.6	-0.5	-0.3	0.8
4929	ok	0.18	7.12e-02	6.50e-03	6.2	6.2	6.2	6.2	2.0	-2.2	14.3	-9.02e-02	-0.2	0.6
4930	ok	0.18	4.16e-02	4.60e-03	6.2	6.2	6.2	6.2	2.6	-2.2	14.3	-0.4	-0.3	0.6
4931	ok	0.18	4.29e-02	5.37e-03	6.2	6.2	6.2	6.2	0.6	-13.5	6.4	0.7	-3.86e-03	0.4
4932	ok	0.18	4.96e-02	5.95e-03	6.2	6.2	6.2	6.2	2.5	-3.1	4.4	-1.74e-02	-0.2	0.1
4933	ok	0.18	2.99e-02	3.00e-03	6.2	6.2	6.2	6.2	-2.46e-02	0.9	-0.1	-6.25e-02	0.2	-8.99e-02
4934	ok	0.18	3.52e-02	3.28e-03	6.2	6.2	6.2	6.2	-9.03e-02	-2.7	-3.6	0.6	0.5	0.2
4935	ok	0.18	5.34e-02	4.66e-03	6.2	6.2	6.2	6.2	-2.2	4.1	5.7	0.3	0.3	0.4
4936	ok	0.18	6.90e-02	8.07e-03	6.2	6.2	6.2	6.2	-14.8	0.8	-1.7	0.3	0.3	0.6
4937	ok	0.18	8.67e-02	9.82e-03	6.2	6.2	6.2	6.2	10.0	1.2	-20.2	0.2	0.2	-0.8
4938	ok	0.18	8.52e-02	1.15e-02	6.2	6.2	6.2	6.2	8.7	-1.4	-7.03e-02	0.2	0.3	-0.7
4939	ok	0.18	9.57e-02	1.22e-02	6.2	6.2	6.2	6.2	12.2	2.1	-22.3	0.2	0.2	-0.8
4940	ok	0.18	9.03e-02	1.33e-02	6.2	6.2	6.2	6.2	11.0	-1.1	-7.87e-02	0.3	0.3	-0.8
4941	ok	0.18	9.99e-02	1.37e-02	6.2	6.2	6.2	6.2	12.9	2.2	-23.5	0.2	0.2	-0.9
4942	ok	0.18	9.47e-02	1.45e-02	6.2	6.2	6.2	6.2	11.7	-1.2	-0.2	0.3	0.3	-0.8
4943	ok	0.18	0.1	1.48e-02	6.2	6.2	6.2	6.2	12.5	1.8	-24.9	0.2	0.2	-0.9
4944	ok	0.18	9.71e-02	1.55e-02	6.2	6.2	6.2	6.2	10.9	-0.7	-0.4	0.2	0.3	-0.8
4945	ok	0.18	0.1	1.57e-02	6.2	6.2	6.2	6.2	11.2	1.6	-26.3	0.2	0.2	-0.9
4946	ok	0.18	9.85e-02	1.59e-02	6.2	6.2	6.2	6.2	10.6	-1.0	-5.24e-02	0.3	0.3	-0.8
4947	ok	0.18	0.1	1.60e-02	6.2	6.2	6.2	6.2	9.5	1.4	-27.8	0.2	0.2	-0.9
4948	ok	0.18	0.1	1.62e-02	6.2	6.2	6.2	6.2	9.4	-0.9	-0.4	0.3	0.3	-0.8
4949	ok	0.18	0.1	1.63e-02	6.2	6.2	6.2	6.2	7.0	1.3	-29.0	0.2	0.2	-0.9
4950	ok	0.18	0.1	1.62e-02	6.2	6.2	6.2	6.2	7.0	-0.8	-0.7	0.3	0.3	-0.8
4951	ok	0.18	0.1	1.63e-02	6.2	6.2	6.2	6.2	4.0	1.1	-29.9	0.2	0.2	-0.9
4952	ok	0.18	0.1	1.61e-02	6.2	6.2	6.2	6.2	4.1	-0.7	-0.7	0.3	0.3	-0.8
4953	ok	0.18	0.1	1.62e-02	6.2	6.2	6.2	6.2	0.7	0.9	-30.7	0.2	0.3	-0.9
4954	ok	0.18	9.90e-02	1.57e-02	6.2	6.2	6.2	6.2	0.6	-0.7	-0.9	0.3	0.3	-0.8
4955	ok	0.18	0.1	1.58e-02	6.2	6.2	6.2	6.2	-3.0	0.5	-31.6	0.2	0.3	-0.9
4956	ok	0.18	9.70e-02	1.52e-02	6.2	6.2	6.2	6.2	-3.5	-8.82e-02	-1.2	0.2	0.3	-0.8
4957	ok	0.18	9.86e-02	1.52e-02	6.2	6.2	6.2	6.2	-27.8	-1.1	32.1	0.2	0.3	0.9
4958	ok	0.18	9.38e-02	1.45e-02	6.2	6.2	6.2	6.2	-6.5	-0.3	-0.8	0.3	0.3	-0.8
4959	ok	0.18	9.69e-02	1.44e-02	6.2	6.2	6.2	6.2	-12.5	-7.35e-02	-33.0	0.2	0.3	-0.9
4960	ok	0.18	9.24e-02	1.38e-02	6.2	6.2	6.2	6.2	-10.1	-0.1	-0.9	0.3	0.3	-0.8
4961	ok	0.18	9.44e-02	1.38e-02	6.2	6.2	6.2	6.2	-16.2	-0.3	-33.3	0.2	0.3	-0.9
4962	ok	0.18	8.99e-02	1.32e-02	6.2	6.2	6.2	6.2	-13.8	0.3	-1.0	0.3	0.3	-0.8
4963	ok	0.18	9.18e-02	1.39e-02	6.2	6.2	6.2	6.2	-20.3	-0.6	-33.3	0.2	0.3	-0.9
4964	ok	0.18	9.10e-02	1.39e-02	6.2	6.2	6.2	6.2	-17.7	0.4	-1.1	0.3	0.3	-0.8
4965	ok	0.18	9.54e-02	1.45e-02	6.2	6.2	6.2	6.2	-24.1	-0.8	-32.8	0.2	0.3	-0.9
4966	ok	0.18	9.27e-02	1.45e-02	6.2	6.2	6.2	6.2	-6.4	-7.30e-03	0.9	0.3	0.3	0.8
4967	ok	0.18	9.76e-02	1.53e-02	6.2	6.2	6.2	6.2	-9.0	6.24e-02	32.2	0.2	0.3	0.9
4968	ok	0.18	9.58e-02	1.52e-02	6.2	6.2	6.2	6.2	-2.8	-0.5	1.0	0.3	0.3	0.8
4969	ok	0.18	0.1	1.56e-02	6.2	6.2	6.2	6.2	-2.5	0.4	31.3	0.2	0.3	0.9
4970	ok	0.18	9.77e-02	1.57e-02	6.2	6.2	6.2	6.2	1.0	-7.00e-02	1.5	0.2	0.3	0.8
4971	ok	0.18	0.1	1.60e-02	6.2	6.2	6.2	6.2	1.3	0.6	30.2	0.2	0.3	0.9
4972	ok	0.18	9.91e-02	1.61e-02	6.2	6.2	6.2	6.2	4.5	-0.1	1.1	0.3	0.3	0.8
4973	ok	0.18	0.1	1.62e-02	6.2	6.2	6.2	6.2	4.7	0.8	29.4	0.2	0.3	0.9
4974	ok	0.18	0.1	1.62e-02	6.2	6.2	6.2	6.2	7.5	-0.2	1.1	0.3	0.3	0.8
4975	ok	0.18	0.1	1.62e-02	6.2	6.2	6.2	6.2	7.8	1.0	28.5	0.2	0.2	0.9
4976	ok	0.18	0.1	1.62e-02	6.2	6.2	6.2	6.2	9.8	-0.3	0.6	0.3	0.3	0.8
4977	ok	0.18	0.1	1.59e-02	6.2	6.2	6.2	6.2	10.2	1.1	27.3	0.2	0.2	0.9
4978	ok	0.18	9.83e-02	1.60e-02	6.2	6.2	6.2	6.2	10.8	-0.4	0.3	0.2	0.3	0.8
4979	ok	0.18	0.1	1.57e-02	6.2	6.2	6.2	6.2	11.9	1.4	25.9	0.2	0.3	0.9
4980	ok	0.18	9.67e-02	1.55e-02	6.2	6.2	6.2	6.2	11.8	-1.0	8.45e-02	0.3	0.3	0.8
4981	ok	0.18	0.1	1.47e-02	6.2	6.2	6.2	6.2	13.0	1.9	24.7	0.2	0.3	0.9
4982	ok	0.18	9.36e-02	1.47e-02	6.2	6.2	6.2	6.2	11.6	-0.5	0.5	0.2	0.3	0.8
4983	ok	0.18	1.00e-01	1.37e-02	6.2	6.2	6.2	6.2	13.0	2.0	23.2	0.2	0.3	0.9
4984	ok	0.18	8.98e-02	1.35e-02	6.2	6.2	6.2	6.2	11.1	-0.7	0.2	0.3	0.3	0.8

4985	ok	0.18	9.50e-02	1.23e-02	6.2	6.2	6.2	6.2	12.3	1.9	22.2	0.2	0.2	0.8
4986	ok	0.18	8.44e-02	1.17e-02	6.2	6.2	6.2	6.2	8.8	-0.8	0.2	0.2	0.3	0.7
4987	ok	0.18	8.61e-02	9.88e-03	6.2	6.2	6.2	6.2	10.1	1.0	20.0	0.2	0.2	0.8
4988	ok	0.18	6.82e-02	8.23e-03	6.2	6.2	6.2	6.2	-15.0	1.7	1.6	0.2	0.3	-0.6
4989	ok	0.18	5.34e-02	4.71e-03	6.2	6.2	6.2	6.2	-2.2	4.0	-5.9	0.3	0.3	-0.4
4990	ok	0.18	3.56e-02	3.27e-03	6.2	6.2	6.2	6.2	-3.46e-02	-2.7	3.5	0.6	0.5	-0.2
4991	ok	0.18	3.00e-02	3.00e-03	6.2	6.2	6.2	6.2	-4.3	-5.8	4.7	-8.12e-02	-1.42e-02	0.2
4992	ok	0.18	1.43e-02	8.94e-04	6.2	6.2	6.2	6.2	6.53e-02	-0.4	0.4	7.55e-02	8.11e-02	-5.64e-02
4993	ok	0.18	3.44e-02	2.46e-03	6.2	6.2	6.2	6.2	-6.3	-2.1	-2.5	0.4	0.2	0.2
4994	ok	0.18	4.57e-02	5.46e-03	6.2	6.2	6.2	6.2	14.0	1.5	2.5	-0.2	-0.1	-0.5
4995	ok	0.18	4.69e-02	7.17e-03	6.2	6.2	6.2	6.2	11.8	-0.3	2.3	-0.2	-5.43e-02	-0.5
4996	ok	0.18	4.75e-02	8.51e-03	6.2	6.2	6.2	6.2	16.7	1.7	0.8	-8.14e-02	-3.77e-02	-0.6
4997	ok	0.18	4.76e-02	9.18e-03	6.2	6.2	6.2	6.2	15.3	-0.3	0.5	-5.87e-02	-1.88e-02	-0.7
4998	ok	0.18	4.60e-02	1.01e-02	6.2	6.2	6.2	6.2	-31.0	-1.0	-0.2	-5.41e-02	4.46e-02	0.6
4999	ok	0.18	4.86e-02	1.05e-02	6.2	6.2	6.2	6.2	-33.9	0.6	0.1	-6.96e-02	-3.12e-02	0.7
5000	ok	0.18	4.63e-02	1.13e-02	6.2	6.2	6.2	6.2	-35.1	-1.0	-0.1	-7.31e-02	4.13e-02	0.6
5001	ok	0.18	4.85e-02	1.15e-02	6.2	6.2	6.2	6.2	-37.4	0.4	0.2	-7.02e-02	-4.79e-02	0.7
5002	ok	0.18	4.46e-02	1.22e-02	6.2	6.2	6.2	6.2	-38.9	-1.1	-5.63e-02	-8.00e-02	4.04e-02	0.6
5003	ok	0.18	4.62e-02	1.25e-02	6.2	6.2	6.2	6.2	-40.5	0.5	0.7	-8.43e-02	-2.67e-02	0.7
5004	ok	0.18	4.20e-02	1.27e-02	6.2	6.2	6.2	6.2	-41.3	-1.1	0.4	-8.47e-02	3.62e-02	0.7
5005	ok	0.18	4.61e-02	1.27e-02	6.2	6.2	6.2	6.2	-40.6	0.4	1.0	-7.73e-02	-3.72e-02	0.7
5006	ok	0.18	4.04e-02	1.29e-02	6.2	6.2	6.2	6.2	-41.3	-1.0	0.8	-7.62e-02	1.15e-02	0.7
5007	ok	0.18	4.28e-02	1.29e-02	6.2	6.2	6.2	6.2	-40.0	0.4	1.0	-7.37e-02	-1.87e-02	0.7
5008	ok	0.18	3.71e-02	1.28e-02	6.2	6.2	6.2	6.2	-40.8	-0.9	0.8	-7.26e-02	3.01e-02	0.7
5009	ok	0.18	3.73e-02	1.26e-02	6.2	6.2	6.2	6.2	-38.5	0.4	1.0	-7.22e-02	-1.53e-02	0.7
5010	ok	0.18	3.17e-02	1.23e-02	6.2	6.2	6.2	6.2	-39.1	-0.8	0.8	-6.82e-02	5.91e-03	0.7
5011	ok	0.18	3.20e-02	1.19e-02	6.2	6.2	6.2	6.2	-36.0	0.4	1.0	-7.41e-02	-1.11e-02	0.7
5012	ok	0.18	2.56e-02	1.15e-02	6.2	6.2	6.2	6.2	-36.6	-0.6	0.8	-6.57e-02	3.56e-03	0.7
5013	ok	0.18	2.74e-02	1.11e-02	6.2	6.2	6.2	6.2	-33.4	0.3	1.0	-7.08e-02	-2.47e-02	0.8
5014	ok	0.18	2.11e-02	1.06e-02	6.2	6.2	6.2	6.2	-34.1	-0.6	0.7	-6.50e-02	2.18e-02	0.7
5015	ok	0.18	2.26e-02	1.01e-02	6.2	6.2	6.2	6.2	-30.6	0.3	1.1	-8.09e-02	-4.80e-04	0.8
5016	ok	0.18	1.62e-02	9.38e-03	6.2	6.2	6.2	6.2	-30.5	-0.5	0.9	-6.64e-02	1.90e-02	0.7
5017	ok	0.18	1.91e-02	8.76e-03	6.2	6.2	6.2	6.2	-23.3	0.3	1.1	-7.20e-02	4.85e-03	0.8
5018	ok	0.18	1.41e-02	8.79e-03	6.2	6.2	6.2	6.2	-9.9	3.63e-02	-0.7	-8.01e-02	-8.77e-03	-0.7
5019	ok	0.18	1.70e-02	8.77e-03	6.2	6.2	6.2	6.2	-19.2	0.4	1.1	-7.27e-02	8.08e-03	0.8
5020	ok	0.18	1.26e-02	8.89e-03	6.2	6.2	6.2	6.2	-14.7	-0.2	-0.8	-7.98e-02	1.18e-02	-0.7
5021	ok	0.18	1.44e-02	8.91e-03	6.2	6.2	6.2	6.2	-14.7	0.4	-1.0	-5.66e-02	-8.38e-03	-0.8
5022	ok	0.18	1.25e-02	8.92e-03	6.2	6.2	6.2	6.2	-19.4	-0.4	-0.9	-7.80e-02	1.04e-02	-0.7
5023	ok	0.18	1.66e-02	8.88e-03	6.2	6.2	6.2	6.2	-19.3	0.4	-1.1	-5.58e-02	-1.07e-02	-0.8
5024	ok	0.18	1.43e-02	8.83e-03	6.2	6.2	6.2	6.2	-23.6	-0.6	-0.9	-7.88e-02	1.63e-03	-0.7
5025	ok	0.18	1.87e-02	8.82e-03	6.2	6.2	6.2	6.2	-23.4	0.4	-1.1	-5.84e-02	-2.86e-02	-0.8
5026	ok	0.18	1.73e-02	9.39e-03	6.2	6.2	6.2	6.2	-30.5	-0.8	-0.9	-8.20e-02	2.44e-02	-0.7
5027	ok	0.18	2.36e-02	9.97e-03	6.2	6.2	6.2	6.2	-30.2	0.5	-1.1	-6.54e-02	-1.58e-02	-0.8
5028	ok	0.18	2.20e-02	1.04e-02	6.2	6.2	6.2	6.2	-33.6	-0.8	-0.7	-7.59e-02	2.62e-02	-0.7
5029	ok	0.18	2.88e-02	1.10e-02	6.2	6.2	6.2	6.2	-33.1	0.4	-0.9	-6.97e-02	-3.49e-02	-0.8
5030	ok	0.18	2.71e-02	1.13e-02	6.2	6.2	6.2	6.2	-36.2	-1.1	-0.8	-7.89e-02	2.85e-02	-0.7
5031	ok	0.18	3.29e-02	1.18e-02	6.2	6.2	6.2	6.2	-35.7	0.4	-1.0	-7.06e-02	-3.82e-02	-0.8
5032	ok	0.18	3.32e-02	1.21e-02	6.2	6.2	6.2	6.2	-38.7	-1.3	-0.8	-8.01e-02	3.13e-02	-0.7
5033	ok	0.18	3.84e-02	1.25e-02	6.2	6.2	6.2	6.2	-38.2	0.4	-1.0	-7.20e-02	-4.02e-02	-0.8
5034	ok	0.18	3.84e-02	1.26e-02	6.2	6.2	6.2	6.2	-40.4	-1.4	-0.8	-8.29e-02	3.36e-02	-0.7
5035	ok	0.18	4.31e-02	1.28e-02	6.2	6.2	6.2	6.2	-39.8	0.4	-1.0	-7.52e-02	-4.20e-02	-0.7
5036	ok	0.18	4.16e-02	1.27e-02	6.2	6.2	6.2	6.2	-41.1	-1.4	-0.8	-8.15e-02	3.51e-02	-0.7
5037	ok	0.18	4.60e-02	1.27e-02	6.2	6.2	6.2	6.2	-40.5	0.4	-1.0	-7.78e-02	-4.29e-02	-0.7
5038	ok	0.18	4.30e-02	1.26e-02	6.2	6.2	6.2	6.2	-41.0	-1.3	-0.5	-9.06e-02	3.93e-02	-0.7
5039	ok	0.18	4.82e-02	1.23e-02	6.2	6.2	6.2	6.2	-40.1	0.5	-0.7	-7.76e-02	-4.74e-02	-0.7
5040	ok	0.18	4.50e-02	1.21e-02	6.2	6.2	6.2	6.2	-38.5	-1.2	5.39e-02	-8.17e-02	4.18e-02	-0.7
5041	ok	0.18	4.77e-02	1.15e-02	6.2	6.2	6.2	6.2	-37.4	0.3	-0.2	-7.67e-02	-3.32e-02	-0.7
5042	ok	0.18	4.54e-02	1.11e-02	6.2	6.2	6.2	6.2	-35.0	-1.4	9.94e-02	-8.43e-02	4.60e-02	-0.6
5043	ok	0.18	4.81e-02	1.05e-02	6.2	6.2	6.2	6.2	-33.9	0.4	-0.2	-6.84e-02	-5.44e-02	-0.7
5044	ok	0.18	4.49e-02	1.00e-02	6.2	6.2	6.2	6.2	-31.1	-1.6	0.2	-6.91e-02	4.88e-02	-0.6
5045	ok	0.18	4.64e-02	9.18e-03	6.2	6.2	6.2	6.2	15.0	-0.5	-0.5	-6.47e-02	-1.22e-02	0.7
5046	ok	0.18	4.60e-02	8.43e-03	6.2	6.2	6.2	6.2	16.3	0.9	-0.8	-6.08e-02	-4.82e-02	0.6
5047	ok	0.18	4.53e-02	7.17e-03	6.2	6.2	6.2	6.2	11.3	-0.3	-2.4	-0.2	-4.29e-02	0.5
5048	ok	0.18	4.44e-02	5.35e-03	6.2	6.2	6.2	6.2	13.5	1.0	-2.6	-0.2	-0.1	0.5
5049	ok	0.18	3.34e-02	2.31e-03	6.2	6.2	6.2	6.2	-5.9	-1.7	2.4	0.5	0.2	-0.2
5050	ok	0.18	1.36e-02	8.77e-04	6.2	6.2	6.2	6.2	4.87e-03	-0.5	-0.4	8.32e-02	7.82e-02	6.01e-02

Nodo	**x/d**	**V N/M**	**ver. rid**	**Af pr-**	**Af pr+**	**Af sec-**	**Af sec+**	**N x**	**N y**	**N xy**	**M x**	**M y**	**M xy**
								-41.33	-32.89	-36.75	-9.56	-11.07	-4.43
	0.18	0.84	0.02	6.22	6.22	6.22	6.22	38.08	26.79	34.08	27.08	18.25	4.44

Nodo	**Stato**	**Max tau**	**Ver V pr**	**Ver V sec**	**Af V pr**	**Af V sec**	**V pr**	**V sec**
		daN/cm2					kN/ m	kN/ m
4076	ok	0.0						
4077	ok	0.0						
4078	ok	3.88						
4079	ok	2.16						

4080	ok	1.28						
4081	ok	0.81						
4082	ok	1.08						
4083	ok	1.69						
4084	ok	2.18						
4085	ok	2.81						
4086	ok Av	4.95	0.23	8.37e-03	5.6	0.2	78.1	2.9
4087	ok	0.0						
4088	ok	4.68						
4089	ok	3.11						
4090	ok	2.48						
4091	ok	1.88						
4092	ok	1.32						
4093	ok	0.79						
4094	ok	1.40						
4095	ok	1.98						
4096	ok	2.52						
4097	ok	3.12						
4098	ok Av	4.98	0.23	8.15e-03	5.7	0.2	78.6	2.8
4099	ok	0.0						
4100	ok	4.89						
4101	ok	3.09						
4102	ok	2.49						
4103	ok	1.93						
4104	ok	1.38						
4105	ok	0.78						
4106	ok	1.37						
4107	ok	1.93						
4108	ok	2.48						
4109	ok	3.08						
4110	ok	4.89						
4111	ok	0.0						
4112	ok Av	4.98	0.23	7.66e-03	5.6	0.2	78.6	2.7
4113	ok	3.13						
4114	ok	2.54						
4115	ok	1.98						
4116	ok	1.41						
4117	ok	0.79						
4118	ok	1.31						
4119	ok	1.87						
4120	ok	2.47						
4121	ok	3.10						
4122	ok	4.69						
4123	ok	0.0						
4124	ok Av	4.95	0.23	7.86e-03	5.6	0.2	78.1	2.7
4125	ok	2.82						
4126	ok	2.19						
4127	ok	1.69						
4128	ok	1.08						
4129	ok	0.80						
4130	ok	1.28						
4131	ok	2.15						
4132	ok	3.88						
4133	ok	0.0						
4134	ok	0.0						
4135	ok	0.0						
4136	ok	0.0						
4137	ok	0.0						
4138	ok	0.68						
4139	ok	0.42						
4140	ok	0.31						
4141	ok	0.30						
4142	ok	0.41						
4143	ok	0.60						
4144	ok	0.93						
4145	ok	0.0						
4146	ok	0.0						
4147	ok	0.0						
4148	ok	0.93						
4149	ok	0.59						
4150	ok	0.53						
4151	ok	0.39						
4152	ok	0.25						
4153	ok	0.39						
4154	ok	0.53						
4155	ok	0.61						
4156	ok	0.95						
4157	ok	0.0						
4158	ok	0.0						

4159	ok	0.0
4160	ok	0.96
4161	ok	0.61
4162	ok	0.52
4163	ok	0.39
4164	ok	0.25
4165	ok	0.38
4166	ok	0.52
4167	ok	0.61
4168	ok	0.96
4169	ok	0.0
4170	ok	0.0
4171	ok	0.0
4172	ok	0.95
4173	ok	0.62
4174	ok	0.53
4175	ok	0.40
4176	ok	0.25
4177	ok	0.38
4178	ok	0.53
4179	ok	0.58
4180	ok	0.92
4181	ok	0.0
4182	ok	0.0
4183	ok	0.0
4184	ok	0.93
4185	ok	0.60
4186	ok	0.41
4187	ok	0.30
4188	ok	0.31
4189	ok	0.42
4190	ok	0.68
4191	ok	0.0
4192	ok	0.0
4193	ok	0.0
4194	ok	3.90
4195	ok	3.84
4196	ok	1.96
4197	ok	0.65
4198	ok	0.30
4199	ok	0.22
4200	ok	0.27
4201	ok	0.37
4202	ok	0.52
4203	ok	1.04
4204	ok	3.25
4205	ok	4.38
4206	ok	2.90
4207	ok	0.96
4208	ok	0.48
4209	ok	0.37
4210	ok	0.29
4211	ok	0.24
4212	ok	0.30
4213	ok	0.38
4214	ok	0.51
4215	ok	1.03
4216	ok	3.16
4217	ok	4.22
4218	ok	3.14
4219	ok	1.02
4220	ok	0.50
4221	ok	0.38
4222	ok	0.29
4223	ok	0.23
4224	ok	0.29
4225	ok	0.38
4226	ok	0.50
4227	ok	1.02
4228	ok	3.12
4229	ok	4.22
4230	ok	3.17
4231	ok	1.03
4232	ok	0.51
4233	ok	0.38
4234	ok	0.30
4235	ok	0.24
4236	ok	0.29
4237	ok	0.37

4238	ok	0.48
4239	ok	0.96
4240	ok	2.88
4241	ok	4.42
4242	ok	3.25
4243	ok	1.04
4244	ok	0.52
4245	ok	0.37
4246	ok	0.27
4247	ok	0.22
4248	ok	0.30
4249	ok	0.65
4250	ok	1.94
4251	ok	3.80
4252	ok	3.90
4253	ok	3.94
4254	ok	0.76
4255	ok	0.79
4256	ok	0.41
4257	ok	0.37
4258	ok	0.36
4259	ok	0.38
4260	ok	0.40
4261	ok	0.43
4262	ok	0.54
4263	ok	1.07
4264	ok	0.67
4265	ok	1.00
4266	ok	0.55
4267	ok	0.44
4268	ok	0.42
4269	ok	0.41
4270	ok	0.39
4271	ok	0.41
4272	ok	0.42
4273	ok	0.44
4274	ok	0.55
4275	ok	1.04
4276	ok	0.67
4277	ok	1.02
4278	ok	0.56
4279	ok	0.44
4280	ok	0.42
4281	ok	0.41
4282	ok	0.39
4283	ok	0.41
4284	ok	0.42
4285	ok	0.44
4286	ok	0.56
4287	ok	1.02
4288	ok	0.66
4289	ok	1.04
4290	ok	0.56
4291	ok	0.44
4292	ok	0.42
4293	ok	0.41
4294	ok	0.39
4295	ok	0.41
4296	ok	0.42
4297	ok	0.44
4298	ok	0.54
4299	ok	1.00
4300	ok	0.66
4301	ok	1.07
4302	ok	0.54
4303	ok	0.43
4304	ok	0.40
4305	ok	0.38
4306	ok	0.36
4307	ok	0.37
4308	ok	0.41
4309	ok	0.78
4310	ok	0.76
4311	ok	3.93
4312	ok	2.54
4313	ok	2.01
4314	ok	1.00
4315	ok	0.68
4316	ok	0.58

4317	ok	0.55
4318	ok	0.59
4319	ok	0.56
4320	ok	0.56
4321	ok	0.68
4322	ok	1.13
4323	ok	1.59
4324	ok	1.16
4325	ok	0.74
4326	ok	0.58
4327	ok	0.59
4328	ok	0.63
4329	ok	0.59
4330	ok	0.63
4331	ok	0.59
4332	ok	0.57
4333	ok	0.72
4334	ok	1.12
4335	ok	1.55
4336	ok	1.13
4337	ok	0.75
4338	ok	0.57
4339	ok	0.58
4340	ok	0.62
4341	ok	0.58
4342	ok	0.62
4343	ok	0.58
4344	ok	0.57
4345	ok	0.75
4346	ok	1.13
4347	ok	1.56
4348	ok	1.12
4349	ok	0.72
4350	ok	0.57
4351	ok	0.59
4352	ok	0.63
4353	ok	0.59
4354	ok	0.63
4355	ok	0.59
4356	ok	0.58
4357	ok	0.74
4358	ok	1.17
4359	ok	1.60
4360	ok	1.13
4361	ok	0.69
4362	ok	0.56
4363	ok	0.56
4364	ok	0.59
4365	ok	0.55
4366	ok	0.58
4367	ok	0.68
4368	ok	1.00
4369	ok	2.01
4370	ok	2.54
4579	ok	1.92
4580	ok	3.57
4581	ok	2.06
4582	ok	0.88
4583	ok	0.80
4584	ok	0.88
4585	ok	0.76
4586	ok	0.88
4587	ok	0.77
4588	ok	0.68
4589	ok	1.74
4590	ok	4.01
4591	ok	1.94
4592	ok	0.75
4593	ok	0.83
4594	ok	0.94
4595	ok	0.79
4596	ok	0.91
4597	ok	0.79
4598	ok	0.93
4599	ok	0.81
4600	ok	0.72
4601	ok	1.80
4602	ok	3.90
4603	ok	1.89

4604	ok	0.73
4605	ok	0.81
4606	ok	0.93
4607	ok	0.79
4608	ok	0.90
4609	ok	0.79
4610	ok	0.93
4611	ok	0.81
4612	ok	0.72
4613	ok	1.89
4614	ok	3.91
4615	ok	1.81
4616	ok	0.72
4617	ok	0.81
4618	ok	0.93
4619	ok	0.79
4620	ok	0.91
4621	ok	0.79
4622	ok	0.94
4623	ok	0.82
4624	ok	0.75
4625	ok	1.94
4626	ok	4.02
4627	ok	1.75
4628	ok	0.68
4629	ok	0.77
4630	ok	0.88
4631	ok	0.75
4632	ok	0.88
4633	ok	0.80
4634	ok	0.87
4635	ok	2.06
4636	ok	3.56
4637	ok	1.91
4638	ok	2.28
4639	ok	4.19
4640	ok	1.77
4641	ok	0.99
4642	ok	1.44
4643	ok	1.33
4644	ok	1.46
4645	ok	1.24
4646	ok	1.22
4647	ok	0.89
4648	ok	1.93
4649	ok	4.80
4650	ok	2.01
4651	ok	0.88
4652	ok	1.31
4653	ok	1.28
4654	ok	1.60
4655	ok	1.46
4656	ok	1.59
4657	ok	1.29
4658	ok	1.28
4659	ok	0.89
4660	ok	1.91
4661	ok	4.66
4662	ok	1.96
4663	ok	0.87
4664	ok	1.27
4665	ok	1.26
4666	ok	1.57
4667	ok	1.42
4668	ok	1.58
4669	ok	1.27
4670	ok	1.27
4671	ok	0.87
4672	ok	1.96
4673	ok	4.67
4674	ok	1.91
4675	ok	0.89
4676	ok	1.28
4677	ok	1.29
4678	ok	1.60
4679	ok	1.45
4680	ok	1.60
4681	ok	1.29
4682	ok	1.31

4683	ok	0.89
4684	ok	2.01
4685	ok	4.81
4686	ok	1.94
4687	ok	0.88
4688	ok	1.22
4689	ok	1.23
4690	ok	1.47
4691	ok	1.33
4692	ok	1.44
4693	ok	1.00
4694	ok	1.76
4695	ok	4.18
4696	ok	2.28
4697	ok	2.72
4698	ok	2.20
4699	ok	1.25
4700	ok	2.87
4701	ok	1.28
4702	ok	3.90
4703	ok	1.49
4704	ok	3.60
4705	ok	1.38
4706	ok	2.17
4707	ok	1.12
4708	ok	2.15
4709	ok	1.29
4710	ok	2.33
4711	ok	1.27
4712	ok	3.89
4713	ok	1.43
4714	ok	4.49
4715	ok	1.48
4716	ok	3.86
4717	ok	1.34
4718	ok	2.20
4719	ok	1.21
4720	ok	2.12
4721	ok	1.24
4722	ok	2.20
4723	ok	1.30
4724	ok	3.77
4725	ok	1.44
4726	ok	4.38
4727	ok	1.44
4728	ok	3.79
4729	ok	1.30
4730	ok	2.18
4731	ok	1.23
4732	ok	2.11
4733	ok	1.22
4734	ok	2.18
4735	ok	1.33
4736	ok	3.85
4737	ok	1.48
4738	ok	4.49
4739	ok	1.43
4740	ok	3.89
4741	ok	1.27
4742	ok	2.32
4743	ok	1.29
4744	ok	2.15
4745	ok	1.14
4746	ok	2.15
4747	ok	1.38
4748	ok	3.59
4749	ok	1.49
4750	ok	3.90
4751	ok	1.29
4752	ok	2.87
4753	ok	1.25
4754	ok	2.20
4755	ok	2.70
4756	ok	1.38
4757	ok	0.56
4758	ok	0.85
4759	ok	1.60
4760	ok	1.20
4761	ok	2.14

4762	ok	1.30
4763	ok	2.16
4764	ok	1.16
4765	ok	1.65
4766	ok	0.93
4767	ok	0.88
4768	ok	0.85
4769	ok	1.56
4770	ok	1.21
4771	ok	2.10
4772	ok	1.42
4773	ok	2.30
4774	ok	1.46
4775	ok	2.21
4776	ok	1.24
4777	ok	1.65
4778	ok	0.91
4779	ok	0.86
4780	ok	0.87
4781	ok	1.59
4782	ok	1.20
4783	ok	2.13
4784	ok	1.41
4785	ok	2.24
4786	ok	1.42
4787	ok	2.14
4788	ok	1.20
4789	ok	1.59
4790	ok	0.87
4791	ok	0.84
4792	ok	0.90
4793	ok	1.64
4794	ok	1.23
4795	ok	2.20
4796	ok	1.46
4797	ok	2.29
4798	ok	1.43
4799	ok	2.11
4800	ok	1.22
4801	ok	1.58
4802	ok	0.86
4803	ok	0.86
4804	ok	0.92
4805	ok	1.64
4806	ok	1.16
4807	ok	2.16
4808	ok	1.30
4809	ok	2.13
4810	ok	1.21
4811	ok	1.61
4812	ok	0.86
4813	ok	0.57
4814	ok	1.37
4815	ok	0.31
4816	ok	0.36
4817	ok	0.38
4818	ok	0.28
4819	ok	0.42
4820	ok	0.25
4821	ok	0.41
4822	ok	0.26
4823	ok	0.38
4824	ok	0.31
4825	ok	0.35
4826	ok	0.31
4827	ok	0.34
4828	ok	0.28
4829	ok	0.38
4830	ok	0.25
4831	ok	0.40
4832	ok	0.26
4833	ok	0.40
4834	ok	0.25
4835	ok	0.38
4836	ok	0.30
4837	ok	0.34
4838	ok	0.30
4839	ok	0.32
4840	ok	0.28

4841	ok	0.37
4842	ok	0.24
4843	ok	0.39
4844	ok	0.26
4845	ok	0.39
4846	ok	0.25
4847	ok	0.37
4848	ok	0.28
4849	ok	0.32
4850	ok	0.30
4851	ok	0.33
4852	ok	0.29
4853	ok	0.38
4854	ok	0.25
4855	ok	0.40
4856	ok	0.25
4857	ok	0.40
4858	ok	0.25
4859	ok	0.38
4860	ok	0.28
4861	ok	0.34
4862	ok	0.31
4863	ok	0.34
4864	ok	0.30
4865	ok	0.38
4866	ok	0.26
4867	ok	0.40
4868	ok	0.24
4869	ok	0.42
4870	ok	0.27
4871	ok	0.38
4872	ok	0.36
4873	ok	0.30
4874	ok	0.22
4875	ok	0.20
4876	ok	0.27
4877	ok	0.19
4878	ok	0.24
4879	ok	0.19
4880	ok	0.24
4881	ok	0.18
4882	ok	0.24
4883	ok	0.17
4884	ok	0.25
4885	ok	0.15
4886	ok	0.25
4887	ok	0.18
4888	ok	0.24
4889	ok	0.18
4890	ok	0.24
4891	ok	0.18
4892	ok	0.24
4893	ok	0.17
4894	ok	0.24
4895	ok	0.15
4896	ok	0.25
4897	ok	0.13
4898	ok	0.25
4899	ok	0.16
4900	ok	0.24
4901	ok	0.16
4902	ok	0.24
4903	ok	0.16
4904	ok	0.24
4905	ok	0.16
4906	ok	0.24
4907	ok	0.16
4908	ok	0.25
4909	ok	0.13
4910	ok	0.25
4911	ok	0.14
4912	ok	0.24
4913	ok	0.16
4914	ok	0.24
4915	ok	0.17
4916	ok	0.24
4917	ok	0.17
4918	ok	0.25
4919	ok	0.16

4920	ok	0.25
4921	ok	0.15
4922	ok	0.25
4923	ok	0.15
4924	ok	0.25
4925	ok	0.18
4926	ok	0.24
4927	ok	0.18
4928	ok	0.24
4929	ok	0.18
4930	ok	0.28
4931	ok	0.20
4932	ok	0.22
4933	ok	0.24
4934	ok	0.23
4935	ok	0.14
4936	ok	0.13
4937	ok	0.12
4938	ok	0.13
4939	ok	0.12
4940	ok	0.13
4941	ok	0.12
4942	ok	0.13
4943	ok	0.12
4944	ok	0.13
4945	ok	0.12
4946	ok	0.13
4947	ok	0.12
4948	ok	0.12
4949	ok	0.11
4950	ok	0.12
4951	ok	0.11
4952	ok	0.12
4953	ok	0.11
4954	ok	0.12
4955	ok	0.12
4956	ok	0.12
4957	ok	0.11
4958	ok	0.12
4959	ok	0.11
4960	ok	0.12
4961	ok	0.11
4962	ok	0.13
4963	ok	0.12
4964	ok	0.13
4965	ok	0.12
4966	ok	0.13
4967	ok	0.12
4968	ok	0.13
4969	ok	0.12
4970	ok	0.13
4971	ok	0.13
4972	ok	0.13
4973	ok	0.13
4974	ok	0.13
4975	ok	0.13
4976	ok	0.13
4977	ok	0.13
4978	ok	0.13
4979	ok	0.12
4980	ok	0.13
4981	ok	0.13
4982	ok	0.13
4983	ok	0.13
4984	ok	0.13
4985	ok	0.13
4986	ok	0.14
4987	ok	0.13
4988	ok	0.14
4989	ok	0.14
4990	ok	0.24
4991	ok	0.25
4992	ok	0.14
4993	ok	0.35
4994	ok	0.45
4995	ok	0.52
4996	ok	0.52
4997	ok	0.55
4998	ok	0.54

4999	ok	0.56
5000	ok	0.55
5001	ok	0.56
5002	ok	0.55
5003	ok	0.56
5004	ok	0.55
5005	ok	0.57
5006	ok	0.56
5007	ok	0.57
5008	ok	0.56
5009	ok	0.57
5010	ok	0.56
5011	ok	0.57
5012	ok	0.57
5013	ok	0.58
5014	ok	0.57
5015	ok	0.58
5016	ok	0.57
5017	ok	0.57
5018	ok	0.57
5019	ok	0.57
5020	ok	0.57
5021	ok	0.57
5022	ok	0.57
5023	ok	0.57
5024	ok	0.56
5025	ok	0.56
5026	ok	0.56
5027	ok	0.56
5028	ok	0.56
5029	ok	0.56
5030	ok	0.56
5031	ok	0.56
5032	ok	0.56
5033	ok	0.56
5034	ok	0.55
5035	ok	0.56
5036	ok	0.55
5037	ok	0.55
5038	ok	0.55
5039	ok	0.55
5040	ok	0.55
5041	ok	0.55
5042	ok	0.54
5043	ok	0.54
5044	ok	0.53
5045	ok	0.53
5046	ok	0.52
5047	ok	0.51
5048	ok	0.44
5049	ok	0.35
5050	ok	0.14

Nodo	Max tau	Ver V pr	Ver V sec	Af V pr	Af V sec	V pr	V sec
	4.98	0.23	8.37e-03	5.65	0.21	78.63	2.90

Nodo	Stato	V 6.47	V 6.53	Beta	f. a fon	f. Uout	Aw tot	Asw,min	n. x serie	n.ser 0(R)	n.ser 90	Rif. cmb
							cm2	cm2				
4136	ok	0.17	0.05	1.60	0.0	0.0	0.0	0.0	0	0	0	146
4146	ok	0.31	0.10	1.36	0.0	0.0	0.0	0.0	0	0	0	146
4158	ok	0.31	0.10	1.33	0.0	0.0	0.0	0.0	0	0	0	146
4170	ok	0.31	0.10	1.33	0.0	0.0	0.0	0.0	0	0	0	140
4182	ok	0.31	0.10	1.36	0.0	0.0	0.0	0.0	0	0	0	140
4192	ok	0.17	0.05	1.60	0.0	0.0	0.0	0.0	0	0	0	140

STATI LIMITE D' ESERCIZIO

LEGENDA TABELLA STATI LIMITE D' ESERCIZIO

In tabella vengono riportati i valori di interesse per il controllo degli stati limite d'esercizio.

In particolare vengono riportati, in relazione al tipo di elemento strutturale, i risultati relativi alle tre categorie di combinazione considerate:

- Combinazioni rare
- Combinazioni frequenti
- Combinazioni quasi permanenti.

I valori di interesse sono i seguenti:

rRfck	rapporto tra la massima compressione nel calcestruzzo e la tensione fck in combinazioni rare [*normalizzato a 1*]
rRfyk	rapporto tra la massima tensione nell'acciaio e la tensione fyk in combinazioni rare [*normalizzato a 1*]
rPfck	rapporto tra la massima compressione nel calcestruzzo e la tensione fck in combinazioni quasi permanenti [*normalizzato a 1*]
wR	apertura caratteristica delle fessure in combinazioni rare [*mm*]
wF	apertura caratteristica delle fessure in combinazioni frequenti [*mm*]
wP	apertura caratteristica delle fessure in combinazioni quasi permanenti [*mm*]
dR	massima deformazione in combinazioni rare
dF	massima deformazione in combinazioni frequenti
dP	massima deformazione in combinazioni quasi permanenti

Per ognuno dei nove valori soprariportati viene indicata (Rif.cmb) la combinazione in cui si è verificato.

In relazione al tipo di elemento strutturale i valori sono selezionati nel modo seguente:

pilastri	**rRfck**	**rRfyk**	**rPfck**	per sezioni significative
travi	**rRfck** **wR** **dR**	**rRfyk** **wF** **dF**	**rPfck** **wP** **dP**	per sezioni significative per sezioni significative massimi in campata
setti e gusci	**rRfck** **wR**	**rRfyk** **wF**	**rPfck** **wP**	massimi nei nodi dell'elemento massimi nei nodi dell'elemento

Si precisa che i valori di massima deformazione per travi sono riferiti al piano verticale (piano locale 1-2 con momenti flettenti 3-3).

Pilas.	Pos.	rRfck	rRfyk	rPfck	Rif. cmb	Pos.	rRfck	rRfyk	rPfck	Rif. cmb
	cm					cm				
1	0.0	0.04	0.02	0.05	176,176,199	184.5	0.04	0.02	0.04	172,172,197
	369.0	0.09	0.05	0.11	172,172,197					
2	0.0	0.06	0.04	0.08	176,176,199	184.5	0.04	0.03	0.05	172,172,197
	369.0	0.06	0.04	0.08	172,172,197					
3	0.0	0.05	0.03	0.07	176,176,199	184.5	0.04	0.03	0.05	172,172,197
	369.0	0.05	0.03	0.06	172,172,197					
4	0.0	0.05	0.03	0.06	176,176,199	184.5	0.04	0.03	0.05	172,172,197
	369.0	0.05	0.03	0.06	172,172,197					
5	0.0	0.06	0.03	0.07	176,176,199	184.5	0.04	0.03	0.05	172,172,197
	369.0	0.06	0.04	0.08	172,172,197					
6	0.0	0.04	0.02	0.05	176,176,199	184.5	0.04	0.02	0.05	172,172,197
	369.0	0.09	0.04	0.11	172,172,197					
27	0.0	0.11	0.08	0.13	172,172,197	45.0	0.06	0.03	0.07	172,172,197
28	0.0	0.07	0.04	0.08	172,172,197	45.0	0.05	0.03	0.06	172,172,197
29	0.0	0.04	0.03	0.05	172,172,197	45.0	0.04	0.02	0.05	172,172,197
30	0.0	0.04	0.03	0.05	172,172,197	45.0	0.04	0.03	0.05	172,172,197
31	0.0	0.06	0.03	0.08	172,172,197	45.0	0.05	0.03	0.06	172,172,197
32	0.0	0.11	0.07	0.13	172,172,197	45.0	0.06	0.03	0.07	172,172,197

Pilas.	rRfck	rRfyk	rPfck	rRfck	rRfyk	rPfck
	0.11	0.08	0.13			

Trave	Pos.	rRfck	rRfyk	rPfck	Rif. cmb	wR	wF	wP	Rif. cmb	dR	dF	dP	Rif. cmb
	cm					mm	mm	mm		cm	cm	cm	
7	0.0	5.32e-03	5.39e-03	7.10e-03	161,161,199	0.0	0.0	0.0	0,0,0	-0.06	-0.06	-0.06	172,193,197
	57.7	7.51e-03	7.46e-03	0.01	161,161,199	0.0	0.0	0.0	0,0,0				
8	0.0	7.51e-03	7.46e-03	0.01	161,161,199	0.0	0.0	0.0	0,0,0	0.05	0.05	0.05	176,195,199
	57.7	5.32e-03	5.39e-03	7.10e-03	161,161,199	0.0	0.0	0.0	0,0,0				
9	0.0	8.79e-03	8.96e-03	0.01	161,161,199	0.0	0.0	0.0	0,0,0	-0.06	-0.06	-0.06	172,193,197
	57.7	0.01	0.01	0.02	161,161,199	0.0	0.0	0.0	0,0,0				
10	0.0	0.01	0.01	0.02	161,161,199	0.0	0.0	0.0	0,0,0	0.05	0.05	0.05	172,193,197
	57.7	8.79e-03	8.96e-03	0.01	161,161,199	0.0	0.0	0.0	0,0,0				
11	0.0	9.11e-03	9.29e-03	0.01	161,161,199	0.0	0.0	0.0	0,0,0	-0.04	-0.04	-0.04	172,193,197
	57.7	0.01	0.01	0.02	161,161,199	0.0	0.0	0.0	0,0,0				
12	0.0	0.01	0.01	0.02	161,161,199	0.0	0.0	0.0	0,0,0	0.04	0.04	0.04	172,193,197
	57.7	9.11e-03	9.29e-03	0.01	161,161,199	0.0	0.0	0.0	0,0,0				
13	0.0	8.79e-03	8.96e-03	0.01	161,161,199	0.0	0.0	0.0	0,0,0	-0.05	-0.05	-0.05	172,193,197
	57.7	0.01	0.01	0.02	161,161,199	0.0	0.0	0.0	0,0,0				
14	0.0	0.01	0.01	0.02	161,161,199	0.0	0.0	0.0	0,0,0	0.06	0.06	0.06	172,193,197
	57.7	8.79e-03	8.96e-03	0.01	161,161,199	0.0	0.0	0.0	0,0,0				
15	0.0	5.32e-03	5.39e-03	7.10e-03	161,161,199	0.0	0.0	0.0	0,0,0	-0.05	-0.05	-0.04	176,195,199
	57.7	7.51e-03	7.46e-03	0.01	161,161,199	0.0	0.0	0.0	0,0,0				
16	0.0	7.51e-03	7.46e-03	0.01	161,161,199	0.0	0.0	0.0	0,0,0	0.06	0.06	0.06	172,193,197
	57.7	5.32e-03	5.39e-03	7.10e-03	161,161,199	0.0	0.0	0.0	0,0,0				
17	0.0	7.51e-03	7.46e-03	0.01	161,161,199	0.0	0.0	0.0	0,0,0	-0.06	-0.06	-0.06	172,193,197
	57.7	8.30e-03	8.19e-03	0.01	172,172,197	0.0	0.0	0.0	0,0,0				
18	0.0	8.30e-03	8.19e-03	0.01	172,172,197	0.0	0.0	0.0	0,0,0	0.05	0.05	0.05	176,195,199
	57.7	7.51e-03	7.46e-03	0.01	161,161,199	0.0	0.0	0.0	0,0,0				
19	0.0	0.01	0.01	0.02	161,161,199	0.0	0.0	0.0	0,0,0	-0.06	-0.06	-0.06	172,193,197
	57.7	0.01	0.01	0.02	172,172,197	0.0	0.0	0.0	0,0,0				
20	0.0	0.01	0.01	0.02	172,172,197	0.0	0.0	0.0	0,0,0	0.05	0.05	0.05	172,193,197
	57.7	0.01	0.01	0.02	161,161,199	0.0	0.0	0.0	0,0,0				
21	0.0	0.01	0.01	0.02	161,161,199	0.0	0.0	0.0	0,0,0	-0.04	-0.04	-0.04	172,193,197
	57.7	0.01	0.01	0.02	172,172,197	0.0	0.0	0.0	0,0,0				
22	0.0	0.01	0.01	0.02	172,172,197	0.0	0.0	0.0	0,0,0	0.04	0.04	0.04	172,193,197
	57.7	0.01	0.01	0.02	161,161,199	0.0	0.0	0.0	0,0,0				
23	0.0	0.01	0.01	0.02	161,161,199	0.0	0.0	0.0	0,0,0	-0.05	-0.05	-0.05	

172,193,197
57.7 0.01 0.01 0.02172,172,197 0.0 0.0 0.0 0,0,0
24 0.0 0.01 0.01 0.02172,172,197 0.0 0.0 0.0 0,0,0 0.06 0.06 0.06
172,193,197
57.7 0.01 0.01 0.02161,161,199 0.0 0.0 0.0 0,0,0
25 0.0 7.51e-03 7.46e-03 0.01161,161,199 0.0 0.0 0.0 0,0,0 -0.05 -0.05 -0.04
176,195,199
57.7 8.30e-03 8.19e-03 0.01172,172,197 0.0 0.0 0.0 0,0,0
26 0.0 8.30e-03 8.19e-03 0.01172,172,197 0.0 0.0 0.0 0,0,0 0.06 0.06 0.06
172,193,197
57.7 7.51e-03 7.46e-03 0.01161,161,199 0.0 0.0 0.0 0,0,0
33 0.0 0.06 0.05 0.08172,172,197 0.0 0.0 0.0 0,0,0 -0.02 -0.02 -0.02
172,193,197
57.7 0.05 0.04 0.06172,172,197 0.0 0.0 0.0 0,0,0
34 0.0 0.05 0.04 0.06172,172,197 0.0 0.0 0.0 0,0,0 -0.02 -0.02 -0.02
176,195,199
57.7 0.06 0.05 0.08172,172,197 0.0 0.0 0.0 0,0,0
35 0.0 0.01 0.01 0.02172,172,197 0.0 0.0 0.0 0,0,0 -0.06 -0.06 -0.06
172,193,197
57.7 0.01 0.01 0.02172,172,197 0.0 0.0 0.0 0,0,0
36 0.0 0.01 0.01 0.02172,172,197 0.0 0.0 0.0 0,0,0 0.05 0.05 0.05
172,193,197
57.7 0.01 0.01 0.02172,172,197 0.0 0.0 0.0 0,0,0
37 0.0 0.01 0.01 0.02172,172,197 0.0 0.0 0.0 0,0,0 -0.04 -0.04 -0.04
172,193,197
57.7 0.01 0.01 0.02172,172,197 0.0 0.0 0.0 0,0,0
38 0.0 0.01 0.01 0.02172,172,197 0.0 0.0 0.0 0,0,0 0.04 0.04 0.04
172,193,197
57.7 0.01 0.01 0.02172,172,197 0.0 0.0 0.0 0,0,0
39 0.0 0.01 0.01 0.02172,172,197 0.0 0.0 0.0 0,0,0 -0.05 -0.05 -0.05
172,193,197
57.7 0.01 0.01 0.02172,172,197 0.0 0.0 0.0 0,0,0
40 0.0 0.01 0.01 0.02172,172,197 0.0 0.0 0.0 0,0,0 0.06 0.06 0.06
172,193,197
57.7 0.01 0.01 0.02172,172,197 0.0 0.0 0.0 0,0,0
41 0.0 0.06 0.05 0.08172,172,197 0.0 0.0 0.0 0,0,0 -0.02 -0.02 -0.02
176,195,199
57.7 0.05 0.04 0.06172,172,197 0.0 0.0 0.0 0,0,0
42 0.0 0.05 0.04 0.06172,172,197 0.0 0.0 0.0 0,0,0 -0.02 -0.02 -0.02
172,193,197
57.7 0.06 0.05 0.08172,172,197 0.0 0.0 0.0 0,0,0
43 0.0 0.05 0.04 0.06172,172,197 0.0 0.0 0.0 0,0,0 -0.02 -0.02 -0.02
172,193,197
57.7 0.03 0.03 0.04172,172,197 0.0 0.0 0.0 0,0,0
44 0.0 0.03 0.03 0.04172,172,197 0.0 0.0 0.0 0,0,0 -0.02 -0.02 -0.02
176,195,199
57.7 0.05 0.04 0.06172,172,197 0.0 0.0 0.0 0,0,0
45 0.0 0.06 0.05 0.09172,172,197 0.0 0.0 0.0 0,0,0 -9.72e-03 -9.53e-03 -9.50e-03
172,193,197
57.7 0.04 0.03 0.05172,172,197 0.0 0.0 0.0 0,0,0
46 0.0 0.04 0.03 0.05172,172,197 0.0 0.0 0.0 0,0,0 -9.72e-03 -9.53e-03 -9.50e-03
172,193,197
57.7 0.06 0.05 0.09172,172,197 0.0 0.0 0.0 0,0,0
47 0.0 0.06 0.05 0.08172,172,197 0.0 0.0 0.0 0,0,0 -6.17e-03 -6.12e-03 -6.12e-03
172,193,197
57.7 0.03 0.03 0.04172,172,197 0.0 0.0 0.0 0,0,0
48 0.0 0.03 0.03 0.04172,172,197 0.0 0.0 0.0 0,0,0 -6.17e-03 -6.12e-03 -6.12e-03
172,193,197
57.7 0.06 0.05 0.08172,172,197 0.0 0.0 0.0 0,0,0
49 0.0 0.06 0.05 0.09172,172,197 0.0 0.0 0.0 0,0,0 -9.71e-03 -9.52e-03 -9.49e-03
172,193,197
57.7 0.03 0.03 0.05172,172,197 0.0 0.0 0.0 0,0,0
50 0.0 0.03 0.03 0.05172,172,197 0.0 0.0 0.0 0,0,0 -9.71e-03 -9.52e-03 -9.49e-03
172,193,197
57.7 0.06 0.05 0.09172,172,197 0.0 0.0 0.0 0,0,0
51 0.0 0.05 0.04 0.06172,172,197 0.0 0.0 0.0 0,0,0 -0.02 -0.02 -0.02
176,195,199
57.7 0.03 0.03 0.04172,172,197 0.0 0.0 0.0 0,0,0
52 0.0 0.03 0.03 0.04172,172,197 0.0 0.0 0.0 0,0,0 -0.02 -0.02 -0.02
172,193,197
57.7 0.05 0.04 0.06172,172,197 0.0 0.0 0.0 0,0,0
53 0.0 0.04 0.03 0.05172,172,197 0.0 0.0 0.0 0,0,0 -9.72e-03 -9.53e-03 -9.50e-03
176,195,199
90.0 0.04 0.03 0.05172,172,197 0.0 0.0 0.0 0,0,0
54 0.0 0.03 0.03 0.04172,172,197 0.0 0.0 0.0 0,0,0 -6.17e-03 -6.12e-03 -6.12e-03
172,193,197
90.0 0.03 0.03 0.04172,172,197 0.0 0.0 0.0 0,0,0
55 0.0 0.04 0.03 0.05172,172,197 0.0 0.0 0.0 0,0,0 -9.71e-03 -9.52e-03 -9.49e-03
176,195,199

	90.0	0.04	0.03	0.05	172,172,197	0.0	0.0	0.0	0,0,0		
Trave		**rRfck**	**rRfyk**	**rPfck**		**wR**	**wF**	**wP**		**dR**	**dF**	**dP**
		0.06	0.05	0.09		0.0	0.0	0.0		0.06	0.06	0.06

Setto	**rRfck**	**rRfyk**	**rPfck**	**Rif. cmb**	**wR**	**wF**	**wP**	**Rif. cmb**
					mm	mm	mm	
697	0.08	0.10	0.10	181,172,197	0.0	0.0	0.0	0,0,0
698	0.11	0.13	0.14	172,172,197	0.0	0.0	0.0	0,0,0
699	0.11	0.12	0.14	172,172,197	0.0	0.0	0.0	0,0,0
700	0.11	0.12	0.14	172,172,197	0.0	0.0	0.0	0,0,0
701	0.11	0.13	0.14	172,172,197	0.0	0.0	0.0	0,0,0
702	0.08	0.09	0.10	172,172,197	0.0	0.0	0.0	0,0,0
703	0.05	0.03	0.06	172,172,197	0.0	0.0	0.0	0,0,0
704	0.08	0.05	0.10	172,172,197	0.0	0.0	0.0	0,0,0
705	0.09	0.06	0.12	172,172,197	0.0	0.0	0.0	0,0,0
706	0.09	0.07	0.12	172,172,197	0.0	0.0	0.0	0,0,0
707	0.08	0.06	0.11	172,172,197	0.0	0.0	0.0	0,0,0
708	0.06	0.04	0.08	172,172,197	0.0	0.0	0.0	0,0,0
709	0.08	0.06	0.10	158,172,197	0.0	0.0	0.0	0,0,0
710	0.09	0.07	0.12	172,172,197	0.0	0.0	0.0	0,0,0
711	0.10	0.08	0.13	172,172,197	0.0	0.0	0.0	0,0,0
712	0.10	0.07	0.12	172,172,197	0.0	0.0	0.0	0,0,0
713	0.09	0.06	0.11	172,172,197	0.0	0.0	0.0	0,0,0
714	0.06	0.04	0.08	172,172,197	0.0	0.0	0.0	0,0,0
715	0.08	0.05	0.10	172,172,197	0.0	0.0	0.0	0,0,0
716	0.09	0.06	0.12	172,172,197	0.0	0.0	0.0	0,0,0
717	0.10	0.06	0.12	172,172,197	0.0	0.0	0.0	0,0,0
718	0.09	0.06	0.11	172,172,197	0.0	0.0	0.0	0,0,0
719	0.08	0.05	0.10	172,172,197	0.0	0.0	0.0	0,0,0
720	0.06	0.04	0.07	172,172,197	0.0	0.0	0.0	0,0,0
721	0.08	0.05	0.11	172,172,197	0.0	0.0	0.0	0,0,0
722	0.10	0.07	0.12	172,172,197	0.0	0.0	0.0	0,0,0
723	0.10	0.07	0.13	172,172,197	0.0	0.0	0.0	0,0,0
724	0.09	0.06	0.11	172,172,197	0.0	0.0	0.0	0,0,0
725	0.08	0.05	0.10	172,172,197	0.0	0.0	0.0	0,0,0
726	0.06	0.04	0.08	172,172,197	0.0	0.0	0.0	0,0,0
727	0.08	0.05	0.11	172,172,197	0.0	0.0	0.0	0,0,0
728	0.09	0.06	0.12	172,172,197	0.0	0.0	0.0	0,0,0
729	0.09	0.06	0.11	172,172,197	0.0	0.0	0.0	0,0,0
730	0.08	0.05	0.10	172,172,197	0.0	0.0	0.0	0,0,0
731	0.04	0.03	0.06	172,172,197	0.0	0.0	0.0	0,0,0
732	0.02	0.03	0.03	162,172,199	0.0	0.0	0.0	0,0,0
733	0.02	0.04	0.03	176,172,199	0.0	0.0	0.0	0,0,0
734	0.02	0.04	0.03	176,172,199	0.0	0.0	0.0	0,0,0
735	0.02	0.04	0.03	176,172,199	0.0	0.0	0.0	0,0,0
736	0.02	0.04	0.03	176,172,199	0.0	0.0	0.0	0,0,0
737	0.02	0.04	0.03	176,172,199	0.0	0.0	0.0	0,0,0
738	0.02	0.04	0.03	176,172,199	0.0	0.0	0.0	0,0,0
739	0.02	0.04	0.03	176,172,199	0.0	0.0	0.0	0,0,0
740	0.02	0.04	0.03	176,172,199	0.0	0.0	0.0	0,0,0
741	0.02	0.04	0.03	176,172,199	0.0	0.0	0.0	0,0,0
742	0.02	0.04	0.03	176,172,199	0.0	0.0	0.0	0,0,0
743	0.02	0.03	0.02	176,172,199	0.0	0.0	0.0	0,0,0
744	0.02	0.03	0.02	176,172,199	0.0	0.0	0.0	0,0,0
745	0.02	0.03	0.02	172,172,197	0.0	0.0	0.0	0,0,0
746	0.02	0.03	0.02	172,172,197	0.0	0.0	0.0	0,0,0
747	0.02	0.03	0.02	172,172,197	0.0	0.0	0.0	0,0,0
748	0.02	0.03	0.02	176,172,199	0.0	0.0	0.0	0,0,0
749	0.02	0.03	0.02	176,172,199	0.0	0.0	0.0	0,0,0
750	0.02	0.03	0.02	176,172,199	0.0	0.0	0.0	0,0,0
751	0.02	0.04	0.03	176,172,199	0.0	0.0	0.0	0,0,0
752	0.02	0.04	0.03	176,172,199	0.0	0.0	0.0	0,0,0
753	0.02	0.04	0.02	176,172,199	0.0	0.0	0.0	0,0,0
754	0.02	0.04	0.02	176,172,199	0.0	0.0	0.0	0,0,0
755	0.02	0.04	0.02	176,172,199	0.0	0.0	0.0	0,0,0
756	0.02	0.04	0.03	176,172,199	0.0	0.0	0.0	0,0,0
757	0.02	0.04	0.03	176,172,199	0.0	0.0	0.0	0,0,0
758	0.02	0.04	0.03	176,172,199	0.0	0.0	0.0	0,0,0
759	0.02	0.03	0.03	176,172,199	0.0	0.0	0.0	0,0,0
760	0.02	0.03	0.03	162,172,199	0.0	0.0	0.0	0,0,0
761	0.02	0.02	0.03	176,172,199	0.0	0.0	0.0	0,0,0
762	0.02	0.03	0.02	176,172,199	0.0	0.0	0.0	0,0,0
763	0.02	0.04	0.02	176,172,199	0.0	0.0	0.0	0,0,0
764	0.02	0.04	0.02	176,172,199	0.0	0.0	0.0	0,0,0
765	0.02	0.04	0.02	176,172,199	0.0	0.0	0.0	0,0,0
766	0.02	0.03	0.02	176,172,199	0.0	0.0	0.0	0,0,0

767	0.02	0.03	0.02	176,172,199	0.0	0.0	0.0	0,0,0
768	0.02	0.03	0.02	176,172,199	0.0	0.0	0.0	0,0,0
769	0.02	0.03	0.02	176,172,199	0.0	0.0	0.0	0,0,0
770	0.02	0.03	0.02	176,172,199	0.0	0.0	0.0	0,0,0
771	0.02	0.03	0.02	176,172,199	0.0	0.0	0.0	0,0,0
772	0.02	0.03	0.02	176,172,199	0.0	0.0	0.0	0,0,0
773	0.01	0.03	0.02	176,172,199	0.0	0.0	0.0	0,0,0
774	0.01	0.03	0.02	176,172,199	0.0	0.0	0.0	0,0,0
775	0.01	0.03	0.02	176,172,199	0.0	0.0	0.0	0,0,0
776	0.01	0.03	0.02	176,172,199	0.0	0.0	0.0	0,0,0
777	0.01	0.02	0.02	176,172,199	0.0	0.0	0.0	0,0,0
778	0.02	0.03	0.02	176,172,199	0.0	0.0	0.0	0,0,0
779	0.02	0.03	0.02	176,172,199	0.0	0.0	0.0	0,0,0
780	0.02	0.03	0.02	176,172,199	0.0	0.0	0.0	0,0,0
781	0.02	0.03	0.02	176,172,199	0.0	0.0	0.0	0,0,0
782	0.02	0.03	0.02	176,172,199	0.0	0.0	0.0	0,0,0
783	0.02	0.03	0.02	176,172,199	0.0	0.0	0.0	0,0,0
784	0.02	0.03	0.02	176,172,199	0.0	0.0	0.0	0,0,0
785	0.02	0.03	0.02	176,172,199	0.0	0.0	0.0	0,0,0
786	0.02	0.03	0.02	176,172,199	0.0	0.0	0.0	0,0,0
787	0.02	0.04	0.02	176,172,199	0.0	0.0	0.0	0,0,0
788	0.02	0.03	0.02	176,172,199	0.0	0.0	0.0	0,0,0
789	0.02	0.02	0.03	176,172,199	0.0	0.0	0.0	0,0,0
790	0.03	0.02	0.04	172,172,197	0.0	0.0	0.0	0,0,0
791	0.02	0.03	0.02	176,172,199	0.0	0.0	0.0	0,0,0
792	0.02	0.03	0.02	172,172,197	0.0	0.0	0.0	0,0,0
793	0.02	0.03	0.02	172,172,197	0.0	0.0	0.0	0,0,0
794	0.02	0.03	0.02	172,172,197	0.0	0.0	0.0	0,0,0
795	0.02	0.03	0.02	172,172,197	0.0	0.0	0.0	0,0,0
796	0.02	0.03	0.02	172,172,197	0.0	0.0	0.0	0,0,0
797	0.02	0.03	0.02	172,172,197	0.0	0.0	0.0	0,0,0
798	0.02	0.03	0.02	172,172,197	0.0	0.0	0.0	0,0,0
799	0.02	0.03	0.02	172,172,197	0.0	0.0	0.0	0,0,0
800	0.02	0.02	0.02	172,172,197	0.0	0.0	0.0	0,0,0
801	0.02	0.02	0.02	172,172,197	0.0	0.0	0.0	0,0,0
802	0.01	0.02	0.02	172,172,197	0.0	0.0	0.0	0,0,0
803	0.01	0.02	0.02	172,172,197	0.0	0.0	0.0	0,0,0
804	0.01	0.02	0.02	172,172,197	0.0	0.0	0.0	0,0,0
805	0.01	0.02	0.02	172,172,197	0.0	0.0	0.0	0,0,0
806	0.01	0.02	0.02	172,172,197	0.0	0.0	0.0	0,0,0
807	0.02	0.02	0.02	172,172,197	0.0	0.0	0.0	0,0,0
808	0.02	0.02	0.02	172,172,197	0.0	0.0	0.0	0,0,0
809	0.02	0.03	0.02	172,172,197	0.0	0.0	0.0	0,0,0
810	0.02	0.03	0.02	172,172,197	0.0	0.0	0.0	0,0,0
811	0.02	0.03	0.02	172,172,197	0.0	0.0	0.0	0,0,0
812	0.02	0.03	0.02	172,172,197	0.0	0.0	0.0	0,0,0
813	0.02	0.03	0.02	172,172,197	0.0	0.0	0.0	0,0,0
814	0.02	0.03	0.02	172,172,197	0.0	0.0	0.0	0,0,0
815	0.02	0.03	0.02	172,172,197	0.0	0.0	0.0	0,0,0
816	0.02	0.03	0.02	172,172,197	0.0	0.0	0.0	0,0,0
817	0.02	0.03	0.02	172,172,197	0.0	0.0	0.0	0,0,0
818	0.03	0.01	0.04	172,172,197	0.0	0.0	0.0	0,0,0
819	0.06	0.03	0.08	172,172,197	0.0	0.0	0.0	0,0,0
820	0.02	0.02	0.03	172,157,197	0.0	0.0	0.0	0,0,0
821	0.02	0.02	0.03	172,157,197	0.0	0.0	0.0	0,0,0
822	0.02	0.01	0.03	172,157,197	0.0	0.0	0.0	0,0,0
823	0.02	0.01	0.03	172,172,197	0.0	0.0	0.0	0,0,0
824	0.02	0.01	0.03	172,172,197	0.0	0.0	0.0	0,0,0
825	0.02	0.01	0.03	172,172,197	0.0	0.0	0.0	0,0,0
826	0.02	0.01	0.03	172,172,197	0.0	0.0	0.0	0,0,0
827	0.02	0.01	0.03	172,172,197	0.0	0.0	0.0	0,0,0
828	0.02	0.01	0.02	172,172,197	0.0	0.0	0.0	0,0,0
829	0.02	0.01	0.02	172,172,197	0.0	0.0	0.0	0,0,0
830	0.02	0.01	0.03	172,172,197	0.0	0.0	0.0	0,0,0
831	0.02	0.01	0.02	172,172,197	0.0	0.0	0.0	0,0,0
832	0.02	0.01	0.02	172,172,197	0.0	0.0	0.0	0,0,0
833	0.02	0.01	0.02	172,172,197	0.0	0.0	0.0	0,0,0
834	0.02	0.01	0.02	172,172,197	0.0	0.0	0.0	0,0,0
835	0.02	0.01	0.02	172,172,197	0.0	0.0	0.0	0,0,0
836	0.02	0.01	0.03	172,172,197	0.0	0.0	0.0	0,0,0
837	0.02	0.01	0.03	172,172,197	0.0	0.0	0.0	0,0,0
838	0.02	0.01	0.03	172,172,197	0.0	0.0	0.0	0,0,0
839	0.02	0.01	0.03	172,172,197	0.0	0.0	0.0	0,0,0
840	0.02	0.01	0.03	172,172,197	0.0	0.0	0.0	0,0,0
841	0.02	0.01	0.03	172,172,197	0.0	0.0	0.0	0,0,0
842	0.02	0.01	0.03	172,172,197	0.0	0.0	0.0	0,0,0
843	0.02	0.01	0.03	172,172,197	0.0	0.0	0.0	0,0,0
844	0.02	0.01	0.03	172,172,197	0.0	0.0	0.0	0,0,0
845	0.02	0.01	0.03	172,157,197	0.0	0.0	0.0	0,0,0

846	0.02	0.02	0.03	172,157,197	0.0	0.0	0.0	0,0,0
847	0.06	0.03	0.08	172,172,197	0.0	0.0	0.0	0,0,0
848	0.06	0.03	0.08	172,172,197	0.0	0.0	0.0	0,0,0
849	0.03	0.04	0.04	172,172,197	0.0	0.0	0.0	0,0,0
850	0.03	0.02	0.04	172,172,197	0.0	0.0	0.0	0,0,0
851	0.03	0.03	0.04	172,172,197	0.0	0.0	0.0	0,0,0
852	0.03	0.02	0.04	172,172,197	0.0	0.0	0.0	0,0,0
853	0.03	0.03	0.04	172,172,197	0.0	0.0	0.0	0,0,0
854	0.03	0.02	0.04	172,172,197	0.0	0.0	0.0	0,0,0
855	0.03	0.03	0.04	172,172,197	0.0	0.0	0.0	0,0,0
856	0.03	0.02	0.04	172,172,197	0.0	0.0	0.0	0,0,0
857	0.03	0.03	0.04	172,172,197	0.0	0.0	0.0	0,0,0
858	0.03	0.02	0.04	172,172,197	0.0	0.0	0.0	0,0,0
859	0.03	0.03	0.04	172,172,197	0.0	0.0	0.0	0,0,0
860	0.03	0.02	0.04	172,172,197	0.0	0.0	0.0	0,0,0
861	0.03	0.03	0.04	172,172,197	0.0	0.0	0.0	0,0,0
862	0.03	0.02	0.04	172,172,197	0.0	0.0	0.0	0,0,0
863	0.03	0.03	0.04	172,172,197	0.0	0.0	0.0	0,0,0
864	0.03	0.02	0.04	172,172,197	0.0	0.0	0.0	0,0,0
865	0.03	0.03	0.04	172,172,197	0.0	0.0	0.0	0,0,0
866	0.03	0.02	0.04	172,172,197	0.0	0.0	0.0	0,0,0
867	0.03	0.03	0.04	172,172,197	0.0	0.0	0.0	0,0,0
868	0.03	0.02	0.04	172,172,197	0.0	0.0	0.0	0,0,0
869	0.03	0.03	0.04	172,172,197	0.0	0.0	0.0	0,0,0
870	0.03	0.02	0.04	172,172,197	0.0	0.0	0.0	0,0,0
871	0.03	0.03	0.04	172,172,197	0.0	0.0	0.0	0,0,0
872	0.03	0.02	0.04	172,172,197	0.0	0.0	0.0	0,0,0
873	0.03	0.02	0.04	172,172,197	0.0	0.0	0.0	0,0,0
874	0.03	0.02	0.04	172,172,197	0.0	0.0	0.0	0,0,0
875	0.03	0.02	0.04	172,172,197	0.0	0.0	0.0	0,0,0
876	0.03	0.02	0.04	172,172,197	0.0	0.0	0.0	0,0,0
877	0.03	0.02	0.04	172,172,197	0.0	0.0	0.0	0,0,0
878	0.03	0.02	0.04	172,172,197	0.0	0.0	0.0	0,0,0
879	0.03	0.02	0.04	172,172,197	0.0	0.0	0.0	0,0,0
880	0.03	0.03	0.04	172,172,197	0.0	0.0	0.0	0,0,0
881	0.03	0.02	0.04	172,172,197	0.0	0.0	0.0	0,0,0
882	0.03	0.03	0.04	172,172,197	0.0	0.0	0.0	0,0,0
883	0.03	0.02	0.04	172,172,197	0.0	0.0	0.0	0,0,0
884	0.03	0.03	0.04	172,172,197	0.0	0.0	0.0	0,0,0
885	0.03	0.02	0.04	172,172,197	0.0	0.0	0.0	0,0,0
886	0.03	0.03	0.04	172,172,197	0.0	0.0	0.0	0,0,0
887	0.03	0.02	0.04	172,172,197	0.0	0.0	0.0	0,0,0
888	0.03	0.03	0.04	172,172,197	0.0	0.0	0.0	0,0,0
889	0.03	0.02	0.04	172,172,197	0.0	0.0	0.0	0,0,0
890	0.03	0.03	0.04	172,172,197	0.0	0.0	0.0	0,0,0
891	0.03	0.02	0.04	172,172,197	0.0	0.0	0.0	0,0,0
892	0.03	0.03	0.04	172,172,197	0.0	0.0	0.0	0,0,0
893	0.03	0.02	0.04	172,172,197	0.0	0.0	0.0	0,0,0
894	0.03	0.03	0.04	172,172,197	0.0	0.0	0.0	0,0,0
895	0.03	0.02	0.04	172,172,197	0.0	0.0	0.0	0,0,0
896	0.03	0.03	0.04	172,172,197	0.0	0.0	0.0	0,0,0
897	0.03	0.02	0.04	172,172,197	0.0	0.0	0.0	0,0,0
898	0.03	0.03	0.04	172,172,197	0.0	0.0	0.0	0,0,0
899	0.03	0.02	0.04	172,172,197	0.0	0.0	0.0	0,0,0
900	0.03	0.03	0.04	172,172,197	0.0	0.0	0.0	0,0,0
901	0.03	0.02	0.04	172,172,197	0.0	0.0	0.0	0,0,0
902	0.03	0.04	0.04	172,172,197	0.0	0.0	0.0	0,0,0
903	0.06	0.03	0.08	172,172,197	0.0	0.0	0.0	0,0,0
904	0.04	0.02	0.05	172,172,197	0.0	0.0	0.0	0,0,0
905	0.05	0.03	0.06	172,172,197	0.0	0.0	0.0	0,0,0
906	0.05	0.03	0.06	172,172,197	0.0	0.0	0.0	0,0,0
907	0.05	0.03	0.06	172,172,197	0.0	0.0	0.0	0,0,0
908	0.05	0.03	0.06	172,172,197	0.0	0.0	0.0	0,0,0
909	0.04	0.02	0.05	172,172,197	0.0	0.0	0.0	0,0,0
910	0.03	0.02	0.04	172,172,197	0.0	0.0	0.0	0,0,0
911	0.04	0.03	0.06	172,172,197	0.0	0.0	0.0	0,0,0
912	0.05	0.03	0.06	172,172,197	0.0	0.0	0.0	0,0,0
913	0.05	0.03	0.06	172,172,197	0.0	0.0	0.0	0,0,0
914	0.05	0.03	0.06	172,172,197	0.0	0.0	0.0	0,0,0
915	0.04	0.03	0.05	172,172,197	0.0	0.0	0.0	0,0,0
916	0.04	0.03	0.06	158,172,197	0.0	0.0	0.0	0,0,0
917	0.05	0.03	0.06	172,172,197	0.0	0.0	0.0	0,0,0
918	0.05	0.03	0.07	172,172,197	0.0	0.0	0.0	0,0,0
919	0.05	0.03	0.07	172,172,197	0.0	0.0	0.0	0,0,0
920	0.05	0.03	0.06	172,172,197	0.0	0.0	0.0	0,0,0
921	0.04	0.02	0.05	172,172,197	0.0	0.0	0.0	0,0,0
922	0.04	0.03	0.06	172,172,197	0.0	0.0	0.0	0,0,0
923	0.05	0.03	0.06	172,172,197	0.0	0.0	0.0	0,0,0
924	0.05	0.03	0.07	172,172,197	0.0	0.0	0.0	0,0,0

925	0.05	0.03	0.06	172,172,197	0.0	0.0	0.0	0,0,0
926	0.04	0.03	0.05	172,172,197	0.0	0.0	0.0	0,0,0
927	0.04	0.02	0.05	172,172,197	0.0	0.0	0.0	0,0,0
928	0.04	0.03	0.06	172,172,197	0.0	0.0	0.0	0,0,0
929	0.05	0.03	0.06	172,172,197	0.0	0.0	0.0	0,0,0
930	0.05	0.03	0.07	172,172,197	0.0	0.0	0.0	0,0,0
931	0.05	0.03	0.06	172,172,197	0.0	0.0	0.0	0,0,0
932	0.04	0.03	0.05	172,172,197	0.0	0.0	0.0	0,0,0
933	0.04	0.02	0.05	172,172,197	0.0	0.0	0.0	0,0,0
934	0.04	0.03	0.06	172,172,197	0.0	0.0	0.0	0,0,0
935	0.05	0.03	0.06	172,172,197	0.0	0.0	0.0	0,0,0
936	0.05	0.03	0.06	172,172,197	0.0	0.0	0.0	0,0,0
937	0.04	0.03	0.05	172,172,197	0.0	0.0	0.0	0,0,0
938	0.03	0.02	0.04	172,172,197	0.0	0.0	0.0	0,0,0
939	0.02	0.01	0.02	172,172,199	0.0	0.0	0.0	0,0,0
940	0.02	0.01	0.03	172,172,197	0.0	0.0	0.0	0,0,0
941	0.02	0.01	0.03	172,172,197	0.0	0.0	0.0	0,0,0
942	0.02	0.01	0.03	172,172,197	0.0	0.0	0.0	0,0,0
943	0.02	0.01	0.03	172,172,197	0.0	0.0	0.0	0,0,0
944	0.02	0.01	0.03	172,172,197	0.0	0.0	0.0	0,0,0
945	0.02	0.01	0.03	172,172,197	0.0	0.0	0.0	0,0,0
946	0.02	0.01	0.03	172,172,197	0.0	0.0	0.0	0,0,0
947	0.03	0.02	0.03	172,172,197	0.0	0.0	0.0	0,0,0
948	0.02	0.01	0.03	172,172,197	0.0	0.0	0.0	0,0,0
949	0.02	0.01	0.03	172,172,197	0.0	0.0	0.0	0,0,0
950	0.02	0.01	0.03	172,172,197	0.0	0.0	0.0	0,0,0
951	0.02	0.01	0.03	172,172,197	0.0	0.0	0.0	0,0,0
952	0.02	0.01	0.03	172,172,197	0.0	0.0	0.0	0,0,0
953	0.02	0.02	0.03	172,172,197	0.0	0.0	0.0	0,0,0
954	0.02	0.01	0.03	172,172,197	0.0	0.0	0.0	0,0,0
955	0.02	0.01	0.03	172,172,197	0.0	0.0	0.0	0,0,0
956	0.02	0.01	0.03	172,172,197	0.0	0.0	0.0	0,0,0
957	0.02	0.01	0.03	172,172,197	0.0	0.0	0.0	0,0,0
958	0.02	0.01	0.03	172,172,197	0.0	0.0	0.0	0,0,0
959	0.02	0.01	0.03	172,172,197	0.0	0.0	0.0	0,0,0
960	0.02	0.01	0.03	172,172,197	0.0	0.0	0.0	0,0,0
961	0.02	0.01	0.03	172,172,197	0.0	0.0	0.0	0,0,0
962	0.02	0.01	0.03	172,172,197	0.0	0.0	0.0	0,0,0
963	0.02	0.01	0.03	172,172,197	0.0	0.0	0.0	0,0,0
964	0.02	0.01	0.03	172,172,197	0.0	0.0	0.0	0,0,0
965	0.02	0.01	0.03	172,172,197	0.0	0.0	0.0	0,0,0
966	0.02	0.01	0.03	172,172,197	0.0	0.0	0.0	0,0,0
967	0.02	0.01	0.02	172,172,197	0.0	0.0	0.0	0,0,0
968	0.02	9.50e-03	0.02	176,176,199	0.0	0.0	0.0	0,0,0
969	0.02	9.05e-03	0.02	176,176,199	0.0	0.0	0.0	0,0,0
970	0.02	9.10e-03	0.02	176,176,199	0.0	0.0	0.0	0,0,0
971	0.02	8.99e-03	0.02	176,176,199	0.0	0.0	0.0	0,0,0
972	0.01	8.80e-03	0.02	176,176,199	0.0	0.0	0.0	0,0,0
973	0.01	8.91e-03	0.02	176,176,199	0.0	0.0	0.0	0,0,0
974	0.01	8.65e-03	0.02	176,176,199	0.0	0.0	0.0	0,0,0
975	0.01	8.81e-03	0.02	176,176,199	0.0	0.0	0.0	0,0,0
976	0.01	8.90e-03	0.02	176,176,199	0.0	0.0	0.0	0,0,0
977	0.01	8.77e-03	0.02	176,176,199	0.0	0.0	0.0	0,0,0
978	0.01	8.57e-03	0.02	176,176,199	0.0	0.0	0.0	0,0,0
979	0.01	8.55e-03	0.02	176,176,199	0.0	0.0	0.0	0,0,0
980	0.01	8.38e-03	0.02	176,176,199	0.0	0.0	0.0	0,0,0
981	0.01	8.56e-03	0.02	176,176,199	0.0	0.0	0.0	0,0,0
982	0.01	8.61e-03	0.02	176,176,199	0.0	0.0	0.0	0,0,0
983	0.01	8.43e-03	0.02	176,176,199	0.0	0.0	0.0	0,0,0
984	0.01	8.23e-03	0.02	176,176,199	0.0	0.0	0.0	0,0,0
985	0.01	8.63e-03	0.02	176,176,199	0.0	0.0	0.0	0,0,0
986	0.01	8.33e-03	0.02	176,176,199	0.0	0.0	0.0	0,0,0
987	0.01	8.53e-03	0.02	176,176,199	0.0	0.0	0.0	0,0,0
988	0.01	8.79e-03	0.02	176,176,199	0.0	0.0	0.0	0,0,0
989	0.01	8.70e-03	0.02	176,176,199	0.0	0.0	0.0	0,0,0
990	0.01	8.53e-03	0.02	176,176,199	0.0	0.0	0.0	0,0,0
991	0.01	8.85e-03	0.02	176,176,199	0.0	0.0	0.0	0,0,0
992	0.01	8.68e-03	0.02	176,176,199	0.0	0.0	0.0	0,0,0
993	0.01	8.87e-03	0.02	176,176,199	0.0	0.0	0.0	0,0,0
994	0.01	8.98e-03	0.02	176,176,199	0.0	0.0	0.0	0,0,0
995	0.01	8.93e-03	0.02	176,176,199	0.0	0.0	0.0	0,0,0
996	0.02	9.38e-03	0.02	176,176,199	0.0	0.0	0.0	0,0,0
997	0.02	0.01	0.03	172,172,197	0.0	0.0	0.0	0,0,0
998	0.01	7.79e-03	0.02	176,176,199	0.0	0.0	0.0	0,0,0
999	0.01	7.81e-03	0.02	176,176,199	0.0	0.0	0.0	0,0,0
1000	0.01	7.85e-03	0.02	176,176,199	0.0	0.0	0.0	0,0,0
1001	0.01	7.93e-03	0.02	176,176,199	0.0	0.0	0.0	0,0,0
1002	0.01	8.07e-03	0.02	176,176,199	0.0	0.0	0.0	0,0,0
1003	0.01	7.71e-03	0.02	176,176,199	0.0	0.0	0.0	0,0,0

1004	0.01	7.61e-03	0.02	176,176,199	0.0	0.0	0.0	0,0,0
1005	0.01	7.60e-03	0.02	176,176,199	0.0	0.0	0.0	0,0,0
1006	0.01	7.61e-03	0.02	176,176,199	0.0	0.0	0.0	0,0,0
1007	0.01	7.70e-03	0.02	176,176,199	0.0	0.0	0.0	0,0,0
1008	0.01	8.00e-03	0.02	176,176,199	0.0	0.0	0.0	0,0,0
1009	0.01	7.72e-03	0.02	176,176,199	0.0	0.0	0.0	0,0,0
1010	0.01	7.61e-03	0.02	176,176,199	0.0	0.0	0.0	0,0,0
1011	0.01	7.50e-03	0.02	176,176,199	0.0	0.0	0.0	0,0,0
1012	0.01	7.48e-03	0.02	172,172,197	0.0	0.0	0.0	0,0,0
1013	0.01	7.62e-03	0.02	172,172,197	0.0	0.0	0.0	0,0,0
1014	0.01	8.05e-03	0.02	176,176,199	0.0	0.0	0.0	0,0,0
1015	0.01	7.65e-03	0.02	176,176,199	0.0	0.0	0.0	0,0,0
1016	0.01	7.56e-03	0.02	176,176,199	0.0	0.0	0.0	0,0,0
1017	0.01	7.55e-03	0.02	176,176,199	0.0	0.0	0.0	0,0,0
1018	0.01	7.56e-03	0.02	176,176,199	0.0	0.0	0.0	0,0,0
1019	0.01	7.65e-03	0.02	176,176,199	0.0	0.0	0.0	0,0,0
1020	0.01	8.02e-03	0.02	176,176,199	0.0	0.0	0.0	0,0,0
1021	0.01	7.84e-03	0.02	176,176,199	0.0	0.0	0.0	0,0,0
1022	0.01	7.77e-03	0.02	176,176,199	0.0	0.0	0.0	0,0,0
1023	0.01	7.73e-03	0.02	176,176,199	0.0	0.0	0.0	0,0,0
1024	0.01	7.70e-03	0.02	176,176,199	0.0	0.0	0.0	0,0,0
1025	0.02	0.01	0.03	172,172,197	0.0	0.0	0.0	0,0,0
1026	0.02	0.02	0.03	172,172,197	0.0	0.0	0.0	0,0,0
1027	0.02	9.64e-03	0.02	172,172,197	0.0	0.0	0.0	0,0,0
1028	0.01	9.11e-03	0.02	172,172,197	0.0	0.0	0.0	0,0,0
1029	0.01	9.44e-03	0.02	172,172,197	0.0	0.0	0.0	0,0,0
1030	0.01	9.67e-03	0.02	172,172,197	0.0	0.0	0.0	0,0,0
1031	0.02	0.01	0.02	172,172,197	0.0	0.0	0.0	0,0,0
1032	0.01	9.31e-03	0.02	172,172,197	0.0	0.0	0.0	0,0,0
1033	0.01	9.29e-03	0.02	172,172,197	0.0	0.0	0.0	0,0,0
1034	0.01	9.29e-03	0.02	172,172,197	0.0	0.0	0.0	0,0,0
1035	0.01	9.29e-03	0.02	172,172,197	0.0	0.0	0.0	0,0,0
1036	0.01	9.30e-03	0.02	172,172,197	0.0	0.0	0.0	0,0,0
1037	0.02	9.40e-03	0.02	172,172,197	0.0	0.0	0.0	0,0,0
1038	0.01	9.31e-03	0.02	172,172,197	0.0	0.0	0.0	0,0,0
1039	0.01	9.24e-03	0.02	172,172,197	0.0	0.0	0.0	0,0,0
1040	0.01	9.22e-03	0.02	172,172,197	0.0	0.0	0.0	0,0,0
1041	0.01	9.24e-03	0.02	172,172,197	0.0	0.0	0.0	0,0,0
1042	0.01	9.28e-03	0.02	172,172,197	0.0	0.0	0.0	0,0,0
1043	0.02	9.40e-03	0.02	172,172,197	0.0	0.0	0.0	0,0,0
1044	0.01	9.25e-03	0.02	172,172,197	0.0	0.0	0.0	0,0,0
1045	0.01	9.23e-03	0.02	172,172,197	0.0	0.0	0.0	0,0,0
1046	0.01	9.24e-03	0.02	172,172,197	0.0	0.0	0.0	0,0,0
1047	0.01	9.23e-03	0.02	172,172,197	0.0	0.0	0.0	0,0,0
1048	0.01	9.25e-03	0.02	172,172,197	0.0	0.0	0.0	0,0,0
1049	0.02	9.99e-03	0.02	172,172,197	0.0	0.0	0.0	0,0,0
1050	0.01	9.22e-03	0.02	172,172,197	0.0	0.0	0.0	0,0,0
1051	0.01	9.16e-03	0.02	172,172,197	0.0	0.0	0.0	0,0,0
1052	0.01	9.05e-03	0.02	172,172,197	0.0	0.0	0.0	0,0,0
1053	0.02	9.55e-03	0.02	172,172,197	0.0	0.0	0.0	0,0,0
1054	0.02	0.02	0.03	172,172,197	0.0	0.0	0.0	0,0,0
1055	0.03	0.02	0.03	172,172,197	0.0	0.0	0.0	0,0,0
1056	0.02	0.01	0.03	172,172,197	0.0	0.0	0.0	0,0,0
1057	0.02	9.61e-03	0.02	172,172,197	0.0	0.0	0.0	0,0,0
1058	0.02	9.98e-03	0.02	172,172,197	0.0	0.0	0.0	0,0,0
1059	0.02	9.65e-03	0.02	172,172,197	0.0	0.0	0.0	0,0,0
1060	0.02	0.01	0.02	172,172,197	0.0	0.0	0.0	0,0,0
1061	0.02	9.65e-03	0.02	172,172,197	0.0	0.0	0.0	0,0,0
1062	0.02	0.01	0.02	172,172,197	0.0	0.0	0.0	0,0,0
1063	0.02	0.01	0.02	172,172,197	0.0	0.0	0.0	0,0,0
1064	0.02	0.01	0.02	172,172,197	0.0	0.0	0.0	0,0,0
1065	0.02	0.01	0.02	172,172,197	0.0	0.0	0.0	0,0,0
1066	0.02	0.01	0.02	172,172,197	0.0	0.0	0.0	0,0,0
1067	0.02	9.51e-03	0.02	172,172,197	0.0	0.0	0.0	0,0,0
1068	0.02	9.74e-03	0.02	172,172,197	0.0	0.0	0.0	0,0,0
1069	0.02	9.45e-03	0.02	172,172,197	0.0	0.0	0.0	0,0,0
1070	0.02	9.39e-03	0.02	172,172,197	0.0	0.0	0.0	0,0,0
1071	0.02	9.42e-03	0.02	172,172,197	0.0	0.0	0.0	0,0,0
1072	0.02	9.38e-03	0.02	172,172,197	0.0	0.0	0.0	0,0,0
1073	0.02	9.43e-03	0.02	172,172,197	0.0	0.0	0.0	0,0,0
1074	0.02	9.40e-03	0.02	172,172,197	0.0	0.0	0.0	0,0,0
1075	0.02	9.58e-03	0.02	172,172,197	0.0	0.0	0.0	0,0,0
1076	0.02	9.59e-03	0.02	172,172,197	0.0	0.0	0.0	0,0,0
1077	0.02	9.48e-03	0.02	172,172,197	0.0	0.0	0.0	0,0,0
1078	0.02	9.47e-03	0.02	172,172,197	0.0	0.0	0.0	0,0,0
1079	0.02	9.38e-03	0.02	172,172,197	0.0	0.0	0.0	0,0,0
1080	0.02	9.38e-03	0.02	172,172,197	0.0	0.0	0.0	0,0,0
1081	0.02	9.36e-03	0.02	172,172,197	0.0	0.0	0.0	0,0,0
1082	0.02	9.37e-03	0.02	172,172,197	0.0	0.0	0.0	0,0,0

1083	0.02	9.40e-03	0.02	172,172,197	0.0	0.0	0.0	0,0,0
1084	0.02	9.41e-03	0.02	172,172,197	0.0	0.0	0.0	0,0,0
1085	0.02	9.43e-03	0.02	172,172,197	0.0	0.0	0.0	0,0,0
1086	0.02	9.44e-03	0.02	172,172,197	0.0	0.0	0.0	0,0,0
1087	0.02	9.49e-03	0.02	172,172,197	0.0	0.0	0.0	0,0,0
1088	0.02	9.50e-03	0.02	172,172,197	0.0	0.0	0.0	0,0,0
1089	0.02	9.47e-03	0.02	172,172,197	0.0	0.0	0.0	0,0,0
1090	0.02	9.51e-03	0.02	172,172,197	0.0	0.0	0.0	0,0,0
1091	0.02	9.39e-03	0.02	172,172,197	0.0	0.0	0.0	0,0,0
1092	0.02	9.44e-03	0.02	172,172,197	0.0	0.0	0.0	0,0,0
1093	0.02	9.38e-03	0.02	172,172,197	0.0	0.0	0.0	0,0,0
1094	0.02	9.43e-03	0.02	172,172,197	0.0	0.0	0.0	0,0,0
1095	0.02	9.39e-03	0.02	172,172,197	0.0	0.0	0.0	0,0,0
1096	0.02	9.44e-03	0.02	172,172,197	0.0	0.0	0.0	0,0,0
1097	0.02	9.41e-03	0.02	172,172,197	0.0	0.0	0.0	0,0,0
1098	0.02	9.47e-03	0.02	172,172,197	0.0	0.0	0.0	0,0,0
1099	0.02	9.51e-03	0.02	172,172,197	0.0	0.0	0.0	0,0,0
1100	0.02	9.57e-03	0.02	172,172,197	0.0	0.0	0.0	0,0,0
1101	0.02	0.01	0.02	172,172,197	0.0	0.0	0.0	0,0,0
1102	0.02	9.81e-03	0.02	172,172,197	0.0	0.0	0.0	0,0,0
1103	0.02	0.01	0.02	172,172,197	0.0	0.0	0.0	0,0,0
1104	0.02	9.63e-03	0.02	172,172,197	0.0	0.0	0.0	0,0,0
1105	0.02	0.01	0.02	172,172,197	0.0	0.0	0.0	0,0,0
1106	0.02	9.63e-03	0.02	172,172,197	0.0	0.0	0.0	0,0,0
1107	0.02	0.01	0.02	172,172,197	0.0	0.0	0.0	0,0,0
1108	0.02	9.58e-03	0.02	172,172,197	0.0	0.0	0.0	0,0,0
1109	0.02	0.01	0.03	172,172,197	0.0	0.0	0.0	0,0,0
1110	0.03	0.02	0.03	172,172,197	0.0	0.0	0.0	0,0,0
1111	0.03	0.02	0.03	172,172,197	0.0	0.0	0.0	0,0,0
1112	0.03	0.02	0.04	172,172,197	0.0	0.0	0.0	0,0,0
1113	0.03	0.02	0.04	172,172,197	0.0	0.0	0.0	0,0,0
1114	0.03	0.02	0.04	172,172,197	0.0	0.0	0.0	0,0,0
1115	0.03	0.02	0.04	172,172,197	0.0	0.0	0.0	0,0,0
1116	0.03	0.01	0.03	172,172,197	0.0	0.0	0.0	0,0,0
1117	0.03	0.01	0.03	172,172,197	0.0	0.0	0.0	0,0,0
1118	0.03	0.02	0.04	172,172,197	0.0	0.0	0.0	0,0,0
1119	0.03	0.02	0.04	172,172,197	0.0	0.0	0.0	0,0,0
1120	0.04	0.02	0.05	172,172,197	0.0	0.0	0.0	0,0,0
1121	0.03	0.02	0.04	172,172,197	0.0	0.0	0.0	0,0,0
1122	0.03	0.02	0.04	172,172,197	0.0	0.0	0.0	0,0,0
1123	0.03	0.02	0.04	172,172,197	0.0	0.0	0.0	0,0,0
1124	0.03	0.02	0.04	172,172,197	0.0	0.0	0.0	0,0,0
1125	0.04	0.02	0.05	172,172,197	0.0	0.0	0.0	0,0,0
1126	0.03	0.02	0.04	172,172,197	0.0	0.0	0.0	0,0,0
1127	0.03	0.02	0.04	172,172,197	0.0	0.0	0.0	0,0,0
1128	0.03	0.02	0.04	172,172,197	0.0	0.0	0.0	0,0,0
1129	0.03	0.02	0.04	172,172,197	0.0	0.0	0.0	0,0,0
1130	0.03	0.02	0.04	172,172,197	0.0	0.0	0.0	0,0,0
1131	0.04	0.02	0.05	172,172,197	0.0	0.0	0.0	0,0,0
1132	0.03	0.02	0.04	172,172,197	0.0	0.0	0.0	0,0,0
1133	0.03	0.02	0.04	172,172,197	0.0	0.0	0.0	0,0,0
1134	0.03	0.02	0.04	172,172,197	0.0	0.0	0.0	0,0,0
1135	0.03	0.02	0.04	172,172,197	0.0	0.0	0.0	0,0,0
1136	0.03	0.02	0.04	172,172,197	0.0	0.0	0.0	0,0,0
1137	0.04	0.02	0.04	172,172,197	0.0	0.0	0.0	0,0,0
1138	0.03	0.02	0.04	172,172,197	0.0	0.0	0.0	0,0,0
1139	0.03	0.02	0.04	172,172,197	0.0	0.0	0.0	0,0,0
1140	0.03	0.02	0.04	172,172,197	0.0	0.0	0.0	0,0,0
1141	0.03	0.02	0.04	172,172,197	0.0	0.0	0.0	0,0,0
1142	0.03	0.02	0.04	172,172,197	0.0	0.0	0.0	0,0,0
1143	0.03	0.02	0.04	172,172,197	0.0	0.0	0.0	0,0,0
1144	0.03	0.02	0.04	172,172,197	0.0	0.0	0.0	0,0,0
1145	0.02	0.01	0.03	172,172,197	0.0	0.0	0.0	0,0,0
1146	0.02	0.01	0.03	172,172,197	0.0	0.0	0.0	0,0,0
1147	0.03	0.01	0.03	172,172,197	0.0	0.0	0.0	0,0,0
1148	0.03	0.02	0.04	172,172,197	0.0	0.0	0.0	0,0,0
1149	0.03	0.02	0.04	172,172,197	0.0	0.0	0.0	0,0,0
1150	0.03	0.01	0.03	172,172,197	0.0	0.0	0.0	0,0,0
1151	0.03	0.01	0.03	172,172,197	0.0	0.0	0.0	0,0,0
1152	0.02	0.01	0.03	172,172,197	0.0	0.0	0.0	0,0,0
1153	0.03	0.01	0.03	172,172,197	0.0	0.0	0.0	0,0,0
1154	0.03	0.02	0.03	172,172,197	0.0	0.0	0.0	0,0,0
1155	0.03	0.02	0.03	172,172,197	0.0	0.0	0.0	0,0,0
1156	0.02	0.01	0.03	172,172,197	0.0	0.0	0.0	0,0,0
1157	0.02	0.01	0.03	172,172,197	0.0	0.0	0.0	0,0,0
1158	0.02	0.01	0.03	172,172,197	0.0	0.0	0.0	0,0,0
1159	0.02	0.01	0.03	172,172,197	0.0	0.0	0.0	0,0,0
1160	0.02	0.01	0.03	172,172,197	0.0	0.0	0.0	0,0,0
1161	0.02	0.01	0.03	172,172,197	0.0	0.0	0.0	0,0,0

1162	0.02	0.01	0.03	172,172,197	0.0	0.0	0.0	0,0,0
1163	0.02	0.01	0.03	172,172,197	0.0	0.0	0.0	0,0,0
1164	0.02	0.01	0.03	172,172,197	0.0	0.0	0.0	0,0,0
1165	0.02	0.01	0.03	172,172,197	0.0	0.0	0.0	0,0,0
1166	0.03	0.02	0.03	172,172,197	0.0	0.0	0.0	0,0,0
1167	0.02	0.01	0.03	172,172,197	0.0	0.0	0.0	0,0,0
1168	0.02	0.01	0.03	172,172,197	0.0	0.0	0.0	0,0,0
1169	0.02	0.01	0.03	172,172,197	0.0	0.0	0.0	0,0,0
1170	0.03	0.01	0.03	172,172,197	0.0	0.0	0.0	0,0,0
1171	0.03	0.01	0.03	172,172,197	0.0	0.0	0.0	0,0,0
1172	0.03	0.02	0.03	172,172,197	0.0	0.0	0.0	0,0,0
1173	0.03	0.01	0.03	172,172,197	0.0	0.0	0.0	0,0,0
1174	0.02	0.01	0.03	172,172,197	0.0	0.0	0.0	0,0,0
1175	0.02	0.01	0.03	176,176,199	0.0	0.0	0.0	0,0,0
1176	0.02	0.01	0.03	176,176,199	0.0	0.0	0.0	0,0,0
1177	0.02	0.01	0.03	176,176,199	0.0	0.0	0.0	0,0,0
1178	0.02	0.01	0.03	176,176,199	0.0	0.0	0.0	0,0,0
1179	0.02	0.01	0.03	176,176,199	0.0	0.0	0.0	0,0,0
1180	0.02	0.01	0.03	176,176,199	0.0	0.0	0.0	0,0,0
1181	0.02	0.01	0.02	176,176,199	0.0	0.0	0.0	0,0,0
1182	0.02	0.01	0.02	176,176,199	0.0	0.0	0.0	0,0,0
1183	0.02	0.01	0.02	176,176,199	0.0	0.0	0.0	0,0,0
1184	0.02	0.01	0.02	176,176,199	0.0	0.0	0.0	0,0,0
1185	0.02	0.01	0.02	176,176,199	0.0	0.0	0.0	0,0,0
1186	0.02	0.01	0.02	176,176,199	0.0	0.0	0.0	0,0,0
1187	0.02	9.61e-03	0.02	176,176,199	0.0	0.0	0.0	0,0,0
1188	0.02	9.80e-03	0.02	176,176,199	0.0	0.0	0.0	0,0,0
1189	0.02	9.93e-03	0.02	176,176,199	0.0	0.0	0.0	0,0,0
1190	0.02	9.57e-03	0.02	176,176,199	0.0	0.0	0.0	0,0,0
1191	0.01	9.18e-03	0.02	176,176,199	0.0	0.0	0.0	0,0,0
1192	0.02	9.83e-03	0.02	176,176,199	0.0	0.0	0.0	0,0,0
1193	0.02	9.97e-03	0.02	176,176,199	0.0	0.0	0.0	0,0,0
1194	0.02	0.01	0.02	176,176,199	0.0	0.0	0.0	0,0,0
1195	0.02	0.01	0.02	176,176,199	0.0	0.0	0.0	0,0,0
1196	0.02	0.01	0.02	176,176,199	0.0	0.0	0.0	0,0,0
1197	0.02	0.01	0.02	176,176,199	0.0	0.0	0.0	0,0,0
1198	0.02	0.01	0.02	176,176,199	0.0	0.0	0.0	0,0,0
1199	0.02	0.01	0.02	176,176,199	0.0	0.0	0.0	0,0,0
1200	0.02	0.01	0.03	176,176,199	0.0	0.0	0.0	0,0,0
1201	0.02	0.01	0.03	176,176,199	0.0	0.0	0.0	0,0,0
1202	0.02	0.01	0.03	176,176,199	0.0	0.0	0.0	0,0,0
1203	0.02	0.01	0.03	176,176,199	0.0	0.0	0.0	0,0,0
1204	0.02	0.01	0.03	176,176,199	0.0	0.0	0.0	0,0,0
1205	0.02	9.63e-03	0.02	176,176,199	0.0	0.0	0.0	0,0,0
1206	0.02	9.43e-03	0.02	176,176,199	0.0	0.0	0.0	0,0,0
1207	0.02	9.38e-03	0.02	176,176,199	0.0	0.0	0.0	0,0,0
1208	0.02	9.34e-03	0.02	176,176,199	0.0	0.0	0.0	0,0,0
1209	0.02	9.39e-03	0.02	176,176,199	0.0	0.0	0.0	0,0,0
1210	0.02	8.97e-03	0.02	176,176,199	0.0	0.0	0.0	0,0,0
1211	0.02	8.92e-03	0.02	176,176,199	0.0	0.0	0.0	0,0,0
1212	0.02	8.89e-03	0.02	176,176,199	0.0	0.0	0.0	0,0,0
1213	0.02	8.80e-03	0.02	176,176,199	0.0	0.0	0.0	0,0,0
1214	0.01	8.73e-03	0.02	176,176,199	0.0	0.0	0.0	0,0,0
1215	0.01	8.77e-03	0.02	176,176,199	0.0	0.0	0.0	0,0,0
1216	0.01	8.18e-03	0.02	176,176,199	0.0	0.0	0.0	0,0,0
1217	0.01	8.15e-03	0.02	176,176,199	0.0	0.0	0.0	0,0,0
1218	0.01	8.03e-03	0.02	176,176,199	0.0	0.0	0.0	0,0,0
1219	0.01	7.96e-03	0.02	176,176,199	0.0	0.0	0.0	0,0,0
1220	0.01	8.09e-03	0.02	176,176,199	0.0	0.0	0.0	0,0,0
1221	0.01	8.68e-03	0.02	176,176,199	0.0	0.0	0.0	0,0,0
1222	0.01	8.54e-03	0.02	176,176,199	0.0	0.0	0.0	0,0,0
1223	0.01	8.58e-03	0.02	176,176,199	0.0	0.0	0.0	0,0,0
1224	0.01	8.66e-03	0.02	176,176,199	0.0	0.0	0.0	0,0,0
1225	0.01	8.67e-03	0.02	176,176,199	0.0	0.0	0.0	0,0,0
1226	0.01	8.70e-03	0.02	176,176,199	0.0	0.0	0.0	0,0,0
1227	0.02	9.23e-03	0.02	176,176,199	0.0	0.0	0.0	0,0,0
1228	0.02	9.08e-03	0.02	176,176,199	0.0	0.0	0.0	0,0,0
1229	0.02	9.13e-03	0.02	176,176,199	0.0	0.0	0.0	0,0,0
1230	0.02	9.17e-03	0.02	176,176,199	0.0	0.0	0.0	0,0,0
1231	0.02	9.37e-03	0.02	176,176,199	0.0	0.0	0.0	0,0,0
1232	0.02	0.01	0.03	176,176,199	0.0	0.0	0.0	0,0,0
1233	0.02	0.02	0.03	176,172,199	0.0	0.0	0.0	0,0,0
1234	0.02	0.02	0.02	172,172,197	0.0	0.0	0.0	0,0,0
1235	0.02	0.01	0.02	172,172,197	0.0	0.0	0.0	0,0,0
1236	0.01	0.01	0.02	172,172,197	0.0	0.0	0.0	0,0,0
1237	0.01	0.01	0.02	172,172,197	0.0	0.0	0.0	0,0,0
1238	0.01	0.01	0.02	172,172,197	0.0	0.0	0.0	0,0,0
1239	0.01	0.01	0.02	172,172,197	0.0	0.0	0.0	0,0,0
1240	0.01	0.01	0.02	172,172,197	0.0	0.0	0.0	0,0,0

1241	0.01	0.01	0.02	172,172,197	0.0	0.0	0.0	0,0,0
1242	0.01	0.01	0.02	172,172,197	0.0	0.0	0.0	0,0,0
1243	0.01	0.01	0.02	172,172,197	0.0	0.0	0.0	0,0,0
1244	0.01	0.01	0.02	172,172,197	0.0	0.0	0.0	0,0,0
1245	0.01	0.01	0.02	172,172,197	0.0	0.0	0.0	0,0,0
1246	0.01	0.01	0.02	172,172,197	0.0	0.0	0.0	0,0,0
1247	0.01	0.01	0.02	172,172,197	0.0	0.0	0.0	0,0,0
1248	0.01	0.01	0.02	172,172,197	0.0	0.0	0.0	0,0,0
1249	0.01	0.01	0.02	172,172,197	0.0	0.0	0.0	0,0,0
1250	0.01	0.01	0.02	172,172,197	0.0	0.0	0.0	0,0,0
1251	0.01	0.01	0.02	172,172,197	0.0	0.0	0.0	0,0,0
1252	0.01	0.01	0.02	172,172,197	0.0	0.0	0.0	0,0,0
1253	0.01	0.01	0.02	172,172,197	0.0	0.0	0.0	0,0,0
1254	0.01	0.01	0.02	172,172,197	0.0	0.0	0.0	0,0,0
1255	0.01	0.01	0.02	172,172,197	0.0	0.0	0.0	0,0,0
1256	0.01	0.01	0.02	172,172,197	0.0	0.0	0.0	0,0,0
1257	0.01	0.01	0.02	172,172,197	0.0	0.0	0.0	0,0,0
1258	0.01	0.01	0.02	172,172,197	0.0	0.0	0.0	0,0,0
1259	0.01	0.01	0.02	172,172,197	0.0	0.0	0.0	0,0,0
1260	0.02	0.02	0.02	172,172,197	0.0	0.0	0.0	0,0,0
1261	0.02	0.02	0.03	176,172,199	0.0	0.0	0.0	0,0,0
1262	0.02	0.02	0.03	172,176,197	0.0	0.0	0.0	0,0,0
1263	0.02	0.01	0.02	172,172,197	0.0	0.0	0.0	0,0,0
1264	0.01	8.76e-03	0.02	172,172,197	0.0	0.0	0.0	0,0,0
1265	0.02	8.78e-03	0.02	172,172,197	0.0	0.0	0.0	0,0,0
1266	0.01	8.43e-03	0.02	172,172,197	0.0	0.0	0.0	0,0,0
1267	0.01	8.54e-03	0.02	172,172,197	0.0	0.0	0.0	0,0,0
1268	0.01	8.38e-03	0.02	172,172,197	0.0	0.0	0.0	0,0,0
1269	0.01	8.43e-03	0.02	172,172,197	0.0	0.0	0.0	0,0,0
1270	0.01	8.36e-03	0.02	172,172,197	0.0	0.0	0.0	0,0,0
1271	0.01	8.37e-03	0.02	172,172,197	0.0	0.0	0.0	0,0,0
1272	0.01	8.26e-03	0.02	172,172,197	0.0	0.0	0.0	0,0,0
1273	0.01	8.17e-03	0.02	172,172,197	0.0	0.0	0.0	0,0,0
1274	0.01	8.15e-03	0.02	172,172,197	0.0	0.0	0.0	0,0,0
1275	0.01	8.07e-03	0.02	172,172,197	0.0	0.0	0.0	0,0,0
1276	0.01	8.10e-03	0.02	172,172,197	0.0	0.0	0.0	0,0,0
1277	0.01	8.04e-03	0.02	172,172,197	0.0	0.0	0.0	0,0,0
1278	0.01	8.08e-03	0.02	172,172,197	0.0	0.0	0.0	0,0,0
1279	0.01	8.02e-03	0.02	172,172,197	0.0	0.0	0.0	0,0,0
1280	0.01	8.08e-03	0.02	172,172,197	0.0	0.0	0.0	0,0,0
1281	0.01	8.03e-03	0.02	172,172,197	0.0	0.0	0.0	0,0,0
1282	0.01	8.13e-03	0.02	172,172,197	0.0	0.0	0.0	0,0,0
1283	0.01	8.10e-03	0.02	172,172,197	0.0	0.0	0.0	0,0,0
1284	0.01	8.12e-03	0.02	172,172,197	0.0	0.0	0.0	0,0,0
1285	0.01	8.10e-03	0.02	172,172,197	0.0	0.0	0.0	0,0,0
1286	0.01	8.02e-03	0.02	172,172,197	0.0	0.0	0.0	0,0,0
1287	0.01	8.01e-03	0.02	172,172,197	0.0	0.0	0.0	0,0,0
1288	0.01	7.99e-03	0.02	172,172,197	0.0	0.0	0.0	0,0,0
1289	0.01	7.99e-03	0.02	172,172,197	0.0	0.0	0.0	0,0,0
1290	0.01	8.04e-03	0.02	172,172,197	0.0	0.0	0.0	0,0,0
1291	0.01	8.04e-03	0.02	172,172,197	0.0	0.0	0.0	0,0,0
1292	0.01	8.08e-03	0.02	172,172,197	0.0	0.0	0.0	0,0,0
1293	0.01	8.09e-03	0.02	172,172,197	0.0	0.0	0.0	0,0,0
1294	0.01	8.12e-03	0.02	172,172,197	0.0	0.0	0.0	0,0,0
1295	0.01	8.15e-03	0.02	172,172,197	0.0	0.0	0.0	0,0,0
1296	0.01	8.10e-03	0.02	172,172,197	0.0	0.0	0.0	0,0,0
1297	0.01	8.14e-03	0.02	172,172,197	0.0	0.0	0.0	0,0,0
1298	0.01	8.02e-03	0.02	172,172,197	0.0	0.0	0.0	0,0,0
1299	0.01	8.08e-03	0.02	172,172,197	0.0	0.0	0.0	0,0,0
1300	0.01	8.01e-03	0.02	172,172,197	0.0	0.0	0.0	0,0,0
1301	0.01	8.07e-03	0.02	172,172,197	0.0	0.0	0.0	0,0,0
1302	0.01	8.02e-03	0.02	172,172,197	0.0	0.0	0.0	0,0,0
1303	0.01	8.08e-03	0.02	172,172,197	0.0	0.0	0.0	0,0,0
1304	0.01	8.05e-03	0.02	172,172,197	0.0	0.0	0.0	0,0,0
1305	0.01	8.12e-03	0.02	172,172,197	0.0	0.0	0.0	0,0,0
1306	0.01	8.15e-03	0.02	172,172,197	0.0	0.0	0.0	0,0,0
1307	0.01	8.24e-03	0.02	172,172,197	0.0	0.0	0.0	0,0,0
1308	0.01	8.36e-03	0.02	172,172,197	0.0	0.0	0.0	0,0,0
1309	0.01	8.34e-03	0.02	172,172,197	0.0	0.0	0.0	0,0,0
1310	0.01	8.39e-03	0.02	172,172,197	0.0	0.0	0.0	0,0,0
1311	0.01	8.34e-03	0.02	172,172,197	0.0	0.0	0.0	0,0,0
1312	0.01	8.49e-03	0.02	172,172,197	0.0	0.0	0.0	0,0,0
1313	0.01	8.39e-03	0.02	172,172,197	0.0	0.0	0.0	0,0,0
1314	0.01	8.72e-03	0.02	172,172,197	0.0	0.0	0.0	0,0,0
1315	0.01	8.73e-03	0.02	172,172,197	0.0	0.0	0.0	0,0,0
1316	0.02	0.01	0.02	172,172,197	0.0	0.0	0.0	0,0,0
1317	0.02	0.02	0.03	172,176,197	0.0	0.0	0.0	0,0,0
1598	0.02	0.02	0.03	172,172,197	0.0	0.0	0.0	0,0,0
1599	0.03	0.02	0.04	172,172,197	0.0	0.0	0.0	0,0,0

1600	0.03	0.02	0.03	172,172,197	0.0	0.0	0.0	0,0,0
1601	0.03	0.02	0.03	172,172,197	0.0	0.0	0.0	0,0,0
1602	0.03	0.02	0.04	172,172,197	0.0	0.0	0.0	0,0,0
1603	0.02	0.01	0.03	172,172,197	0.0	0.0	0.0	0,0,0
1604	0.03	0.01	0.03	172,172,197	0.0	0.0	0.0	0,0,0
1605	0.03	0.02	0.04	172,172,197	0.0	0.0	0.0	0,0,0
1606	0.03	0.02	0.04	172,172,197	0.0	0.0	0.0	0,0,0
1607	0.03	0.02	0.04	172,172,197	0.0	0.0	0.0	0,0,0
1608	0.03	0.02	0.04	172,172,197	0.0	0.0	0.0	0,0,0
1609	0.03	0.02	0.04	172,172,197	0.0	0.0	0.0	0,0,0
1610	0.03	0.02	0.04	172,172,197	0.0	0.0	0.0	0,0,0
1611	0.03	0.02	0.04	172,172,197	0.0	0.0	0.0	0,0,0
1612	0.03	0.02	0.04	172,172,197	0.0	0.0	0.0	0,0,0
1613	0.03	0.02	0.04	172,172,197	0.0	0.0	0.0	0,0,0
1614	0.03	0.02	0.03	172,172,197	0.0	0.0	0.0	0,0,0
1615	0.03	0.02	0.03	172,172,197	0.0	0.0	0.0	0,0,0
1616	0.03	0.02	0.03	172,172,197	0.0	0.0	0.0	0,0,0
1617	0.03	0.02	0.03	172,172,197	0.0	0.0	0.0	0,0,0
1618	0.03	0.02	0.03	172,172,197	0.0	0.0	0.0	0,0,0
1619	0.03	0.02	0.03	172,172,197	0.0	0.0	0.0	0,0,0
1620	0.02	0.01	0.03	172,172,197	0.0	0.0	0.0	0,0,0
1621	0.02	0.01	0.03	172,172,197	0.0	0.0	0.0	0,0,0
1622	0.03	0.02	0.03	172,172,197	0.0	0.0	0.0	0,0,0
1623	0.03	0.02	0.04	172,172,197	0.0	0.0	0.0	0,0,0
1624	0.03	0.02	0.04	172,172,197	0.0	0.0	0.0	0,0,0
1625	0.03	0.02	0.04	172,172,197	0.0	0.0	0.0	0,0,0
1626	0.03	0.02	0.04	172,172,197	0.0	0.0	0.0	0,0,0
1627	0.03	0.02	0.04	172,172,197	0.0	0.0	0.0	0,0,0
1628	0.03	0.02	0.04	172,172,197	0.0	0.0	0.0	0,0,0
1629	0.03	0.02	0.04	172,172,197	0.0	0.0	0.0	0,0,0
1630	0.03	0.02	0.04	172,172,197	0.0	0.0	0.0	0,0,0
1631	0.03	0.02	0.04	172,172,197	0.0	0.0	0.0	0,0,0
1632	0.03	0.01	0.03	172,172,197	0.0	0.0	0.0	0,0,0
1633	0.02	0.01	0.03	172,172,197	0.0	0.0	0.0	0,0,0
1634	0.02	0.01	0.03	172,172,197	0.0	0.0	0.0	0,0,0
1635	0.03	0.01	0.03	172,172,197	0.0	0.0	0.0	0,0,0
1636	0.02	0.01	0.03	172,172,197	0.0	0.0	0.0	0,0,0
1637	0.02	0.01	0.03	172,172,197	0.0	0.0	0.0	0,0,0
1638	0.02	0.01	0.03	172,172,197	0.0	0.0	0.0	0,0,0
1639	0.02	0.01	0.03	172,172,197	0.0	0.0	0.0	0,0,0
1640	0.02	0.01	0.03	172,172,197	0.0	0.0	0.0	0,0,0
1641	0.02	0.01	0.03	172,172,197	0.0	0.0	0.0	0,0,0
1642	0.02	0.01	0.03	172,172,197	0.0	0.0	0.0	0,0,0
1643	0.02	0.01	0.03	172,172,197	0.0	0.0	0.0	0,0,0
1644	0.02	0.01	0.02	172,172,197	0.0	0.0	0.0	0,0,0
1645	0.02	0.01	0.02	172,172,197	0.0	0.0	0.0	0,0,0
1646	0.02	0.01	0.02	172,172,197	0.0	0.0	0.0	0,0,0
1647	0.02	0.01	0.03	172,172,197	0.0	0.0	0.0	0,0,0
1648	0.02	0.01	0.02	172,172,197	0.0	0.0	0.0	0,0,0
1649	0.02	0.01	0.02	172,172,197	0.0	0.0	0.0	0,0,0
1650	0.02	0.01	0.02	172,172,197	0.0	0.0	0.0	0,0,0
1651	0.02	0.01	0.03	172,172,197	0.0	0.0	0.0	0,0,0
1652	0.02	0.01	0.03	172,172,197	0.0	0.0	0.0	0,0,0
1653	0.02	0.01	0.03	172,172,197	0.0	0.0	0.0	0,0,0
1654	0.02	0.01	0.03	172,172,197	0.0	0.0	0.0	0,0,0
1655	0.02	0.01	0.03	172,172,197	0.0	0.0	0.0	0,0,0
1656	0.02	0.01	0.03	172,172,197	0.0	0.0	0.0	0,0,0
1657	0.02	0.01	0.03	172,172,197	0.0	0.0	0.0	0,0,0
1658	0.02	0.01	0.03	172,172,197	0.0	0.0	0.0	0,0,0
1659	0.02	0.01	0.03	172,172,197	0.0	0.0	0.0	0,0,0
1660	0.02	0.01	0.03	172,172,197	0.0	0.0	0.0	0,0,0
1661	0.02	0.01	0.03	172,172,197	0.0	0.0	0.0	0,0,0
1662	0.02	9.58e-03	0.02	176,176,199	0.0	0.0	0.0	0,0,0
1663	0.02	9.78e-03	0.02	176,176,199	0.0	0.0	0.0	0,0,0
1664	0.02	9.77e-03	0.02	176,176,199	0.0	0.0	0.0	0,0,0
1665	0.02	9.62e-03	0.02	176,176,199	0.0	0.0	0.0	0,0,0
1666	0.02	9.27e-03	0.02	176,176,199	0.0	0.0	0.0	0,0,0
1667	0.02	9.14e-03	0.02	176,176,199	0.0	0.0	0.0	0,0,0
1668	0.02	8.73e-03	0.02	176,176,199	0.0	0.0	0.0	0,0,0
1669	0.02	9.07e-03	0.02	176,176,199	0.0	0.0	0.0	0,0,0
1670	0.02	9.26e-03	0.02	176,176,199	0.0	0.0	0.0	0,0,0
1671	0.02	9.02e-03	0.02	176,176,199	0.0	0.0	0.0	0,0,0
1672	0.01	8.54e-03	0.02	176,176,199	0.0	0.0	0.0	0,0,0
1673	0.01	8.41e-03	0.02	176,176,199	0.0	0.0	0.0	0,0,0
1674	0.01	8.31e-03	0.02	176,176,199	0.0	0.0	0.0	0,0,0
1675	0.01	8.81e-03	0.02	176,176,199	0.0	0.0	0.0	0,0,0
1676	0.01	8.94e-03	0.02	176,176,199	0.0	0.0	0.0	0,0,0
1677	0.01	8.37e-03	0.02	176,176,199	0.0	0.0	0.0	0,0,0
1678	0.01	7.99e-03	0.02	176,176,199	0.0	0.0	0.0	0,0,0

1679	0.01	8.49e-03	0.02	176,176,199	0.0	0.0	0.0	0,0,0
1680	0.01	8.41e-03	0.02	176,176,199	0.0	0.0	0.0	0,0,0
1681	0.01	8.88e-03	0.02	176,176,199	0.0	0.0	0.0	0,0,0
1682	0.02	9.12e-03	0.02	176,176,199	0.0	0.0	0.0	0,0,0
1683	0.02	8.92e-03	0.02	176,176,199	0.0	0.0	0.0	0,0,0
1684	0.01	8.47e-03	0.02	176,176,199	0.0	0.0	0.0	0,0,0
1685	0.02	8.89e-03	0.02	176,176,199	0.0	0.0	0.0	0,0,0
1686	0.02	8.95e-03	0.02	176,176,199	0.0	0.0	0.0	0,0,0
1687	0.02	9.30e-03	0.02	176,176,199	0.0	0.0	0.0	0,0,0
1688	0.02	9.46e-03	0.02	176,176,199	0.0	0.0	0.0	0,0,0
1689	0.02	9.45e-03	0.02	176,176,199	0.0	0.0	0.0	0,0,0
1690	0.02	9.41e-03	0.02	176,176,199	0.0	0.0	0.0	0,0,0
1691	0.02	9.26e-03	0.02	176,176,199	0.0	0.0	0.0	0,0,0
1692	0.02	8.09e-03	0.02	176,176,199	0.0	0.0	0.0	0,0,0
1693	0.01	7.86e-03	0.02	176,176,199	0.0	0.0	0.0	0,0,0
1694	0.01	7.75e-03	0.02	176,176,199	0.0	0.0	0.0	0,0,0
1695	0.01	7.64e-03	0.02	176,176,199	0.0	0.0	0.0	0,0,0
1696	0.01	7.69e-03	0.02	176,176,199	0.0	0.0	0.0	0,0,0
1697	0.01	7.19e-03	0.02	176,176,199	0.0	0.0	0.0	0,0,0
1698	0.01	7.22e-03	0.02	176,176,199	0.0	0.0	0.0	0,0,0
1699	0.01	7.19e-03	0.02	176,176,199	0.0	0.0	0.0	0,0,0
1700	0.01	7.09e-03	0.02	176,176,199	0.0	0.0	0.0	0,0,0
1701	0.01	6.98e-03	0.02	176,176,199	0.0	0.0	0.0	0,0,0
1702	0.01	7.04e-03	0.02	176,176,199	0.0	0.0	0.0	0,0,0
1703	0.01	6.76e-03	0.01	176,176,199	0.0	0.0	0.0	0,0,0
1704	0.01	6.88e-03	0.01	176,176,199	0.0	0.0	0.0	0,0,0
1705	0.01	6.65e-03	0.01	176,176,199	0.0	0.0	0.0	0,0,0
1706	0.01	6.56e-03	0.01	176,176,199	0.0	0.0	0.0	0,0,0
1707	0.01	6.73e-03	0.01	176,176,199	0.0	0.0	0.0	0,0,0
1708	0.01	7.00e-03	0.01	176,176,199	0.0	0.0	0.0	0,0,0
1709	0.01	6.79e-03	0.02	176,176,199	0.0	0.0	0.0	0,0,0
1710	0.01	6.90e-03	0.02	176,176,199	0.0	0.0	0.0	0,0,0
1711	0.01	7.00e-03	0.02	176,176,199	0.0	0.0	0.0	0,0,0
1712	0.01	6.97e-03	0.02	176,176,199	0.0	0.0	0.0	0,0,0
1713	0.01	6.91e-03	0.02	176,176,199	0.0	0.0	0.0	0,0,0
1714	0.01	7.54e-03	0.02	176,176,199	0.0	0.0	0.0	0,0,0
1715	0.01	7.39e-03	0.02	176,176,199	0.0	0.0	0.0	0,0,0
1716	0.01	7.50e-03	0.02	176,176,199	0.0	0.0	0.0	0,0,0
1717	0.01	7.61e-03	0.02	176,176,199	0.0	0.0	0.0	0,0,0
1718	0.01	7.82e-03	0.02	176,176,199	0.0	0.0	0.0	0,0,0
1719	0.02	9.18e-03	0.02	176,176,199	0.0	0.0	0.0	0,0,0
1720	0.02	0.01	0.02	176,162,199	0.0	0.0	0.0	0,0,0
1721	0.01	7.94e-03	0.02	172,172,197	0.0	0.0	0.0	0,0,0
1722	0.01	7.30e-03	0.02	172,172,197	0.0	0.0	0.0	0,0,0
1723	0.01	7.20e-03	0.02	172,172,197	0.0	0.0	0.0	0,0,0
1724	0.01	7.14e-03	0.02	172,172,197	0.0	0.0	0.0	0,0,0
1725	0.01	7.25e-03	0.02	172,172,197	0.0	0.0	0.0	0,0,0
1726	0.01	6.86e-03	0.02	172,172,197	0.0	0.0	0.0	0,0,0
1727	0.01	6.78e-03	0.02	172,172,197	0.0	0.0	0.0	0,0,0
1728	0.01	6.74e-03	0.01	172,172,197	0.0	0.0	0.0	0,0,0
1729	0.01	6.69e-03	0.01	172,172,197	0.0	0.0	0.0	0,0,0
1730	0.01	6.65e-03	0.01	172,172,197	0.0	0.0	0.0	0,0,0
1731	0.01	6.79e-03	0.01	172,172,197	0.0	0.0	0.0	0,0,0
1732	0.01	6.38e-03	0.01	172,172,197	0.0	0.0	0.0	0,0,0
1733	9.99e-03	6.22e-03	0.01	172,172,197	0.0	0.0	0.0	0,0,0
1734	9.74e-03	6.06e-03	0.01	172,172,197	0.0	0.0	0.0	0,0,0
1735	0.01	6.27e-03	0.01	172,172,197	0.0	0.0	0.0	0,0,0
1736	0.01	6.43e-03	0.01	172,172,197	0.0	0.0	0.0	0,0,0
1737	0.01	6.80e-03	0.01	172,172,197	0.0	0.0	0.0	0,0,0
1738	0.01	6.50e-03	0.01	172,172,197	0.0	0.0	0.0	0,0,0
1739	0.01	6.52e-03	0.01	172,172,197	0.0	0.0	0.0	0,0,0
1740	0.01	6.56e-03	0.01	172,172,197	0.0	0.0	0.0	0,0,0
1741	0.01	6.59e-03	0.01	172,172,197	0.0	0.0	0.0	0,0,0
1742	0.01	6.64e-03	0.01	172,172,197	0.0	0.0	0.0	0,0,0
1743	0.01	7.19e-03	0.02	172,172,197	0.0	0.0	0.0	0,0,0
1744	0.01	6.94e-03	0.02	172,172,197	0.0	0.0	0.0	0,0,0
1745	0.01	7.01e-03	0.02	172,172,197	0.0	0.0	0.0	0,0,0
1746	0.01	7.14e-03	0.02	172,172,197	0.0	0.0	0.0	0,0,0
1747	0.01	7.86e-03	0.02	172,172,197	0.0	0.0	0.0	0,0,0
1748	0.02	0.01	0.02	176,162,199	0.0	0.0	0.0	0,0,0
1749	0.02	0.02	0.02	172,176,197	0.0	0.0	0.0	0,0,0
1750	0.01	0.01	0.02	172,172,197	0.0	0.0	0.0	0,0,0
1751	0.01	0.01	0.02	172,176,197	0.0	0.0	0.0	0,0,0
1752	0.01	0.01	0.02	172,172,197	0.0	0.0	0.0	0,0,0
1753	0.01	8.21e-03	0.02	172,176,197	0.0	0.0	0.0	0,0,0
1754	0.01	7.30e-03	0.02	172,172,197	0.0	0.0	0.0	0,0,0
1755	0.01	7.13e-03	0.02	172,172,197	0.0	0.0	0.0	0,0,0
1756	0.01	7.19e-03	0.02	172,172,197	0.0	0.0	0.0	0,0,0
1757	0.01	7.07e-03	0.02	172,172,197	0.0	0.0	0.0	0,0,0

1758	0.01	7.17e-03	0.02	172,172,197	0.0	0.0	0.0	0,0,0
1759	0.01	6.88e-03	0.02	172,172,197	0.0	0.0	0.0	0,0,0
1760	0.01	6.87e-03	0.02	172,172,197	0.0	0.0	0.0	0,0,0
1761	0.01	6.68e-03	0.02	172,172,197	0.0	0.0	0.0	0,0,0
1762	0.01	6.69e-03	0.01	172,172,197	0.0	0.0	0.0	0,0,0
1763	0.01	6.60e-03	0.01	172,172,197	0.0	0.0	0.0	0,0,0
1764	0.01	6.63e-03	0.01	172,172,197	0.0	0.0	0.0	0,0,0
1765	0.01	6.58e-03	0.01	172,172,197	0.0	0.0	0.0	0,0,0
1766	0.01	6.62e-03	0.01	172,172,197	0.0	0.0	0.0	0,0,0
1767	0.01	6.59e-03	0.01	172,172,197	0.0	0.0	0.0	0,0,0
1768	0.01	6.63e-03	0.01	172,172,197	0.0	0.0	0.0	0,0,0
1769	0.01	6.65e-03	0.02	172,172,197	0.0	0.0	0.0	0,0,0
1770	0.01	6.72e-03	0.02	172,172,197	0.0	0.0	0.0	0,0,0
1771	0.01	6.59e-03	0.02	172,172,197	0.0	0.0	0.0	0,0,0
1772	0.01	6.55e-03	0.01	172,172,197	0.0	0.0	0.0	0,0,0
1773	0.01	6.48e-03	0.01	172,172,197	0.0	0.0	0.0	0,0,0
1774	0.01	6.45e-03	0.01	172,172,197	0.0	0.0	0.0	0,0,0
1775	0.01	6.36e-03	0.01	172,172,197	0.0	0.0	0.0	0,0,0
1776	0.01	6.39e-03	0.01	172,172,197	0.0	0.0	0.0	0,0,0
1777	0.01	6.44e-03	0.01	172,172,197	0.0	0.0	0.0	0,0,0
1778	0.01	6.45e-03	0.01	172,172,197	0.0	0.0	0.0	0,0,0
1779	0.01	6.50e-03	0.01	172,172,197	0.0	0.0	0.0	0,0,0
1780	0.01	6.54e-03	0.01	172,172,197	0.0	0.0	0.0	0,0,0
1781	0.01	6.62e-03	0.01	172,172,197	0.0	0.0	0.0	0,0,0
1782	0.01	6.67e-03	0.02	172,172,197	0.0	0.0	0.0	0,0,0
1783	0.01	6.83e-03	0.02	172,172,197	0.0	0.0	0.0	0,0,0
1784	0.01	6.71e-03	0.02	172,172,197	0.0	0.0	0.0	0,0,0
1785	0.01	6.65e-03	0.01	172,172,197	0.0	0.0	0.0	0,0,0
1786	0.01	6.61e-03	0.01	172,172,197	0.0	0.0	0.0	0,0,0
1787	0.01	6.62e-03	0.01	172,172,197	0.0	0.0	0.0	0,0,0
1788	0.01	6.59e-03	0.01	172,172,197	0.0	0.0	0.0	0,0,0
1789	0.01	6.61e-03	0.01	172,172,197	0.0	0.0	0.0	0,0,0
1790	0.01	6.60e-03	0.01	172,172,197	0.0	0.0	0.0	0,0,0
1791	0.01	6.66e-03	0.01	172,172,197	0.0	0.0	0.0	0,0,0
1792	0.01	6.66e-03	0.01	172,172,197	0.0	0.0	0.0	0,0,0
1793	0.01	6.81e-03	0.02	172,172,197	0.0	0.0	0.0	0,0,0
1794	0.01	6.87e-03	0.02	172,172,197	0.0	0.0	0.0	0,0,0
1795	0.01	7.20e-03	0.02	172,172,197	0.0	0.0	0.0	0,0,0
1796	0.01	7.09e-03	0.02	172,172,197	0.0	0.0	0.0	0,0,0
1797	0.01	7.15e-03	0.02	172,172,197	0.0	0.0	0.0	0,0,0
1798	0.01	7.12e-03	0.02	172,172,197	0.0	0.0	0.0	0,0,0
1799	0.01	7.26e-03	0.02	172,172,197	0.0	0.0	0.0	0,0,0
1800	0.01	7.74e-03	0.02	172,176,197	0.0	0.0	0.0	0,0,0
1801	0.01	9.65e-03	0.02	172,172,197	0.0	0.0	0.0	0,0,0
1802	0.01	9.98e-03	0.02	172,176,197	0.0	0.0	0.0	0,0,0
1803	0.01	0.01	0.02	172,172,197	0.0	0.0	0.0	0,0,0
1804	0.02	0.02	0.02	172,176,197	0.0	0.0	0.0	0,0,0
1805	0.02	0.01	0.02	172,172,197	0.0	0.0	0.0	0,0,0
1806	0.02	0.01	0.03	172,172,197	0.0	0.0	0.0	0,0,0
1807	0.02	0.01	0.03	172,172,197	0.0	0.0	0.0	0,0,0
1808	0.02	0.01	0.03	172,172,197	0.0	0.0	0.0	0,0,0
1809	0.02	0.01	0.03	172,172,197	0.0	0.0	0.0	0,0,0
1810	0.02	0.01	0.02	172,172,197	0.0	0.0	0.0	0,0,0
1811	0.02	0.01	0.02	172,172,197	0.0	0.0	0.0	0,0,0
1812	0.02	0.01	0.03	172,172,197	0.0	0.0	0.0	0,0,0
1813	0.02	0.01	0.03	172,172,197	0.0	0.0	0.0	0,0,0
1814	0.02	0.01	0.03	172,172,197	0.0	0.0	0.0	0,0,0
1815	0.02	0.01	0.03	172,172,197	0.0	0.0	0.0	0,0,0
1816	0.02	0.01	0.03	172,172,197	0.0	0.0	0.0	0,0,0
1817	0.02	0.01	0.03	172,172,197	0.0	0.0	0.0	0,0,0
1818	0.02	0.01	0.03	172,172,197	0.0	0.0	0.0	0,0,0
1819	0.02	0.01	0.03	172,172,197	0.0	0.0	0.0	0,0,0
1820	0.02	0.01	0.03	172,172,197	0.0	0.0	0.0	0,0,0
1821	0.02	0.01	0.03	172,172,197	0.0	0.0	0.0	0,0,0
1822	0.02	0.01	0.03	172,172,197	0.0	0.0	0.0	0,0,0
1823	0.02	0.01	0.03	172,172,197	0.0	0.0	0.0	0,0,0
1824	0.02	0.01	0.03	172,172,197	0.0	0.0	0.0	0,0,0
1825	0.02	0.01	0.03	172,172,197	0.0	0.0	0.0	0,0,0
1826	0.02	0.01	0.03	172,172,197	0.0	0.0	0.0	0,0,0
1827	0.02	0.01	0.03	172,172,197	0.0	0.0	0.0	0,0,0
1828	0.02	0.01	0.03	172,172,197	0.0	0.0	0.0	0,0,0
1829	0.02	0.01	0.03	172,172,197	0.0	0.0	0.0	0,0,0
1830	0.02	0.01	0.03	172,172,197	0.0	0.0	0.0	0,0,0
1831	0.02	0.01	0.03	172,172,197	0.0	0.0	0.0	0,0,0
1832	0.02	0.01	0.03	172,172,197	0.0	0.0	0.0	0,0,0
1833	0.02	0.01	0.03	172,172,197	0.0	0.0	0.0	0,0,0
1834	0.02	0.01	0.03	172,172,197	0.0	0.0	0.0	0,0,0
1835	0.02	0.01	0.03	172,172,197	0.0	0.0	0.0	0,0,0
1836	0.02	0.01	0.03	172,172,197	0.0	0.0	0.0	0,0,0

1837	0.02	0.01	0.03	172,172,197	0.0	0.0	0.0	0,0,0
1838	0.02	0.01	0.03	172,172,197	0.0	0.0	0.0	0,0,0
1839	0.02	0.01	0.02	172,172,197	0.0	0.0	0.0	0,0,0
1840	0.02	9.73e-03	0.02	172,172,197	0.0	0.0	0.0	0,0,0
1841	0.02	0.01	0.02	172,172,197	0.0	0.0	0.0	0,0,0
1842	0.02	0.01	0.03	172,172,197	0.0	0.0	0.0	0,0,0
1843	0.02	0.01	0.03	172,172,197	0.0	0.0	0.0	0,0,0
1844	0.02	0.01	0.02	172,172,197	0.0	0.0	0.0	0,0,0
1845	0.02	0.01	0.02	172,172,197	0.0	0.0	0.0	0,0,0
1846	0.02	0.01	0.02	172,172,197	0.0	0.0	0.0	0,0,0
1847	0.02	0.01	0.03	172,172,197	0.0	0.0	0.0	0,0,0
1848	0.02	0.01	0.03	172,172,197	0.0	0.0	0.0	0,0,0
1849	0.02	0.01	0.03	172,172,197	0.0	0.0	0.0	0,0,0
1850	0.02	0.01	0.02	172,172,197	0.0	0.0	0.0	0,0,0
1851	0.02	0.01	0.02	172,172,197	0.0	0.0	0.0	0,0,0
1852	0.02	0.01	0.02	172,172,197	0.0	0.0	0.0	0,0,0
1853	0.02	0.01	0.02	172,172,197	0.0	0.0	0.0	0,0,0
1854	0.02	0.01	0.02	172,172,197	0.0	0.0	0.0	0,0,0
1855	0.02	0.01	0.02	172,172,197	0.0	0.0	0.0	0,0,0
1856	0.02	0.01	0.02	172,172,197	0.0	0.0	0.0	0,0,0
1857	0.02	0.01	0.02	172,172,197	0.0	0.0	0.0	0,0,0
1858	0.02	0.01	0.02	172,172,197	0.0	0.0	0.0	0,0,0
1859	0.02	0.01	0.02	168,172,197	0.0	0.0	0.0	0,0,0
1860	0.02	0.01	0.03	172,172,199	0.0	0.0	0.0	0,0,0
1861	0.02	0.01	0.03	172,172,197	0.0	0.0	0.0	0,0,0
1862	0.02	0.01	0.02	172,172,197	0.0	0.0	0.0	0,0,0
1863	0.02	0.01	0.02	172,172,197	0.0	0.0	0.0	0,0,0
1864	0.02	0.01	0.02	172,172,197	0.0	0.0	0.0	0,0,0
1865	0.02	0.01	0.03	172,172,197	0.0	0.0	0.0	0,0,0
1866	0.02	0.01	0.03	172,172,197	0.0	0.0	0.0	0,0,0
1867	0.02	0.01	0.02	172,172,197	0.0	0.0	0.0	0,0,0
1868	0.02	9.61e-03	0.02	172,172,197	0.0	0.0	0.0	0,0,0
1869	0.01	8.65e-03	0.02	176,176,199	0.0	0.0	0.0	0,0,0
1870	0.02	9.07e-03	0.02	176,176,199	0.0	0.0	0.0	0,0,0
1871	0.02	9.38e-03	0.02	176,176,199	0.0	0.0	0.0	0,0,0
1872	0.02	9.26e-03	0.02	176,176,199	0.0	0.0	0.0	0,0,0
1873	0.01	8.86e-03	0.02	176,176,199	0.0	0.0	0.0	0,0,0
1874	0.02	9.00e-03	0.02	176,176,199	0.0	0.0	0.0	0,0,0
1875	0.01	8.77e-03	0.02	176,176,199	0.0	0.0	0.0	0,0,0
1876	0.02	9.24e-03	0.02	176,176,199	0.0	0.0	0.0	0,0,0
1877	0.02	9.43e-03	0.02	176,176,199	0.0	0.0	0.0	0,0,0
1878	0.02	9.15e-03	0.02	176,176,199	0.0	0.0	0.0	0,0,0
1879	0.01	8.65e-03	0.02	176,176,199	0.0	0.0	0.0	0,0,0
1880	0.01	8.56e-03	0.02	176,176,199	0.0	0.0	0.0	0,0,0
1881	0.01	8.41e-03	0.02	176,176,199	0.0	0.0	0.0	0,0,0
1882	0.01	8.97e-03	0.02	176,176,199	0.0	0.0	0.0	0,0,0
1883	0.01	9.16e-03	0.02	176,176,199	0.0	0.0	0.0	0,0,0
1884	0.01	8.25e-03	0.02	176,176,199	0.0	0.0	0.0	0,0,0
1885	0.01	7.97e-03	0.02	176,176,199	0.0	0.0	0.0	0,0,0
1886	0.01	8.63e-03	0.02	176,176,199	0.0	0.0	0.0	0,0,0
1887	0.01	8.54e-03	0.02	176,176,199	0.0	0.0	0.0	0,0,0
1888	0.01	9.02e-03	0.02	176,176,199	0.0	0.0	0.0	0,0,0
1889	0.02	9.29e-03	0.02	176,176,199	0.0	0.0	0.0	0,0,0
1890	0.01	9.09e-03	0.02	176,176,199	0.0	0.0	0.0	0,0,0
1891	0.01	8.60e-03	0.02	176,176,199	0.0	0.0	0.0	0,0,0
1892	0.01	8.91e-03	0.02	176,176,199	0.0	0.0	0.0	0,0,0
1893	0.01	8.70e-03	0.02	176,176,199	0.0	0.0	0.0	0,0,0
1894	0.02	9.10e-03	0.02	176,176,199	0.0	0.0	0.0	0,0,0
1895	0.02	9.23e-03	0.02	176,176,199	0.0	0.0	0.0	0,0,0
1896	0.02	8.91e-03	0.02	176,176,199	0.0	0.0	0.0	0,0,0
1897	0.01	8.56e-03	0.02	176,176,199	0.0	0.0	0.0	0,0,0
1898	0.01	8.02e-03	0.02	176,176,199	0.0	0.0	0.0	0,0,0
1899	0.01	7.57e-03	0.02	176,176,199	0.0	0.0	0.0	0,0,0
1900	0.01	7.60e-03	0.02	176,176,199	0.0	0.0	0.0	0,0,0
1901	0.01	7.51e-03	0.02	176,176,199	0.0	0.0	0.0	0,0,0
1902	0.01	7.32e-03	0.02	176,176,199	0.0	0.0	0.0	0,0,0
1903	0.01	7.42e-03	0.02	176,176,199	0.0	0.0	0.0	0,0,0
1904	0.01	7.19e-03	0.02	176,176,199	0.0	0.0	0.0	0,0,0
1905	0.01	7.36e-03	0.02	176,176,199	0.0	0.0	0.0	0,0,0
1906	0.01	7.43e-03	0.02	176,176,199	0.0	0.0	0.0	0,0,0
1907	0.01	7.30e-03	0.02	176,176,199	0.0	0.0	0.0	0,0,0
1908	0.01	7.10e-03	0.02	176,176,199	0.0	0.0	0.0	0,0,0
1909	0.01	7.09e-03	0.01	176,176,199	0.0	0.0	0.0	0,0,0
1910	0.01	6.94e-03	0.01	176,176,199	0.0	0.0	0.0	0,0,0
1911	0.01	7.15e-03	0.01	176,176,199	0.0	0.0	0.0	0,0,0
1912	0.01	6.71e-03	0.01	176,176,199	0.0	0.0	0.0	0,0,0
1913	0.01	6.67e-03	0.01	176,176,199	0.0	0.0	0.0	0,0,0
1914	0.01	7.04e-03	0.01	176,176,199	0.0	0.0	0.0	0,0,0
1915	0.01	7.15e-03	0.01	176,176,199	0.0	0.0	0.0	0,0,0

1916	0.01	6.86e-03	0.01	176,176,199	0.0	0.0	0.0	0,0,0
1917	0.01	7.04e-03	0.01	176,176,199	0.0	0.0	0.0	0,0,0
1918	0.01	7.17e-03	0.02	176,176,199	0.0	0.0	0.0	0,0,0
1919	0.01	7.10e-03	0.02	176,176,199	0.0	0.0	0.0	0,0,0
1920	0.01	6.91e-03	0.01	176,176,199	0.0	0.0	0.0	0,0,0
1921	0.01	7.38e-03	0.02	176,176,199	0.0	0.0	0.0	0,0,0
1922	0.01	7.06e-03	0.02	176,176,199	0.0	0.0	0.0	0,0,0
1923	0.01	7.24e-03	0.02	176,176,199	0.0	0.0	0.0	0,0,0
1924	0.01	7.34e-03	0.02	176,176,199	0.0	0.0	0.0	0,0,0
1925	0.01	7.29e-03	0.02	176,176,199	0.0	0.0	0.0	0,0,0
1926	0.01	7.96e-03	0.02	176,176,199	0.0	0.0	0.0	0,0,0
1927	0.01	7.92e-03	0.02	176,176,199	0.0	0.0	0.0	0,0,0
1928	0.01	6.90e-03	0.02	172,172,197	0.0	0.0	0.0	0,0,0
1929	0.01	6.65e-03	0.01	172,172,197	0.0	0.0	0.0	0,0,0
1930	0.01	6.56e-03	0.01	172,172,197	0.0	0.0	0.0	0,0,0
1931	0.01	6.50e-03	0.01	172,172,197	0.0	0.0	0.0	0,0,0
1932	0.01	6.64e-03	0.01	172,172,197	0.0	0.0	0.0	0,0,0
1933	0.01	6.35e-03	0.01	172,172,197	0.0	0.0	0.0	0,0,0
1934	0.01	6.32e-03	0.01	172,172,197	0.0	0.0	0.0	0,0,0
1935	0.01	6.30e-03	0.01	172,172,197	0.0	0.0	0.0	0,0,0
1936	0.01	6.26e-03	0.01	172,172,197	0.0	0.0	0.0	0,0,0
1937	0.01	6.23e-03	0.01	172,172,197	0.0	0.0	0.0	0,0,0
1938	0.01	6.34e-03	0.01	172,172,197	0.0	0.0	0.0	0,0,0
1939	9.96e-03	6.20e-03	0.01	176,176,199	0.0	0.0	0.0	0,0,0
1940	9.54e-03	5.94e-03	0.01	172,172,197	0.0	0.0	0.0	0,0,0
1941	9.25e-03	5.76e-03	0.01	172,172,197	0.0	0.0	0.0	0,0,0
1942	1.00e-02	6.22e-03	0.01	176,176,199	0.0	0.0	0.0	0,0,0
1943	0.01	6.32e-03	0.01	176,176,199	0.0	0.0	0.0	0,0,0
1944	0.01	6.38e-03	0.01	172,172,197	0.0	0.0	0.0	0,0,0
1945	9.57e-03	5.96e-03	0.01	176,176,199	0.0	0.0	0.0	0,0,0
1946	9.93e-03	6.07e-03	0.01	172,172,197	0.0	0.0	0.0	0,0,0
1947	0.01	6.11e-03	0.01	172,172,197	0.0	0.0	0.0	0,0,0
1948	0.01	6.12e-03	0.01	172,172,197	0.0	0.0	0.0	0,0,0
1949	0.01	6.14e-03	0.01	172,172,197	0.0	0.0	0.0	0,0,0
1950	0.01	6.62e-03	0.01	172,172,197	0.0	0.0	0.0	0,0,0
1951	0.01	6.30e-03	0.01	172,172,197	0.0	0.0	0.0	0,0,0
1952	0.01	6.37e-03	0.01	172,172,197	0.0	0.0	0.0	0,0,0
1953	0.01	6.47e-03	0.01	172,172,197	0.0	0.0	0.0	0,0,0
1954	0.01	6.70e-03	0.01	172,172,197	0.0	0.0	0.0	0,0,0
1955	0.01	7.98e-03	0.02	176,162,199	0.0	0.0	0.0	0,0,0
1956	0.01	0.02	0.02	172,172,197	0.0	0.0	0.0	0,0,0
1957	0.01	0.01	0.02	172,172,197	0.0	0.0	0.0	0,0,0
1958	0.01	7.49e-03	0.02	172,176,197	0.0	0.0	0.0	0,0,0
1959	0.01	0.01	0.02	172,172,197	0.0	0.0	0.0	0,0,0
1960	0.01	6.43e-03	0.01	172,172,197	0.0	0.0	0.0	0,0,0
1961	0.01	6.58e-03	0.01	172,172,197	0.0	0.0	0.0	0,0,0
1962	0.01	6.23e-03	0.01	172,172,197	0.0	0.0	0.0	0,0,0
1963	0.01	6.41e-03	0.01	172,172,197	0.0	0.0	0.0	0,0,0
1964	0.01	6.15e-03	0.01	172,172,197	0.0	0.0	0.0	0,0,0
1965	0.01	6.32e-03	0.01	172,172,197	0.0	0.0	0.0	0,0,0
1966	9.99e-03	5.94e-03	0.01	172,172,197	0.0	0.0	0.0	0,0,0
1967	0.01	6.04e-03	0.01	172,172,197	0.0	0.0	0.0	0,0,0
1968	9.74e-03	5.79e-03	0.01	172,172,197	0.0	0.0	0.0	0,0,0
1969	9.86e-03	5.89e-03	0.01	172,172,197	0.0	0.0	0.0	0,0,0
1970	9.62e-03	5.71e-03	0.01	172,172,197	0.0	0.0	0.0	0,0,0
1971	9.73e-03	5.81e-03	0.01	172,172,197	0.0	0.0	0.0	0,0,0
1972	9.55e-03	5.67e-03	0.01	172,172,197	0.0	0.0	0.0	0,0,0
1973	9.62e-03	5.76e-03	0.01	172,172,197	0.0	0.0	0.0	0,0,0
1974	9.51e-03	5.65e-03	0.01	172,172,197	0.0	0.0	0.0	0,0,0
1975	9.55e-03	5.75e-03	0.01	172,172,197	0.0	0.0	0.0	0,0,0
1976	9.58e-03	5.69e-03	0.01	172,172,197	0.0	0.0	0.0	0,0,0
1977	9.59e-03	5.76e-03	0.01	172,172,197	0.0	0.0	0.0	0,0,0
1978	9.53e-03	5.66e-03	0.01	172,172,197	0.0	0.0	0.0	0,0,0
1979	9.48e-03	5.62e-03	0.01	172,172,197	0.0	0.0	0.0	0,0,0
1980	9.33e-03	5.55e-03	0.01	172,172,197	0.0	0.0	0.0	0,0,0
1981	9.33e-03	5.56e-03	0.01	172,172,197	0.0	0.0	0.0	0,0,0
1982	9.30e-03	5.55e-03	0.01	172,172,197	0.0	0.0	0.0	0,0,0
1983	9.29e-03	5.55e-03	0.01	172,172,197	0.0	0.0	0.0	0,0,0
1984	9.41e-03	5.62e-03	0.01	172,172,197	0.0	0.0	0.0	0,0,0
1985	9.42e-03	5.63e-03	0.01	172,172,197	0.0	0.0	0.0	0,0,0
1986	9.46e-03	5.64e-03	0.01	172,172,197	0.0	0.0	0.0	0,0,0
1987	9.50e-03	5.66e-03	0.01	172,172,197	0.0	0.0	0.0	0,0,0
1988	9.53e-03	5.71e-03	0.01	172,172,197	0.0	0.0	0.0	0,0,0
1989	9.61e-03	5.71e-03	0.01	172,172,197	0.0	0.0	0.0	0,0,0
1990	9.74e-03	5.86e-03	0.01	172,172,197	0.0	0.0	0.0	0,0,0
1991	9.65e-03	5.75e-03	0.01	172,172,197	0.0	0.0	0.0	0,0,0
1992	9.57e-03	5.77e-03	0.01	172,172,197	0.0	0.0	0.0	0,0,0
1993	9.53e-03	5.69e-03	0.01	172,172,197	0.0	0.0	0.0	0,0,0
1994	9.61e-03	5.77e-03	0.01	172,172,197	0.0	0.0	0.0	0,0,0

1995	9.57e-03	5.71e-03	0.01	172,172,197	0.0	0.0	0.0	0,0,0
1996	9.68e-03	5.79e-03	0.01	172,172,197	0.0	0.0	0.0	0,0,0
1997	9.62e-03	5.74e-03	0.01	172,172,197	0.0	0.0	0.0	0,0,0
1998	9.77e-03	5.85e-03	0.01	172,172,197	0.0	0.0	0.0	0,0,0
1999	9.70e-03	5.79e-03	0.01	172,172,197	0.0	0.0	0.0	0,0,0
2000	9.94e-03	5.97e-03	0.01	172,172,197	0.0	0.0	0.0	0,0,0
2001	9.96e-03	5.94e-03	0.01	172,172,197	0.0	0.0	0.0	0,0,0
2002	0.01	6.33e-03	0.01	172,172,197	0.0	0.0	0.0	0,0,0
2003	0.01	6.18e-03	0.01	172,172,197	0.0	0.0	0.0	0,0,0
2004	0.01	6.36e-03	0.01	172,172,197	0.0	0.0	0.0	0,0,0
2005	0.01	6.23e-03	0.01	172,172,197	0.0	0.0	0.0	0,0,0
2006	0.01	6.53e-03	0.01	172,172,197	0.0	0.0	0.0	0,0,0
2007	0.01	6.44e-03	0.01	172,172,197	0.0	0.0	0.0	0,0,0
2008	0.01	9.85e-03	0.02	172,172,197	0.0	0.0	0.0	0,0,0
2009	0.01	7.14e-03	0.02	172,176,197	0.0	0.0	0.0	0,0,0
2010	0.01	0.01	0.02	172,172,197	0.0	0.0	0.0	0,0,0
2011	0.01	0.02	0.02	172,172,197	0.0	0.0	0.0	0,0,0
2012	0.02	0.01	0.03	172,172,197	0.0	0.0	0.0	0,0,0
2013	0.03	0.01	0.03	172,172,197	0.0	0.0	0.0	0,0,0
2014	0.02	0.01	0.03	172,172,197	0.0	0.0	0.0	0,0,0
2015	0.02	0.01	0.03	172,172,197	0.0	0.0	0.0	0,0,0
2016	0.02	0.01	0.03	172,172,197	0.0	0.0	0.0	0,0,0
2017	0.02	0.01	0.03	172,172,197	0.0	0.0	0.0	0,0,0
2018	0.02	0.01	0.03	172,172,197	0.0	0.0	0.0	0,0,0
2019	0.03	0.01	0.04	172,172,197	0.0	0.0	0.0	0,0,0
2020	0.03	0.02	0.04	172,172,197	0.0	0.0	0.0	0,0,0
2021	0.03	0.02	0.04	172,172,197	0.0	0.0	0.0	0,0,0
2022	0.03	0.01	0.03	172,172,197	0.0	0.0	0.0	0,0,0
2023	0.02	0.01	0.03	172,172,197	0.0	0.0	0.0	0,0,0
2024	0.02	0.01	0.03	172,172,197	0.0	0.0	0.0	0,0,0
2025	0.03	0.01	0.03	172,172,197	0.0	0.0	0.0	0,0,0
2026	0.03	0.02	0.03	172,172,197	0.0	0.0	0.0	0,0,0
2027	0.03	0.01	0.03	172,172,197	0.0	0.0	0.0	0,0,0
2028	0.02	0.01	0.03	172,172,197	0.0	0.0	0.0	0,0,0
2029	0.02	0.01	0.03	172,172,197	0.0	0.0	0.0	0,0,0
2030	0.02	0.01	0.03	172,172,197	0.0	0.0	0.0	0,0,0
2031	0.02	0.01	0.03	172,172,197	0.0	0.0	0.0	0,0,0
2032	0.02	0.01	0.03	172,172,197	0.0	0.0	0.0	0,0,0
2033	0.02	0.01	0.03	172,172,197	0.0	0.0	0.0	0,0,0
2034	0.02	0.01	0.03	172,172,197	0.0	0.0	0.0	0,0,0
2035	0.02	0.01	0.03	172,172,197	0.0	0.0	0.0	0,0,0
2036	0.02	0.01	0.03	172,172,197	0.0	0.0	0.0	0,0,0
2037	0.02	0.01	0.03	172,172,197	0.0	0.0	0.0	0,0,0
2038	0.03	0.01	0.03	172,172,197	0.0	0.0	0.0	0,0,0
2039	0.02	0.01	0.03	172,172,197	0.0	0.0	0.0	0,0,0
2040	0.02	0.01	0.03	172,172,197	0.0	0.0	0.0	0,0,0
2041	0.02	0.01	0.03	172,172,197	0.0	0.0	0.0	0,0,0
2042	0.03	0.01	0.03	172,172,197	0.0	0.0	0.0	0,0,0
2043	0.03	0.01	0.03	172,172,197	0.0	0.0	0.0	0,0,0
2044	0.03	0.01	0.03	172,172,197	0.0	0.0	0.0	0,0,0
2045	0.03	0.01	0.03	172,172,197	0.0	0.0	0.0	0,0,0
2046	0.02	0.01	0.03	172,172,197	0.0	0.0	0.0	0,0,0
2047	0.02	0.01	0.03	172,172,197	0.0	0.0	0.0	0,0,0
2048	0.02	0.01	0.03	172,172,197	0.0	0.0	0.0	0,0,0
2049	0.02	0.01	0.03	172,172,197	0.0	0.0	0.0	0,0,0
2050	0.02	0.01	0.03	172,172,197	0.0	0.0	0.0	0,0,0
2051	0.02	0.01	0.03	172,172,197	0.0	0.0	0.0	0,0,0
2052	0.02	0.01	0.03	172,172,197	0.0	0.0	0.0	0,0,0
2053	0.02	0.01	0.03	172,172,197	0.0	0.0	0.0	0,0,0
2054	0.02	0.01	0.03	172,172,197	0.0	0.0	0.0	0,0,0
2055	0.02	0.01	0.03	172,172,197	0.0	0.0	0.0	0,0,0
2056	0.02	0.01	0.03	172,172,197	0.0	0.0	0.0	0,0,0
2057	0.02	0.01	0.02	172,172,197	0.0	0.0	0.0	0,0,0
2058	0.02	0.01	0.02	172,172,197	0.0	0.0	0.0	0,0,0
2059	0.02	0.01	0.02	172,172,197	0.0	0.0	0.0	0,0,0
2060	0.02	0.01	0.02	172,172,197	0.0	0.0	0.0	0,0,0
2061	0.02	0.01	0.02	172,172,197	0.0	0.0	0.0	0,0,0
2062	0.02	0.01	0.02	172,172,197	0.0	0.0	0.0	0,0,0
2063	0.02	9.50e-03	0.02	172,172,197	0.0	0.0	0.0	0,0,0
2064	0.02	0.01	0.02	172,172,197	0.0	0.0	0.0	0,0,0
2065	0.02	0.01	0.02	172,172,197	0.0	0.0	0.0	0,0,0
2066	0.02	0.01	0.02	172,172,197	0.0	0.0	0.0	0,0,0
2067	0.02	0.01	0.03	172,172,197	0.0	0.0	0.0	0,0,0
2068	0.02	0.01	0.03	172,172,197	0.0	0.0	0.0	0,0,0
2069	0.02	0.01	0.02	172,172,197	0.0	0.0	0.0	0,0,0
2070	0.02	0.01	0.03	172,172,197	0.0	0.0	0.0	0,0,0
2071	0.02	0.01	0.03	172,172,197	0.0	0.0	0.0	0,0,0
2072	0.02	0.01	0.03	172,172,197	0.0	0.0	0.0	0,0,0
2073	0.02	0.01	0.03	172,172,197	0.0	0.0	0.0	0,0,0

2074	0.02	0.01	0.03	172,172,197	0.0	0.0	0.0	0,0,0
2075	0.02	0.01	0.03	172,172,197	0.0	0.0	0.0	0,0,0
2076	0.02	9.79e-03	0.02	176,176,199	0.0	0.0	0.0	0,0,0
2077	0.02	0.01	0.03	176,176,199	0.0	0.0	0.0	0,0,0
2078	0.02	0.01	0.02	176,176,199	0.0	0.0	0.0	0,0,0
2079	0.02	0.01	0.02	176,176,199	0.0	0.0	0.0	0,0,0
2080	0.02	9.85e-03	0.02	176,176,199	0.0	0.0	0.0	0,0,0
2081	0.02	9.85e-03	0.02	176,176,199	0.0	0.0	0.0	0,0,0
2082	0.02	9.39e-03	0.02	176,176,199	0.0	0.0	0.0	0,0,0
2083	0.02	9.82e-03	0.02	176,176,199	0.0	0.0	0.0	0,0,0
2084	0.02	9.95e-03	0.02	176,176,199	0.0	0.0	0.0	0,0,0
2085	0.02	9.62e-03	0.02	176,176,199	0.0	0.0	0.0	0,0,0
2086	0.02	9.10e-03	0.02	176,176,199	0.0	0.0	0.0	0,0,0
2087	0.02	9.02e-03	0.02	176,176,199	0.0	0.0	0.0	0,0,0
2088	0.01	8.54e-03	0.02	176,176,199	0.0	0.0	0.0	0,0,0
2089	0.01	8.91e-03	0.02	176,176,199	0.0	0.0	0.0	0,0,0
2090	0.01	9.31e-03	0.02	176,176,199	0.0	0.0	0.0	0,0,0
2091	0.01	7.97e-03	0.02	176,176,199	0.0	0.0	0.0	0,0,0
2092	0.01	7.79e-03	0.02	176,176,199	0.0	0.0	0.0	0,0,0
2093	0.01	8.83e-03	0.02	176,176,199	0.0	0.0	0.0	0,0,0
2094	0.02	8.91e-03	0.02	176,176,199	0.0	0.0	0.0	0,0,0
2095	0.02	9.40e-03	0.02	176,176,199	0.0	0.0	0.0	0,0,0
2096	0.02	9.71e-03	0.02	176,176,199	0.0	0.0	0.0	0,0,0
2097	0.02	9.56e-03	0.02	176,176,199	0.0	0.0	0.0	0,0,0
2098	0.02	9.09e-03	0.02	176,176,199	0.0	0.0	0.0	0,0,0
2099	0.02	9.59e-03	0.02	176,176,199	0.0	0.0	0.0	0,0,0
2100	0.02	9.59e-03	0.02	176,176,199	0.0	0.0	0.0	0,0,0
2101	0.02	0.01	0.02	176,176,199	0.0	0.0	0.0	0,0,0
2102	0.02	0.01	0.02	176,176,199	0.0	0.0	0.0	0,0,0
2103	0.02	0.01	0.02	176,176,199	0.0	0.0	0.0	0,0,0
2104	0.02	9.59e-03	0.02	176,176,199	0.0	0.0	0.0	0,0,0
2105	0.02	8.95e-03	0.02	176,176,199	0.0	0.0	0.0	0,0,0
2106	0.02	8.79e-03	0.02	176,176,199	0.0	0.0	0.0	0,0,0
2107	0.02	8.65e-03	0.02	176,176,199	0.0	0.0	0.0	0,0,0
2108	0.02	8.48e-03	0.02	176,176,199	0.0	0.0	0.0	0,0,0
2109	0.01	8.26e-03	0.02	176,176,199	0.0	0.0	0.0	0,0,0
2110	0.01	8.20e-03	0.02	176,176,199	0.0	0.0	0.0	0,0,0
2111	0.01	7.82e-03	0.02	176,176,199	0.0	0.0	0.0	0,0,0
2112	0.01	8.00e-03	0.02	176,176,199	0.0	0.0	0.0	0,0,0
2113	0.01	8.03e-03	0.02	176,176,199	0.0	0.0	0.0	0,0,0
2114	0.01	7.84e-03	0.02	176,176,199	0.0	0.0	0.0	0,0,0
2115	0.01	7.60e-03	0.02	176,176,199	0.0	0.0	0.0	0,0,0
2116	0.01	7.53e-03	0.02	176,176,199	0.0	0.0	0.0	0,0,0
2117	0.01	7.05e-03	0.01	176,176,199	0.0	0.0	0.0	0,0,0
2118	0.01	7.42e-03	0.02	176,176,199	0.0	0.0	0.0	0,0,0
2119	0.01	6.56e-03	0.01	176,176,199	0.0	0.0	0.0	0,0,0
2120	0.01	6.69e-03	0.01	176,176,199	0.0	0.0	0.0	0,0,0
2121	0.01	7.34e-03	0.02	176,176,199	0.0	0.0	0.0	0,0,0
2122	0.01	7.47e-03	0.02	176,176,199	0.0	0.0	0.0	0,0,0
2123	0.01	7.21e-03	0.02	176,176,199	0.0	0.0	0.0	0,0,0
2124	0.01	7.41e-03	0.02	176,176,199	0.0	0.0	0.0	0,0,0
2125	0.01	7.58e-03	0.02	176,176,199	0.0	0.0	0.0	0,0,0
2126	0.01	7.53e-03	0.02	176,176,199	0.0	0.0	0.0	0,0,0
2127	0.01	7.34e-03	0.02	176,176,199	0.0	0.0	0.0	0,0,0
2128	0.01	8.04e-03	0.02	176,176,199	0.0	0.0	0.0	0,0,0
2129	0.01	7.81e-03	0.02	176,176,199	0.0	0.0	0.0	0,0,0
2130	0.01	8.02e-03	0.02	176,176,199	0.0	0.0	0.0	0,0,0
2131	0.01	8.19e-03	0.02	176,176,199	0.0	0.0	0.0	0,0,0
2132	0.02	8.31e-03	0.02	176,176,199	0.0	0.0	0.0	0,0,0
2133	0.02	8.82e-03	0.02	176,176,199	0.0	0.0	0.0	0,0,0
2134	0.01	8.55e-03	0.02	176,162,199	0.0	0.0	0.0	0,0,0
2135	0.01	7.62e-03	0.02	172,172,197	0.0	0.0	0.0	0,0,0
2136	0.01	7.27e-03	0.02	172,172,197	0.0	0.0	0.0	0,0,0
2137	0.01	7.07e-03	0.02	172,172,197	0.0	0.0	0.0	0,0,0
2138	0.01	6.96e-03	0.02	172,172,197	0.0	0.0	0.0	0,0,0
2139	0.01	6.94e-03	0.02	172,172,197	0.0	0.0	0.0	0,0,0
2140	0.01	6.66e-03	0.01	172,172,197	0.0	0.0	0.0	0,0,0
2141	0.01	6.63e-03	0.01	172,172,197	0.0	0.0	0.0	0,0,0
2142	0.01	6.59e-03	0.01	172,172,197	0.0	0.0	0.0	0,0,0
2143	0.01	6.50e-03	0.01	172,172,197	0.0	0.0	0.0	0,0,0
2144	0.01	6.44e-03	0.01	172,172,197	0.0	0.0	0.0	0,0,0
2145	0.01	6.46e-03	0.01	172,172,197	0.0	0.0	0.0	0,0,0
2146	9.87e-03	6.14e-03	0.01	172,172,197	0.0	0.0	0.0	0,0,0
2147	9.06e-03	5.64e-03	0.01	172,172,197	0.0	0.0	0.0	0,0,0
2148	8.92e-03	5.55e-03	0.01	176,176,199	0.0	0.0	0.0	0,0,0
2149	0.01	6.35e-03	0.01	176,176,199	0.0	0.0	0.0	0,0,0
2150	0.01	6.32e-03	0.01	172,172,197	0.0	0.0	0.0	0,0,0
2151	0.01	6.48e-03	0.01	172,172,197	0.0	0.0	0.0	0,0,0
2152	0.01	6.13e-03	0.01	172,172,197	0.0	0.0	0.0	0,0,0

2153	0.01	6.15e-03	0.01	172,172,197	0.0	0.0	0.0	0,0,0
2154	0.01	6.23e-03	0.01	176,176,199	0.0	0.0	0.0	0,0,0
2155	0.01	6.26e-03	0.01	172,172,197	0.0	0.0	0.0	0,0,0
2156	0.01	6.26e-03	0.01	172,172,197	0.0	0.0	0.0	0,0,0
2157	0.01	6.89e-03	0.02	172,172,197	0.0	0.0	0.0	0,0,0
2158	0.01	6.60e-03	0.02	172,172,197	0.0	0.0	0.0	0,0,0
2159	0.01	6.70e-03	0.02	172,172,197	0.0	0.0	0.0	0,0,0
2160	0.01	6.89e-03	0.02	172,172,197	0.0	0.0	0.0	0,0,0
2161	0.01	7.22e-03	0.02	172,172,197	0.0	0.0	0.0	0,0,0
2162	0.01	8.90e-03	0.02	176,162,199	0.0	0.0	0.0	0,0,0
2163	0.01	0.01	0.02	172,176,197	0.0	0.0	0.0	0,0,0
2164	0.01	0.01	0.02	172,176,197	0.0	0.0	0.0	0,0,0
2165	0.01	8.58e-03	0.01	172,176,197	0.0	0.0	0.0	0,0,0
2166	0.01	0.01	0.01	172,172,197	0.0	0.0	0.0	0,0,0
2167	0.01	6.15e-03	0.01	172,172,197	0.0	0.0	0.0	0,0,0
2168	0.01	6.18e-03	0.01	172,172,197	0.0	0.0	0.0	0,0,0
2169	9.95e-03	5.95e-03	0.01	172,172,197	0.0	0.0	0.0	0,0,0
2170	0.01	5.99e-03	0.01	172,172,197	0.0	0.0	0.0	0,0,0
2171	0.01	5.94e-03	0.01	172,172,197	0.0	0.0	0.0	0,0,0
2172	0.01	5.87e-03	0.01	172,172,197	0.0	0.0	0.0	0,0,0
2173	9.65e-03	5.71e-03	0.01	172,172,197	0.0	0.0	0.0	0,0,0
2174	9.54e-03	5.58e-03	0.01	172,172,197	0.0	0.0	0.0	0,0,0
2175	9.28e-03	5.52e-03	0.01	172,172,197	0.0	0.0	0.0	0,0,0
2176	9.33e-03	5.43e-03	0.01	172,172,197	0.0	0.0	0.0	0,0,0
2177	9.10e-03	5.41e-03	0.01	172,172,197	0.0	0.0	0.0	0,0,0
2178	9.18e-03	5.34e-03	0.01	172,172,197	0.0	0.0	0.0	0,0,0
2179	9.03e-03	5.37e-03	0.01	172,172,197	0.0	0.0	0.0	0,0,0
2180	9.04e-03	5.28e-03	0.01	172,172,197	0.0	0.0	0.0	0,0,0
2181	8.98e-03	5.35e-03	0.01	172,172,197	0.0	0.0	0.0	0,0,0
2182	8.94e-03	5.25e-03	0.01	172,172,197	0.0	0.0	0.0	0,0,0
2183	9.23e-03	5.43e-03	0.01	172,172,197	0.0	0.0	0.0	0,0,0
2184	9.10e-03	5.31e-03	0.01	172,172,197	0.0	0.0	0.0	0,0,0
2185	9.15e-03	5.37e-03	0.01	172,172,197	0.0	0.0	0.0	0,0,0
2186	9.10e-03	5.33e-03	0.01	172,172,197	0.0	0.0	0.0	0,0,0
2187	8.88e-03	5.27e-03	0.01	172,172,197	0.0	0.0	0.0	0,0,0
2188	8.89e-03	5.30e-03	0.01	172,172,197	0.0	0.0	0.0	0,0,0
2189	8.75e-03	5.27e-03	0.01	172,172,197	0.0	0.0	0.0	0,0,0
2190	8.73e-03	5.23e-03	0.01	172,172,197	0.0	0.0	0.0	0,0,0
2191	8.84e-03	5.30e-03	0.01	172,172,197	0.0	0.0	0.0	0,0,0
2192	8.87e-03	5.32e-03	0.01	172,172,197	0.0	0.0	0.0	0,0,0
2193	8.91e-03	5.32e-03	0.01	172,172,197	0.0	0.0	0.0	0,0,0
2194	8.96e-03	5.35e-03	0.01	172,172,197	0.0	0.0	0.0	0,0,0
2195	9.12e-03	5.34e-03	0.01	172,172,197	0.0	0.0	0.0	0,0,0
2196	9.24e-03	5.44e-03	0.01	172,172,197	0.0	0.0	0.0	0,0,0
2197	9.18e-03	5.36e-03	0.01	172,172,197	0.0	0.0	0.0	0,0,0
2198	9.37e-03	5.54e-03	0.01	172,172,197	0.0	0.0	0.0	0,0,0
2199	8.97e-03	5.28e-03	0.01	172,172,197	0.0	0.0	0.0	0,0,0
2200	9.03e-03	5.41e-03	0.01	172,172,197	0.0	0.0	0.0	0,0,0
2201	9.03e-03	5.29e-03	0.01	172,172,197	0.0	0.0	0.0	0,0,0
2202	9.03e-03	5.42e-03	0.01	172,172,197	0.0	0.0	0.0	0,0,0
2203	9.14e-03	5.33e-03	0.01	172,172,197	0.0	0.0	0.0	0,0,0
2204	9.12e-03	5.47e-03	0.01	172,172,197	0.0	0.0	0.0	0,0,0
2205	9.25e-03	5.40e-03	0.01	172,172,197	0.0	0.0	0.0	0,0,0
2206	9.28e-03	5.55e-03	0.01	172,172,197	0.0	0.0	0.0	0,0,0
2207	9.39e-03	5.51e-03	0.01	172,172,197	0.0	0.0	0.0	0,0,0
2208	9.62e-03	5.70e-03	0.01	172,172,197	0.0	0.0	0.0	0,0,0
2209	0.01	5.90e-03	0.01	172,172,197	0.0	0.0	0.0	0,0,0
2210	0.01	6.00e-03	0.01	172,172,197	0.0	0.0	0.0	0,0,0
2211	0.01	5.94e-03	0.01	172,172,197	0.0	0.0	0.0	0,0,0
2212	9.92e-03	5.98e-03	0.01	172,172,197	0.0	0.0	0.0	0,0,0
2213	0.01	6.13e-03	0.01	172,172,197	0.0	0.0	0.0	0,0,0
2214	0.01	6.20e-03	0.01	172,172,197	0.0	0.0	0.0	0,0,0
2215	0.01	8.95e-03	0.01	172,172,197	0.0	0.0	0.0	0,0,0
2216	0.01	8.07e-03	0.01	172,176,197	0.0	0.0	0.0	0,0,0
2217	0.01	0.01	0.02	172,172,197	0.0	0.0	0.0	0,0,0
2218	0.01	0.01	0.02	172,176,197	0.0	0.0	0.0	0,0,0
2499	0.02	0.01	0.02	172,161,197	0.0	0.0	0.0	0,0,0
2500	0.02	0.02	0.03	172,176,197	0.0	0.0	0.0	0,0,0
2501	0.02	0.01	0.03	172,176,197	0.0	0.0	0.0	0,0,0
2502	0.02	0.01	0.03	172,176,197	0.0	0.0	0.0	0,0,0
2503	0.02	0.02	0.03	172,176,197	0.0	0.0	0.0	0,0,0
2504	0.02	0.01	0.02	172,176,197	0.0	0.0	0.0	0,0,0
2505	0.02	0.01	0.03	172,172,197	0.0	0.0	0.0	0,0,0
2506	0.02	0.01	0.03	172,172,197	0.0	0.0	0.0	0,0,0
2507	0.02	0.01	0.03	172,172,197	0.0	0.0	0.0	0,0,0
2508	0.02	0.01	0.03	172,172,197	0.0	0.0	0.0	0,0,0
2509	0.02	0.01	0.03	172,172,197	0.0	0.0	0.0	0,0,0
2510	0.02	0.01	0.03	172,172,197	0.0	0.0	0.0	0,0,0
2511	0.02	0.01	0.03	172,172,197	0.0	0.0	0.0	0,0,0

2512	0.02	0.01	0.03	172,172,197	0.0	0.0	0.0	0,0,0
2513	0.02	0.01	0.03	172,172,197	0.0	0.0	0.0	0,0,0
2514	0.02	0.01	0.03	172,172,197	0.0	0.0	0.0	0,0,0
2515	0.02	0.01	0.03	172,172,197	0.0	0.0	0.0	0,0,0
2516	0.02	0.01	0.02	172,172,197	0.0	0.0	0.0	0,0,0
2517	0.02	0.01	0.02	172,172,197	0.0	0.0	0.0	0,0,0
2518	0.02	0.01	0.02	172,172,197	0.0	0.0	0.0	0,0,0
2519	0.02	0.01	0.02	172,172,197	0.0	0.0	0.0	0,0,0
2520	0.02	0.01	0.02	172,172,197	0.0	0.0	0.0	0,0,0
2521	0.02	0.02	0.02	172,172,197	0.0	0.0	0.0	0,0,0
2522	0.02	0.01	0.02	172,172,197	0.0	0.0	0.0	0,0,0
2523	0.02	0.01	0.02	172,172,197	0.0	0.0	0.0	0,0,0
2524	0.02	0.01	0.03	172,172,197	0.0	0.0	0.0	0,0,0
2525	0.02	0.01	0.03	172,172,197	0.0	0.0	0.0	0,0,0
2526	0.02	0.01	0.03	172,172,197	0.0	0.0	0.0	0,0,0
2527	0.02	0.01	0.03	172,172,197	0.0	0.0	0.0	0,0,0
2528	0.02	0.01	0.03	172,172,197	0.0	0.0	0.0	0,0,0
2529	0.02	0.01	0.03	172,172,197	0.0	0.0	0.0	0,0,0
2530	0.02	0.01	0.03	172,172,197	0.0	0.0	0.0	0,0,0
2531	0.02	0.01	0.03	172,172,197	0.0	0.0	0.0	0,0,0
2532	0.02	0.01	0.03	172,172,197	0.0	0.0	0.0	0,0,0
2533	0.02	0.01	0.03	172,172,197	0.0	0.0	0.0	0,0,0
2534	0.02	9.74e-03	0.02	172,172,197	0.0	0.0	0.0	0,0,0
2535	0.02	0.01	0.03	172,172,197	0.0	0.0	0.0	0,0,0
2536	0.02	0.01	0.03	172,172,197	0.0	0.0	0.0	0,0,0
2537	0.02	0.01	0.03	172,172,197	0.0	0.0	0.0	0,0,0
2538	0.02	0.01	0.02	172,172,197	0.0	0.0	0.0	0,0,0
2539	0.02	0.01	0.02	172,172,197	0.0	0.0	0.0	0,0,0
2540	0.02	9.67e-03	0.02	172,172,197	0.0	0.0	0.0	0,0,0
2541	0.02	0.01	0.02	172,172,197	0.0	0.0	0.0	0,0,0
2542	0.02	0.01	0.02	172,172,197	0.0	0.0	0.0	0,0,0
2543	0.02	0.01	0.02	172,172,197	0.0	0.0	0.0	0,0,0
2544	0.02	9.25e-03	0.02	172,172,197	0.0	0.0	0.0	0,0,0
2545	0.02	9.35e-03	0.02	172,172,197	0.0	0.0	0.0	0,0,0
2546	0.01	8.61e-03	0.02	172,172,197	0.0	0.0	0.0	0,0,0
2547	0.02	9.39e-03	0.02	172,172,197	0.0	0.0	0.0	0,0,0
2548	0.02	9.63e-03	0.02	172,172,197	0.0	0.0	0.0	0,0,0
2549	0.02	0.01	0.02	172,172,197	0.0	0.0	0.0	0,0,0
2550	0.01	7.11e-03	0.01	172,172,197	0.0	0.0	0.0	0,0,0
2551	0.02	9.15e-03	0.02	172,172,197	0.0	0.0	0.0	0,0,0
2552	0.02	9.04e-03	0.02	172,172,197	0.0	0.0	0.0	0,0,0
2553	0.02	9.82e-03	0.02	172,172,197	0.0	0.0	0.0	0,0,0
2554	0.02	0.01	0.02	172,172,197	0.0	0.0	0.0	0,0,0
2555	0.02	0.01	0.02	172,172,197	0.0	0.0	0.0	0,0,0
2556	0.02	9.35e-03	0.02	172,172,197	0.0	0.0	0.0	0,0,0
2557	0.02	9.99e-03	0.02	172,172,197	0.0	0.0	0.0	0,0,0
2558	0.02	9.81e-03	0.02	172,172,197	0.0	0.0	0.0	0,0,0
2559	0.02	0.01	0.02	172,172,197	0.0	0.0	0.0	0,0,0
2560	0.02	0.01	0.03	172,172,197	0.0	0.0	0.0	0,0,0
2561	0.02	0.01	0.03	172,172,197	0.0	0.0	0.0	0,0,0
2562	0.02	9.50e-03	0.02	172,172,197	0.0	0.0	0.0	0,0,0
2563	0.02	8.66e-03	0.02	176,176,199	0.0	0.0	0.0	0,0,0
2564	0.02	8.75e-03	0.02	176,176,199	0.0	0.0	0.0	0,0,0
2565	0.02	8.84e-03	0.02	176,176,199	0.0	0.0	0.0	0,0,0
2566	0.02	8.61e-03	0.02	176,176,199	0.0	0.0	0.0	0,0,0
2567	0.02	8.18e-03	0.02	176,176,199	0.0	0.0	0.0	0,0,0
2568	0.02	8.26e-03	0.02	176,176,199	0.0	0.0	0.0	0,0,0
2569	0.01	7.71e-03	0.02	176,176,199	0.0	0.0	0.0	0,0,0
2570	0.01	8.19e-03	0.02	176,176,199	0.0	0.0	0.0	0,0,0
2571	0.01	8.27e-03	0.02	176,176,199	0.0	0.0	0.0	0,0,0
2572	0.01	7.92e-03	0.02	176,176,199	0.0	0.0	0.0	0,0,0
2573	0.01	7.39e-03	0.02	176,176,199	0.0	0.0	0.0	0,0,0
2574	0.01	7.40e-03	0.02	176,176,199	0.0	0.0	0.0	0,0,0
2575	0.01	6.84e-03	0.01	176,176,199	0.0	0.0	0.0	0,0,0
2576	0.01	7.42e-03	0.02	176,176,199	0.0	0.0	0.0	0,0,0
2577	0.01	8.51e-03	0.02	176,176,199	0.0	0.0	0.0	0,0,0
2578	9.88e-03	6.15e-03	0.01	176,176,199	0.0	0.0	0.0	0,0,0
2579	0.01	7.10e-03	0.01	176,176,199	0.0	0.0	0.0	0,0,0
2580	0.01	7.29e-03	0.02	176,176,199	0.0	0.0	0.0	0,0,0
2581	0.01	7.21e-03	0.02	176,176,199	0.0	0.0	0.0	0,0,0
2582	0.01	7.72e-03	0.02	176,176,199	0.0	0.0	0.0	0,0,0
2583	0.01	8.05e-03	0.02	176,176,199	0.0	0.0	0.0	0,0,0
2584	0.01	7.95e-03	0.02	176,176,199	0.0	0.0	0.0	0,0,0
2585	0.01	7.41e-03	0.02	176,176,199	0.0	0.0	0.0	0,0,0
2586	0.01	8.00e-03	0.02	176,176,199	0.0	0.0	0.0	0,0,0
2587	0.01	7.93e-03	0.02	176,176,199	0.0	0.0	0.0	0,0,0
2588	0.02	8.36e-03	0.02	176,176,199	0.0	0.0	0.0	0,0,0
2589	0.02	8.61e-03	0.02	176,176,199	0.0	0.0	0.0	0,0,0
2590	0.02	8.50e-03	0.02	176,176,199	0.0	0.0	0.0	0,0,0

2591	0.02	8.46e-03	0.02	176,176,199	0.0	0.0	0.0	0,0,0
2592	0.02	7.74e-03	0.02	176,176,199	0.0	0.0	0.0	0,0,0
2593	0.01	7.12e-03	0.02	176,176,199	0.0	0.0	0.0	0,0,0
2594	0.01	7.01e-03	0.02	176,176,199	0.0	0.0	0.0	0,0,0
2595	0.01	6.81e-03	0.02	176,176,199	0.0	0.0	0.0	0,0,0
2596	0.01	6.54e-03	0.02	176,176,199	0.0	0.0	0.0	0,0,0
2597	0.01	6.57e-03	0.02	176,176,199	0.0	0.0	0.0	0,0,0
2598	0.01	6.11e-03	0.01	176,176,199	0.0	0.0	0.0	0,0,0
2599	0.01	6.34e-03	0.01	176,176,199	0.0	0.0	0.0	0,0,0
2600	0.01	6.35e-03	0.01	176,176,199	0.0	0.0	0.0	0,0,0
2601	0.01	6.14e-03	0.01	176,176,199	0.0	0.0	0.0	0,0,0
2602	0.01	5.86e-03	0.01	176,176,199	0.0	0.0	0.0	0,0,0
2603	9.94e-03	5.89e-03	0.01	176,176,199	0.0	0.0	0.0	0,0,0
2604	8.92e-03	5.50e-03	0.01	176,176,199	0.0	0.0	0.0	0,0,0
2605	0.01	6.37e-03	0.01	176,176,199	0.0	0.0	0.0	0,0,0
2606	8.06e-03	5.02e-03	0.01	176,176,199	0.0	0.0	0.0	0,0,0
2607	9.42e-03	5.86e-03	0.01	176,176,199	0.0	0.0	0.0	0,0,0
2608	9.95e-03	6.20e-03	0.01	176,176,199	0.0	0.0	0.0	0,0,0
2609	9.80e-03	5.87e-03	0.01	176,176,199	0.0	0.0	0.0	0,0,0
2610	9.53e-03	5.51e-03	0.01	176,176,199	0.0	0.0	0.0	0,0,0
2611	9.86e-03	5.74e-03	0.01	176,176,199	0.0	0.0	0.0	0,0,0
2612	0.01	5.94e-03	0.01	176,176,199	0.0	0.0	0.0	0,0,0
2613	0.01	5.92e-03	0.01	176,176,199	0.0	0.0	0.0	0,0,0
2614	9.85e-03	5.63e-03	0.01	176,176,199	0.0	0.0	0.0	0,0,0
2615	0.01	6.42e-03	0.01	176,176,199	0.0	0.0	0.0	0,0,0
2616	0.01	6.15e-03	0.01	176,176,199	0.0	0.0	0.0	0,0,0
2617	0.01	6.39e-03	0.02	176,176,199	0.0	0.0	0.0	0,0,0
2618	0.01	6.61e-03	0.02	176,176,199	0.0	0.0	0.0	0,0,0
2619	0.01	6.68e-03	0.02	176,176,199	0.0	0.0	0.0	0,0,0
2620	0.01	7.58e-03	0.02	176,176,199	0.0	0.0	0.0	0,0,0
2621	0.01	0.01	0.02	176,176,199	0.0	0.0	0.0	0,0,0
2622	0.01	5.80e-03	0.01	172,172,197	0.0	0.0	0.0	0,0,0
2623	0.01	5.61e-03	0.01	172,172,197	0.0	0.0	0.0	0,0,0
2624	9.85e-03	5.42e-03	0.01	172,172,197	0.0	0.0	0.0	0,0,0
2625	9.51e-03	5.25e-03	0.01	172,172,197	0.0	0.0	0.0	0,0,0
2626	9.43e-03	5.33e-03	0.01	172,172,197	0.0	0.0	0.0	0,0,0
2627	8.63e-03	4.93e-03	0.01	172,172,197	0.0	0.0	0.0	0,0,0
2628	8.61e-03	4.95e-03	0.01	172,172,197	0.0	0.0	0.0	0,0,0
2629	8.51e-03	4.93e-03	0.01	172,172,197	0.0	0.0	0.0	0,0,0
2630	8.29e-03	4.85e-03	0.01	172,176,197	0.0	0.0	0.0	0,0,0
2631	8.04e-03	4.74e-03	0.01	172,176,197	0.0	0.0	0.0	0,0,0
2632	8.07e-03	4.85e-03	0.01	172,172,197	0.0	0.0	0.0	0,0,0
2633	7.44e-03	4.63e-03	9.71e-03	176,176,199	0.0	0.0	0.0	0,0,0
2634	6.44e-03	4.01e-03	8.37e-03	172,172,197	0.0	0.0	0.0	0,0,0
2635	7.09e-03	6.64e-03	9.34e-03	176,172,197	0.0	0.0	0.0	0,0,0
2636	8.54e-03	5.31e-03	0.01	176,176,199	0.0	0.0	0.0	0,0,0
2637	7.82e-03	4.87e-03	0.01	176,176,199	0.0	0.0	0.0	0,0,0
2638	8.09e-03	4.88e-03	0.01	172,172,197	0.0	0.0	0.0	0,0,0
2639	7.41e-03	4.33e-03	9.66e-03	172,172,197	0.0	0.0	0.0	0,0,0
2640	7.53e-03	4.40e-03	9.79e-03	172,172,197	0.0	0.0	0.0	0,0,0
2641	7.71e-03	4.49e-03	0.01	172,172,197	0.0	0.0	0.0	0,0,0
2642	7.80e-03	4.50e-03	0.01	172,172,197	0.0	0.0	0.0	0,0,0
2643	7.72e-03	4.46e-03	0.01	172,172,197	0.0	0.0	0.0	0,0,0
2644	9.23e-03	5.29e-03	0.01	172,172,197	0.0	0.0	0.0	0,0,0
2645	8.80e-03	4.84e-03	0.01	172,172,197	0.0	0.0	0.0	0,0,0
2646	9.05e-03	5.00e-03	0.01	172,172,197	0.0	0.0	0.0	0,0,0
2647	9.47e-03	5.25e-03	0.01	172,172,197	0.0	0.0	0.0	0,0,0
2648	0.01	5.64e-03	0.01	172,172,197	0.0	0.0	0.0	0,0,0
2649	0.01	0.01	0.02	176,176,199	0.0	0.0	0.0	0,0,0
2650	9.88e-03	0.02	0.01	172,176,197	0.0	0.0	0.0	0,0,0
2651	0.01	0.01	0.01	172,172,197	0.0	0.0	0.0	0,0,0
2652	9.84e-03	0.02	0.01	172,176,197	0.0	0.0	0.0	0,0,0
2653	9.61e-03	0.01	0.01	172,176,197	0.0	0.0	0.0	0,0,0
2654	9.26e-03	0.01	0.01	172,176,197	0.0	0.0	0.0	0,0,0
2655	9.09e-03	7.46e-03	0.01	172,176,197	0.0	0.0	0.0	0,0,0
2656	8.93e-03	8.95e-03	0.01	172,176,197	0.0	0.0	0.0	0,0,0
2657	8.74e-03	5.22e-03	0.01	172,172,197	0.0	0.0	0.0	0,0,0
2658	8.76e-03	5.17e-03	0.01	172,172,197	0.0	0.0	0.0	0,0,0
2659	8.73e-03	5.17e-03	0.01	172,172,197	0.0	0.0	0.0	0,0,0
2660	8.38e-03	4.91e-03	0.01	172,172,197	0.0	0.0	0.0	0,0,0
2661	8.11e-03	4.85e-03	0.01	172,172,197	0.0	0.0	0.0	0,0,0
2662	7.98e-03	4.70e-03	0.01	172,172,197	0.0	0.0	0.0	0,0,0
2663	7.86e-03	4.71e-03	0.01	172,172,197	0.0	0.0	0.0	0,0,0
2664	7.89e-03	4.63e-03	0.01	172,172,197	0.0	0.0	0.0	0,0,0
2665	7.79e-03	4.67e-03	0.01	172,172,197	0.0	0.0	0.0	0,0,0
2666	7.87e-03	4.61e-03	0.01	172,172,197	0.0	0.0	0.0	0,0,0
2667	7.76e-03	4.65e-03	0.01	172,172,197	0.0	0.0	0.0	0,0,0
2668	7.85e-03	4.59e-03	0.01	172,172,197	0.0	0.0	0.0	0,0,0
2669	7.71e-03	4.62e-03	0.01	172,172,197	0.0	0.0	0.0	0,0,0

2670	7.92e-03	4.58e-03	0.01	172,172,197	0.0	0.0	0.0	0,0,0
2671	7.91e-03	4.68e-03	0.01	172,172,197	0.0	0.0	0.0	0,0,0
2672	7.79e-03	4.48e-03	0.01	172,172,197	0.0	0.0	0.0	0,0,0
2673	7.71e-03	4.50e-03	0.01	172,172,197	0.0	0.0	0.0	0,0,0
2674	7.53e-03	4.48e-03	9.98e-03	172,172,197	0.0	0.0	0.0	0,0,0
2675	7.82e-03	4.54e-03	0.01	172,172,197	0.0	0.0	0.0	0,0,0
2676	7.76e-03	4.52e-03	0.01	172,172,197	0.0	0.0	0.0	0,0,0
2677	7.75e-03	4.65e-03	0.01	172,172,197	0.0	0.0	0.0	0,0,0
2678	7.82e-03	4.69e-03	0.01	172,172,197	0.0	0.0	0.0	0,0,0
2679	7.85e-03	4.58e-03	0.01	172,172,197	0.0	0.0	0.0	0,0,0
2680	7.83e-03	4.66e-03	0.01	172,172,197	0.0	0.0	0.0	0,0,0
2681	7.85e-03	4.52e-03	0.01	172,172,197	0.0	0.0	0.0	0,0,0
2682	7.80e-03	4.64e-03	0.01	172,172,197	0.0	0.0	0.0	0,0,0
2683	8.00e-03	4.58e-03	0.01	172,172,197	0.0	0.0	0.0	0,0,0
2684	8.10e-03	4.79e-03	0.01	172,172,197	0.0	0.0	0.0	0,0,0
2685	8.07e-03	4.70e-03	0.01	172,172,197	0.0	0.0	0.0	0,0,0
2686	7.64e-03	4.62e-03	0.01	172,172,197	0.0	0.0	0.0	0,0,0
2687	7.92e-03	4.68e-03	0.01	172,172,197	0.0	0.0	0.0	0,0,0
2688	7.67e-03	4.64e-03	0.01	172,172,197	0.0	0.0	0.0	0,0,0
2689	7.94e-03	4.69e-03	0.01	172,172,197	0.0	0.0	0.0	0,0,0
2690	7.68e-03	4.65e-03	0.01	172,172,197	0.0	0.0	0.0	0,0,0
2691	7.93e-03	4.70e-03	0.01	172,172,197	0.0	0.0	0.0	0,0,0
2692	7.73e-03	4.68e-03	0.01	172,172,197	0.0	0.0	0.0	0,0,0
2693	7.99e-03	4.74e-03	0.01	172,172,197	0.0	0.0	0.0	0,0,0
2694	7.95e-03	4.79e-03	0.01	172,172,197	0.0	0.0	0.0	0,0,0
2695	8.43e-03	4.93e-03	0.01	172,172,197	0.0	0.0	0.0	0,0,0
2696	8.88e-03	5.24e-03	0.01	172,172,197	0.0	0.0	0.0	0,0,0
2697	8.86e-03	5.24e-03	0.01	172,172,197	0.0	0.0	0.0	0,0,0
2698	8.60e-03	5.17e-03	0.01	172,172,197	0.0	0.0	0.0	0,0,0
2699	8.94e-03	7.23e-03	0.01	172,176,197	0.0	0.0	0.0	0,0,0
2700	8.93e-03	6.05e-03	0.01	172,176,197	0.0	0.0	0.0	0,0,0
2701	9.30e-03	0.01	0.01	172,176,197	0.0	0.0	0.0	0,0,0
2702	9.47e-03	0.01	0.01	172,176,197	0.0	0.0	0.0	0,0,0
2703	9.87e-03	0.02	0.01	172,176,197	0.0	0.0	0.0	0,0,0
2704	0.01	0.01	0.01	172,172,197	0.0	0.0	0.0	0,0,0
2705	9.95e-03	0.02	0.01	172,176,197	0.0	0.0	0.0	0,0,0
2706	0.02	8.77e-03	0.02	172,172,197	0.0	0.0	0.0	0,0,0
2707	0.02	0.01	0.02	172,172,197	0.0	0.0	0.0	0,0,0
2708	0.02	0.01	0.02	172,172,197	0.0	0.0	0.0	0,0,0
2709	0.02	0.01	0.02	172,172,197	0.0	0.0	0.0	0,0,0
2710	0.02	0.01	0.02	172,172,197	0.0	0.0	0.0	0,0,0
2711	0.01	8.61e-03	0.02	172,172,197	0.0	0.0	0.0	0,0,0
2712	0.01	8.58e-03	0.02	172,172,197	0.0	0.0	0.0	0,0,0
2713	0.02	9.46e-03	0.02	172,172,197	0.0	0.0	0.0	0,0,0
2714	0.02	0.01	0.02	172,172,197	0.0	0.0	0.0	0,0,0
2715	0.02	0.01	0.02	172,172,197	0.0	0.0	0.0	0,0,0
2716	0.02	9.46e-03	0.02	172,172,197	0.0	0.0	0.0	0,0,0
2717	0.02	0.01	0.02	172,172,197	0.0	0.0	0.0	0,0,0
2718	0.02	9.47e-03	0.02	172,172,197	0.0	0.0	0.0	0,0,0
2719	0.02	0.01	0.02	172,172,197	0.0	0.0	0.0	0,0,0
2720	0.02	0.01	0.02	172,172,197	0.0	0.0	0.0	0,0,0
2721	0.02	0.01	0.02	172,172,197	0.0	0.0	0.0	0,0,0
2722	0.02	9.28e-03	0.02	172,172,197	0.0	0.0	0.0	0,0,0
2723	0.02	0.01	0.02	172,172,197	0.0	0.0	0.0	0,0,0
2724	0.01	8.93e-03	0.02	172,172,197	0.0	0.0	0.0	0,0,0
2725	0.02	9.77e-03	0.02	172,172,197	0.0	0.0	0.0	0,0,0
2726	0.02	0.01	0.02	172,172,197	0.0	0.0	0.0	0,0,0
2727	0.02	0.01	0.02	172,172,197	0.0	0.0	0.0	0,0,0
2728	0.02	0.04	0.02	176,176,199	0.0	0.0	0.0	0,0,0
2729	0.02	9.98e-03	0.02	172,172,197	0.0	0.0	0.0	0,0,0
2730	0.02	9.26e-03	0.02	172,172,197	0.0	0.0	0.0	0,0,0
2731	0.02	0.01	0.02	172,172,197	0.0	0.0	0.0	0,0,0
2732	0.02	0.01	0.02	172,172,197	0.0	0.0	0.0	0,0,0
2733	0.02	0.01	0.02	172,172,197	0.0	0.0	0.0	0,0,0
2734	0.02	9.35e-03	0.02	172,172,197	0.0	0.0	0.0	0,0,0
2735	0.02	0.01	0.02	172,172,197	0.0	0.0	0.0	0,0,0
2736	0.02	9.32e-03	0.02	172,172,197	0.0	0.0	0.0	0,0,0
2737	0.02	9.93e-03	0.02	172,172,197	0.0	0.0	0.0	0,0,0
2738	0.02	0.01	0.02	172,172,197	0.0	0.0	0.0	0,0,0
2739	0.02	9.32e-03	0.02	172,172,197	0.0	0.0	0.0	0,0,0
2740	0.01	8.42e-03	0.02	172,172,197	0.0	0.0	0.0	0,0,0
2741	0.01	7.86e-03	0.02	172,172,197	0.0	0.0	0.0	0,0,0
2742	0.02	8.70e-03	0.02	172,172,197	0.0	0.0	0.0	0,0,0
2743	0.02	9.24e-03	0.02	172,172,197	0.0	0.0	0.0	0,0,0
2744	0.02	9.11e-03	0.02	172,172,197	0.0	0.0	0.0	0,0,0
2745	0.01	8.52e-03	0.02	172,172,197	0.0	0.0	0.0	0,0,0
2746	0.02	9.12e-03	0.02	176,176,197	0.0	0.0	0.0	0,0,0
2747	0.01	8.48e-03	0.02	172,172,197	0.0	0.0	0.0	0,0,0
2748	0.02	9.22e-03	0.02	172,172,197	0.0	0.0	0.0	0,0,0

2749	0.02	9.48e-03	0.02	172,172,197	0.0	0.0	0.0	0,0,0
2750	0.02	9.10e-03	0.02	172,172,197	0.0	0.0	0.0	0,0,0
2751	0.01	8.33e-03	0.02	172,172,197	0.0	0.0	0.0	0,0,0
2752	0.01	8.79e-03	0.02	176,176,199	0.0	0.0	0.0	0,0,0
2753	0.01	8.03e-03	0.02	172,172,197	0.0	0.0	0.0	0,0,0
2754	0.01	8.83e-03	0.02	172,172,197	0.0	0.0	0.0	0,0,0
2755	0.01	9.32e-03	0.02	172,172,197	0.0	0.0	0.0	0,0,0
2756	0.02	0.02	0.02	172,176,197	0.0	0.0	0.0	0,0,0
2757	9.98e-03	0.11	0.01	176,172,197	0.0	0.0	0.0	0,0,0
2758	0.01	8.73e-03	0.02	176,176,199	0.0	0.0	0.0	0,0,0
2759	0.01	8.36e-03	0.02	172,172,197	0.0	0.0	0.0	0,0,0
2760	0.01	9.13e-03	0.02	172,172,197	0.0	0.0	0.0	0,0,0
2761	0.02	9.49e-03	0.02	172,172,197	0.0	0.0	0.0	0,0,0
2762	0.02	9.21e-03	0.02	172,172,197	0.0	0.0	0.0	0,0,0
2763	0.01	8.44e-03	0.02	172,172,197	0.0	0.0	0.0	0,0,0
2764	0.02	9.00e-03	0.02	176,176,199	0.0	0.0	0.0	0,0,0
2765	0.01	8.48e-03	0.02	172,172,197	0.0	0.0	0.0	0,0,0
2766	0.02	9.08e-03	0.02	172,172,197	0.0	0.0	0.0	0,0,0
2767	0.02	9.22e-03	0.02	172,172,197	0.0	0.0	0.0	0,0,0
2768	0.01	8.67e-03	0.02	172,172,197	0.0	0.0	0.0	0,0,0
2769	0.01	7.74e-03	0.02	172,172,197	0.0	0.0	0.0	0,0,0
2770	0.01	6.93e-03	0.02	176,176,199	0.0	0.0	0.0	0,0,0
2771	0.01	7.37e-03	0.02	176,176,199	0.0	0.0	0.0	0,0,0
2772	0.01	7.67e-03	0.02	176,176,199	0.0	0.0	0.0	0,0,0
2773	0.01	7.51e-03	0.02	176,176,199	0.0	0.0	0.0	0,0,0
2774	0.01	7.07e-03	0.02	176,176,199	0.0	0.0	0.0	0,0,0
2775	0.01	7.26e-03	0.02	176,176,199	0.0	0.0	0.0	0,0,0
2776	0.01	6.98e-03	0.02	176,176,199	0.0	0.0	0.0	0,0,0
2777	0.01	7.50e-03	0.02	176,176,199	0.0	0.0	0.0	0,0,0
2778	0.01	7.65e-03	0.02	176,176,199	0.0	0.0	0.0	0,0,0
2779	0.01	7.37e-03	0.02	176,176,199	0.0	0.0	0.0	0,0,0
2780	0.01	6.84e-03	0.01	176,176,199	0.0	0.0	0.0	0,0,0
2781	0.01	6.96e-03	0.01	176,176,199	0.0	0.0	0.0	0,0,0
2782	0.01	6.60e-03	0.01	176,176,199	0.0	0.0	0.0	0,0,0
2783	0.01	7.23e-03	0.01	176,176,199	0.0	0.0	0.0	0,0,0
2784	0.01	0.02	0.02	176,176,199	0.0	0.0	0.0	0,0,0
2785	8.82e-03	0.08	0.01	176,176,199	0.0	0.0	0.0	0,0,0
2786	0.02	0.04	0.02	176,176,199	0.0	0.0	0.0	0,0,0
2787	0.01	6.93e-03	0.01	176,176,199	0.0	0.0	0.0	0,0,0
2788	0.01	7.23e-03	0.02	176,176,199	0.0	0.0	0.0	0,0,0
2789	0.01	7.80e-03	0.02	176,176,199	0.0	0.0	0.0	0,0,0
2790	0.01	8.09e-03	0.02	176,176,199	0.0	0.0	0.0	0,0,0
2791	0.01	7.92e-03	0.02	176,176,199	0.0	0.0	0.0	0,0,0
2792	0.01	7.33e-03	0.02	176,176,199	0.0	0.0	0.0	0,0,0
2793	0.01	7.19e-03	0.02	176,176,199	0.0	0.0	0.0	0,0,0
2794	0.01	7.45e-03	0.02	176,176,199	0.0	0.0	0.0	0,0,0
2795	0.01	7.92e-03	0.02	176,176,199	0.0	0.0	0.0	0,0,0
2796	0.01	8.11e-03	0.02	176,176,199	0.0	0.0	0.0	0,0,0
2797	0.01	7.78e-03	0.02	176,176,199	0.0	0.0	0.0	0,0,0
2798	0.01	6.85e-03	0.02	176,176,199	0.0	0.0	0.0	0,0,0
2799	0.01	6.17e-03	0.01	176,176,199	0.0	0.0	0.0	0,0,0
2800	0.01	6.15e-03	0.01	176,176,199	0.0	0.0	0.0	0,0,0
2801	0.01	6.20e-03	0.01	176,176,199	0.0	0.0	0.0	0,0,0
2802	0.01	6.07e-03	0.01	176,176,199	0.0	0.0	0.0	0,0,0
2803	9.94e-03	5.82e-03	0.01	176,176,199	0.0	0.0	0.0	0,0,0
2804	9.80e-03	5.82e-03	0.01	176,176,199	0.0	0.0	0.0	0,0,0
2805	9.53e-03	5.69e-03	0.01	176,176,199	0.0	0.0	0.0	0,0,0
2806	9.92e-03	5.94e-03	0.01	176,176,199	0.0	0.0	0.0	0,0,0
2807	9.96e-03	6.00e-03	0.01	176,176,199	0.0	0.0	0.0	0,0,0
2808	9.66e-03	5.84e-03	0.01	176,176,199	0.0	0.0	0.0	0,0,0
2809	9.22e-03	5.58e-03	0.01	176,176,199	0.0	0.0	0.0	0,0,0
2810	9.07e-03	5.54e-03	0.01	176,176,199	0.0	0.0	0.0	0,0,0
2811	8.71e-03	5.42e-03	0.01	176,176,199	0.0	0.0	0.0	0,0,0
2812	0.01	0.01	0.01	176,176,199	0.0	0.0	0.0	0,0,0
2813	7.49e-03	0.06	9.59e-03	176,176,199	0.0	0.0	0.0	0,0,0
2814	0.01	0.03	0.02	176,176,199	0.0	0.0	0.0	0,0,0
2815	9.59e-03	5.97e-03	0.01	176,176,199	0.0	0.0	0.0	0,0,0
2816	8.88e-03	5.53e-03	0.01	176,176,199	0.0	0.0	0.0	0,0,0
2817	8.02e-03	4.86e-03	0.01	176,176,199	0.0	0.0	0.0	0,0,0
2818	8.45e-03	5.12e-03	0.01	176,176,199	0.0	0.0	0.0	0,0,0
2819	8.72e-03	5.27e-03	0.01	176,176,199	0.0	0.0	0.0	0,0,0
2820	8.63e-03	5.19e-03	0.01	176,176,199	0.0	0.0	0.0	0,0,0
2821	8.22e-03	4.93e-03	0.01	176,176,199	0.0	0.0	0.0	0,0,0
2822	9.64e-03	5.78e-03	0.01	176,176,199	0.0	0.0	0.0	0,0,0
2823	8.73e-03	5.11e-03	0.01	176,176,199	0.0	0.0	0.0	0,0,0
2824	9.17e-03	5.38e-03	0.01	176,176,199	0.0	0.0	0.0	0,0,0
2825	9.46e-03	5.53e-03	0.01	176,176,199	0.0	0.0	0.0	0,0,0
2826	9.45e-03	5.46e-03	0.01	176,176,199	0.0	0.0	0.0	0,0,0
2827	0.01	6.12e-03	0.01	176,176,199	0.0	0.0	0.0	0,0,0

2828	9.35e-03	8.98e-03	0.01	176,176,199	0.0	0.0	0.0	0,0,0
2829	9.02e-03	5.23e-03	0.01	172,172,197	0.0	0.0	0.0	0,0,0
2830	8.71e-03	5.09e-03	0.01	172,176,197	0.0	0.0	0.0	0,0,0
2831	8.39e-03	4.95e-03	0.01	172,176,197	0.0	0.0	0.0	0,0,0
2832	8.11e-03	4.81e-03	0.01	172,176,197	0.0	0.0	0.0	0,0,0
2833	8.15e-03	4.83e-03	0.01	176,176,199	0.0	0.0	0.0	0,0,0
2834	7.70e-03	4.67e-03	0.01	176,176,199	0.0	0.0	0.0	0,0,0
2835	7.78e-03	4.72e-03	0.01	176,176,199	0.0	0.0	0.0	0,0,0
2836	7.77e-03	4.73e-03	0.01	176,176,199	0.0	0.0	0.0	0,0,0
2837	7.65e-03	4.67e-03	9.95e-03	176,176,199	0.0	0.0	0.0	0,0,0
2838	7.49e-03	4.57e-03	9.69e-03	176,176,199	0.0	0.0	0.0	0,0,0
2839	7.32e-03	4.56e-03	9.53e-03	176,176,199	0.0	0.0	0.0	0,0,0
2840	7.27e-03	4.52e-03	9.48e-03	176,176,199	0.0	0.0	0.0	0,0,0
2841	6.15e-03	0.06	8.02e-03	172,172,197	0.0	0.0	0.0	0,0,0
2842	0.01	0.02	0.01	176,176,199	0.0	0.0	0.0	0,0,0
2843	8.13e-03	5.06e-03	0.01	176,176,199	0.0	0.0	0.0	0,0,0
2844	7.54e-03	4.70e-03	9.82e-03	176,176,199	0.0	0.0	0.0	0,0,0
2845	7.39e-03	4.60e-03	9.61e-03	176,176,199	0.0	0.0	0.0	0,0,0
2846	6.87e-03	4.15e-03	8.93e-03	176,176,199	0.0	0.0	0.0	0,0,0
2847	6.92e-03	4.20e-03	9.00e-03	176,176,199	0.0	0.0	0.0	0,0,0
2848	7.04e-03	4.25e-03	9.14e-03	176,176,199	0.0	0.0	0.0	0,0,0
2849	7.06e-03	4.25e-03	9.17e-03	176,176,199	0.0	0.0	0.0	0,0,0
2850	6.94e-03	4.19e-03	9.03e-03	176,176,199	0.0	0.0	0.0	0,0,0
2851	8.09e-03	4.83e-03	0.01	176,176,199	0.0	0.0	0.0	0,0,0
2852	7.44e-03	4.37e-03	9.67e-03	176,176,199	0.0	0.0	0.0	0,0,0
2853	7.61e-03	4.48e-03	9.87e-03	176,176,199	0.0	0.0	0.0	0,0,0
2854	7.78e-03	4.56e-03	0.01	176,176,199	0.0	0.0	0.0	0,0,0
2855	8.04e-03	4.70e-03	0.01	176,176,199	0.0	0.0	0.0	0,0,0
2856	9.24e-03	9.92e-03	0.01	176,176,199	0.0	0.0	0.0	0,0,0
2857	8.74e-03	0.02	0.01	172,176,197	0.0	0.0	0.0	0,0,0
2858	9.19e-03	0.01	0.01	172,172,197	0.0	0.0	0.0	0,0,0
2859	8.65e-03	0.01	0.01	172,176,197	0.0	0.0	0.0	0,0,0
2860	8.92e-03	0.01	0.01	172,172,197	0.0	0.0	0.0	0,0,0
2861	8.24e-03	7.02e-03	0.01	172,176,197	0.0	0.0	0.0	0,0,0
2862	8.44e-03	5.29e-03	0.01	172,172,197	0.0	0.0	0.0	0,0,0
2863	7.94e-03	4.75e-03	0.01	172,172,197	0.0	0.0	0.0	0,0,0
2864	8.08e-03	4.81e-03	0.01	172,172,197	0.0	0.0	0.0	0,0,0
2865	7.79e-03	4.65e-03	0.01	172,172,197	0.0	0.0	0.0	0,0,0
2866	7.92e-03	4.69e-03	0.01	172,172,197	0.0	0.0	0.0	0,0,0
2867	7.38e-03	4.39e-03	9.71e-03	172,172,197	0.0	0.0	0.0	0,0,0
2868	7.36e-03	4.37e-03	9.70e-03	172,172,197	0.0	0.0	0.0	0,0,0
2869	7.15e-03	4.25e-03	9.41e-03	172,172,197	0.0	0.0	0.0	0,0,0
2870	7.18e-03	4.25e-03	9.45e-03	172,172,197	0.0	0.0	0.0	0,0,0
2871	7.03e-03	4.18e-03	9.24e-03	172,172,197	0.0	0.0	0.0	0,0,0
2872	7.06e-03	4.18e-03	9.28e-03	172,172,197	0.0	0.0	0.0	0,0,0
2873	6.93e-03	4.13e-03	9.12e-03	172,172,197	0.0	0.0	0.0	0,0,0
2874	6.93e-03	4.13e-03	9.12e-03	172,172,197	0.0	0.0	0.0	0,0,0
2875	6.85e-03	4.08e-03	9.01e-03	172,172,197	0.0	0.0	0.0	0,0,0
2876	6.80e-03	4.07e-03	8.94e-03	172,172,197	0.0	0.0	0.0	0,0,0
2877	6.85e-03	4.07e-03	9.00e-03	172,172,197	0.0	0.0	0.0	0,0,0
2878	6.77e-03	4.04e-03	8.90e-03	172,172,197	0.0	0.0	0.0	0,0,0
2879	6.70e-03	3.97e-03	8.82e-03	172,172,197	0.0	0.0	0.0	0,0,0
2880	6.60e-03	3.92e-03	8.69e-03	172,172,197	0.0	0.0	0.0	0,0,0
2881	7.11e-03	4.18e-03	9.34e-03	172,172,197	0.0	0.0	0.0	0,0,0
2882	8.86e-03	5.05e-03	0.01	176,176,199	0.0	0.0	0.0	0,0,0
2883	8.81e-03	5.03e-03	0.01	176,176,199	0.0	0.0	0.0	0,0,0
2884	7.49e-03	4.38e-03	9.83e-03	172,172,197	0.0	0.0	0.0	0,0,0
2885	7.11e-03	4.17e-03	9.34e-03	172,172,197	0.0	0.0	0.0	0,0,0
2886	7.10e-03	4.17e-03	9.32e-03	172,172,197	0.0	0.0	0.0	0,0,0
2887	6.82e-03	4.03e-03	8.96e-03	172,172,197	0.0	0.0	0.0	0,0,0
2888	6.86e-03	4.06e-03	9.02e-03	172,172,197	0.0	0.0	0.0	0,0,0
2889	6.74e-03	4.01e-03	8.87e-03	172,172,197	0.0	0.0	0.0	0,0,0
2890	6.85e-03	4.06e-03	9.00e-03	172,172,197	0.0	0.0	0.0	0,0,0
2891	6.96e-03	4.16e-03	9.14e-03	172,172,197	0.0	0.0	0.0	0,0,0
2892	7.03e-03	4.20e-03	9.23e-03	172,172,197	0.0	0.0	0.0	0,0,0
2893	6.90e-03	4.14e-03	9.07e-03	172,172,197	0.0	0.0	0.0	0,0,0
2894	6.98e-03	4.20e-03	9.17e-03	172,172,197	0.0	0.0	0.0	0,0,0
2895	7.00e-03	4.18e-03	9.20e-03	172,172,197	0.0	0.0	0.0	0,0,0
2896	7.06e-03	4.24e-03	9.27e-03	172,172,197	0.0	0.0	0.0	0,0,0
2897	7.10e-03	4.23e-03	9.33e-03	172,172,197	0.0	0.0	0.0	0,0,0
2898	7.13e-03	4.28e-03	9.36e-03	172,172,197	0.0	0.0	0.0	0,0,0
2899	7.20e-03	4.28e-03	9.46e-03	172,172,197	0.0	0.0	0.0	0,0,0
2900	7.20e-03	4.32e-03	9.46e-03	172,172,197	0.0	0.0	0.0	0,0,0
2901	7.28e-03	4.34e-03	9.58e-03	172,172,197	0.0	0.0	0.0	0,0,0
2902	7.35e-03	4.41e-03	9.67e-03	172,172,197	0.0	0.0	0.0	0,0,0
2903	7.96e-03	4.73e-03	0.01	172,172,197	0.0	0.0	0.0	0,0,0
2904	7.89e-03	4.72e-03	0.01	172,172,197	0.0	0.0	0.0	0,0,0
2905	8.04e-03	4.78e-03	0.01	172,172,197	0.0	0.0	0.0	0,0,0
2906	7.96e-03	4.79e-03	0.01	172,172,197	0.0	0.0	0.0	0,0,0

2907	8.44e-03	5.00e-03	0.01	172,172,197	0.0	0.0	0.0	0,0,0
2908	8.30e-03	5.09e-03	0.01	172,176,197	0.0	0.0	0.0	0,0,0
2909	8.90e-03	8.24e-03	0.01	172,172,197	0.0	0.0	0.0	0,0,0
2910	8.71e-03	0.01	0.01	172,176,197	0.0	0.0	0.0	0,0,0
2911	9.04e-03	0.01	0.01	172,172,197	0.0	0.0	0.0	0,0,0
2912	8.58e-03	0.02	0.01	172,176,197	0.0	0.0	0.0	0,0,0
2913	0.02	0.01	0.02	176,176,199	0.0	0.0	0.0	0,0,0
2914	0.02	0.01	0.03	176,176,199	0.0	0.0	0.0	0,0,0
2915	0.02	0.01	0.02	176,176,199	0.0	0.0	0.0	0,0,0
2916	0.02	0.01	0.02	176,176,199	0.0	0.0	0.0	0,0,0
2917	0.02	0.01	0.03	176,176,199	0.0	0.0	0.0	0,0,0
2918	0.02	9.85e-03	0.02	176,176,199	0.0	0.0	0.0	0,0,0
2919	0.02	0.01	0.03	176,176,199	0.0	0.0	0.0	0,0,0
2920	0.02	0.01	0.03	176,176,199	0.0	0.0	0.0	0,0,0
2921	0.02	0.01	0.03	176,176,199	0.0	0.0	0.0	0,0,0
2922	0.02	0.01	0.03	176,176,199	0.0	0.0	0.0	0,0,0
2923	0.02	0.01	0.03	176,176,199	0.0	0.0	0.0	0,0,0
2924	0.02	0.01	0.03	176,176,199	0.0	0.0	0.0	0,0,0
2925	0.02	0.01	0.03	172,176,197	0.0	0.0	0.0	0,0,0
2926	0.02	0.01	0.03	176,176,199	0.0	0.0	0.0	0,0,0
2927	0.02	0.01	0.03	176,176,199	0.0	0.0	0.0	0,0,0
2928	0.02	0.01	0.03	176,176,199	0.0	0.0	0.0	0,0,0
2929	0.02	0.01	0.02	176,176,199	0.0	0.0	0.0	0,0,0
2930	0.02	0.01	0.02	176,176,199	0.0	0.0	0.0	0,0,0
2931	0.02	9.76e-03	0.02	172,176,197	0.0	0.0	0.0	0,0,0
2932	0.02	0.01	0.02	176,176,199	0.0	0.0	0.0	0,0,0
2933	0.02	0.01	0.02	176,176,199	0.0	0.0	0.0	0,0,0
2934	0.02	0.01	0.02	176,176,199	0.0	0.0	0.0	0,0,0
2935	0.03	0.02	0.03	176,176,199	0.0	0.0	0.0	0,0,0
2936	0.02	0.01	0.02	176,176,199	0.0	0.0	0.0	0,0,0
2937	0.02	0.01	0.02	176,176,199	0.0	0.0	0.0	0,0,0
2938	0.02	0.01	0.02	176,176,199	0.0	0.0	0.0	0,0,0
2939	0.02	0.01	0.02	176,176,199	0.0	0.0	0.0	0,0,0
2940	0.02	0.01	0.03	176,176,199	0.0	0.0	0.0	0,0,0
2941	0.02	0.01	0.02	172,176,197	0.0	0.0	0.0	0,0,0
2942	0.02	0.01	0.03	176,176,199	0.0	0.0	0.0	0,0,0
2943	0.02	0.01	0.03	176,176,199	0.0	0.0	0.0	0,0,0
2944	0.02	0.01	0.03	176,176,199	0.0	0.0	0.0	0,0,0
2945	0.02	0.01	0.03	176,176,199	0.0	0.0	0.0	0,0,0
2946	0.02	0.01	0.03	176,176,199	0.0	0.0	0.0	0,0,0
2947	0.02	9.95e-03	0.02	176,176,199	0.0	0.0	0.0	0,0,0
2948	0.02	9.02e-03	0.02	172,176,197	0.0	0.0	0.0	0,0,0
2949	0.02	9.98e-03	0.03	172,176,199	0.0	0.0	0.0	0,0,0
2950	0.02	0.01	0.02	176,176,199	0.0	0.0	0.0	0,0,0
2951	0.02	9.94e-03	0.02	176,176,199	0.0	0.0	0.0	0,0,0
2952	0.02	9.31e-03	0.02	176,176,199	0.0	0.0	0.0	0,0,0
2953	0.02	9.92e-03	0.02	176,176,199	0.0	0.0	0.0	0,0,0
2954	0.02	8.83e-03	0.02	172,176,197	0.0	0.0	0.0	0,0,0
2955	0.02	9.59e-03	0.02	176,176,199	0.0	0.0	0.0	0,0,0
2956	0.02	9.71e-03	0.02	176,176,199	0.0	0.0	0.0	0,0,0
2957	0.02	9.18e-03	0.02	176,176,199	0.0	0.0	0.0	0,0,0
2958	0.01	8.40e-03	0.02	176,176,199	0.0	0.0	0.0	0,0,0
2959	0.02	8.89e-03	0.02	176,176,199	0.0	0.0	0.0	0,0,0
2960	0.01	7.76e-03	0.02	172,176,197	0.0	0.0	0.0	0,0,0
2961	0.01	8.56e-03	0.02	176,176,199	0.0	0.0	0.0	0,0,0
2962	0.01	8.73e-03	0.02	176,176,199	0.0	0.0	0.0	0,0,0
2963	0.02	0.01	0.03	176,176,199	0.0	0.0	0.0	0,0,0
2964	0.01	8.85e-03	0.02	176,176,199	0.0	0.0	0.0	0,0,0
2965	0.01	8.22e-03	0.02	176,176,199	0.0	0.0	0.0	0,0,0
2966	0.02	9.00e-03	0.02	176,176,199	0.0	0.0	0.0	0,0,0
2967	0.02	9.52e-03	0.02	176,176,199	0.0	0.0	0.0	0,0,0
2968	0.02	9.37e-03	0.02	176,176,199	0.0	0.0	0.0	0,0,0
2969	0.02	8.58e-03	0.02	172,176,197	0.0	0.0	0.0	0,0,0
2970	0.02	9.57e-03	0.02	176,176,199	0.0	0.0	0.0	0,0,0
2971	0.02	9.04e-03	0.02	176,176,199	0.0	0.0	0.0	0,0,0
2972	0.02	9.68e-03	0.02	176,176,199	0.0	0.0	0.0	0,0,0
2973	0.02	0.01	0.02	176,176,199	0.0	0.0	0.0	0,0,0
2974	0.02	9.75e-03	0.02	176,176,199	0.0	0.0	0.0	0,0,0
2975	0.02	8.78e-03	0.02	172,176,197	0.0	0.0	0.0	0,0,0
2976	0.02	7.82e-03	0.02	176,176,199	0.0	0.0	0.0	0,0,0
2977	0.02	8.56e-03	0.02	176,176,199	0.0	0.0	0.0	0,0,0
2978	0.02	8.66e-03	0.02	176,176,199	0.0	0.0	0.0	0,0,0
2979	0.02	8.38e-03	0.02	176,176,199	0.0	0.0	0.0	0,0,0
2980	0.01	7.91e-03	0.02	176,176,199	0.0	0.0	0.0	0,0,0
2981	0.01	7.86e-03	0.02	176,176,199	0.0	0.0	0.0	0,0,0
2982	0.01	7.45e-03	0.02	176,176,199	0.0	0.0	0.0	0,0,0
2983	0.01	7.96e-03	0.02	176,176,199	0.0	0.0	0.0	0,0,0
2984	0.01	8.02e-03	0.02	176,176,199	0.0	0.0	0.0	0,0,0
2985	0.01	7.65e-03	0.02	176,176,199	0.0	0.0	0.0	0,0,0

2986	0.01	7.10e-03	0.02	176,176,199	0.0	0.0	0.0	0,0,0
2987	0.01	6.99e-03	0.02	176,176,199	0.0	0.0	0.0	0,0,0
2988	0.01	6.57e-03	0.01	176,176,199	0.0	0.0	0.0	0,0,0
2989	0.01	7.17e-03	0.02	176,176,199	0.0	0.0	0.0	0,0,0
2990	0.02	0.01	0.02	176,176,199	0.0	0.0	0.0	0,0,0
2991	0.02	0.01	0.03	176,176,199	0.0	0.0	0.0	0,0,0
2992	0.01	7.01e-03	0.02	176,176,199	0.0	0.0	0.0	0,0,0
2993	0.01	7.48e-03	0.02	176,176,199	0.0	0.0	0.0	0,0,0
2994	0.01	8.04e-03	0.02	176,176,199	0.0	0.0	0.0	0,0,0
2995	0.01	8.39e-03	0.02	176,176,199	0.0	0.0	0.0	0,0,0
2996	0.01	8.31e-03	0.02	176,176,199	0.0	0.0	0.0	0,0,0
2997	0.01	7.75e-03	0.02	176,176,199	0.0	0.0	0.0	0,0,0
2998	0.01	7.63e-03	0.02	176,176,199	0.0	0.0	0.0	0,0,0
2999	0.01	8.19e-03	0.02	176,176,199	0.0	0.0	0.0	0,0,0
3000	0.02	8.66e-03	0.02	176,176,199	0.0	0.0	0.0	0,0,0
3001	0.02	8.93e-03	0.02	176,176,199	0.0	0.0	0.0	0,0,0
3002	0.02	8.81e-03	0.02	176,176,199	0.0	0.0	0.0	0,0,0
3003	0.02	7.64e-03	0.02	176,176,199	0.0	0.0	0.0	0,0,0
3004	0.01	6.89e-03	0.02	176,176,199	0.0	0.0	0.0	0,0,0
3005	0.01	7.11e-03	0.02	176,176,199	0.0	0.0	0.0	0,0,0
3006	0.01	7.00e-03	0.02	176,176,199	0.0	0.0	0.0	0,0,0
3007	0.01	6.79e-03	0.02	176,176,199	0.0	0.0	0.0	0,0,0
3008	0.01	6.54e-03	0.02	176,176,199	0.0	0.0	0.0	0,0,0
3009	0.01	6.35e-03	0.02	176,176,199	0.0	0.0	0.0	0,0,0
3010	0.01	6.11e-03	0.01	176,176,199	0.0	0.0	0.0	0,0,0
3011	0.01	6.31e-03	0.01	176,176,199	0.0	0.0	0.0	0,0,0
3012	0.01	6.30e-03	0.01	176,176,199	0.0	0.0	0.0	0,0,0
3013	0.01	6.09e-03	0.01	176,176,199	0.0	0.0	0.0	0,0,0
3014	0.01	5.84e-03	0.01	176,176,199	0.0	0.0	0.0	0,0,0
3015	9.57e-03	5.65e-03	0.01	176,176,199	0.0	0.0	0.0	0,0,0
3016	8.90e-03	5.43e-03	0.01	176,176,199	0.0	0.0	0.0	0,0,0
3017	0.01	7.95e-03	0.02	172,172,197	0.0	0.0	0.0	0,0,0
3018	0.02	0.01	0.03	176,176,199	0.0	0.0	0.0	0,0,0
3019	9.69e-03	6.03e-03	0.01	176,176,199	0.0	0.0	0.0	0,0,0
3020	9.49e-03	5.66e-03	0.01	176,176,199	0.0	0.0	0.0	0,0,0
3021	8.12e-03	0.03	0.01	176,176,199	0.0	0.0	0.0	0,0,0
3022	8.33e-03	0.03	0.01	172,176,197	0.0	0.0	0.0	0,0,0
3023	8.80e-03	0.03	0.01	172,176,197	0.0	0.0	0.0	0,0,0
3024	8.92e-03	0.03	0.01	172,176,197	0.0	0.0	0.0	0,0,0
3025	8.36e-03	0.03	0.01	172,176,197	0.0	0.0	0.0	0,0,0
3026	0.01	6.17e-03	0.01	176,176,199	0.0	0.0	0.0	0,0,0
3027	0.01	0.03	0.01	176,176,199	0.0	0.0	0.0	0,0,0
3028	0.01	0.03	0.01	172,176,197	0.0	0.0	0.0	0,0,0
3029	0.01	0.04	0.01	172,176,197	0.0	0.0	0.0	0,0,0
3030	0.01	0.03	0.02	172,176,197	0.0	0.0	0.0	0,0,0
3031	0.01	6.64e-03	0.02	176,176,199	0.0	0.0	0.0	0,0,0
3032	0.01	0.01	0.01	176,176,199	0.0	0.0	0.0	0,0,0
3033	0.01	5.91e-03	0.01	172,172,197	0.0	0.0	0.0	0,0,0
3034	0.01	5.70e-03	0.01	172,172,197	0.0	0.0	0.0	0,0,0
3035	0.01	5.50e-03	0.01	172,172,197	0.0	0.0	0.0	0,0,0
3036	9.77e-03	5.37e-03	0.01	176,172,199	0.0	0.0	0.0	0,0,0
3037	9.35e-03	5.24e-03	0.01	172,172,197	0.0	0.0	0.0	0,0,0
3038	8.84e-03	5.03e-03	0.01	172,172,197	0.0	0.0	0.0	0,0,0
3039	8.80e-03	5.03e-03	0.01	172,172,197	0.0	0.0	0.0	0,0,0
3040	8.61e-03	4.97e-03	0.01	176,172,199	0.0	0.0	0.0	0,0,0
3041	8.34e-03	4.87e-03	0.01	176,172,197	0.0	0.0	0.0	0,0,0
3042	8.19e-03	4.80e-03	0.01	176,176,199	0.0	0.0	0.0	0,0,0
3043	7.86e-03	4.71e-03	0.01	172,172,197	0.0	0.0	0.0	0,0,0
3044	7.54e-03	4.60e-03	9.85e-03	172,172,197	0.0	0.0	0.0	0,0,0
3045	0.02	9.34e-03	0.02	176,176,199	0.0	0.0	0.0	0,0,0
3046	8.19e-03	5.00e-03	0.01	172,172,197	0.0	0.0	0.0	0,0,0
3047	7.46e-03	4.64e-03	9.71e-03	176,176,199	0.0	0.0	0.0	0,0,0
3048	8.03e-03	4.79e-03	0.01	172,172,197	0.0	0.0	0.0	0,0,0
3049	8.93e-03	5.23e-03	0.01	176,176,199	0.0	0.0	0.0	0,0,0
3050	8.85e-03	5.22e-03	0.01	176,176,199	0.0	0.0	0.0	0,0,0
3051	9.05e-03	5.30e-03	0.01	176,176,199	0.0	0.0	0.0	0,0,0
3052	9.19e-03	5.34e-03	0.01	176,176,199	0.0	0.0	0.0	0,0,0
3053	8.99e-03	5.25e-03	0.01	176,176,199	0.0	0.0	0.0	0,0,0
3054	9.10e-03	5.17e-03	0.01	172,172,197	0.0	0.0	0.0	0,0,0
3055	0.01	5.68e-03	0.01	176,176,199	0.0	0.0	0.0	0,0,0
3056	0.01	5.79e-03	0.01	176,176,199	0.0	0.0	0.0	0,0,0
3057	0.01	5.91e-03	0.01	176,176,199	0.0	0.0	0.0	0,0,0
3058	0.01	6.06e-03	0.01	176,176,199	0.0	0.0	0.0	0,0,0
3059	0.01	0.01	0.01	176,176,199	0.0	0.0	0.0	0,0,0
3060	8.02e-03	0.01	0.01	172,176,197	0.0	0.0	0.0	0,0,0
3061	8.83e-03	0.01	0.01	172,172,197	0.0	0.0	0.0	0,0,0
3062	8.37e-03	9.43e-03	0.01	172,176,197	0.0	0.0	0.0	0,0,0
3063	8.65e-03	8.37e-03	0.01	172,172,197	0.0	0.0	0.0	0,0,0
3064	8.02e-03	4.80e-03	0.01	172,172,197	0.0	0.0	0.0	0,0,0

3065	8.19e-03	4.72e-03	0.01	172,172,197	0.0	0.0	0.0	0,0,0
3066	7.80e-03	4.67e-03	0.01	172,172,197	0.0	0.0	0.0	0,0,0
3067	7.83e-03	4.54e-03	0.01	172,172,197	0.0	0.0	0.0	0,0,0
3068	7.93e-03	4.69e-03	0.01	172,172,197	0.0	0.0	0.0	0,0,0
3069	7.63e-03	4.41e-03	0.01	172,172,197	0.0	0.0	0.0	0,0,0
3070	7.45e-03	4.39e-03	9.82e-03	172,172,197	0.0	0.0	0.0	0,0,0
3071	7.06e-03	4.09e-03	9.30e-03	172,172,197	0.0	0.0	0.0	0,0,0
3072	7.13e-03	4.24e-03	9.39e-03	172,172,197	0.0	0.0	0.0	0,0,0
3073	6.89e-03	3.97e-03	9.06e-03	172,172,197	0.0	0.0	0.0	0,0,0
3074	6.94e-03	4.14e-03	9.14e-03	172,172,197	0.0	0.0	0.0	0,0,0
3075	6.72e-03	3.88e-03	8.83e-03	172,172,197	0.0	0.0	0.0	0,0,0
3076	6.79e-03	4.06e-03	8.95e-03	172,172,197	0.0	0.0	0.0	0,0,0
3077	6.55e-03	3.80e-03	8.61e-03	172,172,197	0.0	0.0	0.0	0,0,0
3078	6.76e-03	4.03e-03	8.90e-03	172,172,197	0.0	0.0	0.0	0,0,0
3079	6.41e-03	3.75e-03	8.43e-03	172,172,197	0.0	0.0	0.0	0,0,0
3080	6.98e-03	4.10e-03	9.16e-03	172,172,197	0.0	0.0	0.0	0,0,0
3081	6.58e-03	3.80e-03	8.65e-03	172,172,197	0.0	0.0	0.0	0,0,0
3082	6.71e-03	3.92e-03	8.84e-03	172,172,197	0.0	0.0	0.0	0,0,0
3083	6.59e-03	3.85e-03	8.65e-03	172,172,197	0.0	0.0	0.0	0,0,0
3084	6.98e-03	4.07e-03	9.20e-03	172,172,197	0.0	0.0	0.0	0,0,0
3085	0.01	5.67e-03	0.01	176,176,199	0.0	0.0	0.0	0,0,0
3086	0.01	5.65e-03	0.01	176,176,199	0.0	0.0	0.0	0,0,0
3087	7.10e-03	4.15e-03	9.35e-03	172,172,197	0.0	0.0	0.0	0,0,0
3088	7.10e-03	3.98e-03	9.29e-03	172,172,197	0.0	0.0	0.0	0,0,0
3089	6.78e-03	4.01e-03	8.92e-03	172,172,197	0.0	0.0	0.0	0,0,0
3090	6.47e-03	3.76e-03	8.50e-03	172,172,197	0.0	0.0	0.0	0,0,0
3091	6.58e-03	3.92e-03	8.66e-03	172,172,197	0.0	0.0	0.0	0,0,0
3092	6.59e-03	3.82e-03	8.66e-03	172,172,197	0.0	0.0	0.0	0,0,0
3093	6.90e-03	4.05e-03	9.08e-03	172,172,197	0.0	0.0	0.0	0,0,0
3094	6.63e-03	3.84e-03	8.69e-03	172,172,197	0.0	0.0	0.0	0,0,0
3095	7.17e-03	4.26e-03	9.39e-03	172,172,197	0.0	0.0	0.0	0,0,0
3096	6.58e-03	3.90e-03	8.64e-03	172,172,197	0.0	0.0	0.0	0,0,0
3097	6.77e-03	4.13e-03	8.90e-03	172,172,197	0.0	0.0	0.0	0,0,0
3098	6.68e-03	3.94e-03	8.78e-03	172,172,197	0.0	0.0	0.0	0,0,0
3099	6.67e-03	4.07e-03	8.77e-03	172,172,197	0.0	0.0	0.0	0,0,0
3100	6.81e-03	3.99e-03	8.93e-03	172,172,197	0.0	0.0	0.0	0,0,0
3101	6.73e-03	4.11e-03	8.85e-03	172,172,197	0.0	0.0	0.0	0,0,0
3102	6.91e-03	4.05e-03	9.07e-03	172,172,197	0.0	0.0	0.0	0,0,0
3103	6.99e-03	4.26e-03	9.19e-03	172,172,197	0.0	0.0	0.0	0,0,0
3104	6.98e-03	4.11e-03	9.19e-03	172,172,197	0.0	0.0	0.0	0,0,0
3105	7.32e-03	4.38e-03	9.63e-03	172,172,197	0.0	0.0	0.0	0,0,0
3106	7.66e-03	4.45e-03	0.01	172,172,197	0.0	0.0	0.0	0,0,0
3107	7.97e-03	4.75e-03	0.01	172,172,197	0.0	0.0	0.0	0,0,0
3108	7.80e-03	4.58e-03	0.01	172,172,197	0.0	0.0	0.0	0,0,0
3109	7.57e-03	4.56e-03	9.92e-03	172,172,197	0.0	0.0	0.0	0,0,0
3110	8.21e-03	4.81e-03	0.01	172,172,197	0.0	0.0	0.0	0,0,0
3111	7.92e-03	4.75e-03	0.01	172,172,197	0.0	0.0	0.0	0,0,0
3112	8.68e-03	9.07e-03	0.01	172,172,197	0.0	0.0	0.0	0,0,0
3113	8.32e-03	8.98e-03	0.01	172,176,197	0.0	0.0	0.0	0,0,0
3114	8.82e-03	0.01	0.01	172,172,197	0.0	0.0	0.0	0,0,0
3115	8.03e-03	0.01	0.01	172,176,197	0.0	0.0	0.0	0,0,0
3396	0.02	0.02	0.02	176,157,199	0.0	0.0	0.0	0,0,0
3397	0.02	0.02	0.02	176,157,199	0.0	0.0	0.0	0,0,0
3398	0.02	0.01	0.02	176,157,199	0.0	0.0	0.0	0,0,0
3399	0.02	0.01	0.02	176,172,199	0.0	0.0	0.0	0,0,0
3400	0.02	0.01	0.02	176,157,199	0.0	0.0	0.0	0,0,0
3401	0.01	0.01	0.02	176,157,199	0.0	0.0	0.0	0,0,0
3402	0.02	9.07e-03	0.02	176,176,199	0.0	0.0	0.0	0,0,0
3403	0.02	9.97e-03	0.03	172,176,197	0.0	0.0	0.0	0,0,0
3404	0.02	0.01	0.03	176,176,199	0.0	0.0	0.0	0,0,0
3405	0.02	9.76e-03	0.02	176,176,199	0.0	0.0	0.0	0,0,0
3406	0.02	9.24e-03	0.02	176,176,199	0.0	0.0	0.0	0,0,0
3407	0.02	0.01	0.02	176,176,199	0.0	0.0	0.0	0,0,0
3408	0.02	8.55e-03	0.02	172,172,197	0.0	0.0	0.0	0,0,0
3409	0.02	9.55e-03	0.02	176,176,199	0.0	0.0	0.0	0,0,0
3410	0.02	9.60e-03	0.02	176,176,199	0.0	0.0	0.0	0,0,0
3411	0.02	8.95e-03	0.02	176,176,199	0.0	0.0	0.0	0,0,0
3412	0.01	8.19e-03	0.02	176,176,199	0.0	0.0	0.0	0,0,0
3413	0.02	9.22e-03	0.02	176,176,199	0.0	0.0	0.0	0,0,0
3414	0.01	7.30e-03	0.02	172,172,197	0.0	0.0	0.0	0,0,0
3415	0.01	8.31e-03	0.02	176,176,199	0.0	0.0	0.0	0,0,0
3416	0.01	8.31e-03	0.02	176,176,199	0.0	0.0	0.0	0,0,0
3417	0.01	8.26e-03	0.02	176,176,199	0.0	0.0	0.0	0,0,0
3418	0.01	0.02	0.02	176,172,199	0.0	0.0	0.0	0,0,0
3419	0.02	9.22e-03	0.02	176,176,199	0.0	0.0	0.0	0,0,0
3420	0.01	7.88e-03	0.02	176,176,199	0.0	0.0	0.0	0,0,0
3421	0.01	8.59e-03	0.02	176,176,199	0.0	0.0	0.0	0,0,0
3422	0.02	9.20e-03	0.02	176,176,199	0.0	0.0	0.0	0,0,0
3423	0.02	9.12e-03	0.02	176,176,199	0.0	0.0	0.0	0,0,0

3424	0.01	8.11e-03	0.02	172,172,197	0.0	0.0	0.0	0,0,0
3425	0.02	9.89e-03	0.02	176,176,199	0.0	0.0	0.0	0,0,0
3426	0.02	8.79e-03	0.02	176,176,199	0.0	0.0	0.0	0,0,0
3427	0.02	9.30e-03	0.02	176,176,199	0.0	0.0	0.0	0,0,0
3428	0.02	9.70e-03	0.02	176,176,199	0.0	0.0	0.0	0,0,0
3429	0.02	9.50e-03	0.02	172,176,197	0.0	0.0	0.0	0,0,0
3430	0.02	8.80e-03	0.02	176,176,199	0.0	0.0	0.0	0,0,0
3431	0.02	7.81e-03	0.02	176,176,199	0.0	0.0	0.0	0,0,0
3432	0.02	8.52e-03	0.02	172,172,197	0.0	0.0	0.0	0,0,0
3433	0.02	8.71e-03	0.02	176,176,199	0.0	0.0	0.0	0,0,0
3434	0.02	8.29e-03	0.02	176,176,199	0.0	0.0	0.0	0,0,0
3435	0.02	7.66e-03	0.02	176,176,199	0.0	0.0	0.0	0,0,0
3436	0.02	8.46e-03	0.02	176,176,199	0.0	0.0	0.0	0,0,0
3437	0.01	7.07e-03	0.02	172,172,197	0.0	0.0	0.0	0,0,0
3438	0.01	8.00e-03	0.02	176,176,199	0.0	0.0	0.0	0,0,0
3439	0.01	8.07e-03	0.02	176,176,199	0.0	0.0	0.0	0,0,0
3440	0.01	7.49e-03	0.02	176,176,199	0.0	0.0	0.0	0,0,0
3441	0.01	6.71e-03	0.02	176,176,199	0.0	0.0	0.0	0,0,0
3442	0.01	7.45e-03	0.02	176,176,199	0.0	0.0	0.0	0,0,0
3443	0.01	6.01e-03	0.01	172,172,197	0.0	0.0	0.0	0,0,0
3444	0.01	7.00e-03	0.01	176,176,199	0.0	0.0	0.0	0,0,0
3445	0.01	7.36e-03	0.01	176,176,199	0.0	0.0	0.0	0,0,0
3446	0.01	0.01	0.02	176,161,199	0.0	0.0	0.0	0,0,0
3447	7.75e-03	0.04	9.67e-03	172,176,197	0.0	0.0	0.0	0,0,0
3448	0.01	7.42e-03	0.02	176,176,199	0.0	0.0	0.0	0,0,0
3449	0.01	6.51e-03	0.01	176,176,199	0.0	0.0	0.0	0,0,0
3450	0.01	7.26e-03	0.02	176,176,199	0.0	0.0	0.0	0,0,0
3451	0.01	7.81e-03	0.02	176,176,199	0.0	0.0	0.0	0,0,0
3452	0.01	7.73e-03	0.02	176,176,199	0.0	0.0	0.0	0,0,0
3453	0.01	6.79e-03	0.02	172,172,197	0.0	0.0	0.0	0,0,0
3454	0.01	8.15e-03	0.02	176,176,199	0.0	0.0	0.0	0,0,0
3455	0.01	7.35e-03	0.02	176,176,199	0.0	0.0	0.0	0,0,0
3456	0.02	7.98e-03	0.02	176,176,199	0.0	0.0	0.0	0,0,0
3457	0.02	8.40e-03	0.02	176,176,199	0.0	0.0	0.0	0,0,0
3458	0.02	8.23e-03	0.02	172,176,197	0.0	0.0	0.0	0,0,0
3459	0.02	7.62e-03	0.02	176,176,199	0.0	0.0	0.0	0,0,0
3460	0.01	6.77e-03	0.02	176,161,199	0.0	0.0	0.0	0,0,0
3461	0.01	7.02e-03	0.02	176,176,199	0.0	0.0	0.0	0,0,0
3462	0.01	7.07e-03	0.02	176,176,199	0.0	0.0	0.0	0,0,0
3463	0.01	6.71e-03	0.02	176,176,199	0.0	0.0	0.0	0,0,0
3464	0.01	6.17e-03	0.02	176,176,199	0.0	0.0	0.0	0,0,0
3465	0.01	6.30e-03	0.02	176,176,199	0.0	0.0	0.0	0,0,0
3466	0.01	5.70e-03	0.01	176,176,199	0.0	0.0	0.0	0,0,0
3467	0.01	6.35e-03	0.01	176,176,199	0.0	0.0	0.0	0,0,0
3468	0.01	6.39e-03	0.01	176,176,199	0.0	0.0	0.0	0,0,0
3469	0.01	5.96e-03	0.01	176,176,199	0.0	0.0	0.0	0,0,0
3470	9.63e-03	5.36e-03	0.01	176,176,199	0.0	0.0	0.0	0,0,0
3471	9.42e-03	5.47e-03	0.01	176,176,199	0.0	0.0	0.0	0,0,0
3472	8.13e-03	4.87e-03	0.01	176,176,199	0.0	0.0	0.0	0,0,0
3473	9.52e-03	5.68e-03	0.01	176,176,199	0.0	0.0	0.0	0,0,0
3474	0.01	9.03e-03	0.01	176,161,199	0.0	0.0	0.0	0,0,0
3475	6.57e-03	0.04	8.24e-03	172,176,197	0.0	0.0	0.0	0,0,0
3476	0.01	0.02	0.01	176,176,199	0.0	0.0	0.0	0,0,0
3477	9.34e-03	5.47e-03	0.01	176,176,199	0.0	0.0	0.0	0,0,0
3478	0.01	7.16e-03	0.02	176,176,199	0.0	0.0	0.0	0,0,0
3479	0.01	7.70e-03	0.02	176,176,199	0.0	0.0	0.0	0,0,0
3480	0.01	8.14e-03	0.02	176,176,199	0.0	0.0	0.0	0,0,0
3481	0.01	8.06e-03	0.02	176,176,199	0.0	0.0	0.0	0,0,0
3482	0.01	7.24e-03	0.02	176,176,199	0.0	0.0	0.0	0,0,0
3483	0.01	6.08e-03	0.01	176,176,199	0.0	0.0	0.0	0,0,0
3484	0.01	7.97e-03	0.02	176,176,199	0.0	0.0	0.0	0,0,0
3485	0.02	8.81e-03	0.02	176,176,199	0.0	0.0	0.0	0,0,0
3486	0.02	9.44e-03	0.02	176,176,199	0.0	0.0	0.0	0,0,0
3487	0.02	9.34e-03	0.02	176,176,199	0.0	0.0	0.0	0,0,0
3488	0.01	6.50e-03	0.02	176,176,199	0.0	0.0	0.0	0,0,0
3489	0.01	9.39e-03	0.02	176,161,199	0.0	0.0	0.0	0,0,0
3490	0.01	5.43e-03	0.01	176,176,199	0.0	0.0	0.0	0,0,0
3491	0.01	5.33e-03	0.01	176,176,199	0.0	0.0	0.0	0,0,0
3492	9.75e-03	5.06e-03	0.01	176,176,199	0.0	0.0	0.0	0,0,0
3493	9.20e-03	4.73e-03	0.01	176,176,199	0.0	0.0	0.0	0,0,0
3494	8.78e-03	4.66e-03	0.01	176,176,199	0.0	0.0	0.0	0,0,0
3495	8.03e-03	4.33e-03	0.01	176,176,199	0.0	0.0	0.0	0,0,0
3496	8.49e-03	4.63e-03	0.01	176,176,199	0.0	0.0	0.0	0,0,0
3497	8.31e-03	4.62e-03	0.01	176,176,199	0.0	0.0	0.0	0,0,0
3498	7.77e-03	4.38e-03	9.91e-03	176,176,199	0.0	0.0	0.0	0,0,0
3499	7.24e-03	4.05e-03	9.25e-03	176,176,199	0.0	0.0	0.0	0,0,0
3500	6.90e-03	4.01e-03	8.79e-03	176,176,199	0.0	0.0	0.0	0,0,0
3501	6.22e-03	3.73e-03	7.95e-03	176,176,199	0.0	0.0	0.0	0,0,0
3502	8.41e-03	0.01	0.01	176,157,199	0.0	0.0	0.0	0,0,0

3503	4.67e-03	0.03	5.92e-03	176,176,199	0.0	0.0	0.0	0,0,0
3504	9.05e-03	0.02	0.01	176,162,199	0.0	0.0	0.0	0,0,0
3505	7.08e-03	4.27e-03	9.01e-03	176,176,199	0.0	0.0	0.0	0,0,0
3506	6.89e-03	4.05e-03	8.74e-03	176,176,199	0.0	0.0	0.0	0,0,0
3507	8.41e-03	4.57e-03	0.01	176,176,199	0.0	0.0	0.0	0,0,0
3508	0.01	8.44e-03	0.01	176,161,199	0.0	0.0	0.0	0,0,0
3509	8.76e-03	0.01	0.01	176,176,199	0.0	0.0	0.0	0,0,0
3510	7.61e-03	5.10e-03	9.87e-03	172,157,197	0.0	0.0	0.0	0,0,0
3511	7.26e-03	4.70e-03	9.39e-03	172,157,197	0.0	0.0	0.0	0,0,0
3512	6.83e-03	3.82e-03	8.84e-03	172,157,197	0.0	0.0	0.0	0,0,0
3513	6.44e-03	3.47e-03	8.35e-03	172,157,197	0.0	0.0	0.0	0,0,0
3514	6.27e-03	4.94e-03	8.10e-03	172,157,197	0.0	0.0	0.0	0,0,0
3515	5.67e-03	3.15e-03	7.36e-03	172,172,197	0.0	0.0	0.0	0,0,0
3516	5.71e-03	3.20e-03	7.38e-03	172,172,197	0.0	0.0	0.0	0,0,0
3517	5.61e-03	3.18e-03	7.23e-03	172,172,197	0.0	0.0	0.0	0,0,0
3518	5.39e-03	3.09e-03	6.96e-03	172,172,197	0.0	0.0	0.0	0,0,0
3519	5.13e-03	2.97e-03	6.64e-03	172,172,197	0.0	0.0	0.0	0,0,0
3520	5.10e-03	3.81e-03	6.57e-03	172,157,197	0.0	0.0	0.0	0,0,0
3521	4.70e-03	2.87e-03	6.09e-03	172,172,197	0.0	0.0	0.0	0,0,0
3522	3.32e-03	0.01	4.40e-03	172,176,197	0.0	0.0	0.0	0,0,0
3523	6.53e-03	0.02	8.41e-03	172,161,197	0.0	0.0	0.0	0,0,0
3524	5.47e-03	3.40e-03	7.03e-03	176,176,199	0.0	0.0	0.0	0,0,0
3525	4.98e-03	3.10e-03	6.41e-03	176,176,197	0.0	0.0	0.0	0,0,0
3526	5.11e-03	3.35e-03	6.57e-03	172,157,197	0.0	0.0	0.0	0,0,0
3527	9.53e-03	5.93e-03	0.01	172,172,197	0.0	0.0	0.0	0,0,0
3528	0.01	6.28e-03	0.01	172,172,197	0.0	0.0	0.0	0,0,0
3529	0.01	6.54e-03	0.01	172,172,197	0.0	0.0	0.0	0,0,0
3530	0.01	6.53e-03	0.01	172,172,197	0.0	0.0	0.0	0,0,0
3531	0.01	6.29e-03	0.01	172,172,197	0.0	0.0	0.0	0,0,0
3532	6.18e-03	4.45e-03	7.98e-03	172,157,197	0.0	0.0	0.0	0,0,0
3533	0.01	6.66e-03	0.01	172,172,197	0.0	0.0	0.0	0,0,0
3534	0.01	7.33e-03	0.02	172,172,197	0.0	0.0	0.0	0,0,0
3535	0.01	7.73e-03	0.02	172,172,197	0.0	0.0	0.0	0,0,0
3536	0.01	7.66e-03	0.02	172,172,197	0.0	0.0	0.0	0,0,0
3537	8.57e-03	0.01	0.01	176,176,199	0.0	0.0	0.0	0,0,0
3538	6.23e-03	0.02	8.27e-03	171,176,197	0.0	0.0	0.0	0,0,0
3539	6.74e-03	0.01	8.88e-03	172,176,197	0.0	0.0	0.0	0,0,0
3540	6.83e-03	0.02	9.02e-03	172,176,197	0.0	0.0	0.0	0,0,0
3541	6.80e-03	8.72e-03	8.91e-03	172,172,197	0.0	0.0	0.0	0,0,0
3542	6.62e-03	0.01	8.73e-03	172,176,197	0.0	0.0	0.0	0,0,0
3543	6.53e-03	3.82e-03	8.56e-03	172,172,197	0.0	0.0	0.0	0,0,0
3544	6.42e-03	6.16e-03	8.47e-03	172,161,197	0.0	0.0	0.0	0,0,0
3545	6.27e-03	3.70e-03	8.23e-03	172,172,197	0.0	0.0	0.0	0,0,0
3546	6.25e-03	3.75e-03	8.24e-03	172,172,197	0.0	0.0	0.0	0,0,0
3547	6.17e-03	3.63e-03	8.08e-03	172,172,197	0.0	0.0	0.0	0,0,0
3548	5.91e-03	3.51e-03	7.83e-03	172,172,197	0.0	0.0	0.0	0,0,0
3549	5.66e-03	3.38e-03	7.45e-03	172,172,197	0.0	0.0	0.0	0,0,0
3550	5.62e-03	3.37e-03	7.45e-03	172,172,197	0.0	0.0	0.0	0,0,0
3551	5.57e-03	3.27e-03	7.30e-03	172,181,197	0.0	0.0	0.0	0,0,0
3552	5.60e-03	3.34e-03	7.41e-03	172,172,197	0.0	0.0	0.0	0,0,0
3553	5.48e-03	3.26e-03	7.18e-03	172,172,197	0.0	0.0	0.0	0,0,0
3554	5.64e-03	3.35e-03	7.45e-03	172,172,197	0.0	0.0	0.0	0,0,0
3555	5.39e-03	3.27e-03	7.09e-03	172,172,197	0.0	0.0	0.0	0,0,0
3556	5.63e-03	3.34e-03	7.43e-03	172,172,197	0.0	0.0	0.0	0,0,0
3557	5.31e-03	3.24e-03	7.04e-03	172,172,197	0.0	0.0	0.0	0,0,0
3558	5.56e-03	3.27e-03	7.34e-03	172,172,197	0.0	0.0	0.0	0,0,0
3559	5.36e-03	3.23e-03	7.09e-03	172,172,197	0.0	0.0	0.0	0,0,0
3560	5.34e-03	3.10e-03	7.08e-03	172,172,197	0.0	0.0	0.0	0,0,0
3561	5.27e-03	3.07e-03	6.98e-03	172,172,197	0.0	0.0	0.0	0,0,0
3562	5.46e-03	3.18e-03	7.22e-03	172,172,197	0.0	0.0	0.0	0,0,0
3563	7.10e-03	3.97e-03	9.36e-03	172,172,197	0.0	0.0	0.0	0,0,0
3564	7.31e-03	4.10e-03	9.63e-03	172,172,197	0.0	0.0	0.0	0,0,0
3565	6.29e-03	3.56e-03	8.29e-03	172,172,197	0.0	0.0	0.0	0,0,0
3566	5.65e-03	3.21e-03	7.44e-03	172,172,197	0.0	0.0	0.0	0,0,0
3567	5.75e-03	3.29e-03	7.59e-03	172,172,197	0.0	0.0	0.0	0,0,0
3568	5.14e-03	3.10e-03	6.79e-03	172,172,197	0.0	0.0	0.0	0,0,0
3569	5.39e-03	3.16e-03	7.14e-03	172,172,197	0.0	0.0	0.0	0,0,0
3570	5.15e-03	3.14e-03	6.85e-03	172,172,197	0.0	0.0	0.0	0,0,0
3571	5.53e-03	3.21e-03	7.33e-03	172,172,197	0.0	0.0	0.0	0,0,0
3572	5.56e-03	3.35e-03	7.35e-03	172,172,197	0.0	0.0	0.0	0,0,0
3573	5.79e-03	3.44e-03	7.65e-03	172,172,197	0.0	0.0	0.0	0,0,0
3574	5.76e-03	3.35e-03	7.56e-03	172,172,197	0.0	0.0	0.0	0,0,0
3575	5.80e-03	3.48e-03	7.66e-03	172,172,197	0.0	0.0	0.0	0,0,0
3576	5.98e-03	3.44e-03	7.84e-03	172,172,197	0.0	0.0	0.0	0,0,0
3577	5.87e-03	3.51e-03	7.75e-03	172,172,197	0.0	0.0	0.0	0,0,0
3578	6.08e-03	3.48e-03	7.96e-03	172,172,197	0.0	0.0	0.0	0,0,0
3579	5.82e-03	3.49e-03	7.69e-03	172,172,197	0.0	0.0	0.0	0,0,0
3580	6.13e-03	3.50e-03	8.02e-03	172,172,197	0.0	0.0	0.0	0,0,0
3581	5.77e-03	3.49e-03	7.64e-03	172,172,197	0.0	0.0	0.0	0,0,0

3582	6.13e-03	3.52e-03	8.06e-03	172,172,197	0.0	0.0	0.0	0,0,0
3583	6.05e-03	3.58e-03	8.01e-03	172,172,197	0.0	0.0	0.0	0,0,0
3584	6.26e-03	3.75e-03	8.27e-03	172,172,197	0.0	0.0	0.0	0,0,0
3585	6.44e-03	3.87e-03	8.50e-03	172,172,197	0.0	0.0	0.0	0,0,0
3586	6.72e-03	3.85e-03	8.82e-03	172,172,197	0.0	0.0	0.0	0,0,0
3587	6.53e-03	3.93e-03	8.62e-03	172,172,197	0.0	0.0	0.0	0,0,0
3588	7.31e-03	4.16e-03	9.55e-03	172,172,197	0.0	0.0	0.0	0,0,0
3589	6.94e-03	9.76e-03	9.15e-03	172,161,197	0.0	0.0	0.0	0,0,0
3590	7.64e-03	9.81e-03	1.00e-02	172,172,197	0.0	0.0	0.0	0,0,0
3591	7.18e-03	0.02	9.48e-03	172,176,197	0.0	0.0	0.0	0,0,0
3592	7.58e-03	0.01	9.93e-03	172,176,197	0.0	0.0	0.0	0,0,0
3593	6.56e-03	0.02	8.69e-03	172,176,197	0.0	0.0	0.0	0,0,0
3594	0.01	7.70e-03	0.02	176,176,199	0.0	0.0	0.0	0,0,0
3595	0.02	0.01	0.02	176,176,199	0.0	0.0	0.0	0,0,0
3596	0.02	0.01	0.02	176,176,199	0.0	0.0	0.0	0,0,0
3597	0.02	0.01	0.02	176,176,199	0.0	0.0	0.0	0,0,0
3598	0.02	0.01	0.02	176,176,199	0.0	0.0	0.0	0,0,0
3599	0.01	7.60e-03	0.02	176,176,199	0.0	0.0	0.0	0,0,0
3600	0.01	7.43e-03	0.02	176,176,199	0.0	0.0	0.0	0,0,0
3601	0.01	7.14e-03	0.02	176,176,199	0.0	0.0	0.0	0,0,0
3602	0.01	7.80e-03	0.02	176,176,199	0.0	0.0	0.0	0,0,0
3603	0.01	7.43e-03	0.02	176,176,199	0.0	0.0	0.0	0,0,0
3604	0.01	6.48e-03	0.01	176,176,199	0.0	0.0	0.0	0,0,0
3605	0.02	0.01	0.02	176,176,199	0.0	0.0	0.0	0,0,0
3606	0.01	6.38e-03	0.01	176,176,199	0.0	0.0	0.0	0,0,0
3607	0.01	7.57e-03	0.02	176,176,199	0.0	0.0	0.0	0,0,0
3608	0.01	7.90e-03	0.02	176,176,199	0.0	0.0	0.0	0,0,0
3609	0.01	7.32e-03	0.02	176,176,199	0.0	0.0	0.0	0,0,0
3610	0.01	6.20e-03	0.01	176,176,199	0.0	0.0	0.0	0,0,0
3611	0.02	0.01	0.02	176,176,199	0.0	0.0	0.0	0,0,0
3612	9.58e-03	5.85e-03	0.01	183,183,199	0.0	0.0	0.0	0,0,0
3613	0.01	7.05e-03	0.01	176,176,199	0.0	0.0	0.0	0,0,0
3614	0.01	7.65e-03	0.02	176,176,199	0.0	0.0	0.0	0,0,0
3615	0.01	8.78e-03	0.01	176,176,199	0.0	0.0	0.0	0,0,0
3616	0.01	0.01	0.02	176,172,199	0.0	0.0	0.0	0,0,0
3617	0.02	0.01	0.02	176,176,199	0.0	0.0	0.0	0,0,0
3618	0.01	6.18e-03	0.01	176,176,199	0.0	0.0	0.0	0,0,0
3619	0.01	7.32e-03	0.01	176,176,199	0.0	0.0	0.0	0,0,0
3620	0.01	7.89e-03	0.02	176,176,199	0.0	0.0	0.0	0,0,0
3621	0.01	7.56e-03	0.02	176,176,199	0.0	0.0	0.0	0,0,0
3622	0.01	6.24e-03	0.01	176,176,199	0.0	0.0	0.0	0,0,0
3623	0.02	0.01	0.02	176,176,199	0.0	0.0	0.0	0,0,0
3624	0.01	6.42e-03	0.01	176,176,199	0.0	0.0	0.0	0,0,0
3625	0.01	7.40e-03	0.02	176,176,199	0.0	0.0	0.0	0,0,0
3626	0.01	7.78e-03	0.02	176,176,199	0.0	0.0	0.0	0,0,0
3627	0.01	7.11e-03	0.02	176,176,199	0.0	0.0	0.0	0,0,0
3628	0.01	7.33e-03	0.02	176,176,199	0.0	0.0	0.0	0,0,0
3629	0.01	5.91e-03	0.01	176,176,199	0.0	0.0	0.0	0,0,0
3630	0.01	7.11e-03	0.02	176,176,199	0.0	0.0	0.0	0,0,0
3631	0.01	7.81e-03	0.02	176,176,199	0.0	0.0	0.0	0,0,0
3632	0.01	7.41e-03	0.02	176,176,199	0.0	0.0	0.0	0,0,0
3633	0.01	6.38e-03	0.01	176,176,199	0.0	0.0	0.0	0,0,0
3634	0.01	7.17e-03	0.02	176,176,199	0.0	0.0	0.0	0,0,0
3635	0.01	6.20e-03	0.01	176,176,199	0.0	0.0	0.0	0,0,0
3636	0.01	7.56e-03	0.02	176,176,199	0.0	0.0	0.0	0,0,0
3637	0.01	7.91e-03	0.02	176,176,199	0.0	0.0	0.0	0,0,0
3638	0.01	7.31e-03	0.02	176,176,199	0.0	0.0	0.0	0,0,0
3639	0.01	6.10e-03	0.01	176,176,199	0.0	0.0	0.0	0,0,0
3640	0.01	6.79e-03	0.01	176,176,199	0.0	0.0	0.0	0,0,0
3641	9.18e-03	5.71e-03	0.01	176,176,199	0.0	0.0	0.0	0,0,0
3642	0.01	7.05e-03	0.01	176,176,199	0.0	0.0	0.0	0,0,0
3643	0.01	7.71e-03	0.02	176,176,199	0.0	0.0	0.0	0,0,0
3644	0.01	9.06e-03	0.02	176,176,199	0.0	0.0	0.0	0,0,0
3645	8.01e-03	4.98e-03	9.90e-03	176,176,199	0.0	0.0	0.0	0,0,0
3646	0.01	6.80e-03	0.01	176,176,199	0.0	0.0	0.0	0,0,0
3647	0.01	6.10e-03	0.01	176,176,199	0.0	0.0	0.0	0,0,0
3648	0.01	7.31e-03	0.01	176,176,199	0.0	0.0	0.0	0,0,0
3649	0.01	7.91e-03	0.02	176,176,199	0.0	0.0	0.0	0,0,0
3650	0.01	7.55e-03	0.02	176,176,199	0.0	0.0	0.0	0,0,0
3651	0.01	6.16e-03	0.01	176,176,199	0.0	0.0	0.0	0,0,0
3652	0.01	7.06e-03	0.01	176,176,199	0.0	0.0	0.0	0,0,0
3653	0.01	6.33e-03	0.01	176,176,199	0.0	0.0	0.0	0,0,0
3654	0.01	7.40e-03	0.02	176,176,199	0.0	0.0	0.0	0,0,0
3655	0.01	7.81e-03	0.02	176,176,199	0.0	0.0	0.0	0,0,0
3656	0.01	7.10e-03	0.02	176,176,199	0.0	0.0	0.0	0,0,0
3657	0.01	5.81e-03	0.01	176,176,199	0.0	0.0	0.0	0,0,0
3658	8.43e-03	4.62e-03	0.01	176,176,199	0.0	0.0	0.0	0,0,0
3659	9.76e-03	5.43e-03	0.01	176,176,199	0.0	0.0	0.0	0,0,0
3660	9.99e-03	5.70e-03	0.01	176,176,199	0.0	0.0	0.0	0,0,0

3661	9.52e-03	5.46e-03	0.01	176,176,199	0.0	0.0	0.0	0,0,0
3662	8.63e-03	4.88e-03	0.01	176,176,199	0.0	0.0	0.0	0,0,0
3663	8.38e-03	4.82e-03	0.01	176,176,199	0.0	0.0	0.0	0,0,0
3664	8.14e-03	4.77e-03	0.01	176,176,199	0.0	0.0	0.0	0,0,0
3665	9.18e-03	5.40e-03	0.01	176,176,199	0.0	0.0	0.0	0,0,0
3666	9.38e-03	5.57e-03	0.01	176,176,199	0.0	0.0	0.0	0,0,0
3667	8.81e-03	5.27e-03	0.01	176,176,199	0.0	0.0	0.0	0,0,0
3668	7.77e-03	4.63e-03	9.78e-03	176,176,199	0.0	0.0	0.0	0,0,0
3669	7.46e-03	4.50e-03	9.37e-03	176,176,199	0.0	0.0	0.0	0,0,0
3670	7.08e-03	4.41e-03	8.88e-03	176,176,199	0.0	0.0	0.0	0,0,0
3671	8.40e-03	5.14e-03	0.01	176,176,199	0.0	0.0	0.0	0,0,0
3672	9.66e-03	6.01e-03	0.01	176,176,199	0.0	0.0	0.0	0,0,0
3673	6.68e-03	4.16e-03	8.31e-03	176,176,199	0.0	0.0	0.0	0,0,0
3674	6.98e-03	6.39e-03	8.85e-03	176,161,199	0.0	0.0	0.0	0,0,0
3675	7.52e-03	4.55e-03	9.43e-03	176,176,199	0.0	0.0	0.0	0,0,0
3676	8.84e-03	0.02	0.01	176,176,199	0.0	0.0	0.0	0,0,0
3677	9.90e-03	0.01	0.01	176,161,199	0.0	0.0	0.0	0,0,0
3678	0.01	0.01	0.01	176,161,199	0.0	0.0	0.0	0,0,0
3679	0.01	0.01	0.01	176,161,199	0.0	0.0	0.0	0,0,0
3680	9.23e-03	0.02	0.01	176,176,199	0.0	0.0	0.0	0,0,0
3681	8.15e-03	4.75e-03	0.01	176,176,199	0.0	0.0	0.0	0,0,0
3682	9.72e-03	0.02	0.01	176,176,199	0.0	0.0	0.0	0,0,0
3683	0.01	0.01	0.01	176,161,199	0.0	0.0	0.0	0,0,0
3684	0.01	0.01	0.01	176,161,199	0.0	0.0	0.0	0,0,0
3685	0.01	0.01	0.01	176,161,199	0.0	0.0	0.0	0,0,0
3686	8.24e-03	4.55e-03	0.01	176,176,199	0.0	0.0	0.0	0,0,0
3687	7.56e-03	8.42e-03	9.75e-03	176,176,199	0.0	0.0	0.0	0,0,0
3688	7.30e-03	4.07e-03	9.32e-03	176,176,199	0.0	0.0	0.0	0,0,0
3689	7.22e-03	4.09e-03	9.19e-03	176,176,199	0.0	0.0	0.0	0,0,0
3690	6.88e-03	3.93e-03	8.76e-03	176,176,199	0.0	0.0	0.0	0,0,0
3691	6.62e-03	3.76e-03	8.47e-03	176,176,199	0.0	0.0	0.0	0,0,0
3692	6.23e-03	3.59e-03	7.99e-03	176,176,199	0.0	0.0	0.0	0,0,0
3693	6.21e-03	3.61e-03	7.93e-03	176,176,199	0.0	0.0	0.0	0,0,0
3694	6.37e-03	3.74e-03	8.08e-03	176,176,199	0.0	0.0	0.0	0,0,0
3695	6.37e-03	3.77e-03	8.07e-03	176,176,199	0.0	0.0	0.0	0,0,0
3696	6.12e-03	3.65e-03	7.77e-03	176,176,199	0.0	0.0	0.0	0,0,0
3697	5.84e-03	3.48e-03	7.45e-03	176,176,199	0.0	0.0	0.0	0,0,0
3698	5.52e-03	3.33e-03	7.04e-03	176,176,199	0.0	0.0	0.0	0,0,0
3699	5.40e-03	3.33e-03	7.09e-03	162,176,199	0.0	0.0	0.0	0,0,0
3700	6.54e-03	3.99e-03	8.29e-03	176,176,199	0.0	0.0	0.0	0,0,0
3701	4.42e-03	2.75e-03	5.62e-03	176,176,199	0.0	0.0	0.0	0,0,0
3702	5.69e-03	6.43e-03	7.19e-03	176,161,199	0.0	0.0	0.0	0,0,0
3703	6.28e-03	3.91e-03	7.96e-03	176,176,199	0.0	0.0	0.0	0,0,0
3704	5.63e-03	3.41e-03	7.15e-03	176,176,199	0.0	0.0	0.0	0,0,0
3705	5.13e-03	0.04	6.48e-03	176,176,199	0.0	0.0	0.0	0,0,0
3706	5.00e-03	0.04	6.37e-03	176,172,199	0.0	0.0	0.0	0,0,0
3707	5.09e-03	0.04	6.50e-03	176,172,199	0.0	0.0	0.0	0,0,0
3708	5.33e-03	0.04	6.79e-03	176,172,199	0.0	0.0	0.0	0,0,0
3709	5.54e-03	0.04	7.03e-03	176,176,199	0.0	0.0	0.0	0,0,0
3710	6.16e-03	3.60e-03	7.90e-03	176,176,199	0.0	0.0	0.0	0,0,0
3711	5.88e-03	0.04	7.45e-03	176,157,199	0.0	0.0	0.0	0,0,0
3712	5.58e-03	0.04	7.09e-03	176,172,199	0.0	0.0	0.0	0,0,0
3713	5.63e-03	0.05	7.14e-03	176,172,199	0.0	0.0	0.0	0,0,0
3714	6.08e-03	0.05	7.70e-03	176,172,199	0.0	0.0	0.0	0,0,0
3715	7.55e-03	7.91e-03	9.72e-03	176,176,199	0.0	0.0	0.0	0,0,0
3716	6.65e-03	0.01	8.58e-03	176,176,199	0.0	0.0	0.0	0,0,0
3717	6.00e-03	3.38e-03	7.76e-03	172,172,197	0.0	0.0	0.0	0,0,0
3718	5.79e-03	3.28e-03	7.48e-03	172,172,197	0.0	0.0	0.0	0,0,0
3719	5.48e-03	3.14e-03	7.08e-03	172,176,197	0.0	0.0	0.0	0,0,0
3720	5.33e-03	3.09e-03	6.86e-03	176,176,199	0.0	0.0	0.0	0,0,0
3721	5.13e-03	3.00e-03	6.62e-03	172,172,197	0.0	0.0	0.0	0,0,0
3722	4.98e-03	2.95e-03	6.41e-03	176,176,199	0.0	0.0	0.0	0,0,0
3723	4.89e-03	2.97e-03	6.30e-03	176,176,199	0.0	0.0	0.0	0,0,0
3724	4.81e-03	2.87e-03	6.18e-03	176,176,199	0.0	0.0	0.0	0,0,0
3725	4.73e-03	2.84e-03	6.08e-03	176,176,199	0.0	0.0	0.0	0,0,0
3726	4.71e-03	2.84e-03	6.04e-03	176,176,199	0.0	0.0	0.0	0,0,0
3727	4.56e-03	2.78e-03	5.86e-03	172,172,197	0.0	0.0	0.0	0,0,0
3728	4.46e-03	2.77e-03	5.74e-03	172,172,197	0.0	0.0	0.0	0,0,0
3729	3.65e-03	2.27e-03	4.68e-03	176,176,199	0.0	0.0	0.0	0,0,0
3730	4.34e-03	8.94e-03	5.61e-03	172,157,197	0.0	0.0	0.0	0,0,0
3731	4.98e-03	3.10e-03	6.39e-03	176,176,199	0.0	0.0	0.0	0,0,0
3732	4.77e-03	2.97e-03	6.13e-03	172,172,197	0.0	0.0	0.0	0,0,0
3733	4.51e-03	2.81e-03	5.82e-03	172,172,197	0.0	0.0	0.0	0,0,0
3734	6.46e-03	0.02	8.38e-03	172,176,197	0.0	0.0	0.0	0,0,0
3735	6.56e-03	0.02	8.46e-03	172,176,197	0.0	0.0	0.0	0,0,0
3736	6.94e-03	0.02	8.94e-03	172,161,197	0.0	0.0	0.0	0,0,0
3737	6.97e-03	0.02	9.00e-03	172,176,197	0.0	0.0	0.0	0,0,0
3738	6.73e-03	0.02	8.74e-03	172,176,197	0.0	0.0	0.0	0,0,0
3739	5.15e-03	3.06e-03	6.63e-03	172,172,197	0.0	0.0	0.0	0,0,0

3740	7.26e-03	0.03	9.41e-03	172,176,197	0.0	0.0	0.0	0,0,0
3741	7.93e-03	0.02	0.01	172,176,197	0.0	0.0	0.0	0,0,0
3742	8.35e-03	0.02	0.01	172,176,197	0.0	0.0	0.0	0,0,0
3743	8.35e-03	0.03	0.01	172,176,197	0.0	0.0	0.0	0,0,0
3744	6.71e-03	0.01	8.65e-03	176,176,199	0.0	0.0	0.0	0,0,0
3745	5.73e-03	0.02	7.49e-03	176,176,199	0.0	0.0	0.0	0,0,0
3746	6.18e-03	0.01	8.10e-03	172,157,197	0.0	0.0	0.0	0,0,0
3747	6.01e-03	9.44e-03	7.85e-03	172,161,197	0.0	0.0	0.0	0,0,0
3748	6.26e-03	5.34e-03	8.21e-03	172,157,197	0.0	0.0	0.0	0,0,0
3749	5.90e-03	3.91e-03	7.70e-03	172,161,197	0.0	0.0	0.0	0,0,0
3750	6.07e-03	3.55e-03	7.95e-03	172,172,197	0.0	0.0	0.0	0,0,0
3751	5.79e-03	3.46e-03	7.56e-03	172,172,197	0.0	0.0	0.0	0,0,0
3752	5.93e-03	3.46e-03	7.77e-03	172,172,197	0.0	0.0	0.0	0,0,0
3753	5.77e-03	3.44e-03	7.51e-03	172,172,197	0.0	0.0	0.0	0,0,0
3754	5.84e-03	3.40e-03	7.63e-03	172,172,197	0.0	0.0	0.0	0,0,0
3755	5.37e-03	3.21e-03	7.03e-03	172,172,197	0.0	0.0	0.0	0,0,0
3756	5.36e-03	3.14e-03	7.05e-03	172,172,197	0.0	0.0	0.0	0,0,0
3757	5.24e-03	3.13e-03	6.85e-03	172,172,197	0.0	0.0	0.0	0,0,0
3758	5.27e-03	3.09e-03	6.92e-03	172,172,197	0.0	0.0	0.0	0,0,0
3759	5.17e-03	3.10e-03	6.75e-03	172,172,197	0.0	0.0	0.0	0,0,0
3760	5.18e-03	3.05e-03	6.79e-03	172,172,197	0.0	0.0	0.0	0,0,0
3761	5.11e-03	3.07e-03	6.67e-03	172,172,197	0.0	0.0	0.0	0,0,0
3762	5.09e-03	3.02e-03	6.67e-03	172,172,197	0.0	0.0	0.0	0,0,0
3763	5.06e-03	3.06e-03	6.60e-03	172,172,197	0.0	0.0	0.0	0,0,0
3764	5.00e-03	3.00e-03	6.55e-03	172,172,197	0.0	0.0	0.0	0,0,0
3765	5.04e-03	3.04e-03	6.56e-03	172,172,197	0.0	0.0	0.0	0,0,0
3766	4.92e-03	2.95e-03	6.43e-03	172,172,197	0.0	0.0	0.0	0,0,0
3767	4.66e-03	2.80e-03	6.09e-03	172,172,197	0.0	0.0	0.0	0,0,0
3768	4.50e-03	2.71e-03	5.92e-03	172,172,197	0.0	0.0	0.0	0,0,0
3769	4.63e-03	2.81e-03	6.04e-03	172,172,197	0.0	0.0	0.0	0,0,0
3770	4.62e-03	2.79e-03	6.06e-03	172,172,197	0.0	0.0	0.0	0,0,0
3771	4.59e-03	2.82e-03	5.96e-03	172,172,197	0.0	0.0	0.0	0,0,0
3772	4.77e-03	2.87e-03	6.27e-03	172,172,197	0.0	0.0	0.0	0,0,0
3773	4.60e-03	2.85e-03	6.03e-03	172,172,197	0.0	0.0	0.0	0,0,0
3774	4.78e-03	2.91e-03	6.23e-03	172,172,197	0.0	0.0	0.0	0,0,0
3775	4.67e-03	2.83e-03	6.12e-03	172,172,197	0.0	0.0	0.0	0,0,0
3776	4.79e-03	2.90e-03	6.24e-03	172,172,197	0.0	0.0	0.0	0,0,0
3777	4.74e-03	2.86e-03	6.23e-03	172,172,197	0.0	0.0	0.0	0,0,0
3778	4.87e-03	2.95e-03	6.37e-03	172,172,197	0.0	0.0	0.0	0,0,0
3779	5.08e-03	3.06e-03	6.64e-03	172,172,197	0.0	0.0	0.0	0,0,0
3780	5.20e-03	3.17e-03	6.72e-03	172,172,197	0.0	0.0	0.0	0,0,0
3781	5.29e-03	3.10e-03	6.94e-03	172,172,197	0.0	0.0	0.0	0,0,0
3782	5.31e-03	3.24e-03	6.90e-03	172,172,197	0.0	0.0	0.0	0,0,0
3783	5.48e-03	3.18e-03	7.18e-03	172,172,197	0.0	0.0	0.0	0,0,0
3784	5.39e-03	3.27e-03	7.01e-03	172,172,197	0.0	0.0	0.0	0,0,0
3785	5.57e-03	3.20e-03	7.29e-03	172,172,197	0.0	0.0	0.0	0,0,0
3786	5.43e-03	3.28e-03	7.05e-03	172,172,197	0.0	0.0	0.0	0,0,0
3787	5.61e-03	3.22e-03	7.34e-03	172,172,197	0.0	0.0	0.0	0,0,0
3788	5.45e-03	3.29e-03	7.08e-03	172,172,197	0.0	0.0	0.0	0,0,0
3789	5.63e-03	3.24e-03	7.39e-03	172,172,197	0.0	0.0	0.0	0,0,0
3790	5.52e-03	3.30e-03	7.20e-03	172,172,197	0.0	0.0	0.0	0,0,0
3791	5.87e-03	3.44e-03	7.67e-03	172,172,197	0.0	0.0	0.0	0,0,0
3792	5.80e-03	3.50e-03	7.53e-03	172,172,197	0.0	0.0	0.0	0,0,0
3793	6.18e-03	3.57e-03	8.10e-03	172,172,197	0.0	0.0	0.0	0,0,0
3794	5.94e-03	3.55e-03	7.73e-03	172,172,197	0.0	0.0	0.0	0,0,0
3795	6.67e-03	3.82e-03	8.71e-03	172,172,197	0.0	0.0	0.0	0,0,0
3796	6.19e-03	3.66e-03	8.07e-03	172,172,197	0.0	0.0	0.0	0,0,0
3797	6.95e-03	8.04e-03	9.08e-03	172,157,197	0.0	0.0	0.0	0,0,0
3798	6.32e-03	9.15e-03	8.24e-03	172,161,197	0.0	0.0	0.0	0,0,0
3799	6.87e-03	0.01	8.99e-03	172,172,197	0.0	0.0	0.0	0,0,0
3800	6.00e-03	0.01	7.83e-03	176,176,199	0.0	0.0	0.0	0,0,0
3801	0.02	9.81e-03	0.02	176,176,199	0.0	0.0	0.0	0,0,0
3802	0.03	0.01	0.03	176,176,199	0.0	0.0	0.0	0,0,0
3803	0.02	0.01	0.03	176,176,199	0.0	0.0	0.0	0,0,0
3804	0.02	0.01	0.03	176,176,199	0.0	0.0	0.0	0,0,0
3805	0.03	0.01	0.03	176,176,199	0.0	0.0	0.0	0,0,0
3806	0.02	9.65e-03	0.02	176,176,199	0.0	0.0	0.0	0,0,0
3807	0.02	9.65e-03	0.02	176,176,199	0.0	0.0	0.0	0,0,0
3808	0.02	0.01	0.02	176,172,197	0.0	0.0	0.0	0,0,0
3809	0.02	0.01	0.02	176,176,199	0.0	0.0	0.0	0,0,0
3810	0.02	9.30e-03	0.02	176,176,199	0.0	0.0	0.0	0,0,0
3811	0.02	9.64e-03	0.02	176,176,199	0.0	0.0	0.0	0,0,0
3812	0.03	0.01	0.03	176,176,199	0.0	0.0	0.0	0,0,0
3813	0.01	7.22e-03	0.02	172,176,197	0.0	0.0	0.0	0,0,0
3814	0.02	9.16e-03	0.02	176,176,199	0.0	0.0	0.0	0,0,0
3815	0.02	9.50e-03	0.02	176,176,199	0.0	0.0	0.0	0,0,0
3816	0.01	8.55e-03	0.02	176,176,199	0.0	0.0	0.0	0,0,0
3817	0.01	6.90e-03	0.02	176,176,199	0.0	0.0	0.0	0,0,0
3818	0.02	0.01	0.03	176,176,199	0.0	0.0	0.0	0,0,0

3819	0.01	6.08e-03	0.01	172,176,197	0.0	0.0	0.0	0,0,0
3820	0.01	8.08e-03	0.02	176,176,199	0.0	0.0	0.0	0,0,0
3821	0.01	8.63e-03	0.02	176,176,199	0.0	0.0	0.0	0,0,0
3822	0.01	9.19e-03	0.02	176,176,199	0.0	0.0	0.0	0,0,0
3823	9.72e-03	6.05e-03	0.01	176,176,199	0.0	0.0	0.0	0,0,0
3824	0.02	0.01	0.03	176,176,199	0.0	0.0	0.0	0,0,0
3825	0.01	6.68e-03	0.01	176,176,199	0.0	0.0	0.0	0,0,0
3826	0.01	8.33e-03	0.02	176,176,199	0.0	0.0	0.0	0,0,0
3827	0.02	9.26e-03	0.02	176,176,199	0.0	0.0	0.0	0,0,0
3828	0.02	8.91e-03	0.02	176,176,199	0.0	0.0	0.0	0,0,0
3829	0.01	6.93e-03	0.02	172,176,197	0.0	0.0	0.0	0,0,0
3830	0.02	0.01	0.03	176,176,199	0.0	0.0	0.0	0,0,0
3831	0.01	7.56e-03	0.02	176,176,199	0.0	0.0	0.0	0,0,0
3832	0.02	9.04e-03	0.02	176,176,199	0.0	0.0	0.0	0,0,0
3833	0.02	9.77e-03	0.02	176,176,199	0.0	0.0	0.0	0,0,0
3834	0.02	0.01	0.02	176,172,199	0.0	0.0	0.0	0,0,0
3835	0.02	9.46e-03	0.02	176,176,199	0.0	0.0	0.0	0,0,0
3836	0.01	9.79e-03	0.02	172,157,197	0.0	0.0	0.0	0,0,0
3837	0.02	9.62e-03	0.02	176,176,199	0.0	0.0	0.0	0,0,0
3838	0.02	0.01	0.02	176,176,199	0.0	0.0	0.0	0,0,0
3839	0.02	9.61e-03	0.02	176,176,199	0.0	0.0	0.0	0,0,0
3840	0.02	8.07e-03	0.02	176,176,199	0.0	0.0	0.0	0,0,0
3841	0.01	7.10e-03	0.02	176,176,199	0.0	0.0	0.0	0,0,0
3842	0.01	7.39e-03	0.02	172,176,199	0.0	0.0	0.0	0,0,0
3843	0.02	9.45e-03	0.02	176,176,199	0.0	0.0	0.0	0,0,0
3844	0.02	9.85e-03	0.02	176,176,199	0.0	0.0	0.0	0,0,0
3845	0.02	8.85e-03	0.02	176,176,199	0.0	0.0	0.0	0,0,0
3846	0.01	7.10e-03	0.02	176,176,199	0.0	0.0	0.0	0,0,0
3847	0.01	6.29e-03	0.01	176,176,199	0.0	0.0	0.0	0,0,0
3848	0.01	6.24e-03	0.01	172,176,197	0.0	0.0	0.0	0,0,0
3849	0.01	8.38e-03	0.02	176,176,199	0.0	0.0	0.0	0,0,0
3850	0.01	8.81e-03	0.02	176,176,199	0.0	0.0	0.0	0,0,0
3851	0.01	0.01	0.02	176,176,199	0.0	0.0	0.0	0,0,0
3852	9.02e-03	5.62e-03	0.01	176,176,199	0.0	0.0	0.0	0,0,0
3853	0.01	6.20e-03	0.01	176,176,199	0.0	0.0	0.0	0,0,0
3854	0.01	6.93e-03	0.02	176,176,199	0.0	0.0	0.0	0,0,0
3855	0.01	8.68e-03	0.02	176,176,199	0.0	0.0	0.0	0,0,0
3856	0.02	9.67e-03	0.02	176,176,199	0.0	0.0	0.0	0,0,0
3857	0.02	9.26e-03	0.02	176,176,199	0.0	0.0	0.0	0,0,0
3858	0.01	7.16e-03	0.02	172,176,197	0.0	0.0	0.0	0,0,0
3859	0.01	6.86e-03	0.02	176,176,199	0.0	0.0	0.0	0,0,0
3860	0.02	7.84e-03	0.02	176,176,199	0.0	0.0	0.0	0,0,0
3861	0.02	9.42e-03	0.02	176,176,199	0.0	0.0	0.0	0,0,0
3862	0.02	0.01	0.02	176,176,199	0.0	0.0	0.0	0,0,0
3863	0.02	9.44e-03	0.02	176,176,199	0.0	0.0	0.0	0,0,0
3864	0.01	9.35e-03	0.02	172,157,197	0.0	0.0	0.0	0,0,0
3865	0.01	0.02	0.02	172,176,197	0.0	0.0	0.0	0,0,0
3866	0.01	6.49e-03	0.02	172,176,197	0.0	0.0	0.0	0,0,0
3867	0.01	6.46e-03	0.02	176,176,199	0.0	0.0	0.0	0,0,0
3868	0.01	6.02e-03	0.01	176,176,199	0.0	0.0	0.0	0,0,0
3869	0.01	5.44e-03	0.01	176,176,199	0.0	0.0	0.0	0,0,0
3870	8.99e-03	4.48e-03	0.01	172,172,197	0.0	0.0	0.0	0,0,0
3871	9.35e-03	4.94e-03	0.01	172,172,197	0.0	0.0	0.0	0,0,0
3872	0.01	5.55e-03	0.01	176,176,199	0.0	0.0	0.0	0,0,0
3873	0.01	5.57e-03	0.01	176,176,199	0.0	0.0	0.0	0,0,0
3874	9.15e-03	5.15e-03	0.01	176,176,199	0.0	0.0	0.0	0,0,0
3875	8.29e-03	4.57e-03	0.01	176,176,199	0.0	0.0	0.0	0,0,0
3876	6.48e-03	3.72e-03	8.37e-03	172,172,197	0.0	0.0	0.0	0,0,0
3877	6.96e-03	4.13e-03	8.84e-03	172,172,197	0.0	0.0	0.0	0,0,0
3878	8.22e-03	4.94e-03	0.01	176,176,199	0.0	0.0	0.0	0,0,0
3879	8.37e-03	5.21e-03	0.01	176,176,199	0.0	0.0	0.0	0,0,0
3880	6.48e-03	4.03e-03	8.06e-03	172,172,197	0.0	0.0	0.0	0,0,0
3881	6.36e-03	3.86e-03	8.04e-03	172,172,197	0.0	0.0	0.0	0,0,0
3882	6.30e-03	3.75e-03	8.10e-03	172,172,197	0.0	0.0	0.0	0,0,0
3883	8.08e-03	7.02e-03	0.01	176,176,199	0.0	0.0	0.0	0,0,0
3884	9.07e-03	5.51e-03	0.01	176,176,199	0.0	0.0	0.0	0,0,0
3885	9.66e-03	5.83e-03	0.01	176,176,199	0.0	0.0	0.0	0,0,0
3886	9.90e-03	5.68e-03	0.01	176,176,199	0.0	0.0	0.0	0,0,0
3887	9.00e-03	7.07e-03	0.01	172,176,197	0.0	0.0	0.0	0,0,0
3888	8.32e-03	4.27e-03	0.01	172,172,197	0.0	0.0	0.0	0,0,0
3889	0.01	6.56e-03	0.01	176,176,199	0.0	0.0	0.0	0,0,0
3890	0.01	5.90e-03	0.01	176,176,199	0.0	0.0	0.0	0,0,0
3891	0.01	6.33e-03	0.02	176,176,199	0.0	0.0	0.0	0,0,0
3892	0.01	6.39e-03	0.02	172,176,197	0.0	0.0	0.0	0,0,0
3893	0.01	0.02	0.01	172,176,197	0.0	0.0	0.0	0,0,0
3894	0.01	0.02	0.01	172,176,197	0.0	0.0	0.0	0,0,0
3895	9.90e-03	4.75e-03	0.01	172,172,197	0.0	0.0	0.0	0,0,0
3896	8.96e-03	4.39e-03	0.01	172,172,197	0.0	0.0	0.0	0,0,0
3897	8.46e-03	4.20e-03	0.01	176,172,199	0.0	0.0	0.0	0,0,0

3898	8.48e-03	4.24e-03	0.01	176,176,199	0.0	0.0	0.0	0,0,0
3899	7.85e-03	4.01e-03	0.01	172,172,197	0.0	0.0	0.0	0,0,0
3900	7.33e-03	3.84e-03	9.45e-03	172,172,197	0.0	0.0	0.0	0,0,0
3901	7.04e-03	3.68e-03	9.08e-03	172,172,197	0.0	0.0	0.0	0,0,0
3902	6.55e-03	3.50e-03	8.48e-03	172,172,197	0.0	0.0	0.0	0,0,0
3903	6.24e-03	3.42e-03	8.08e-03	172,172,197	0.0	0.0	0.0	0,0,0
3904	6.38e-03	3.52e-03	8.19e-03	176,176,199	0.0	0.0	0.0	0,0,0
3905	5.85e-03	3.34e-03	7.52e-03	172,172,197	0.0	0.0	0.0	0,0,0
3906	5.48e-03	3.23e-03	7.03e-03	172,172,197	0.0	0.0	0.0	0,0,0
3907	5.40e-03	3.55e-03	6.93e-03	176,176,199	0.0	0.0	0.0	0,0,0
3908	4.42e-03	2.64e-03	5.68e-03	176,172,199	0.0	0.0	0.0	0,0,0
3909	4.66e-03	2.83e-03	5.95e-03	176,176,199	0.0	0.0	0.0	0,0,0
3910	5.52e-03	3.33e-03	7.08e-03	172,176,197	0.0	0.0	0.0	0,0,0
3911	5.70e-03	3.32e-03	7.31e-03	172,172,197	0.0	0.0	0.0	0,0,0
3912	5.30e-03	6.37e-03	6.69e-03	176,157,199	0.0	0.0	0.0	0,0,0
3913	5.17e-03	5.47e-03	6.59e-03	176,157,199	0.0	0.0	0.0	0,0,0
3914	5.39e-03	5.09e-03	6.88e-03	176,157,199	0.0	0.0	0.0	0,0,0
3915	5.81e-03	5.93e-03	7.40e-03	176,157,199	0.0	0.0	0.0	0,0,0
3916	6.14e-03	7.42e-03	7.81e-03	176,157,199	0.0	0.0	0.0	0,0,0
3917	7.45e-03	3.91e-03	9.60e-03	172,172,197	0.0	0.0	0.0	0,0,0
3918	6.93e-03	9.08e-03	8.83e-03	176,157,199	0.0	0.0	0.0	0,0,0
3919	6.77e-03	3.38e-03	8.76e-03	176,176,199	0.0	0.0	0.0	0,0,0
3920	7.20e-03	3.51e-03	9.30e-03	176,172,199	0.0	0.0	0.0	0,0,0
3921	8.17e-03	4.43e-03	0.01	172,157,197	0.0	0.0	0.0	0,0,0
3922	0.01	0.02	0.01	172,176,197	0.0	0.0	0.0	0,0,0
3923	8.55e-03	0.01	0.01	176,176,199	0.0	0.0	0.0	0,0,0
3924	8.06e-03	4.27e-03	0.01	172,176,197	0.0	0.0	0.0	0,0,0
3925	7.60e-03	4.08e-03	9.86e-03	172,176,197	0.0	0.0	0.0	0,0,0
3926	7.22e-03	3.74e-03	9.36e-03	176,172,197	0.0	0.0	0.0	0,0,0
3927	7.10e-03	3.79e-03	9.18e-03	176,176,199	0.0	0.0	0.0	0,0,0
3928	6.67e-03	3.57e-03	8.65e-03	172,172,197	0.0	0.0	0.0	0,0,0
3929	6.24e-03	3.43e-03	8.08e-03	172,176,197	0.0	0.0	0.0	0,0,0
3930	6.02e-03	4.20e-03	7.79e-03	172,176,197	0.0	0.0	0.0	0,0,0
3931	5.74e-03	4.15e-03	7.43e-03	172,176,197	0.0	0.0	0.0	0,0,0
3932	5.53e-03	3.63e-03	7.15e-03	172,176,197	0.0	0.0	0.0	0,0,0
3933	5.52e-03	3.38e-03	7.13e-03	176,176,199	0.0	0.0	0.0	0,0,0
3934	5.21e-03	3.06e-03	6.74e-03	172,172,197	0.0	0.0	0.0	0,0,0
3935	4.94e-03	4.03e-03	6.38e-03	172,176,197	0.0	0.0	0.0	0,0,0
3936	4.48e-03	3.57e-03	5.77e-03	176,176,197	0.0	0.0	0.0	0,0,0
3937	4.11e-03	2.70e-03	5.34e-03	172,172,197	0.0	0.0	0.0	0,0,0
3938	4.88e-03	2.97e-03	6.31e-03	172,172,197	0.0	0.0	0.0	0,0,0
3939	5.07e-03	3.34e-03	6.55e-03	172,176,197	0.0	0.0	0.0	0,0,0
3940	5.20e-03	3.07e-03	6.72e-03	172,172,197	0.0	0.0	0.0	0,0,0
3941	4.70e-03	0.01	6.27e-03	157,172,197	0.0	0.0	0.0	0,0,0
3942	4.67e-03	0.01	6.23e-03	157,172,197	0.0	0.0	0.0	0,0,0
3943	4.79e-03	0.01	6.39e-03	157,172,197	0.0	0.0	0.0	0,0,0
3944	5.08e-03	0.01	6.77e-03	157,172,197	0.0	0.0	0.0	0,0,0
3945	5.36e-03	0.02	7.15e-03	157,172,197	0.0	0.0	0.0	0,0,0
3946	6.52e-03	3.55e-03	8.44e-03	172,172,197	0.0	0.0	0.0	0,0,0
3947	6.19e-03	0.02	8.21e-03	172,172,197	0.0	0.0	0.0	0,0,0
3948	6.62e-03	0.01	8.64e-03	172,157,197	0.0	0.0	0.0	0,0,0
3949	7.13e-03	0.01	9.29e-03	172,157,197	0.0	0.0	0.0	0,0,0
3950	7.60e-03	0.01	9.88e-03	172,157,197	0.0	0.0	0.0	0,0,0
3951	8.55e-03	0.01	0.01	176,176,199	0.0	0.0	0.0	0,0,0
3952	5.75e-03	0.01	7.52e-03	176,176,199	0.0	0.0	0.0	0,0,0
3953	5.89e-03	8.03e-03	7.71e-03	172,176,197	0.0	0.0	0.0	0,0,0
3954	6.26e-03	5.77e-03	8.20e-03	172,161,197	0.0	0.0	0.0	0,0,0
3955	6.05e-03	3.42e-03	7.91e-03	172,172,197	0.0	0.0	0.0	0,0,0
3956	6.25e-03	3.63e-03	8.18e-03	172,172,197	0.0	0.0	0.0	0,0,0
3957	5.88e-03	3.35e-03	7.70e-03	172,172,197	0.0	0.0	0.0	0,0,0
3958	6.21e-03	3.63e-03	8.13e-03	172,172,197	0.0	0.0	0.0	0,0,0
3959	5.75e-03	3.30e-03	7.51e-03	172,172,197	0.0	0.0	0.0	0,0,0
3960	6.41e-03	3.72e-03	8.36e-03	176,176,199	0.0	0.0	0.0	0,0,0
3961	5.61e-03	3.23e-03	7.33e-03	172,172,197	0.0	0.0	0.0	0,0,0
3962	6.03e-03	3.50e-03	7.90e-03	172,172,197	0.0	0.0	0.0	0,0,0
3963	5.14e-03	2.98e-03	6.76e-03	172,172,197	0.0	0.0	0.0	0,0,0
3964	5.88e-03	3.44e-03	7.69e-03	172,172,197	0.0	0.0	0.0	0,0,0
3965	5.07e-03	2.93e-03	6.64e-03	172,172,197	0.0	0.0	0.0	0,0,0
3966	5.83e-03	3.43e-03	7.62e-03	172,172,197	0.0	0.0	0.0	0,0,0
3967	4.97e-03	2.89e-03	6.51e-03	172,172,197	0.0	0.0	0.0	0,0,0
3968	5.77e-03	3.41e-03	7.55e-03	172,172,197	0.0	0.0	0.0	0,0,0
3969	4.86e-03	2.89e-03	6.37e-03	172,172,197	0.0	0.0	0.0	0,0,0
3970	5.74e-03	3.40e-03	7.50e-03	172,172,197	0.0	0.0	0.0	0,0,0
3971	4.76e-03	2.96e-03	6.23e-03	172,172,197	0.0	0.0	0.0	0,0,0
3972	5.87e-03	3.45e-03	7.65e-03	176,176,199	0.0	0.0	0.0	0,0,0
3973	4.82e-03	2.94e-03	6.26e-03	172,176,197	0.0	0.0	0.0	0,0,0
3974	5.43e-03	3.20e-03	7.12e-03	172,172,197	0.0	0.0	0.0	0,0,0
3975	5.17e-03	3.08e-03	6.72e-03	172,176,197	0.0	0.0	0.0	0,0,0
3976	5.45e-03	3.21e-03	7.11e-03	172,172,197	0.0	0.0	0.0	0,0,0

3977	5.06e-03	3.01e-03	6.61e-03	172,172,197	0.0	0.0	0.0	0,0,0
3978	5.31e-03	3.06e-03	6.92e-03	172,172,197	0.0	0.0	0.0	0,0,0
3979	5.54e-03	3.26e-03	7.22e-03	172,172,197	0.0	0.0	0.0	0,0,0
3980	5.28e-03	3.06e-03	6.87e-03	172,172,197	0.0	0.0	0.0	0,0,0
3981	5.51e-03	3.28e-03	7.19e-03	172,172,197	0.0	0.0	0.0	0,0,0
3982	4.95e-03	2.98e-03	6.45e-03	172,172,197	0.0	0.0	0.0	0,0,0
3983	5.48e-03	3.27e-03	7.15e-03	172,172,197	0.0	0.0	0.0	0,0,0
3984	4.92e-03	2.92e-03	6.40e-03	172,172,197	0.0	0.0	0.0	0,0,0
3985	5.65e-03	3.35e-03	7.39e-03	172,172,197	0.0	0.0	0.0	0,0,0
3986	4.94e-03	3.04e-03	6.40e-03	172,176,199	0.0	0.0	0.0	0,0,0
3987	6.09e-03	3.61e-03	7.94e-03	176,176,199	0.0	0.0	0.0	0,0,0
3988	5.29e-03	3.14e-03	6.94e-03	172,176,197	0.0	0.0	0.0	0,0,0
3989	5.97e-03	3.59e-03	7.79e-03	172,172,197	0.0	0.0	0.0	0,0,0
3990	5.19e-03	3.08e-03	6.81e-03	172,172,197	0.0	0.0	0.0	0,0,0
3991	6.00e-03	3.59e-03	7.83e-03	172,172,197	0.0	0.0	0.0	0,0,0
3992	5.06e-03	3.02e-03	6.65e-03	172,172,197	0.0	0.0	0.0	0,0,0
3993	6.06e-03	3.60e-03	7.89e-03	172,172,197	0.0	0.0	0.0	0,0,0
3994	5.04e-03	3.00e-03	6.61e-03	172,172,197	0.0	0.0	0.0	0,0,0
3995	6.10e-03	3.61e-03	7.95e-03	172,172,197	0.0	0.0	0.0	0,0,0
3996	5.08e-03	3.02e-03	6.67e-03	172,172,197	0.0	0.0	0.0	0,0,0
3997	6.10e-03	3.58e-03	7.96e-03	172,172,197	0.0	0.0	0.0	0,0,0
3998	5.65e-03	3.28e-03	7.37e-03	172,172,197	0.0	0.0	0.0	0,0,0
3999	6.53e-03	3.81e-03	8.52e-03	172,176,197	0.0	0.0	0.0	0,0,0
4000	5.51e-03	3.20e-03	7.23e-03	172,172,197	0.0	0.0	0.0	0,0,0
4001	6.26e-03	3.71e-03	8.17e-03	172,176,197	0.0	0.0	0.0	0,0,0
4002	6.13e-03	3.51e-03	8.01e-03	172,172,197	0.0	0.0	0.0	0,0,0
4003	6.43e-03	3.75e-03	8.41e-03	172,172,197	0.0	0.0	0.0	0,0,0
4004	6.35e-03	3.61e-03	8.30e-03	172,172,197	0.0	0.0	0.0	0,0,0
4005	6.48e-03	4.31e-03	8.47e-03	172,161,197	0.0	0.0	0.0	0,0,0
4006	6.26e-03	8.34e-03	8.17e-03	172,176,197	0.0	0.0	0.0	0,0,0
4007	5.94e-03	0.01	7.77e-03	176,176,199	0.0	0.0	0.0	0,0,0
4288	0.03	0.03	0.03	176,172,199	0.0	0.0	0.0	0,0,0
4289	0.04	0.03	0.04	176,176,199	0.0	0.0	0.0	0,0,0
4290	0.04	0.02	0.04	176,176,199	0.0	0.0	0.0	0,0,0
4291	0.04	0.02	0.04	176,176,199	0.0	0.0	0.0	0,0,0
4292	0.04	0.03	0.04	176,176,199	0.0	0.0	0.0	0,0,0
4293	0.03	0.03	0.03	176,172,199	0.0	0.0	0.0	0,0,0
4294	0.02	0.02	0.03	176,176,199	0.0	0.0	0.0	0,0,0
4295	0.02	0.02	0.02	176,176,199	0.0	0.0	0.0	0,0,0
4296	0.02	0.03	0.02	176,176,199	0.0	0.0	0.0	0,0,0
4297	0.02	0.02	0.02	176,176,199	0.0	0.0	0.0	0,0,0
4298	0.01	0.02	0.02	176,176,199	0.0	0.0	0.0	0,0,0
4299	0.03	0.03	0.03	176,176,199	0.0	0.0	0.0	0,0,0
4300	0.01	0.02	0.01	176,176,199	0.0	0.0	0.0	0,0,0
4301	0.02	0.03	0.02	176,176,199	0.0	0.0	0.0	0,0,0
4302	0.02	0.03	0.02	176,176,199	0.0	0.0	0.0	0,0,0
4303	0.02	0.02	0.02	176,176,199	0.0	0.0	0.0	0,0,0
4304	0.01	0.01	0.02	176,176,199	0.0	0.0	0.0	0,0,0
4305	0.03	0.02	0.03	176,176,199	0.0	0.0	0.0	0,0,0
4306	0.01	0.02	0.01	176,176,199	0.0	0.0	0.0	0,0,0
4307	0.02	0.02	0.02	176,176,199	0.0	0.0	0.0	0,0,0
4308	0.02	0.03	0.02	176,176,199	0.0	0.0	0.0	0,0,0
4309	0.02	0.02	0.02	176,176,199	0.0	0.0	0.0	0,0,0
4310	0.01	0.02	0.01	176,172,199	0.0	0.0	0.0	0,0,0
4311	0.03	0.02	0.03	176,176,199	0.0	0.0	0.0	0,0,0
4312	0.01	0.01	0.02	176,176,199	0.0	0.0	0.0	0,0,0
4313	0.02	0.02	0.02	176,176,199	0.0	0.0	0.0	0,0,0
4314	0.02	0.03	0.02	176,176,199	0.0	0.0	0.0	0,0,0
4315	0.02	0.03	0.02	176,176,199	0.0	0.0	0.0	0,0,0
4316	0.01	0.02	0.01	176,176,199	0.0	0.0	0.0	0,0,0
4317	0.03	0.03	0.03	176,176,199	0.0	0.0	0.0	0,0,0
4318	0.01	0.02	0.02	176,176,199	0.0	0.0	0.0	0,0,0
4319	0.02	0.02	0.02	176,176,199	0.0	0.0	0.0	0,0,0
4320	0.02	0.03	0.02	176,176,199	0.0	0.0	0.0	0,0,0
4321	0.02	0.02	0.02	176,176,199	0.0	0.0	0.0	0,0,0
4322	0.02	0.02	0.03	176,176,199	0.0	0.0	0.0	0,0,0
4323	0.02	0.03	0.02	176,176,199	0.0	0.0	0.0	0,0,0
4324	0.02	0.03	0.02	176,176,199	0.0	0.0	0.0	0,0,0
4325	0.02	0.03	0.02	176,176,199	0.0	0.0	0.0	0,0,0
4326	0.02	0.03	0.02	176,176,199	0.0	0.0	0.0	0,0,0
4327	0.01	0.01	0.01	176,176,199	0.0	0.0	0.0	0,0,0
4328	0.01	0.02	0.01	176,176,199	0.0	0.0	0.0	0,0,0
4329	0.01	0.02	0.02	176,176,199	0.0	0.0	0.0	0,0,0
4330	0.02	0.03	0.02	176,176,199	0.0	0.0	0.0	0,0,0
4331	0.02	0.03	0.02	176,176,199	0.0	0.0	0.0	0,0,0
4332	0.02	0.03	0.02	176,176,199	0.0	0.0	0.0	0,0,0
4333	0.01	0.01	0.01	176,176,199	0.0	0.0	0.0	0,0,0
4334	9.43e-03	0.01	0.01	176,176,199	0.0	0.0	0.0	0,0,0
4335	0.01	0.02	0.01	176,176,199	0.0	0.0	0.0	0,0,0

4336	0.02	0.03	0.02	176,176,199	0.0	0.0	0.0	0,0,0
4337	0.02	0.03	0.02	176,176,199	0.0	0.0	0.0	0,0,0
4338	0.02	0.03	0.02	176,176,199	0.0	0.0	0.0	0,0,0
4339	0.01	0.01	0.01	176,176,199	0.0	0.0	0.0	0,0,0
4340	9.01e-03	0.01	0.01	176,176,199	0.0	0.0	0.0	0,0,0
4341	0.01	0.01	0.01	176,176,199	0.0	0.0	0.0	0,0,0
4342	0.02	0.03	0.02	176,176,199	0.0	0.0	0.0	0,0,0
4343	0.02	0.03	0.02	176,176,199	0.0	0.0	0.0	0,0,0
4344	0.02	0.03	0.02	176,176,199	0.0	0.0	0.0	0,0,0
4345	0.01	0.02	0.01	176,176,199	0.0	0.0	0.0	0,0,0
4346	0.01	0.02	0.01	176,176,199	0.0	0.0	0.0	0,0,0
4347	0.01	0.01	0.01	176,176,199	0.0	0.0	0.0	0,0,0
4348	0.02	0.02	0.02	176,176,199	0.0	0.0	0.0	0,0,0
4349	0.02	0.03	0.02	176,176,199	0.0	0.0	0.0	0,0,0
4350	0.02	0.03	0.02	176,176,199	0.0	0.0	0.0	0,0,0
4351	0.01	0.03	0.02	176,176,199	0.0	0.0	0.0	0,0,0
4352	0.01	0.03	0.02	176,176,199	0.0	0.0	0.0	0,0,0
4353	0.01	0.02	0.01	172,176,197	0.0	0.0	0.0	0,0,0
4354	0.01	0.03	0.01	176,176,199	0.0	0.0	0.0	0,0,0
4355	9.37e-03	0.02	0.01	176,176,199	0.0	0.0	0.0	0,0,0
4356	7.51e-03	0.02	9.58e-03	176,176,199	0.0	0.0	0.0	0,0,0
4357	6.29e-03	0.01	8.30e-03	172,176,199	0.0	0.0	0.0	0,0,0
4358	7.30e-03	0.02	9.18e-03	172,176,197	0.0	0.0	0.0	0,0,0
4359	8.92e-03	0.02	0.01	176,176,199	0.0	0.0	0.0	0,0,0
4360	8.94e-03	0.02	0.01	176,176,199	0.0	0.0	0.0	0,0,0
4361	7.70e-03	0.02	9.49e-03	176,176,199	0.0	0.0	0.0	0,0,0
4362	5.42e-03	0.02	6.80e-03	176,176,199	0.0	0.0	0.0	0,0,0
4363	3.99e-03	0.01	4.93e-03	176,176,199	0.0	0.0	0.0	0,0,0
4364	5.18e-03	0.02	6.36e-03	172,176,197	0.0	0.0	0.0	0,0,0
4365	6.99e-03	0.02	8.43e-03	176,176,199	0.0	0.0	0.0	0,0,0
4366	6.96e-03	0.02	8.34e-03	176,176,199	0.0	0.0	0.0	0,0,0
4367	5.48e-03	0.02	6.51e-03	176,176,199	0.0	0.0	0.0	0,0,0
4368	4.72e-03	0.01	5.75e-03	172,176,197	0.0	0.0	0.0	0,0,0
4369	3.86e-03	0.01	4.74e-03	176,176,199	0.0	0.0	0.0	0,0,0
4370	4.82e-03	0.02	5.98e-03	176,176,199	0.0	0.0	0.0	0,0,0
4371	7.05e-03	0.02	8.63e-03	176,176,199	0.0	0.0	0.0	0,0,0
4372	8.26e-03	0.02	0.01	176,176,199	0.0	0.0	0.0	0,0,0
4373	8.23e-03	0.02	0.01	176,176,199	0.0	0.0	0.0	0,0,0
4374	6.75e-03	0.02	8.42e-03	172,176,197	0.0	0.0	0.0	0,0,0
4375	5.11e-03	0.01	6.57e-03	172,176,197	0.0	0.0	0.0	0,0,0
4376	6.67e-03	0.02	8.42e-03	176,176,199	0.0	0.0	0.0	0,0,0
4377	8.63e-03	0.02	0.01	176,176,199	0.0	0.0	0.0	0,0,0
4378	9.73e-03	0.02	0.01	176,176,199	0.0	0.0	0.0	0,0,0
4379	0.01	0.02	0.01	172,176,197	0.0	0.0	0.0	0,0,0
4380	0.01	0.03	0.02	176,176,199	0.0	0.0	0.0	0,0,0
4381	7.99e-03	0.02	0.01	176,176,199	0.0	0.0	0.0	0,0,0
4382	5.77e-03	9.13e-03	7.69e-03	157,176,197	0.0	0.0	0.0	0,0,0
4383	4.96e-03	9.01e-03	6.56e-03	172,176,197	0.0	0.0	0.0	0,0,0
4384	4.83e-03	0.01	6.33e-03	172,176,197	0.0	0.0	0.0	0,0,0
4385	5.05e-03	0.01	6.54e-03	176,176,199	0.0	0.0	0.0	0,0,0
4386	4.27e-03	9.76e-03	5.47e-03	172,176,197	0.0	0.0	0.0	0,0,0
4387	3.61e-03	0.01	4.59e-03	172,176,197	0.0	0.0	0.0	0,0,0
4388	3.52e-03	0.01	4.48e-03	172,176,197	0.0	0.0	0.0	0,0,0
4389	3.33e-03	0.01	4.24e-03	172,176,197	0.0	0.0	0.0	0,0,0
4390	3.31e-03	0.01	4.20e-03	172,176,197	0.0	0.0	0.0	0,0,0
4391	3.51e-03	0.01	4.37e-03	176,176,199	0.0	0.0	0.0	0,0,0
4392	2.85e-03	9.38e-03	3.55e-03	172,176,197	0.0	0.0	0.0	0,0,0
4393	2.60e-03	0.01	3.12e-03	176,176,199	0.0	0.0	0.0	0,0,0
4394	2.68e-03	0.01	3.24e-03	176,176,199	0.0	0.0	0.0	0,0,0
4395	2.16e-03	9.50e-03	2.55e-03	176,176,199	0.0	0.0	0.0	0,0,0
4396	2.33e-03	8.01e-03	2.80e-03	176,176,199	0.0	0.0	0.0	0,0,0
4397	2.59e-03	9.19e-03	3.12e-03	176,176,199	0.0	0.0	0.0	0,0,0
4398	2.72e-03	8.98e-03	3.24e-03	172,176,197	0.0	0.0	0.0	0,0,0
4399	3.59e-03	3.62e-03	4.09e-03	176,176,199	0.0	0.0	0.0	0,0,0
4400	3.74e-03	3.82e-03	4.28e-03	176,157,199	0.0	0.0	0.0	0,0,0
4401	3.86e-03	3.97e-03	4.43e-03	176,157,199	0.0	0.0	0.0	0,0,0
4402	3.78e-03	4.08e-03	4.33e-03	176,157,199	0.0	0.0	0.0	0,0,0
4403	3.63e-03	3.89e-03	4.24e-03	176,157,197	0.0	0.0	0.0	0,0,0
4404	3.76e-03	8.20e-03	4.74e-03	172,176,197	0.0	0.0	0.0	0,0,0
4405	4.22e-03	4.44e-03	5.48e-03	172,157,199	0.0	0.0	0.0	0,0,0
4406	4.10e-03	5.80e-03	5.47e-03	161,176,199	0.0	0.0	0.0	0,0,0
4407	4.45e-03	4.13e-03	5.93e-03	157,162,197	0.0	0.0	0.0	0,0,0
4408	6.03e-03	4.91e-03	8.04e-03	157,161,197	0.0	0.0	0.0	0,0,0
4409	7.82e-03	0.02	0.01	176,176,199	0.0	0.0	0.0	0,0,0
4410	5.00e-03	0.01	6.39e-03	176,176,199	0.0	0.0	0.0	0,0,0
4411	3.21e-03	4.70e-03	4.15e-03	172,176,197	0.0	0.0	0.0	0,0,0
4412	3.08e-03	5.54e-03	3.95e-03	172,176,197	0.0	0.0	0.0	0,0,0
4413	2.96e-03	6.64e-03	3.79e-03	176,176,199	0.0	0.0	0.0	0,0,0
4414	2.89e-03	7.38e-03	3.69e-03	172,176,197	0.0	0.0	0.0	0,0,0

4415	2.66e-03	6.66e-03	3.40e-03	172,176,197	0.0	0.0	0.0	0,0,0
4416	2.47e-03	8.69e-03	3.16e-03	172,176,197	0.0	0.0	0.0	0,0,0
4417	2.46e-03	9.46e-03	3.13e-03	176,176,199	0.0	0.0	0.0	0,0,0
4418	2.47e-03	9.46e-03	3.15e-03	176,176,199	0.0	0.0	0.0	0,0,0
4419	2.44e-03	8.81e-03	3.11e-03	176,176,199	0.0	0.0	0.0	0,0,0
4420	2.38e-03	8.27e-03	3.02e-03	176,176,199	0.0	0.0	0.0	0,0,0
4421	2.15e-03	6.69e-03	2.75e-03	172,176,197	0.0	0.0	0.0	0,0,0
4422	2.29e-03	8.04e-03	2.91e-03	176,176,199	0.0	0.0	0.0	0,0,0
4423	2.10e-03	7.19e-03	2.66e-03	172,176,197	0.0	0.0	0.0	0,0,0
4424	2.39e-03	5.98e-03	3.06e-03	172,176,197	0.0	0.0	0.0	0,0,0
4425	2.50e-03	7.03e-03	3.19e-03	176,176,199	0.0	0.0	0.0	0,0,0
4426	2.32e-03	7.50e-03	2.95e-03	176,176,199	0.0	0.0	0.0	0,0,0
4427	2.37e-03	7.10e-03	3.04e-03	172,176,197	0.0	0.0	0.0	0,0,0
4428	2.74e-03	5.94e-03	3.51e-03	172,176,197	0.0	0.0	0.0	0,0,0
4429	3.33e-03	8.40e-03	4.27e-03	172,157,197	0.0	0.0	0.0	0,0,0
4430	3.46e-03	8.76e-03	4.46e-03	172,157,197	0.0	0.0	0.0	0,0,0
4431	3.53e-03	0.01	4.56e-03	172,157,197	0.0	0.0	0.0	0,0,0
4432	5.13e-03	0.01	6.54e-03	176,176,199	0.0	0.0	0.0	0,0,0
4433	3.66e-03	0.01	4.67e-03	176,161,199	0.0	0.0	0.0	0,0,0
4434	3.46e-03	3.19e-03	4.49e-03	172,161,197	0.0	0.0	0.0	0,0,0
4435	3.70e-03	5.81e-03	4.70e-03	176,161,199	0.0	0.0	0.0	0,0,0
4436	3.71e-03	2.22e-03	4.86e-03	172,172,197	0.0	0.0	0.0	0,0,0
4437	3.88e-03	2.37e-03	4.87e-03	176,176,199	0.0	0.0	0.0	0,0,0
4438	3.86e-03	2.33e-03	5.04e-03	172,172,197	0.0	0.0	0.0	0,0,0
4439	3.92e-03	2.44e-03	5.09e-03	176,176,199	0.0	0.0	0.0	0,0,0
4440	4.05e-03	2.38e-03	5.29e-03	176,172,199	0.0	0.0	0.0	0,0,0
4441	4.05e-03	2.52e-03	5.26e-03	176,176,199	0.0	0.0	0.0	0,0,0
4442	4.17e-03	2.45e-03	5.44e-03	176,176,199	0.0	0.0	0.0	0,0,0
4443	3.88e-03	2.42e-03	5.08e-03	172,172,197	0.0	0.0	0.0	0,0,0
4444	4.05e-03	2.41e-03	5.31e-03	172,172,197	0.0	0.0	0.0	0,0,0
4445	3.97e-03	2.47e-03	5.19e-03	176,176,199	0.0	0.0	0.0	0,0,0
4446	4.12e-03	2.48e-03	5.39e-03	172,172,197	0.0	0.0	0.0	0,0,0
4447	4.17e-03	2.59e-03	5.44e-03	176,176,199	0.0	0.0	0.0	0,0,0
4448	4.23e-03	2.58e-03	5.52e-03	172,172,197	0.0	0.0	0.0	0,0,0
4449	4.37e-03	2.72e-03	5.70e-03	176,176,199	0.0	0.0	0.0	0,0,0
4450	4.37e-03	2.67e-03	5.71e-03	176,176,199	0.0	0.0	0.0	0,0,0
4451	4.58e-03	2.84e-03	5.96e-03	176,176,199	0.0	0.0	0.0	0,0,0
4452	4.60e-03	2.81e-03	6.00e-03	176,176,199	0.0	0.0	0.0	0,0,0
4453	4.77e-03	2.92e-03	6.21e-03	176,176,199	0.0	0.0	0.0	0,0,0
4454	4.81e-03	2.92e-03	6.26e-03	176,176,199	0.0	0.0	0.0	0,0,0
4455	4.87e-03	2.96e-03	6.34e-03	176,176,199	0.0	0.0	0.0	0,0,0
4456	4.92e-03	3.00e-03	6.40e-03	176,176,199	0.0	0.0	0.0	0,0,0
4457	4.67e-03	2.91e-03	6.11e-03	176,176,197	0.0	0.0	0.0	0,0,0
4458	4.69e-03	2.92e-03	6.11e-03	176,176,199	0.0	0.0	0.0	0,0,0
4459	4.70e-03	2.87e-03	6.18e-03	172,176,197	0.0	0.0	0.0	0,0,0
4460	4.70e-03	2.93e-03	6.13e-03	176,176,199	0.0	0.0	0.0	0,0,0
4461	4.79e-03	2.89e-03	6.30e-03	172,172,197	0.0	0.0	0.0	0,0,0
4462	4.71e-03	2.93e-03	6.14e-03	176,176,199	0.0	0.0	0.0	0,0,0
4463	4.84e-03	2.95e-03	6.30e-03	176,176,199	0.0	0.0	0.0	0,0,0
4464	4.83e-03	2.95e-03	6.29e-03	176,176,199	0.0	0.0	0.0	0,0,0
4465	4.85e-03	2.95e-03	6.30e-03	176,176,199	0.0	0.0	0.0	0,0,0
4466	4.84e-03	2.95e-03	6.30e-03	176,176,199	0.0	0.0	0.0	0,0,0
4467	4.81e-03	2.93e-03	6.26e-03	176,176,199	0.0	0.0	0.0	0,0,0
4468	5.16e-03	3.14e-03	6.74e-03	176,176,199	0.0	0.0	0.0	0,0,0
4469	5.30e-03	3.16e-03	6.89e-03	172,172,197	0.0	0.0	0.0	0,0,0
4470	5.19e-03	3.10e-03	6.64e-03	176,176,197	0.0	0.0	0.0	0,0,0
4471	5.22e-03	3.12e-03	6.80e-03	172,172,197	0.0	0.0	0.0	0,0,0
4472	5.29e-03	2.95e-03	6.42e-03	176,176,199	0.0	0.0	0.0	0,0,0
4473	5.19e-03	3.04e-03	6.63e-03	176,176,197	0.0	0.0	0.0	0,0,0
4474	5.10e-03	2.83e-03	6.17e-03	176,176,199	0.0	0.0	0.0	0,0,0
4475	5.09e-03	3.00e-03	6.62e-03	172,172,197	0.0	0.0	0.0	0,0,0
4476	4.77e-03	2.73e-03	5.89e-03	176,172,197	0.0	0.0	0.0	0,0,0
4477	5.15e-03	3.00e-03	6.70e-03	172,172,197	0.0	0.0	0.0	0,0,0
4478	4.29e-03	2.62e-03	5.67e-03	172,172,197	0.0	0.0	0.0	0,0,0
4479	4.23e-03	2.52e-03	5.52e-03	176,172,199	0.0	0.0	0.0	0,0,0
4480	4.74e-03	2.72e-03	5.80e-03	176,176,199	0.0	0.0	0.0	0,0,0
4481	5.42e-03	3.12e-03	7.02e-03	172,172,197	0.0	0.0	0.0	0,0,0
4482	4.39e-03	2.65e-03	5.78e-03	172,176,197	0.0	0.0	0.0	0,0,0
4483	4.21e-03	2.57e-03	5.55e-03	172,172,197	0.0	0.0	0.0	0,0,0
4484	4.05e-03	2.47e-03	5.36e-03	181,181,197	0.0	0.0	0.0	0,0,0
4485	4.07e-03	2.48e-03	5.38e-03	172,172,197	0.0	0.0	0.0	0,0,0
4486	3.97e-03	5.94e-03	5.23e-03	172,161,197	0.0	0.0	0.0	0,0,0
4487	3.95e-03	3.68e-03	5.22e-03	172,161,197	0.0	0.0	0.0	0,0,0
4488	3.75e-03	0.01	4.78e-03	176,161,199	0.0	0.0	0.0	0,0,0
4605	0.17	0.19	0.21	176,176,199	0.0	0.0	0.0	0,0,0
4606	0.13	0.28	0.15	176,176,199	0.0	0.0	0.0	0,0,0
4607	0.12	0.26	0.14	176,176,199	0.0	0.0	0.0	0,0,0
4608	0.11	0.26	0.13	176,176,199	0.0	0.0	0.0	0,0,0
4609	0.13	0.28	0.15	176,176,199	0.0	0.0	0.0	0,0,0

4610	0.17	0.19	0.20	176,176,199	0.0	0.0	0.0	0,0,0
4611	0.05	0.19	0.06	176,176,199	0.0	0.0	0.0	0,0,0
4612	0.03	0.16	0.04	176,176,199	0.0	0.0	0.0	0,0,0
4613	0.04	0.19	0.05	176,176,199	0.0	0.0	0.0	0,0,0
4614	0.03	0.18	0.04	176,176,199	0.0	0.0	0.0	0,0,0
4615	0.02	0.12	0.02	176,176,199	0.0	0.0	0.0	0,0,0
4616	0.05	0.29	0.05	176,176,199	0.0	0.0	0.0	0,0,0
4617	0.03	0.13	0.03	176,176,199	0.0	0.0	0.0	0,0,0
4618	0.04	0.19	0.05	176,176,199	0.0	0.0	0.0	0,0,0
4619	0.04	0.21	0.05	176,176,199	0.0	0.0	0.0	0,0,0
4620	0.04	0.18	0.04	176,176,199	0.0	0.0	0.0	0,0,0
4621	0.02	0.11	0.03	176,176,199	0.0	0.0	0.0	0,0,0
4622	0.04	0.27	0.05	176,176,199	0.0	0.0	0.0	0,0,0
4623	0.03	0.12	0.03	176,176,199	0.0	0.0	0.0	0,0,0
4624	0.04	0.18	0.04	176,176,199	0.0	0.0	0.0	0,0,0
4625	0.04	0.20	0.05	176,176,199	0.0	0.0	0.0	0,0,0
4626	0.04	0.18	0.04	176,176,199	0.0	0.0	0.0	0,0,0
4627	0.03	0.12	0.03	176,176,199	0.0	0.0	0.0	0,0,0
4628	0.04	0.27	0.05	176,176,199	0.0	0.0	0.0	0,0,0
4629	0.02	0.12	0.03	176,176,199	0.0	0.0	0.0	0,0,0
4630	0.04	0.18	0.04	176,176,199	0.0	0.0	0.0	0,0,0
4631	0.04	0.21	0.05	176,176,199	0.0	0.0	0.0	0,0,0
4632	0.04	0.19	0.05	176,176,199	0.0	0.0	0.0	0,0,0
4633	0.03	0.13	0.03	176,176,199	0.0	0.0	0.0	0,0,0
4634	0.05	0.29	0.05	176,176,199	0.0	0.0	0.0	0,0,0
4635	0.02	0.11	0.02	176,176,199	0.0	0.0	0.0	0,0,0
4636	0.03	0.18	0.04	176,176,199	0.0	0.0	0.0	0,0,0
4637	0.04	0.19	0.05	176,176,199	0.0	0.0	0.0	0,0,0
4638	0.03	0.16	0.04	176,176,199	0.0	0.0	0.0	0,0,0
4639	0.05	0.19	0.06	176,176,199	0.0	0.0	0.0	0,0,0
4640	0.04	0.07	0.05	176,176,199	0.0	0.0	0.0	0,0,0
4641	0.05	0.12	0.06	176,176,199	0.0	0.0	0.0	0,0,0
4642	0.05	0.15	0.06	176,176,199	0.0	0.0	0.0	0,0,0
4643	0.04	0.14	0.05	176,176,199	0.0	0.0	0.0	0,0,0
4644	0.03	0.09	0.03	176,176,199	0.0	0.0	0.0	0,0,0
4645	0.01	0.05	0.01	172,176,199	0.0	0.0	0.0	0,0,0
4646	0.04	0.10	0.04	176,176,199	0.0	0.0	0.0	0,0,0
4647	0.05	0.15	0.06	176,176,199	0.0	0.0	0.0	0,0,0
4648	0.06	0.17	0.07	176,176,199	0.0	0.0	0.0	0,0,0
4649	0.05	0.15	0.06	176,176,199	0.0	0.0	0.0	0,0,0
4650	0.03	0.09	0.04	176,176,199	0.0	0.0	0.0	0,0,0
4651	8.11e-03	0.05	9.87e-03	172,176,197	0.0	0.0	0.0	0,0,0
4652	0.03	0.09	0.04	176,176,199	0.0	0.0	0.0	0,0,0
4653	0.05	0.14	0.06	176,176,199	0.0	0.0	0.0	0,0,0
4654	0.05	0.16	0.06	176,176,199	0.0	0.0	0.0	0,0,0
4655	0.05	0.14	0.06	176,176,199	0.0	0.0	0.0	0,0,0
4656	0.03	0.09	0.04	176,176,199	0.0	0.0	0.0	0,0,0
4657	7.71e-03	0.05	9.31e-03	172,176,197	0.0	0.0	0.0	0,0,0
4658	0.03	0.09	0.04	176,176,199	0.0	0.0	0.0	0,0,0
4659	0.05	0.14	0.06	176,176,199	0.0	0.0	0.0	0,0,0
4660	0.06	0.17	0.07	176,176,199	0.0	0.0	0.0	0,0,0
4661	0.05	0.15	0.06	176,176,199	0.0	0.0	0.0	0,0,0
4662	0.04	0.10	0.04	176,176,199	0.0	0.0	0.0	0,0,0
4663	0.01	0.05	0.01	172,176,197	0.0	0.0	0.0	0,0,0
4664	0.03	0.09	0.03	176,176,199	0.0	0.0	0.0	0,0,0
4665	0.04	0.14	0.05	176,176,199	0.0	0.0	0.0	0,0,0
4666	0.05	0.15	0.06	176,176,199	0.0	0.0	0.0	0,0,0
4667	0.05	0.12	0.05	176,176,199	0.0	0.0	0.0	0,0,0
4668	0.04	0.07	0.05	176,176,199	0.0	0.0	0.0	0,0,0
4669	0.01	0.03	0.02	176,176,199	0.0	0.0	0.0	0,0,0
4670	9.96e-03	0.02	0.01	157,176,197	0.0	0.0	0.0	0,0,0
4671	8.25e-03	0.03	0.01	157,176,197	0.0	0.0	0.0	0,0,0
4672	8.47e-03	0.03	0.01	172,176,197	0.0	0.0	0.0	0,0,0
4673	8.19e-03	0.02	0.01	176,176,199	0.0	0.0	0.0	0,0,0
4674	6.47e-03	0.02	8.56e-03	176,176,199	0.0	0.0	0.0	0,0,0
4675	5.89e-03	0.02	7.86e-03	157,176,197	0.0	0.0	0.0	0,0,0
4676	4.75e-03	0.03	6.33e-03	157,176,197	0.0	0.0	0.0	0,0,0
4677	4.75e-03	0.04	5.80e-03	176,176,199	0.0	0.0	0.0	0,0,0
4678	4.59e-03	0.03	6.12e-03	157,176,197	0.0	0.0	0.0	0,0,0
4679	4.51e-03	0.02	5.47e-03	176,176,199	0.0	0.0	0.0	0,0,0
4680	3.74e-03	0.02	4.55e-03	172,176,197	0.0	0.0	0.0	0,0,0
4681	3.29e-03	0.02	3.92e-03	176,176,199	0.0	0.0	0.0	0,0,0
4682	4.10e-03	0.03	4.74e-03	176,176,199	0.0	0.0	0.0	0,0,0
4683	4.57e-03	0.03	5.29e-03	176,176,199	0.0	0.0	0.0	0,0,0
4684	4.12e-03	0.03	4.79e-03	176,176,199	0.0	0.0	0.0	0,0,0
4685	3.10e-03	0.02	3.53e-03	176,176,199	0.0	0.0	0.0	0,0,0
4686	3.63e-03	0.02	4.39e-03	176,176,199	0.0	0.0	0.0	0,0,0
4687	4.32e-03	0.02	5.21e-03	176,176,199	0.0	0.0	0.0	0,0,0
4688	4.11e-03	0.03	4.89e-03	176,176,199	0.0	0.0	0.0	0,0,0

4689	4.65e-03	0.03	5.39e-03	176,176,199	0.0	0.0	0.0	0,0,0
4690	4.21e-03	0.03	4.88e-03	176,176,199	0.0	0.0	0.0	0,0,0
4691	4.47e-03	0.02	5.96e-03	157,176,197	0.0	0.0	0.0	0,0,0
4692	4.81e-03	0.02	6.34e-03	176,176,199	0.0	0.0	0.0	0,0,0
4693	6.31e-03	0.02	8.26e-03	176,176,199	0.0	0.0	0.0	0,0,0
4694	6.85e-03	0.03	9.06e-03	172,176,197	0.0	0.0	0.0	0,0,0
4695	6.67e-03	0.03	8.89e-03	157,176,197	0.0	0.0	0.0	0,0,0
4696	8.69e-03	0.02	0.01	157,176,197	0.0	0.0	0.0	0,0,0
4697	0.01	0.03	0.02	176,176,199	0.0	0.0	0.0	0,0,0
4698	6.08e-03	0.02	7.66e-03	172,176,197	0.0	0.0	0.0	0,0,0
4699	4.58e-03	5.75e-03	6.00e-03	172,176,197	0.0	0.0	0.0	0,0,0
4700	4.19e-03	8.65e-03	5.34e-03	176,176,197	0.0	0.0	0.0	0,0,0
4701	4.37e-03	1.00e-02	5.50e-03	176,176,199	0.0	0.0	0.0	0,0,0
4702	4.91e-03	9.70e-03	6.05e-03	176,176,199	0.0	0.0	0.0	0,0,0
4703	4.38e-03	0.01	5.43e-03	172,176,197	0.0	0.0	0.0	0,0,0
4704	3.81e-03	9.63e-03	4.70e-03	176,176,199	0.0	0.0	0.0	0,0,0
4705	3.52e-03	0.01	4.32e-03	176,176,199	0.0	0.0	0.0	0,0,0
4706	3.46e-03	0.02	4.23e-03	176,176,199	0.0	0.0	0.0	0,0,0
4707	3.52e-03	0.01	4.29e-03	176,176,199	0.0	0.0	0.0	0,0,0
4708	3.92e-03	0.01	4.73e-03	176,176,199	0.0	0.0	0.0	0,0,0
4709	3.30e-03	0.01	3.99e-03	172,176,197	0.0	0.0	0.0	0,0,0
4710	2.71e-03	9.58e-03	3.35e-03	183,176,199	0.0	0.0	0.0	0,0,0
4711	2.67e-03	0.01	3.18e-03	176,176,199	0.0	0.0	0.0	0,0,0
4712	2.55e-03	0.01	3.02e-03	176,176,199	0.0	0.0	0.0	0,0,0
4713	2.32e-03	8.89e-03	2.73e-03	176,176,199	0.0	0.0	0.0	0,0,0
4714	2.46e-03	6.95e-03	2.87e-03	176,176,199	0.0	0.0	0.0	0,0,0
4715	3.16e-03	0.01	3.80e-03	172,176,197	0.0	0.0	0.0	0,0,0
4716	3.76e-03	0.01	4.52e-03	176,176,199	0.0	0.0	0.0	0,0,0
4717	3.43e-03	0.02	4.18e-03	176,176,199	0.0	0.0	0.0	0,0,0
4718	3.31e-03	0.02	4.05e-03	176,176,199	0.0	0.0	0.0	0,0,0
4719	3.37e-03	0.02	4.13e-03	176,176,199	0.0	0.0	0.0	0,0,0
4720	3.74e-03	0.01	4.61e-03	172,176,197	0.0	0.0	0.0	0,0,0
4721	4.03e-03	9.71e-03	4.97e-03	172,176,197	0.0	0.0	0.0	0,0,0
4722	4.66e-03	0.01	5.73e-03	176,176,199	0.0	0.0	0.0	0,0,0
4723	3.91e-03	8.55e-03	4.85e-03	176,176,199	0.0	0.0	0.0	0,0,0
4724	3.69e-03	7.18e-03	4.61e-03	176,176,199	0.0	0.0	0.0	0,0,0
4725	4.18e-03	4.60e-03	5.40e-03	172,176,197	0.0	0.0	0.0	0,0,0
4726	5.97e-03	0.02	7.50e-03	172,176,197	0.0	0.0	0.0	0,0,0
4727	3.88e-03	0.01	4.90e-03	176,176,199	0.0	0.0	0.0	0,0,0
4728	3.20e-03	3.27e-03	3.99e-03	176,157,199	0.0	0.0	0.0	0,0,0
4729	3.02e-03	3.73e-03	3.75e-03	176,157,197	0.0	0.0	0.0	0,0,0
4730	2.98e-03	3.90e-03	3.68e-03	176,176,199	0.0	0.0	0.0	0,0,0
4731	3.05e-03	4.01e-03	3.74e-03	176,176,199	0.0	0.0	0.0	0,0,0
4732	2.77e-03	5.64e-03	3.43e-03	172,161,197	0.0	0.0	0.0	0,0,0
4733	2.53e-03	4.33e-03	3.09e-03	172,176,197	0.0	0.0	0.0	0,0,0
4734	2.49e-03	5.12e-03	3.03e-03	176,176,199	0.0	0.0	0.0	0,0,0
4735	2.45e-03	5.28e-03	2.99e-03	176,176,199	0.0	0.0	0.0	0,0,0
4736	2.41e-03	4.79e-03	2.93e-03	176,161,199	0.0	0.0	0.0	0,0,0
4737	2.47e-03	4.29e-03	3.00e-03	176,161,199	0.0	0.0	0.0	0,0,0
4738	2.23e-03	5.49e-03	2.73e-03	172,161,197	0.0	0.0	0.0	0,0,0
4739	1.98e-03	3.43e-03	2.38e-03	172,176,197	0.0	0.0	0.0	0,0,0
4740	1.92e-03	3.19e-03	2.30e-03	176,161,199	0.0	0.0	0.0	0,0,0
4741	1.80e-03	3.02e-03	2.17e-03	172,161,197	0.0	0.0	0.0	0,0,0
4742	1.94e-03	4.14e-03	2.37e-03	172,161,197	0.0	0.0	0.0	0,0,0
4743	2.04e-03	4.15e-03	2.48e-03	172,157,197	0.0	0.0	0.0	0,0,0
4744	2.24e-03	4.91e-03	2.74e-03	172,161,197	0.0	0.0	0.0	0,0,0
4745	1.63e-03	0.02	1.89e-03	176,157,199	0.0	0.0	0.0	0,0,0
4746	1.72e-03	0.02	2.00e-03	176,176,199	0.0	0.0	0.0	0,0,0
4747	1.77e-03	0.02	2.05e-03	176,176,199	0.0	0.0	0.0	0,0,0
4748	1.74e-03	0.02	2.02e-03	176,157,199	0.0	0.0	0.0	0,0,0
4749	1.73e-03	0.02	2.05e-03	176,157,199	0.0	0.0	0.0	0,0,0
4750	2.76e-03	5.41e-03	3.44e-03	172,161,197	0.0	0.0	0.0	0,0,0
4751	1.99e-03	0.02	2.49e-03	176,157,197	0.0	0.0	0.0	0,0,0
4752	2.86e-03	4.31e-03	3.59e-03	172,157,197	0.0	0.0	0.0	0,0,0
4753	2.90e-03	4.66e-03	3.64e-03	172,157,197	0.0	0.0	0.0	0,0,0
4754	3.10e-03	4.80e-03	3.91e-03	172,157,197	0.0	0.0	0.0	0,0,0
4755	3.87e-03	0.01	4.87e-03	176,176,199	0.0	0.0	0.0	0,0,0
4756	2.81e-03	5.47e-03	3.59e-03	172,161,197	0.0	0.0	0.0	0,0,0
4757	3.11e-03	1.78e-03	4.06e-03	172,172,197	0.0	0.0	0.0	0,0,0
4758	3.15e-03	1.90e-03	4.04e-03	176,176,199	0.0	0.0	0.0	0,0,0
4759	3.46e-03	1.98e-03	4.52e-03	172,172,197	0.0	0.0	0.0	0,0,0
4760	3.31e-03	2.01e-03	4.26e-03	176,176,199	0.0	0.0	0.0	0,0,0
4761	3.73e-03	2.16e-03	4.88e-03	176,176,199	0.0	0.0	0.0	0,0,0
4762	3.52e-03	2.19e-03	4.55e-03	176,176,199	0.0	0.0	0.0	0,0,0
4763	4.13e-03	2.42e-03	5.37e-03	176,176,199	0.0	0.0	0.0	0,0,0
4764	4.00e-03	2.43e-03	5.13e-03	176,176,199	0.0	0.0	0.0	0,0,0
4765	4.35e-03	2.60e-03	5.66e-03	176,176,199	0.0	0.0	0.0	0,0,0
4766	4.23e-03	2.57e-03	5.45e-03	176,176,199	0.0	0.0	0.0	0,0,0
4767	4.41e-03	2.65e-03	5.73e-03	176,176,199	0.0	0.0	0.0	0,0,0

4768	4.51e-03	2.73e-03	5.81e-03	176,176,199	0.0	0.0	0.0	0,0,0
4769	4.56e-03	2.77e-03	5.92e-03	176,176,199	0.0	0.0	0.0	0,0,0
4770	4.76e-03	2.89e-03	6.14e-03	176,176,199	0.0	0.0	0.0	0,0,0
4771	4.78e-03	2.89e-03	6.17e-03	176,176,199	0.0	0.0	0.0	0,0,0
4772	5.00e-03	3.03e-03	6.44e-03	176,176,199	0.0	0.0	0.0	0,0,0
4773	4.98e-03	2.98e-03	6.42e-03	176,176,199	0.0	0.0	0.0	0,0,0
4774	5.19e-03	3.15e-03	6.69e-03	176,176,199	0.0	0.0	0.0	0,0,0
4775	5.16e-03	3.10e-03	6.66e-03	176,176,199	0.0	0.0	0.0	0,0,0
4776	5.34e-03	3.24e-03	6.88e-03	176,176,199	0.0	0.0	0.0	0,0,0
4777	5.30e-03	3.20e-03	6.84e-03	176,176,199	0.0	0.0	0.0	0,0,0
4778	5.33e-03	3.24e-03	6.88e-03	176,176,199	0.0	0.0	0.0	0,0,0
4779	5.48e-03	3.30e-03	7.06e-03	176,176,199	0.0	0.0	0.0	0,0,0
4780	5.38e-03	3.26e-03	6.94e-03	176,176,199	0.0	0.0	0.0	0,0,0
4781	5.45e-03	3.29e-03	7.03e-03	176,176,199	0.0	0.0	0.0	0,0,0
4782	5.36e-03	3.24e-03	6.91e-03	176,176,199	0.0	0.0	0.0	0,0,0
4783	5.46e-03	3.30e-03	7.03e-03	176,176,199	0.0	0.0	0.0	0,0,0
4784	5.33e-03	3.23e-03	6.88e-03	176,176,199	0.0	0.0	0.0	0,0,0
4785	5.44e-03	3.29e-03	7.02e-03	176,176,199	0.0	0.0	0.0	0,0,0
4786	5.34e-03	3.23e-03	6.88e-03	176,176,199	0.0	0.0	0.0	0,0,0
4787	5.41e-03	3.27e-03	6.97e-03	176,176,199	0.0	0.0	0.0	0,0,0
4788	5.33e-03	3.22e-03	6.86e-03	176,176,199	0.0	0.0	0.0	0,0,0
4789	5.36e-03	3.25e-03	6.91e-03	176,176,199	0.0	0.0	0.0	0,0,0
4790	5.18e-03	3.16e-03	6.68e-03	176,176,199	0.0	0.0	0.0	0,0,0
4791	5.17e-03	3.10e-03	6.70e-03	176,176,199	0.0	0.0	0.0	0,0,0
4792	5.14e-03	3.20e-03	6.68e-03	176,176,199	0.0	0.0	0.0	0,0,0
4793	5.07e-03	3.03e-03	6.56e-03	176,176,199	0.0	0.0	0.0	0,0,0
4794	4.99e-03	3.11e-03	6.49e-03	176,176,199	0.0	0.0	0.0	0,0,0
4795	4.90e-03	2.92e-03	6.34e-03	176,176,199	0.0	0.0	0.0	0,0,0
4796	4.77e-03	2.97e-03	6.25e-03	176,176,197	0.0	0.0	0.0	0,0,0
4797	4.67e-03	2.78e-03	6.04e-03	176,176,199	0.0	0.0	0.0	0,0,0
4798	4.72e-03	2.84e-03	6.21e-03	172,176,197	0.0	0.0	0.0	0,0,0
4799	4.36e-03	2.64e-03	5.68e-03	176,176,197	0.0	0.0	0.0	0,0,0
4800	4.79e-03	2.80e-03	6.30e-03	172,172,197	0.0	0.0	0.0	0,0,0
4801	4.28e-03	2.62e-03	5.52e-03	176,176,199	0.0	0.0	0.0	0,0,0
4802	4.32e-03	2.60e-03	5.62e-03	176,176,199	0.0	0.0	0.0	0,0,0
4803	4.12e-03	2.51e-03	5.39e-03	176,176,199	0.0	0.0	0.0	0,0,0
4804	5.04e-03	2.86e-03	6.58e-03	172,172,197	0.0	0.0	0.0	0,0,0
4805	3.66e-03	2.28e-03	4.72e-03	176,176,199	0.0	0.0	0.0	0,0,0
4806	3.86e-03	2.26e-03	5.03e-03	176,176,199	0.0	0.0	0.0	0,0,0
4807	3.30e-03	2.05e-03	4.27e-03	176,176,199	0.0	0.0	0.0	0,0,0
4808	3.64e-03	2.11e-03	4.75e-03	172,172,197	0.0	0.0	0.0	0,0,0
4809	3.09e-03	1.92e-03	3.99e-03	176,176,199	0.0	0.0	0.0	0,0,0
4810	3.30e-03	1.94e-03	4.30e-03	172,172,197	0.0	0.0	0.0	0,0,0
4811	2.89e-03	6.04e-03	3.69e-03	172,161,199	0.0	0.0	0.0	0,0,0
4986	0.29	0.12	0.35	176,176,199	9.15e-03	0.0	0.0	176,0,0
4987	0.27	0.16	0.31	176,176,199	0.0	0.0	0.0	0,0,0
4988	0.24	0.15	0.28	176,176,199	0.0	0.0	0.0	0,0,0
4989	0.24	0.15	0.28	176,176,199	0.0	0.0	0.0	0,0,0
4990	0.26	0.16	0.31	176,176,199	0.0	0.0	0.0	0,0,0
4991	0.29	0.12	0.34	176,176,199	0.0	0.0	0.0	0,0,0
5108	0.08	0.13	0.10	176,176,199	0.0	0.0	0.0	0,0,0
5109	0.08	0.23	0.10	176,176,199	0.0	0.0	0.0	0,0,0
5110	0.09	0.33	0.11	176,176,199	0.0	0.0	0.0	0,0,0
5111	0.07	0.31	0.09	176,176,199	0.0	0.0	0.0	0,0,0
5112	0.04	0.20	0.05	176,176,199	0.0	0.0	0.0	0,0,0
5113	0.02	0.06	0.03	176,176,199	0.0	0.0	0.0	0,0,0
5114	0.07	0.20	0.08	176,176,199	0.0	0.0	0.0	0,0,0
5115	0.09	0.32	0.11	176,176,199	0.0	0.0	0.0	0,0,0
5116	0.09	0.38	0.11	176,176,199	0.0	0.0	0.0	0,0,0
5117	0.07	0.34	0.08	176,176,199	0.0	0.0	0.0	0,0,0
5118	0.05	0.21	0.05	176,176,199	0.0	0.0	0.0	0,0,0
5119	8.00e-03	0.06	0.01	176,176,199	0.0	0.0	0.0	0,0,0
5120	0.06	0.20	0.07	176,176,199	0.0	0.0	0.0	0,0,0
5121	0.08	0.32	0.09	176,176,199	0.0	0.0	0.0	0,0,0
5122	0.08	0.36	0.09	176,176,199	0.0	0.0	0.0	0,0,0
5123	0.08	0.32	0.09	176,176,199	0.0	0.0	0.0	0,0,0
5124	0.05	0.20	0.06	176,176,199	0.0	0.0	0.0	0,0,0
5125	5.44e-03	0.06	6.85e-03	172,176,197	0.0	0.0	0.0	0,0,0
5126	0.05	0.21	0.06	176,176,199	0.0	0.0	0.0	0,0,0
5127	0.07	0.33	0.09	176,176,199	0.0	0.0	0.0	0,0,0
5128	0.09	0.38	0.10	176,176,199	0.0	0.0	0.0	0,0,0
5129	0.09	0.33	0.10	176,176,199	0.0	0.0	0.0	0,0,0
5130	0.06	0.20	0.07	176,176,199	0.0	0.0	0.0	0,0,0
5131	0.02	0.06	0.02	176,176,199	0.0	0.0	0.0	0,0,0
5132	0.04	0.20	0.05	176,176,199	0.0	0.0	0.0	0,0,0
5133	0.07	0.31	0.08	176,176,199	0.0	0.0	0.0	0,0,0
5134	0.09	0.32	0.10	176,176,199	0.0	0.0	0.0	0,0,0
5135	0.08	0.23	0.10	176,176,199	0.0	0.0	0.0	0,0,0
5136	0.08	0.13	0.10	176,176,199	0.0	0.0	0.0	0,0,0

5137	0.02	0.04	0.03	176,176,199	0.0	0.0	0.0	0,0,0
5138	0.01	0.05	0.02	157,176,197	0.0	0.0	0.0	0,0,0
5139	0.01	0.07	0.02	161,176,199	0.0	0.0	0.0	0,0,0
5140	0.01	0.06	0.02	176,176,199	0.0	0.0	0.0	0,0,0
5141	0.01	0.05	0.02	176,176,199	0.0	0.0	0.0	0,0,0
5142	0.01	0.03	0.01	176,176,199	0.0	0.0	0.0	0,0,0
5143	6.55e-03	0.04	8.71e-03	172,176,197	0.0	0.0	0.0	0,0,0
5144	6.62e-03	0.06	8.83e-03	161,176,199	0.0	0.0	0.0	0,0,0
5145	6.97e-03	0.07	9.23e-03	172,176,197	0.0	0.0	0.0	0,0,0
5146	7.41e-03	0.07	9.60e-03	176,176,199	0.0	0.0	0.0	0,0,0
5147	6.57e-03	0.04	8.37e-03	176,176,199	0.0	0.0	0.0	0,0,0
5148	4.42e-03	0.03	5.36e-03	172,176,197	0.0	0.0	0.0	0,0,0
5149	4.58e-03	0.04	5.38e-03	176,176,199	0.0	0.0	0.0	0,0,0
5150	5.23e-03	0.06	6.21e-03	176,176,199	0.0	0.0	0.0	0,0,0
5151	5.37e-03	0.07	6.43e-03	176,176,199	0.0	0.0	0.0	0,0,0
5152	5.05e-03	0.06	5.94e-03	176,176,199	0.0	0.0	0.0	0,0,0
5153	4.30e-03	0.04	5.03e-03	176,176,199	0.0	0.0	0.0	0,0,0
5154	4.24e-03	0.02	5.10e-03	172,176,197	0.0	0.0	0.0	0,0,0
5155	5.76e-03	0.04	6.88e-03	176,176,199	0.0	0.0	0.0	0,0,0
5156	5.97e-03	0.06	7.18e-03	176,176,199	0.0	0.0	0.0	0,0,0
5157	6.13e-03	0.07	7.38e-03	176,176,199	0.0	0.0	0.0	0,0,0
5158	6.00e-03	0.06	7.24e-03	176,176,199	0.0	0.0	0.0	0,0,0
5159	5.69e-03	0.04	6.93e-03	176,176,199	0.0	0.0	0.0	0,0,0
5160	7.53e-03	0.03	0.01	176,176,199	0.0	0.0	0.0	0,0,0
5161	9.28e-03	0.04	0.01	176,176,199	0.0	0.0	0.0	0,0,0
5162	9.99e-03	0.06	0.01	176,176,199	0.0	0.0	0.0	0,0,0
5163	9.48e-03	0.06	0.01	157,176,197	0.0	0.0	0.0	0,0,0
5164	0.01	0.05	0.01	157,176,197	0.0	0.0	0.0	0,0,0
5165	0.02	0.04	0.02	176,176,199	0.0	0.0	0.0	0,0,0
5224	9.52e-03	0.02	0.01	157,176,197	0.0	0.0	0.0	0,0,0
5225	7.91e-03	0.02	0.01	157,176,197	0.0	0.0	0.0	0,0,0
5226	6.66e-03	0.02	8.88e-03	157,176,197	0.0	0.0	0.0	0,0,0
5227	6.56e-03	0.02	8.72e-03	176,176,199	0.0	0.0	0.0	0,0,0
5228	6.91e-03	0.02	8.97e-03	176,176,199	0.0	0.0	0.0	0,0,0
5229	5.56e-03	0.01	7.10e-03	176,176,199	0.0	0.0	0.0	0,0,0
5230	4.55e-03	0.02	5.73e-03	172,176,197	0.0	0.0	0.0	0,0,0
5231	4.45e-03	0.03	5.58e-03	176,176,199	0.0	0.0	0.0	0,0,0
5232	4.35e-03	0.03	5.43e-03	172,176,197	0.0	0.0	0.0	0,0,0
5233	4.34e-03	0.03	5.37e-03	172,176,197	0.0	0.0	0.0	0,0,0
5234	4.68e-03	0.02	5.70e-03	176,176,199	0.0	0.0	0.0	0,0,0
5235	3.64e-03	0.01	4.43e-03	172,176,197	0.0	0.0	0.0	0,0,0
5236	3.30e-03	0.02	3.87e-03	176,176,199	0.0	0.0	0.0	0,0,0
5237	3.48e-03	0.02	4.07e-03	176,176,199	0.0	0.0	0.0	0,0,0
5238	3.19e-03	0.03	3.69e-03	176,176,199	0.0	0.0	0.0	0,0,0
5239	3.16e-03	0.02	3.67e-03	176,176,199	0.0	0.0	0.0	0,0,0
5240	3.16e-03	0.01	3.69e-03	176,176,199	0.0	0.0	0.0	0,0,0
5241	3.33e-03	0.01	4.01e-03	172,176,197	0.0	0.0	0.0	0,0,0
5242	4.09e-03	0.02	4.91e-03	176,176,199	0.0	0.0	0.0	0,0,0
5243	3.91e-03	0.03	4.80e-03	172,176,197	0.0	0.0	0.0	0,0,0
5244	4.04e-03	0.03	4.80e-03	176,176,199	0.0	0.0	0.0	0,0,0
5245	4.06e-03	0.02	4.85e-03	176,176,199	0.0	0.0	0.0	0,0,0
5246	4.18e-03	0.02	5.22e-03	172,176,197	0.0	0.0	0.0	0,0,0
5247	4.91e-03	0.01	6.11e-03	172,176,197	0.0	0.0	0.0	0,0,0
5248	5.69e-03	0.02	7.15e-03	176,176,199	0.0	0.0	0.0	0,0,0
5249	5.56e-03	0.02	7.23e-03	172,176,197	0.0	0.0	0.0	0,0,0
5250	5.57e-03	0.02	7.32e-03	172,176,197	0.0	0.0	0.0	0,0,0
5251	7.18e-03	0.02	9.57e-03	157,176,197	0.0	0.0	0.0	0,0,0
5252	9.22e-03	0.02	0.01	157,176,197	0.0	0.0	0.0	0,0,0
5253	5.38e-03	8.06e-03	6.31e-03	176,176,199	0.0	0.0	0.0	0,0,0
5254	5.00e-03	0.01	6.36e-03	172,172,197	0.0	0.0	0.0	0,0,0
5255	4.66e-03	0.01	5.85e-03	172,172,197	0.0	0.0	0.0	0,0,0
5256	4.51e-03	9.61e-03	5.66e-03	172,172,197	0.0	0.0	0.0	0,0,0
5257	4.58e-03	9.61e-03	5.69e-03	176,176,199	0.0	0.0	0.0	0,0,0
5258	4.19e-03	9.83e-03	5.20e-03	176,176,199	0.0	0.0	0.0	0,0,0
5259	3.65e-03	9.32e-03	4.54e-03	172,176,197	0.0	0.0	0.0	0,0,0
5260	3.63e-03	9.42e-03	4.48e-03	172,176,197	0.0	0.0	0.0	0,0,0
5261	3.55e-03	0.01	4.37e-03	172,176,197	0.0	0.0	0.0	0,0,0
5262	3.44e-03	9.93e-03	4.22e-03	172,172,197	0.0	0.0	0.0	0,0,0
5263	3.48e-03	0.01	4.24e-03	176,176,199	0.0	0.0	0.0	0,0,0
5264	3.09e-03	0.01	3.75e-03	172,176,197	0.0	0.0	0.0	0,0,0
5265	2.61e-03	0.01	3.16e-03	172,176,197	0.0	0.0	0.0	0,0,0
5266	2.61e-03	0.01	3.13e-03	172,172,197	0.0	0.0	0.0	0,0,0
5267	2.45e-03	0.01	2.92e-03	172,176,197	0.0	0.0	0.0	0,0,0
5268	2.62e-03	0.01	3.15e-03	172,176,197	0.0	0.0	0.0	0,0,0
5269	2.71e-03	0.01	3.28e-03	172,176,197	0.0	0.0	0.0	0,0,0
5270	3.00e-03	0.01	3.63e-03	172,176,197	0.0	0.0	0.0	0,0,0
5271	3.00e-03	9.01e-03	3.63e-03	176,157,199	0.0	0.0	0.0	0,0,0
5272	3.14e-03	8.57e-03	3.85e-03	172,157,197	0.0	0.0	0.0	0,0,0
5273	3.20e-03	7.83e-03	3.93e-03	172,157,197	0.0	0.0	0.0	0,0,0

5274	3.23e-03	7.31e-03	3.97e-03	172,157,197	0.0	0.0	0.0	0,0,0
5275	3.35e-03	7.47e-03	4.16e-03	172,157,197	0.0	0.0	0.0	0,0,0
5276	4.02e-03	9.20e-03	4.99e-03	176,176,197	0.0	0.0	0.0	0,0,0
5277	3.86e-03	6.64e-03	4.77e-03	176,176,199	0.0	0.0	0.0	0,0,0
5278	4.46e-03	9.52e-03	5.59e-03	172,172,197	0.0	0.0	0.0	0,0,0
5279	4.53e-03	0.01	5.68e-03	172,172,197	0.0	0.0	0.0	0,0,0
5280	4.99e-03	0.01	6.30e-03	172,172,197	0.0	0.0	0.0	0,0,0
5281	5.45e-03	8.25e-03	6.39e-03	176,176,199	0.0	0.0	0.0	0,0,0
5282	6.90e-03	8.46e-03	8.18e-03	176,176,199	0.0	0.0	0.0	0,0,0
5283	3.70e-03	1.87e-03	4.35e-03	176,172,199	0.0	0.0	0.0	0,0,0
5284	3.68e-03	2.14e-03	4.41e-03	176,176,199	0.0	0.0	0.0	0,0,0
5285	3.54e-03	1.97e-03	4.32e-03	176,176,199	0.0	0.0	0.0	0,0,0
5286	4.08e-03	2.41e-03	4.98e-03	176,176,199	0.0	0.0	0.0	0,0,0
5287	3.90e-03	2.23e-03	4.81e-03	176,176,199	0.0	0.0	0.0	0,0,0
5288	4.43e-03	2.65e-03	5.48e-03	176,176,199	0.0	0.0	0.0	0,0,0
5289	4.23e-03	2.50e-03	5.35e-03	176,176,199	0.0	0.0	0.0	0,0,0
5290	4.80e-03	2.91e-03	5.98e-03	176,176,199	0.0	0.0	0.0	0,0,0
5291	4.75e-03	2.85e-03	6.07e-03	176,176,199	0.0	0.0	0.0	0,0,0
5292	4.99e-03	3.03e-03	6.17e-03	176,176,199	0.0	0.0	0.0	0,0,0
5293	5.00e-03	2.98e-03	6.28e-03	176,176,199	0.0	0.0	0.0	0,0,0
5294	5.28e-03	3.18e-03	6.66e-03	176,176,199	0.0	0.0	0.0	0,0,0
5295	5.27e-03	3.13e-03	6.66e-03	176,176,199	0.0	0.0	0.0	0,0,0
5296	5.56e-03	3.35e-03	7.03e-03	176,176,199	0.0	0.0	0.0	0,0,0
5297	5.53e-03	3.30e-03	7.01e-03	176,176,199	0.0	0.0	0.0	0,0,0
5298	5.78e-03	3.49e-03	7.32e-03	176,176,199	0.0	0.0	0.0	0,0,0
5299	5.71e-03	3.41e-03	7.24e-03	176,176,199	0.0	0.0	0.0	0,0,0
5300	5.91e-03	3.58e-03	7.49e-03	176,176,199	0.0	0.0	0.0	0,0,0
5301	5.83e-03	3.50e-03	7.45e-03	176,176,199	0.0	0.0	0.0	0,0,0
5302	6.04e-03	3.68e-03	7.44e-03	176,176,199	0.0	0.0	0.0	0,0,0
5303	6.07e-03	3.66e-03	7.82e-03	176,176,199	0.0	0.0	0.0	0,0,0
5304	6.13e-03	3.67e-03	7.89e-03	176,176,199	0.0	0.0	0.0	0,0,0
5305	6.16e-03	3.73e-03	7.82e-03	176,176,199	0.0	0.0	0.0	0,0,0
5306	6.04e-03	3.66e-03	7.69e-03	176,176,199	0.0	0.0	0.0	0,0,0
5307	6.13e-03	3.70e-03	7.79e-03	176,176,199	0.0	0.0	0.0	0,0,0
5308	6.05e-03	3.66e-03	7.75e-03	176,176,199	0.0	0.0	0.0	0,0,0
5309	6.18e-03	3.74e-03	7.84e-03	176,176,199	0.0	0.0	0.0	0,0,0
5310	6.07e-03	3.65e-03	7.83e-03	176,176,199	0.0	0.0	0.0	0,0,0
5311	6.14e-03	3.73e-03	7.79e-03	176,176,199	0.0	0.0	0.0	0,0,0
5312	6.02e-03	3.62e-03	7.76e-03	176,176,199	0.0	0.0	0.0	0,0,0
5313	6.07e-03	3.68e-03	7.70e-03	176,176,199	0.0	0.0	0.0	0,0,0
5314	5.94e-03	3.60e-03	7.67e-03	176,176,199	0.0	0.0	0.0	0,0,0
5315	6.01e-03	3.66e-03	7.54e-03	176,176,199	0.0	0.0	0.0	0,0,0
5316	5.96e-03	3.58e-03	7.67e-03	176,176,199	0.0	0.0	0.0	0,0,0
5317	5.68e-03	3.50e-03	7.34e-03	176,176,199	0.0	0.0	0.0	0,0,0
5318	5.85e-03	3.55e-03	7.54e-03	176,176,199	0.0	0.0	0.0	0,0,0
5319	5.48e-03	3.40e-03	7.09e-03	176,176,199	0.0	0.0	0.0	0,0,0
5320	5.64e-03	3.41e-03	7.25e-03	176,176,199	0.0	0.0	0.0	0,0,0
5321	5.41e-03	3.30e-03	6.83e-03	176,176,197	0.0	0.0	0.0	0,0,0
5322	5.43e-03	3.28e-03	6.97e-03	176,176,199	0.0	0.0	0.0	0,0,0
5323	5.24e-03	3.20e-03	6.55e-03	176,176,197	0.0	0.0	0.0	0,0,0
5324	5.18e-03	3.12e-03	6.66e-03	176,176,199	0.0	0.0	0.0	0,0,0
5325	4.94e-03	3.01e-03	6.28e-03	176,176,199	0.0	0.0	0.0	0,0,0
5326	4.95e-03	2.99e-03	6.35e-03	176,176,199	0.0	0.0	0.0	0,0,0
5327	4.93e-03	3.01e-03	6.02e-03	176,176,199	0.0	0.0	0.0	0,0,0
5328	4.64e-03	2.78e-03	5.93e-03	176,176,199	0.0	0.0	0.0	0,0,0
5329	4.36e-03	2.71e-03	5.54e-03	176,176,199	0.0	0.0	0.0	0,0,0
5330	4.38e-03	2.64e-03	5.56e-03	176,176,199	0.0	0.0	0.0	0,0,0
5331	4.35e-03	2.64e-03	5.20e-03	176,176,199	0.0	0.0	0.0	0,0,0
5332	3.87e-03	2.28e-03	4.86e-03	176,176,199	0.0	0.0	0.0	0,0,0
5333	4.00e-03	2.39e-03	4.87e-03	176,176,199	0.0	0.0	0.0	0,0,0
5334	3.55e-03	2.02e-03	4.36e-03	176,176,199	0.0	0.0	0.0	0,0,0
5335	3.60e-03	2.14e-03	4.31e-03	176,176,199	0.0	0.0	0.0	0,0,0
5336	3.55e-03	1.81e-03	4.16e-03	176,172,199	0.0	0.0	0.0	0,0,0
5337	7.05e-03	9.01e-03	8.37e-03	176,176,199	0.0	0.0	0.0	0,0,0

Setto	**rRfck**	**rRfyk**	**rPfck**		**wR**	**wF**	**wP**	
	0.29	0.38	0.35		9.15e-03	0.0	0.0	

Guscio	**rRfck**	**rRfyk**	**rPfck**	**Rif. cmb**	**wR**	**wF**	**wP**	**Rif. cmb**
					mm	mm	mm	
1	0.06	0.13	0.07	176,176,199	0.0	0.0	0.0	0,0,0
2	0.03	0.07	0.04	172,172,197	0.0	0.0	0.0	0,0,0
3	0.04	0.09	0.05	172,172,197	0.0	0.0	0.0	0,0,0
4	0.04	0.09	0.05	172,172,197	0.0	0.0	0.0	0,0,0
5	0.04	0.09	0.05	176,172,199	0.0	0.0	0.0	0,0,0
6	0.04	0.09	0.05	176,176,199	0.0	0.0	0.0	0,0,0
7	0.04	0.09	0.05	176,176,199	0.0	0.0	0.0	0,0,0

8	0.03	0.07	0.04	172,172,197	0.0	0.0	0.0	0,0,0
9	0.03	0.06	0.03	172,172,197	0.0	0.0	0.0	0,0,0
10	0.05	0.09	0.06	172,172,197	0.0	0.0	0.0	0,0,0
11	0.13	0.29	0.16	176,176,199	0.0	0.0	0.0	0,0,0
12	0.11	0.24	0.14	176,176,199	0.0	0.0	0.0	0,0,0
13	0.04	0.09	0.05	172,176,197	0.0	0.0	0.0	0,0,0
14	0.03	0.06	0.04	172,172,197	0.0	0.0	0.0	0,0,0
15	0.03	0.08	0.04	172,172,197	0.0	0.0	0.0	0,0,0
16	0.04	0.08	0.05	172,172,197	0.0	0.0	0.0	0,0,0
17	0.04	0.09	0.05	172,172,197	0.0	0.0	0.0	0,0,0
18	0.04	0.09	0.05	172,172,197	0.0	0.0	0.0	0,0,0
19	0.04	0.08	0.05	172,172,197	0.0	0.0	0.0	0,0,0
20	0.04	0.08	0.04	172,172,197	0.0	0.0	0.0	0,0,0
21	0.03	0.07	0.04	172,172,197	0.0	0.0	0.0	0,0,0
22	0.05	0.11	0.06	172,172,197	0.0	0.0	0.0	0,0,0
23	0.13	0.29	0.16	176,176,199	0.0	0.0	0.0	0,0,0
24	0.13	0.29	0.16	176,176,199	0.0	0.0	0.0	0,0,0
25	0.05	0.11	0.06	172,172,197	0.0	0.0	0.0	0,0,0
26	0.03	0.06	0.04	172,172,197	0.0	0.0	0.0	0,0,0
27	0.03	0.08	0.04	172,172,197	0.0	0.0	0.0	0,0,0
28	0.04	0.08	0.05	172,172,197	0.0	0.0	0.0	0,0,0
29	0.04	0.09	0.05	172,172,197	0.0	0.0	0.0	0,0,0
30	0.04	0.09	0.05	172,172,197	0.0	0.0	0.0	0,0,0
31	0.04	0.08	0.05	172,172,197	0.0	0.0	0.0	0,0,0
32	0.03	0.08	0.04	172,172,197	0.0	0.0	0.0	0,0,0
33	0.03	0.07	0.04	172,172,197	0.0	0.0	0.0	0,0,0
34	0.05	0.11	0.06	172,172,197	0.0	0.0	0.0	0,0,0
35	0.13	0.29	0.16	176,176,199	0.0	0.0	0.0	0,0,0
36	0.13	0.29	0.16	176,176,199	0.0	0.0	0.0	0,0,0
37	0.05	0.11	0.06	172,172,197	0.0	0.0	0.0	0,0,0
38	0.03	0.07	0.04	172,172,197	0.0	0.0	0.0	0,0,0
39	0.03	0.08	0.04	172,172,197	0.0	0.0	0.0	0,0,0
40	0.04	0.08	0.05	172,172,197	0.0	0.0	0.0	0,0,0
41	0.04	0.09	0.05	172,172,197	0.0	0.0	0.0	0,0,0
42	0.04	0.09	0.05	172,172,197	0.0	0.0	0.0	0,0,0
43	0.04	0.08	0.05	172,172,197	0.0	0.0	0.0	0,0,0
44	0.04	0.08	0.04	172,172,197	0.0	0.0	0.0	0,0,0
45	0.03	0.07	0.04	172,172,197	0.0	0.0	0.0	0,0,0
46	0.04	0.09	0.05	172,176,197	0.0	0.0	0.0	0,0,0
47	0.11	0.25	0.14	176,176,199	0.0	0.0	0.0	0,0,0
48	0.13	0.28	0.16	176,176,199	0.0	0.0	0.0	0,0,0
49	0.05	0.09	0.06	172,172,197	0.0	0.0	0.0	0,0,0
50	0.03	0.06	0.03	172,172,197	0.0	0.0	0.0	0,0,0
51	0.03	0.07	0.04	172,172,197	0.0	0.0	0.0	0,0,0
52	0.04	0.09	0.05	176,176,199	0.0	0.0	0.0	0,0,0
53	0.04	0.09	0.05	176,176,199	0.0	0.0	0.0	0,0,0
54	0.04	0.09	0.05	176,172,199	0.0	0.0	0.0	0,0,0
55	0.04	0.09	0.05	172,172,197	0.0	0.0	0.0	0,0,0
56	0.04	0.09	0.05	172,172,197	0.0	0.0	0.0	0,0,0
57	0.03	0.07	0.04	172,172,197	0.0	0.0	0.0	0,0,0
58	0.06	0.13	0.07	176,176,199	0.0	0.0	0.0	0,0,0
59	0.07	0.14	0.08	176,176,199	0.0	0.0	0.0	0,0,0
60	0.05	0.11	0.07	176,176,199	0.0	0.0	0.0	0,0,0
61	0.04	0.09	0.05	172,172,197	0.0	0.0	0.0	0,0,0
62	0.04	0.09	0.05	172,172,197	0.0	0.0	0.0	0,0,0
63	0.04	0.09	0.05	172,172,197	0.0	0.0	0.0	0,0,0
64	0.04	0.09	0.05	172,172,197	0.0	0.0	0.0	0,0,0
65	0.04	0.08	0.05	172,172,197	0.0	0.0	0.0	0,0,0
66	0.03	0.07	0.04	172,172,197	0.0	0.0	0.0	0,0,0
67	0.03	0.07	0.04	172,172,197	0.0	0.0	0.0	0,0,0
68	0.04	0.09	0.05	176,176,199	0.0	0.0	0.0	0,0,0
69	0.13	0.29	0.16	176,176,199	0.0	0.0	0.0	0,0,0
70	0.11	0.25	0.14	176,176,199	0.0	0.0	0.0	0,0,0
71	0.04	0.09	0.05	176,176,199	0.0	0.0	0.0	0,0,0
72	0.03	0.07	0.04	172,172,197	0.0	0.0	0.0	0,0,0
73	0.03	0.07	0.04	172,172,197	0.0	0.0	0.0	0,0,0
74	0.04	0.08	0.04	172,172,197	0.0	0.0	0.0	0,0,0
75	0.04	0.08	0.04	172,172,197	0.0	0.0	0.0	0,0,0
76	0.04	0.08	0.04	172,172,197	0.0	0.0	0.0	0,0,0
77	0.04	0.08	0.04	172,172,197	0.0	0.0	0.0	0,0,0
78	0.03	0.08	0.04	172,172,197	0.0	0.0	0.0	0,0,0
79	0.03	0.08	0.04	172,172,197	0.0	0.0	0.0	0,0,0
80	0.05	0.10	0.06	176,176,199	0.0	0.0	0.0	0,0,0
81	0.13	0.29	0.16	176,176,199	0.0	0.0	0.0	0,0,0
82	0.13	0.29	0.16	176,176,199	0.0	0.0	0.0	0,0,0
83	0.04	0.10	0.06	176,176,199	0.0	0.0	0.0	0,0,0
84	0.03	0.07	0.04	172,172,197	0.0	0.0	0.0	0,0,0
85	0.03	0.08	0.04	172,172,197	0.0	0.0	0.0	0,0,0
86	0.04	0.08	0.04	172,172,197	0.0	0.0	0.0	0,0,0

87	0.04	0.08	0.04	172,172,197	0.0	0.0	0.0	0,0,0
88	0.04	0.08	0.04	172,172,197	0.0	0.0	0.0	0,0,0
89	0.04	0.08	0.04	172,172,197	0.0	0.0	0.0	0,0,0
90	0.03	0.08	0.04	172,172,197	0.0	0.0	0.0	0,0,0
91	0.03	0.07	0.04	172,172,197	0.0	0.0	0.0	0,0,0
92	0.05	0.10	0.06	176,176,199	0.0	0.0	0.0	0,0,0
93	0.13	0.29	0.16	176,176,199	0.0	0.0	0.0	0,0,0
94	0.13	0.29	0.16	176,176,199	0.0	0.0	0.0	0,0,0
95	0.05	0.10	0.06	176,176,199	0.0	0.0	0.0	0,0,0
96	0.03	0.07	0.04	172,172,197	0.0	0.0	0.0	0,0,0
97	0.03	0.08	0.04	172,172,197	0.0	0.0	0.0	0,0,0
98	0.04	0.08	0.04	172,172,197	0.0	0.0	0.0	0,0,0
99	0.04	0.08	0.04	172,172,197	0.0	0.0	0.0	0,0,0
100	0.04	0.08	0.04	172,172,197	0.0	0.0	0.0	0,0,0
101	0.04	0.08	0.04	172,172,197	0.0	0.0	0.0	0,0,0
102	0.03	0.08	0.04	172,172,197	0.0	0.0	0.0	0,0,0
103	0.03	0.07	0.04	172,172,197	0.0	0.0	0.0	0,0,0
104	0.04	0.09	0.05	176,176,199	0.0	0.0	0.0	0,0,0
105	0.12	0.25	0.14	176,176,199	0.0	0.0	0.0	0,0,0
106	0.13	0.28	0.16	176,176,199	0.0	0.0	0.0	0,0,0
107	0.04	0.09	0.05	176,176,199	0.0	0.0	0.0	0,0,0
108	0.03	0.07	0.04	172,172,197	0.0	0.0	0.0	0,0,0
109	0.03	0.07	0.04	172,172,197	0.0	0.0	0.0	0,0,0
110	0.04	0.08	0.05	172,172,197	0.0	0.0	0.0	0,0,0
111	0.04	0.09	0.05	172,172,197	0.0	0.0	0.0	0,0,0
112	0.04	0.09	0.05	172,172,197	0.0	0.0	0.0	0,0,0
113	0.04	0.09	0.05	172,172,197	0.0	0.0	0.0	0,0,0
114	0.04	0.09	0.05	172,172,197	0.0	0.0	0.0	0,0,0
115	0.05	0.12	0.07	176,176,199	0.0	0.0	0.0	0,0,0
116	0.07	0.14	0.08	176,176,199	0.0	0.0	0.0	0,0,0
117	0.05	0.10	0.06	172,172,197	0.0	0.0	0.0	0,0,0
118	0.04	0.10	0.06	172,172,197	0.0	0.0	0.0	0,0,0
119	0.04	0.10	0.06	172,172,197	0.0	0.0	0.0	0,0,0
120	0.04	0.09	0.05	172,172,197	0.0	0.0	0.0	0,0,0
121	0.04	0.09	0.05	172,172,197	0.0	0.0	0.0	0,0,0
122	0.04	0.08	0.05	172,172,197	0.0	0.0	0.0	0,0,0
123	0.03	0.07	0.04	172,172,197	0.0	0.0	0.0	0,0,0
124	0.03	0.07	0.04	172,172,197	0.0	0.0	0.0	0,0,0
125	0.03	0.07	0.04	172,172,197	0.0	0.0	0.0	0,0,0
126	0.03	0.07	0.04	172,172,197	0.0	0.0	0.0	0,0,0
127	0.05	0.11	0.06	176,176,199	0.0	0.0	0.0	0,0,0
128	0.05	0.10	0.06	176,176,199	0.0	0.0	0.0	0,0,0
129	0.03	0.07	0.04	172,172,197	0.0	0.0	0.0	0,0,0
130	0.03	0.07	0.04	172,172,197	0.0	0.0	0.0	0,0,0
131	0.03	0.07	0.04	172,172,197	0.0	0.0	0.0	0,0,0
132	0.03	0.07	0.04	172,172,197	0.0	0.0	0.0	0,0,0
133	0.03	0.07	0.04	172,172,197	0.0	0.0	0.0	0,0,0
134	0.03	0.08	0.04	172,172,197	0.0	0.0	0.0	0,0,0
135	0.03	0.08	0.04	172,172,197	0.0	0.0	0.0	0,0,0
136	0.04	0.08	0.04	172,172,197	0.0	0.0	0.0	0,0,0
137	0.03	0.08	0.04	172,172,197	0.0	0.0	0.0	0,0,0
138	0.04	0.09	0.04	176,176,199	0.0	0.0	0.0	0,0,0
139	0.05	0.12	0.07	176,176,199	0.0	0.0	0.0	0,0,0
140	0.05	0.12	0.06	176,176,199	0.0	0.0	0.0	0,0,0
141	0.04	0.08	0.04	176,176,199	0.0	0.0	0.0	0,0,0
142	0.03	0.07	0.04	172,172,197	0.0	0.0	0.0	0,0,0
143	0.03	0.08	0.04	172,172,197	0.0	0.0	0.0	0,0,0
144	0.03	0.08	0.04	172,172,197	0.0	0.0	0.0	0,0,0
145	0.03	0.08	0.04	172,172,197	0.0	0.0	0.0	0,0,0
146	0.03	0.08	0.04	172,172,197	0.0	0.0	0.0	0,0,0
147	0.03	0.08	0.04	172,172,197	0.0	0.0	0.0	0,0,0
148	0.03	0.08	0.04	172,172,197	0.0	0.0	0.0	0,0,0
149	0.03	0.07	0.04	172,172,197	0.0	0.0	0.0	0,0,0
150	0.04	0.08	0.04	176,176,199	0.0	0.0	0.0	0,0,0
151	0.05	0.12	0.06	176,176,199	0.0	0.0	0.0	0,0,0
152	0.05	0.12	0.07	176,176,199	0.0	0.0	0.0	0,0,0
153	0.04	0.08	0.04	176,176,199	0.0	0.0	0.0	0,0,0
154	0.03	0.08	0.04	172,172,197	0.0	0.0	0.0	0,0,0
155	0.03	0.08	0.04	172,172,197	0.0	0.0	0.0	0,0,0
156	0.03	0.08	0.04	172,172,197	0.0	0.0	0.0	0,0,0
157	0.03	0.08	0.04	172,172,197	0.0	0.0	0.0	0,0,0
158	0.03	0.07	0.04	172,172,197	0.0	0.0	0.0	0,0,0
159	0.03	0.08	0.04	172,172,197	0.0	0.0	0.0	0,0,0
160	0.03	0.08	0.04	172,172,197	0.0	0.0	0.0	0,0,0
161	0.03	0.07	0.04	172,172,197	0.0	0.0	0.0	0,0,0
162	0.03	0.07	0.04	172,172,197	0.0	0.0	0.0	0,0,0
163	0.05	0.10	0.06	176,176,199	0.0	0.0	0.0	0,0,0
164	0.05	0.11	0.06	176,176,199	0.0	0.0	0.0	0,0,0
165	0.03	0.07	0.04	172,172,197	0.0	0.0	0.0	0,0,0

166	0.03	0.07	0.04	172,172,197	0.0	0.0	0.0	0,0,0
167	0.03	0.07	0.04	172,172,197	0.0	0.0	0.0	0,0,0
168	0.03	0.07	0.04	172,172,197	0.0	0.0	0.0	0,0,0
169	0.04	0.08	0.05	172,172,197	0.0	0.0	0.0	0,0,0
170	0.04	0.09	0.05	172,172,197	0.0	0.0	0.0	0,0,0
171	0.04	0.09	0.05	172,172,197	0.0	0.0	0.0	0,0,0
172	0.04	0.10	0.06	172,172,197	0.0	0.0	0.0	0,0,0
173	0.04	0.10	0.06	172,172,197	0.0	0.0	0.0	0,0,0
174	0.05	0.10	0.06	172,172,197	0.0	0.0	0.0	0,0,0
175	0.05	0.10	0.06	172,172,197	0.0	0.0	0.0	0,0,0
176	0.04	0.10	0.06	172,172,197	0.0	0.0	0.0	0,0,0
177	0.04	0.10	0.06	172,172,197	0.0	0.0	0.0	0,0,0
178	0.04	0.09	0.05	172,172,197	0.0	0.0	0.0	0,0,0
179	0.04	0.08	0.05	172,172,197	0.0	0.0	0.0	0,0,0
180	0.03	0.07	0.04	172,172,197	0.0	0.0	0.0	0,0,0
181	0.03	0.07	0.04	172,172,197	0.0	0.0	0.0	0,0,0
182	0.03	0.07	0.04	172,172,197	0.0	0.0	0.0	0,0,0
183	0.03	0.07	0.04	172,172,197	0.0	0.0	0.0	0,0,0
184	0.03	0.07	0.04	172,172,197	0.0	0.0	0.0	0,0,0
185	0.03	0.07	0.04	172,172,197	0.0	0.0	0.0	0,0,0
186	0.03	0.07	0.04	172,172,197	0.0	0.0	0.0	0,0,0
187	0.03	0.07	0.04	172,172,197	0.0	0.0	0.0	0,0,0
188	0.03	0.07	0.04	172,172,197	0.0	0.0	0.0	0,0,0
189	0.03	0.07	0.04	172,172,197	0.0	0.0	0.0	0,0,0
190	0.03	0.07	0.04	172,172,197	0.0	0.0	0.0	0,0,0
191	0.03	0.06	0.03	172,172,197	0.0	0.0	0.0	0,0,0
192	0.03	0.07	0.04	172,172,197	0.0	0.0	0.0	0,0,0
193	0.03	0.07	0.04	172,172,197	0.0	0.0	0.0	0,0,0
194	0.03	0.08	0.04	172,172,197	0.0	0.0	0.0	0,0,0
195	0.03	0.08	0.04	172,172,197	0.0	0.0	0.0	0,0,0
196	0.03	0.08	0.04	172,172,197	0.0	0.0	0.0	0,0,0
197	0.03	0.07	0.04	172,172,197	0.0	0.0	0.0	0,0,0
198	0.03	0.07	0.04	172,172,197	0.0	0.0	0.0	0,0,0
199	0.03	0.07	0.04	172,172,197	0.0	0.0	0.0	0,0,0
200	0.03	0.07	0.04	172,172,197	0.0	0.0	0.0	0,0,0
201	0.03	0.07	0.04	172,172,197	0.0	0.0	0.0	0,0,0
202	0.03	0.07	0.04	172,172,197	0.0	0.0	0.0	0,0,0
203	0.03	0.06	0.04	172,172,197	0.0	0.0	0.0	0,0,0
204	0.03	0.07	0.04	172,172,197	0.0	0.0	0.0	0,0,0
205	0.03	0.07	0.04	172,172,197	0.0	0.0	0.0	0,0,0
206	0.03	0.07	0.04	172,172,197	0.0	0.0	0.0	0,0,0
207	0.03	0.07	0.04	172,172,197	0.0	0.0	0.0	0,0,0
208	0.03	0.07	0.04	172,172,197	0.0	0.0	0.0	0,0,0
209	0.03	0.07	0.04	172,172,197	0.0	0.0	0.0	0,0,0
210	0.03	0.07	0.04	172,172,197	0.0	0.0	0.0	0,0,0
211	0.03	0.07	0.04	172,172,197	0.0	0.0	0.0	0,0,0
212	0.03	0.08	0.04	172,172,197	0.0	0.0	0.0	0,0,0
213	0.03	0.08	0.04	172,172,197	0.0	0.0	0.0	0,0,0
214	0.03	0.07	0.04	172,172,197	0.0	0.0	0.0	0,0,0
215	0.03	0.07	0.04	172,172,197	0.0	0.0	0.0	0,0,0
216	0.03	0.06	0.04	172,172,197	0.0	0.0	0.0	0,0,0
217	0.03	0.07	0.04	172,172,197	0.0	0.0	0.0	0,0,0
218	0.03	0.07	0.04	172,172,197	0.0	0.0	0.0	0,0,0
219	0.03	0.07	0.04	172,172,197	0.0	0.0	0.0	0,0,0
220	0.03	0.07	0.04	172,172,197	0.0	0.0	0.0	0,0,0
221	0.03	0.07	0.04	172,172,197	0.0	0.0	0.0	0,0,0
222	0.03	0.07	0.04	172,172,197	0.0	0.0	0.0	0,0,0
223	0.03	0.07	0.04	172,172,197	0.0	0.0	0.0	0,0,0
224	0.03	0.07	0.04	172,172,197	0.0	0.0	0.0	0,0,0
225	0.03	0.07	0.04	172,172,197	0.0	0.0	0.0	0,0,0
226	0.03	0.07	0.04	172,172,197	0.0	0.0	0.0	0,0,0
227	0.03	0.07	0.04	172,172,197	0.0	0.0	0.0	0,0,0
228	0.04	0.09	0.05	172,172,197	0.0	0.0	0.0	0,0,0
229	0.04	0.09	0.05	172,172,197	0.0	0.0	0.0	0,0,0
230	0.04	0.10	0.06	172,172,197	0.0	0.0	0.0	0,0,0
231	0.04	0.10	0.06	172,172,197	0.0	0.0	0.0	0,0,0
232	0.05	0.10	0.06	172,172,197	0.0	0.0	0.0	0,0,0
233	0.04	0.08	0.05	172,172,197	0.0	0.0	0.0	0,0,0
234	0.03	0.07	0.04	172,172,197	0.0	0.0	0.0	0,0,0
235	0.03	0.08	0.04	172,172,197	0.0	0.0	0.0	0,0,0
236	0.03	0.08	0.04	172,172,197	0.0	0.0	0.0	0,0,0
237	0.04	0.08	0.05	172,172,197	0.0	0.0	0.0	0,0,0
238	0.04	0.09	0.05	172,172,197	0.0	0.0	0.0	0,0,0
239	0.04	0.09	0.05	172,172,197	0.0	0.0	0.0	0,0,0
240	0.04	0.09	0.05	172,172,197	0.0	0.0	0.0	0,0,0
241	0.03	0.08	0.04	172,172,197	0.0	0.0	0.0	0,0,0
242	0.04	0.09	0.05	172,172,197	0.0	0.0	0.0	0,0,0
243	0.04	0.10	0.05	172,172,197	0.0	0.0	0.0	0,0,0
244	0.04	0.09	0.05	172,172,197	0.0	0.0	0.0	0,0,0

245	0.04	0.10	0.05	172,172,197	0.0	0.0	0.0	0,0,0
246	0.04	0.10	0.05	172,172,197	0.0	0.0	0.0	0,0,0
247	0.05	0.11	0.06	172,172,197	0.0	0.0	0.0	0,0,0
248	0.05	0.11	0.06	172,172,197	0.0	0.0	0.0	0,0,0
249	0.05	0.12	0.06	172,172,197	0.0	0.0	0.0	0,0,0
250	0.05	0.12	0.06	172,172,197	0.0	0.0	0.0	0,0,0
251	0.05	0.11	0.06	172,172,197	0.0	0.0	0.0	0,0,0
252	0.05	0.11	0.06	172,172,197	0.0	0.0	0.0	0,0,0
253	0.04	0.10	0.05	172,172,197	0.0	0.0	0.0	0,0,0
254	0.04	0.10	0.06	172,172,197	0.0	0.0	0.0	0,0,0
255	0.04	0.10	0.05	172,172,197	0.0	0.0	0.0	0,0,0
256	0.04	0.10	0.05	172,172,197	0.0	0.0	0.0	0,0,0
257	0.04	0.10	0.05	172,172,197	0.0	0.0	0.0	0,0,0
258	0.04	0.10	0.05	172,172,197	0.0	0.0	0.0	0,0,0
259	0.05	0.11	0.06	172,172,197	0.0	0.0	0.0	0,0,0
260	0.05	0.11	0.06	172,172,197	0.0	0.0	0.0	0,0,0
261	0.05	0.12	0.06	172,172,197	0.0	0.0	0.0	0,0,0
262	0.05	0.12	0.06	172,172,197	0.0	0.0	0.0	0,0,0
263	0.05	0.11	0.06	172,172,197	0.0	0.0	0.0	0,0,0
264	0.05	0.11	0.06	172,172,197	0.0	0.0	0.0	0,0,0
265	0.04	0.10	0.05	172,172,197	0.0	0.0	0.0	0,0,0
266	0.04	0.10	0.05	172,172,197	0.0	0.0	0.0	0,0,0
267	0.04	0.10	0.05	172,172,197	0.0	0.0	0.0	0,0,0
268	0.04	0.10	0.05	172,172,197	0.0	0.0	0.0	0,0,0
269	0.04	0.10	0.05	172,172,197	0.0	0.0	0.0	0,0,0
270	0.04	0.10	0.05	172,172,197	0.0	0.0	0.0	0,0,0
271	0.05	0.11	0.06	172,172,197	0.0	0.0	0.0	0,0,0
272	0.05	0.11	0.06	172,172,197	0.0	0.0	0.0	0,0,0
273	0.05	0.11	0.06	172,172,197	0.0	0.0	0.0	0,0,0
274	0.05	0.11	0.06	172,172,197	0.0	0.0	0.0	0,0,0
275	0.04	0.11	0.06	172,172,197	0.0	0.0	0.0	0,0,0
276	0.05	0.11	0.06	172,172,197	0.0	0.0	0.0	0,0,0
277	0.04	0.10	0.05	172,172,197	0.0	0.0	0.0	0,0,0
278	0.04	0.10	0.05	172,172,197	0.0	0.0	0.0	0,0,0
279	0.04	0.09	0.05	172,172,197	0.0	0.0	0.0	0,0,0
280	0.04	0.09	0.05	172,172,197	0.0	0.0	0.0	0,0,0
281	0.04	0.09	0.05	172,172,197	0.0	0.0	0.0	0,0,0
282	0.03	0.08	0.04	172,172,197	0.0	0.0	0.0	0,0,0
283	0.04	0.09	0.05	172,172,197	0.0	0.0	0.0	0,0,0
284	0.04	0.09	0.04	172,172,197	0.0	0.0	0.0	0,0,0
285	0.04	0.09	0.04	172,172,197	0.0	0.0	0.0	0,0,0
286	0.04	0.08	0.05	172,172,197	0.0	0.0	0.0	0,0,0
287	0.03	0.07	0.04	172,172,197	0.0	0.0	0.0	0,0,0
288	0.03	0.07	0.04	172,172,197	0.0	0.0	0.0	0,0,0
289	0.03	0.07	0.04	172,172,197	0.0	0.0	0.0	0,0,0
290	0.04	0.08	0.05	172,172,197	0.0	0.0	0.0	0,0,0
291	0.04	0.09	0.05	172,172,197	0.0	0.0	0.0	0,0,0
292	0.03	0.06	0.04	172,172,197	0.0	0.0	0.0	0,0,0
293	0.05	0.10	0.06	172,172,197	0.0	0.0	0.0	0,0,0
294	0.04	0.08	0.05	172,172,197	0.0	0.0	0.0	0,0,0
295	0.05	0.11	0.07	172,172,197	0.0	0.0	0.0	0,0,0
296	0.05	0.10	0.07	172,172,197	0.0	0.0	0.0	0,0,0
297	0.05	0.10	0.07	172,172,197	0.0	0.0	0.0	0,0,0
298	0.06	0.12	0.07	172,172,197	0.0	0.0	0.0	0,0,0
299	0.05	0.09	0.06	172,172,197	0.0	0.0	0.0	0,0,0
300	0.05	0.11	0.06	172,172,197	0.0	0.0	0.0	0,0,0
301	0.05	0.13	0.06	172,172,197	0.0	0.0	0.0	0,0,0
302	0.05	0.12	0.06	172,172,197	0.0	0.0	0.0	0,0,0
303	0.05	0.13	0.07	172,172,197	0.0	0.0	0.0	0,0,0
304	0.05	0.10	0.06	172,172,197	0.0	0.0	0.0	0,0,0
305	0.06	0.14	0.08	172,172,197	0.0	0.0	0.0	0,0,0
306	0.06	0.12	0.08	172,172,197	0.0	0.0	0.0	0,0,0
307	0.07	0.14	0.09	172,172,197	0.0	0.0	0.0	0,0,0
308	0.07	0.14	0.09	172,172,197	0.0	0.0	0.0	0,0,0
309	0.06	0.12	0.08	172,172,197	0.0	0.0	0.0	0,0,0
310	0.07	0.14	0.08	172,172,197	0.0	0.0	0.0	0,0,0
311	0.05	0.10	0.07	172,172,197	0.0	0.0	0.0	0,0,0
312	0.06	0.13	0.07	172,172,197	0.0	0.0	0.0	0,0,0
313	0.05	0.13	0.06	172,172,197	0.0	0.0	0.0	0,0,0
314	0.05	0.13	0.07	172,172,197	0.0	0.0	0.0	0,0,0
315	0.06	0.13	0.07	172,172,197	0.0	0.0	0.0	0,0,0
316	0.05	0.11	0.07	172,172,197	0.0	0.0	0.0	0,0,0
317	0.07	0.14	0.08	172,172,197	0.0	0.0	0.0	0,0,0
318	0.06	0.12	0.08	172,172,197	0.0	0.0	0.0	0,0,0
319	0.07	0.14	0.09	172,172,197	0.0	0.0	0.0	0,0,0
320	0.07	0.14	0.09	172,172,197	0.0	0.0	0.0	0,0,0
321	0.06	0.12	0.08	172,172,197	0.0	0.0	0.0	0,0,0
322	0.06	0.14	0.08	172,172,197	0.0	0.0	0.0	0,0,0
323	0.05	0.10	0.07	172,172,197	0.0	0.0	0.0	0,0,0

324	0.06	0.13	0.07	172,172,197	0.0	0.0	0.0	0,0,0
325	0.05	0.13	0.06	172,172,197	0.0	0.0	0.0	0,0,0
326	0.05	0.13	0.06	172,172,197	0.0	0.0	0.0	0,0,0
327	0.06	0.12	0.07	172,172,197	0.0	0.0	0.0	0,0,0
328	0.05	0.10	0.07	172,172,197	0.0	0.0	0.0	0,0,0
329	0.06	0.14	0.08	172,172,197	0.0	0.0	0.0	0,0,0
330	0.06	0.12	0.08	172,172,197	0.0	0.0	0.0	0,0,0
331	0.07	0.13	0.08	172,172,197	0.0	0.0	0.0	0,0,0
332	0.07	0.14	0.08	172,172,197	0.0	0.0	0.0	0,0,0
333	0.06	0.12	0.08	172,172,197	0.0	0.0	0.0	0,0,0
334	0.06	0.14	0.08	172,172,197	0.0	0.0	0.0	0,0,0
335	0.05	0.10	0.06	172,172,197	0.0	0.0	0.0	0,0,0
336	0.05	0.12	0.07	172,172,197	0.0	0.0	0.0	0,0,0
337	0.05	0.12	0.06	172,172,197	0.0	0.0	0.0	0,0,0
338	0.05	0.13	0.06	172,172,197	0.0	0.0	0.0	0,0,0
339	0.05	0.11	0.06	172,172,197	0.0	0.0	0.0	0,0,0
340	0.04	0.09	0.06	172,172,197	0.0	0.0	0.0	0,0,0
341	0.05	0.11	0.07	172,172,197	0.0	0.0	0.0	0,0,0
342	0.05	0.10	0.06	172,172,197	0.0	0.0	0.0	0,0,0
343	0.05	0.10	0.06	172,172,197	0.0	0.0	0.0	0,0,0
344	0.05	0.11	0.07	172,172,197	0.0	0.0	0.0	0,0,0
345	0.04	0.08	0.05	172,172,197	0.0	0.0	0.0	0,0,0
346	0.05	0.10	0.06	172,172,197	0.0	0.0	0.0	0,0,0
347	0.03	0.06	0.04	172,172,197	0.0	0.0	0.0	0,0,0
348	0.04	0.09	0.05	172,172,197	0.0	0.0	0.0	0,0,0
349	0.04	0.10	0.05	172,172,197	0.0	0.0	0.0	0,0,0
350	0.04	0.08	0.05	172,172,197	0.0	0.0	0.0	0,0,0
351	0.05	0.13	0.06	172,172,197	0.0	0.0	0.0	0,0,0
352	0.05	0.12	0.06	172,172,197	0.0	0.0	0.0	0,0,0
353	0.06	0.15	0.07	172,172,197	0.0	0.0	0.0	0,0,0
354	0.06	0.14	0.07	172,172,197	0.0	0.0	0.0	0,0,0
355	0.06	0.14	0.08	172,172,197	0.0	0.0	0.0	0,0,0
356	0.06	0.15	0.08	172,172,197	0.0	0.0	0.0	0,0,0
357	0.05	0.13	0.07	172,172,197	0.0	0.0	0.0	0,0,0
358	0.05	0.14	0.07	172,172,197	0.0	0.0	0.0	0,0,0
359	0.05	0.14	0.07	172,172,197	0.0	0.0	0.0	0,0,0
360	0.05	0.13	0.07	172,172,197	0.0	0.0	0.0	0,0,0
361	0.06	0.16	0.08	172,172,197	0.0	0.0	0.0	0,0,0
362	0.06	0.14	0.07	172,172,197	0.0	0.0	0.0	0,0,0
363	0.07	0.18	0.09	172,172,197	0.0	0.0	0.0	0,0,0
364	0.07	0.16	0.09	172,172,197	0.0	0.0	0.0	0,0,0
365	0.07	0.18	0.09	172,172,197	0.0	0.0	0.0	0,0,0
366	0.07	0.18	0.09	172,172,197	0.0	0.0	0.0	0,0,0
367	0.07	0.16	0.09	172,172,197	0.0	0.0	0.0	0,0,0
368	0.07	0.18	0.09	172,172,197	0.0	0.0	0.0	0,0,0
369	0.06	0.14	0.08	172,172,197	0.0	0.0	0.0	0,0,0
370	0.06	0.16	0.08	172,172,197	0.0	0.0	0.0	0,0,0
371	0.05	0.14	0.07	172,172,197	0.0	0.0	0.0	0,0,0
372	0.05	0.14	0.07	172,172,197	0.0	0.0	0.0	0,0,0
373	0.06	0.16	0.08	172,172,197	0.0	0.0	0.0	0,0,0
374	0.06	0.14	0.08	172,172,197	0.0	0.0	0.0	0,0,0
375	0.07	0.18	0.09	172,172,197	0.0	0.0	0.0	0,0,0
376	0.07	0.16	0.09	172,172,197	0.0	0.0	0.0	0,0,0
377	0.07	0.18	0.09	172,172,197	0.0	0.0	0.0	0,0,0
378	0.07	0.18	0.09	172,172,197	0.0	0.0	0.0	0,0,0
379	0.07	0.16	0.09	172,172,197	0.0	0.0	0.0	0,0,0
380	0.07	0.18	0.09	172,172,197	0.0	0.0	0.0	0,0,0
381	0.06	0.14	0.08	172,172,197	0.0	0.0	0.0	0,0,0
382	0.06	0.16	0.08	172,172,197	0.0	0.0	0.0	0,0,0
383	0.05	0.14	0.07	172,172,197	0.0	0.0	0.0	0,0,0
384	0.05	0.14	0.07	172,172,197	0.0	0.0	0.0	0,0,0
385	0.06	0.16	0.08	172,172,197	0.0	0.0	0.0	0,0,0
386	0.06	0.14	0.08	172,172,197	0.0	0.0	0.0	0,0,0
387	0.07	0.17	0.09	172,172,197	0.0	0.0	0.0	0,0,0
388	0.07	0.16	0.09	172,172,197	0.0	0.0	0.0	0,0,0
389	0.07	0.18	0.09	172,172,197	0.0	0.0	0.0	0,0,0
390	0.07	0.18	0.09	172,172,197	0.0	0.0	0.0	0,0,0
391	0.07	0.16	0.09	172,172,197	0.0	0.0	0.0	0,0,0
392	0.07	0.18	0.09	172,172,197	0.0	0.0	0.0	0,0,0
393	0.06	0.14	0.07	172,172,197	0.0	0.0	0.0	0,0,0
394	0.06	0.16	0.07	172,172,197	0.0	0.0	0.0	0,0,0
395	0.05	0.13	0.06	172,172,197	0.0	0.0	0.0	0,0,0
396	0.05	0.14	0.06	172,172,197	0.0	0.0	0.0	0,0,0
397	0.05	0.14	0.07	172,172,197	0.0	0.0	0.0	0,0,0
398	0.05	0.13	0.07	172,172,197	0.0	0.0	0.0	0,0,0
399	0.06	0.15	0.07	172,172,197	0.0	0.0	0.0	0,0,0
400	0.06	0.14	0.07	172,172,197	0.0	0.0	0.0	0,0,0
401	0.06	0.14	0.07	172,172,197	0.0	0.0	0.0	0,0,0
402	0.06	0.14	0.07	172,172,197	0.0	0.0	0.0	0,0,0

403	0.05	0.12	0.06	172,172,197	0.0	0.0	0.0	0,0,0
404	0.05	0.13	0.06	172,172,197	0.0	0.0	0.0	0,0,0
405	0.04	0.08	0.05	172,172,197	0.0	0.0	0.0	0,0,0
406	0.04	0.10	0.05	172,172,197	0.0	0.0	0.0	0,0,0
407	0.03	0.08	0.04	172,172,197	0.0	0.0	0.0	0,0,0
408	0.03	0.07	0.03	172,172,197	0.0	0.0	0.0	0,0,0
409	0.03	0.10	0.04	172,172,197	0.0	0.0	0.0	0,0,0
410	0.03	0.10	0.04	172,172,197	0.0	0.0	0.0	0,0,0
411	0.04	0.12	0.05	172,172,197	0.0	0.0	0.0	0,0,0
412	0.04	0.12	0.05	172,172,197	0.0	0.0	0.0	0,0,0
413	0.04	0.12	0.05	172,172,197	0.0	0.0	0.0	0,0,0
414	0.04	0.12	0.05	172,172,197	0.0	0.0	0.0	0,0,0
415	0.04	0.11	0.05	172,172,197	0.0	0.0	0.0	0,0,0
416	0.03	0.11	0.04	172,172,197	0.0	0.0	0.0	0,0,0
417	0.03	0.11	0.04	172,172,197	0.0	0.0	0.0	0,0,0
418	0.03	0.11	0.04	172,172,197	0.0	0.0	0.0	0,0,0
419	0.04	0.12	0.05	172,172,197	0.0	0.0	0.0	0,0,0
420	0.04	0.12	0.05	172,172,197	0.0	0.0	0.0	0,0,0
421	0.04	0.14	0.05	172,172,197	0.0	0.0	0.0	0,0,0
422	0.04	0.13	0.06	172,172,197	0.0	0.0	0.0	0,0,0
423	0.05	0.14	0.06	172,172,197	0.0	0.0	0.0	0,0,0
424	0.05	0.14	0.06	172,172,197	0.0	0.0	0.0	0,0,0
425	0.04	0.13	0.06	172,172,197	0.0	0.0	0.0	0,0,0
426	0.04	0.14	0.05	172,172,197	0.0	0.0	0.0	0,0,0
427	0.04	0.12	0.05	172,172,197	0.0	0.0	0.0	0,0,0
428	0.04	0.12	0.05	172,172,197	0.0	0.0	0.0	0,0,0
429	0.03	0.11	0.04	172,172,197	0.0	0.0	0.0	0,0,0
430	0.03	0.11	0.04	172,172,197	0.0	0.0	0.0	0,0,0
431	0.04	0.12	0.05	172,172,197	0.0	0.0	0.0	0,0,0
432	0.04	0.12	0.05	172,172,197	0.0	0.0	0.0	0,0,0
433	0.04	0.14	0.05	172,172,197	0.0	0.0	0.0	0,0,0
434	0.04	0.13	0.06	172,172,197	0.0	0.0	0.0	0,0,0
435	0.05	0.14	0.06	172,172,197	0.0	0.0	0.0	0,0,0
436	0.05	0.14	0.06	172,172,197	0.0	0.0	0.0	0,0,0
437	0.04	0.13	0.06	172,172,197	0.0	0.0	0.0	0,0,0
438	0.04	0.13	0.05	172,172,197	0.0	0.0	0.0	0,0,0
439	0.04	0.12	0.05	172,172,197	0.0	0.0	0.0	0,0,0
440	0.04	0.12	0.05	172,172,197	0.0	0.0	0.0	0,0,0
441	0.03	0.11	0.04	172,172,197	0.0	0.0	0.0	0,0,0
442	0.03	0.11	0.04	172,172,197	0.0	0.0	0.0	0,0,0
443	0.04	0.12	0.05	172,172,197	0.0	0.0	0.0	0,0,0
444	0.04	0.12	0.05	172,172,197	0.0	0.0	0.0	0,0,0
445	0.04	0.13	0.05	172,172,197	0.0	0.0	0.0	0,0,0
446	0.04	0.13	0.06	172,172,197	0.0	0.0	0.0	0,0,0
447	0.04	0.14	0.06	172,172,197	0.0	0.0	0.0	0,0,0
448	0.05	0.14	0.06	172,172,197	0.0	0.0	0.0	0,0,0
449	0.04	0.13	0.06	172,172,197	0.0	0.0	0.0	0,0,0
450	0.04	0.14	0.05	172,172,197	0.0	0.0	0.0	0,0,0
451	0.04	0.12	0.05	172,172,197	0.0	0.0	0.0	0,0,0
452	0.04	0.12	0.05	172,172,197	0.0	0.0	0.0	0,0,0
453	0.03	0.11	0.04	172,172,197	0.0	0.0	0.0	0,0,0
454	0.03	0.11	0.04	172,172,197	0.0	0.0	0.0	0,0,0
455	0.03	0.11	0.04	172,172,197	0.0	0.0	0.0	0,0,0
456	0.04	0.11	0.05	172,172,197	0.0	0.0	0.0	0,0,0
457	0.04	0.12	0.05	172,172,197	0.0	0.0	0.0	0,0,0
458	0.04	0.12	0.05	172,172,197	0.0	0.0	0.0	0,0,0
459	0.04	0.12	0.05	172,172,197	0.0	0.0	0.0	0,0,0
460	0.04	0.12	0.05	172,172,197	0.0	0.0	0.0	0,0,0
461	0.03	0.10	0.04	172,172,197	0.0	0.0	0.0	0,0,0
462	0.03	0.10	0.04	172,172,197	0.0	0.0	0.0	0,0,0
463	0.03	0.07	0.03	172,172,197	0.0	0.0	0.0	0,0,0
464	0.03	0.08	0.04	172,172,197	0.0	0.0	0.0	0,0,0
465	0.02	0.05	0.03	176,172,199	0.0	0.0	0.0	0,0,0
466	0.02	0.05	0.03	176,172,199	0.0	0.0	0.0	0,0,0
467	0.01	0.06	0.02	172,172,197	0.0	0.0	0.0	0,0,0
468	0.01	0.06	0.02	172,172,197	0.0	0.0	0.0	0,0,0
469	0.02	0.07	0.02	172,172,197	0.0	0.0	0.0	0,0,0
470	0.01	0.07	0.02	172,172,197	0.0	0.0	0.0	0,0,0
471	0.02	0.07	0.02	172,172,197	0.0	0.0	0.0	0,0,0
472	0.01	0.07	0.02	172,172,197	0.0	0.0	0.0	0,0,0
473	0.01	0.07	0.02	172,172,197	0.0	0.0	0.0	0,0,0
474	0.01	0.07	0.02	172,172,197	0.0	0.0	0.0	0,0,0
475	0.01	0.06	0.02	172,172,197	0.0	0.0	0.0	0,0,0
476	0.01	0.06	0.02	172,172,197	0.0	0.0	0.0	0,0,0
477	0.01	0.07	0.02	172,172,197	0.0	0.0	0.0	0,0,0
478	0.01	0.07	0.02	172,172,197	0.0	0.0	0.0	0,0,0
479	0.01	0.07	0.02	172,172,197	0.0	0.0	0.0	0,0,0
480	0.01	0.08	0.02	172,172,197	0.0	0.0	0.0	0,0,0
481	0.02	0.08	0.02	172,172,197	0.0	0.0	0.0	0,0,0

482	0.02	0.08	0.02	172,172,197	0.0	0.0	0.0	0,0,0
483	0.02	0.07	0.02	172,172,197	0.0	0.0	0.0	0,0,0
484	0.02	0.07	0.02	172,172,197	0.0	0.0	0.0	0,0,0
485	0.01	0.07	0.02	172,172,197	0.0	0.0	0.0	0,0,0
486	0.01	0.07	0.02	172,172,197	0.0	0.0	0.0	0,0,0
487	0.01	0.07	0.02	172,172,197	0.0	0.0	0.0	0,0,0
488	0.01	0.07	0.02	172,172,197	0.0	0.0	0.0	0,0,0
489	0.01	0.07	0.02	172,172,197	0.0	0.0	0.0	0,0,0
490	0.01	0.07	0.02	172,172,197	0.0	0.0	0.0	0,0,0
491	0.01	0.07	0.02	172,172,197	0.0	0.0	0.0	0,0,0
492	0.01	0.07	0.02	172,172,197	0.0	0.0	0.0	0,0,0
493	0.02	0.08	0.02	172,172,197	0.0	0.0	0.0	0,0,0
494	0.02	0.08	0.02	172,172,197	0.0	0.0	0.0	0,0,0
495	0.01	0.07	0.02	172,172,197	0.0	0.0	0.0	0,0,0
496	0.01	0.07	0.02	172,172,197	0.0	0.0	0.0	0,0,0
497	0.01	0.07	0.02	172,172,197	0.0	0.0	0.0	0,0,0
498	0.01	0.07	0.02	172,172,197	0.0	0.0	0.0	0,0,0
499	0.01	0.07	0.02	172,172,197	0.0	0.0	0.0	0,0,0
500	0.01	0.06	0.01	176,172,197	0.0	0.0	0.0	0,0,0
501	0.01	0.07	0.02	172,172,197	0.0	0.0	0.0	0,0,0
502	0.01	0.07	0.02	172,172,197	0.0	0.0	0.0	0,0,0
503	0.01	0.07	0.02	172,172,197	0.0	0.0	0.0	0,0,0
504	0.02	0.07	0.02	172,172,197	0.0	0.0	0.0	0,0,0
505	0.02	0.08	0.02	172,172,197	0.0	0.0	0.0	0,0,0
506	0.02	0.08	0.02	172,172,197	0.0	0.0	0.0	0,0,0
507	0.01	0.08	0.02	172,172,197	0.0	0.0	0.0	0,0,0
508	0.01	0.07	0.02	172,172,197	0.0	0.0	0.0	0,0,0
509	0.01	0.07	0.02	172,172,197	0.0	0.0	0.0	0,0,0
510	0.01	0.07	0.02	172,172,197	0.0	0.0	0.0	0,0,0
511	0.01	0.07	0.02	172,172,197	0.0	0.0	0.0	0,0,0
512	0.01	0.06	0.02	176,172,199	0.0	0.0	0.0	0,0,0
513	0.01	0.06	0.02	172,172,197	0.0	0.0	0.0	0,0,0
514	0.01	0.07	0.02	172,172,197	0.0	0.0	0.0	0,0,0
515	0.01	0.07	0.02	172,172,197	0.0	0.0	0.0	0,0,0
516	0.01	0.07	0.02	172,172,197	0.0	0.0	0.0	0,0,0
517	0.01	0.07	0.02	172,172,197	0.0	0.0	0.0	0,0,0
518	0.01	0.07	0.02	172,172,197	0.0	0.0	0.0	0,0,0
519	0.01	0.06	0.02	172,172,197	0.0	0.0	0.0	0,0,0
520	0.01	0.06	0.02	172,172,199	0.0	0.0	0.0	0,0,0
521	0.02	0.05	0.03	176,172,199	0.0	0.0	0.0	0,0,0
522	0.02	0.05	0.03	176,172,199	0.0	0.0	0.0	0,0,0
523	0.03	0.08	0.04	172,172,197	0.0	0.0	0.0	0,0,0
524	0.03	0.08	0.04	172,172,197	0.0	0.0	0.0	0,0,0
525	0.01	0.04	0.02	176,172,199	0.0	0.0	0.0	0,0,0
526	0.01	0.05	0.02	172,172,197	0.0	0.0	0.0	0,0,0
527	0.01	0.04	0.01	176,172,199	0.0	0.0	0.0	0,0,0
528	0.01	0.05	0.01	172,172,197	0.0	0.0	0.0	0,0,0
529	9.37e-03	0.04	0.01	176,172,199	0.0	0.0	0.0	0,0,0
530	9.79e-03	0.05	0.01	172,172,197	0.0	0.0	0.0	0,0,0
531	9.12e-03	0.05	0.01	176,172,199	0.0	0.0	0.0	0,0,0
532	9.66e-03	0.05	0.01	172,172,197	0.0	0.0	0.0	0,0,0
533	9.52e-03	0.05	0.01	176,172,199	0.0	0.0	0.0	0,0,0
534	9.72e-03	0.05	0.01	172,172,197	0.0	0.0	0.0	0,0,0
535	7.85e-03	0.05	0.01	162,172,199	0.0	0.0	0.0	0,0,0
536	9.08e-03	0.05	0.01	172,172,197	0.0	0.0	0.0	0,0,0
537	7.03e-03	0.05	9.22e-03	162,172,199	0.0	0.0	0.0	0,0,0
538	8.83e-03	0.05	0.01	172,172,197	0.0	0.0	0.0	0,0,0
539	6.57e-03	0.05	8.58e-03	162,172,199	0.0	0.0	0.0	0,0,0
540	8.63e-03	0.05	0.01	172,172,197	0.0	0.0	0.0	0,0,0
541	6.37e-03	0.05	8.32e-03	162,172,199	0.0	0.0	0.0	0,0,0
542	8.43e-03	0.05	0.01	172,172,197	0.0	0.0	0.0	0,0,0
543	6.52e-03	0.05	8.54e-03	162,172,199	0.0	0.0	0.0	0,0,0
544	8.25e-03	0.05	0.01	172,172,197	0.0	0.0	0.0	0,0,0
545	7.65e-03	0.05	9.87e-03	176,172,199	0.0	0.0	0.0	0,0,0
546	8.36e-03	0.05	0.01	172,172,197	0.0	0.0	0.0	0,0,0
547	6.45e-03	0.05	8.49e-03	172,172,197	0.0	0.0	0.0	0,0,0
548	7.70e-03	0.05	0.01	172,172,197	0.0	0.0	0.0	0,0,0
549	6.60e-03	0.05	8.69e-03	172,172,197	0.0	0.0	0.0	0,0,0
550	7.30e-03	0.05	9.61e-03	172,172,197	0.0	0.0	0.0	0,0,0
551	6.80e-03	0.05	8.94e-03	172,172,197	0.0	0.0	0.0	0,0,0
552	6.91e-03	0.05	9.08e-03	172,172,197	0.0	0.0	0.0	0,0,0
553	7.04e-03	0.05	9.27e-03	172,172,197	0.0	0.0	0.0	0,0,0
554	6.65e-03	0.05	8.77e-03	172,172,197	0.0	0.0	0.0	0,0,0
555	7.27e-03	0.05	9.59e-03	172,172,197	0.0	0.0	0.0	0,0,0
556	6.59e-03	0.05	8.69e-03	172,172,197	0.0	0.0	0.0	0,0,0
557	8.22e-03	0.06	0.01	172,172,197	0.0	0.0	0.0	0,0,0
558	8.04e-03	0.05	0.01	176,172,199	0.0	0.0	0.0	0,0,0
559	7.96e-03	0.05	0.01	172,172,197	0.0	0.0	0.0	0,0,0
560	6.48e-03	0.05	8.48e-03	162,172,199	0.0	0.0	0.0	0,0,0

561	8.09e-03	0.05	0.01	172,172,197	0.0	0.0	0.0	0,0,0
562	6.22e-03	0.05	8.14e-03	162,172,199	0.0	0.0	0.0	0,0,0
563	8.27e-03	0.05	0.01	172,172,197	0.0	0.0	0.0	0,0,0
564	6.37e-03	0.05	8.32e-03	162,172,199	0.0	0.0	0.0	0,0,0
565	8.45e-03	0.05	0.01	172,172,197	0.0	0.0	0.0	0,0,0
566	6.77e-03	0.05	8.87e-03	162,172,199	0.0	0.0	0.0	0,0,0
567	8.68e-03	0.05	0.01	172,172,197	0.0	0.0	0.0	0,0,0
568	7.55e-03	0.05	9.91e-03	162,172,199	0.0	0.0	0.0	0,0,0
569	9.53e-03	0.05	0.01	172,172,197	0.0	0.0	0.0	0,0,0
570	9.53e-03	0.05	0.01	176,172,199	0.0	0.0	0.0	0,0,0
571	9.27e-03	0.05	0.01	172,172,197	0.0	0.0	0.0	0,0,0
572	8.75e-03	0.05	0.01	162,172,199	0.0	0.0	0.0	0,0,0
573	9.39e-03	0.05	0.01	172,172,197	0.0	0.0	0.0	0,0,0
574	9.03e-03	0.04	0.01	176,172,199	0.0	0.0	0.0	0,0,0
575	9.69e-03	0.05	0.01	172,172,197	0.0	0.0	0.0	0,0,0
576	9.81e-03	0.04	0.01	176,172,199	0.0	0.0	0.0	0,0,0
577	0.01	0.05	0.02	176,172,199	0.0	0.0	0.0	0,0,0
578	0.01	0.04	0.02	176,172,199	0.0	0.0	0.0	0,0,0
579	0.03	0.08	0.04	172,172,197	0.0	0.0	0.0	0,0,0
580	0.03	0.08	0.04	172,172,197	0.0	0.0	0.0	0,0,0
581	0.05	0.11	0.06	172,172,197	0.0	0.0	0.0	0,0,0
582	0.05	0.14	0.06	172,172,197	0.0	0.0	0.0	0,0,0
583	0.04	0.10	0.05	172,172,197	0.0	0.0	0.0	0,0,0
584	0.03	0.10	0.05	172,172,197	0.0	0.0	0.0	0,0,0
585	0.03	0.08	0.04	172,172,197	0.0	0.0	0.0	0,0,0
586	0.03	0.09	0.04	172,172,197	0.0	0.0	0.0	0,0,0
587	0.03	0.09	0.04	172,172,197	0.0	0.0	0.0	0,0,0
588	0.03	0.09	0.04	172,172,197	0.0	0.0	0.0	0,0,0
589	0.03	0.09	0.04	172,172,197	0.0	0.0	0.0	0,0,0
590	0.03	0.09	0.04	172,172,197	0.0	0.0	0.0	0,0,0
591	0.03	0.09	0.04	172,172,197	0.0	0.0	0.0	0,0,0
592	0.03	0.09	0.04	172,172,197	0.0	0.0	0.0	0,0,0
593	0.03	0.09	0.04	172,172,197	0.0	0.0	0.0	0,0,0
594	0.03	0.09	0.04	172,172,197	0.0	0.0	0.0	0,0,0
595	0.03	0.09	0.04	172,172,197	0.0	0.0	0.0	0,0,0
596	0.03	0.09	0.04	172,172,197	0.0	0.0	0.0	0,0,0
597	0.03	0.09	0.04	172,172,197	0.0	0.0	0.0	0,0,0
598	0.03	0.09	0.04	172,172,197	0.0	0.0	0.0	0,0,0
599	0.03	0.09	0.04	172,172,197	0.0	0.0	0.0	0,0,0
600	0.03	0.09	0.04	172,172,197	0.0	0.0	0.0	0,0,0
601	0.03	0.09	0.04	172,172,197	0.0	0.0	0.0	0,0,0
602	0.03	0.09	0.04	172,172,197	0.0	0.0	0.0	0,0,0
603	0.03	0.09	0.04	172,172,197	0.0	0.0	0.0	0,0,0
604	0.03	0.09	0.04	172,172,197	0.0	0.0	0.0	0,0,0
605	0.03	0.09	0.04	172,172,197	0.0	0.0	0.0	0,0,0
606	0.03	0.09	0.04	172,172,197	0.0	0.0	0.0	0,0,0
607	0.03	0.09	0.04	172,172,197	0.0	0.0	0.0	0,0,0
608	0.03	0.09	0.04	172,172,197	0.0	0.0	0.0	0,0,0
609	0.03	0.09	0.04	172,172,197	0.0	0.0	0.0	0,0,0
610	0.03	0.09	0.04	172,172,197	0.0	0.0	0.0	0,0,0
611	0.03	0.09	0.04	172,172,197	0.0	0.0	0.0	0,0,0
612	0.03	0.09	0.04	172,172,197	0.0	0.0	0.0	0,0,0
613	0.03	0.09	0.04	172,172,197	0.0	0.0	0.0	0,0,0
614	0.03	0.09	0.04	172,172,197	0.0	0.0	0.0	0,0,0
615	0.03	0.09	0.04	172,172,197	0.0	0.0	0.0	0,0,0
616	0.03	0.09	0.04	172,172,197	0.0	0.0	0.0	0,0,0
617	0.03	0.09	0.04	172,172,197	0.0	0.0	0.0	0,0,0
618	0.03	0.09	0.04	172,172,197	0.0	0.0	0.0	0,0,0
619	0.03	0.09	0.04	172,172,197	0.0	0.0	0.0	0,0,0
620	0.03	0.09	0.04	172,172,197	0.0	0.0	0.0	0,0,0
621	0.03	0.09	0.04	172,172,197	0.0	0.0	0.0	0,0,0
622	0.03	0.09	0.04	172,172,197	0.0	0.0	0.0	0,0,0
623	0.03	0.09	0.04	172,172,197	0.0	0.0	0.0	0,0,0
624	0.03	0.08	0.04	172,172,197	0.0	0.0	0.0	0,0,0
625	0.03	0.09	0.04	172,172,197	0.0	0.0	0.0	0,0,0
626	0.03	0.08	0.04	172,172,197	0.0	0.0	0.0	0,0,0
627	0.03	0.09	0.04	172,172,197	0.0	0.0	0.0	0,0,0
628	0.03	0.08	0.04	172,172,197	0.0	0.0	0.0	0,0,0
629	0.03	0.09	0.04	172,172,197	0.0	0.0	0.0	0,0,0
630	0.03	0.08	0.04	172,172,197	0.0	0.0	0.0	0,0,0
631	0.03	0.09	0.04	172,172,197	0.0	0.0	0.0	0,0,0
632	0.03	0.08	0.04	172,172,197	0.0	0.0	0.0	0,0,0
633	0.03	0.09	0.04	172,172,197	0.0	0.0	0.0	0,0,0
634	0.03	0.08	0.04	172,172,197	0.0	0.0	0.0	0,0,0
635	0.03	0.10	0.05	172,172,197	0.0	0.0	0.0	0,0,0
636	0.04	0.10	0.05	172,172,197	0.0	0.0	0.0	0,0,0
637	0.05	0.14	0.06	172,172,197	0.0	0.0	0.0	0,0,0
638	0.05	0.11	0.06	172,172,197	0.0	0.0	0.0	0,0,0
639	0.04	0.08	0.05	172,172,197	0.0	0.0	0.0	0,0,0

640	0.05	0.10	0.06	172,172,197	0.0	0.0	0.0	0,0,0
641	0.04	0.09	0.05	172,172,197	0.0	0.0	0.0	0,0,0
642	0.04	0.08	0.05	172,172,197	0.0	0.0	0.0	0,0,0
643	0.04	0.09	0.05	172,172,197	0.0	0.0	0.0	0,0,0
644	0.04	0.08	0.05	172,172,197	0.0	0.0	0.0	0,0,0
645	0.04	0.09	0.05	172,172,197	0.0	0.0	0.0	0,0,0
646	0.04	0.08	0.05	172,172,197	0.0	0.0	0.0	0,0,0
647	0.04	0.09	0.05	172,172,197	0.0	0.0	0.0	0,0,0
648	0.04	0.08	0.05	172,172,197	0.0	0.0	0.0	0,0,0
649	0.04	0.09	0.05	172,172,197	0.0	0.0	0.0	0,0,0
650	0.04	0.08	0.05	172,172,197	0.0	0.0	0.0	0,0,0
651	0.04	0.09	0.05	172,172,197	0.0	0.0	0.0	0,0,0
652	0.04	0.08	0.05	172,172,197	0.0	0.0	0.0	0,0,0
653	0.04	0.09	0.05	172,172,197	0.0	0.0	0.0	0,0,0
654	0.04	0.08	0.05	172,172,197	0.0	0.0	0.0	0,0,0
655	0.04	0.09	0.05	172,172,197	0.0	0.0	0.0	0,0,0
656	0.04	0.08	0.05	172,172,197	0.0	0.0	0.0	0,0,0
657	0.04	0.09	0.05	172,172,197	0.0	0.0	0.0	0,0,0
658	0.04	0.08	0.05	172,172,197	0.0	0.0	0.0	0,0,0
659	0.04	0.09	0.05	172,172,197	0.0	0.0	0.0	0,0,0
660	0.04	0.08	0.05	172,172,197	0.0	0.0	0.0	0,0,0
661	0.04	0.09	0.05	172,172,197	0.0	0.0	0.0	0,0,0
662	0.04	0.08	0.05	172,172,197	0.0	0.0	0.0	0,0,0
663	0.04	0.08	0.05	172,172,197	0.0	0.0	0.0	0,0,0
664	0.04	0.09	0.05	172,172,197	0.0	0.0	0.0	0,0,0
665	0.04	0.09	0.05	172,172,197	0.0	0.0	0.0	0,0,0
666	0.04	0.09	0.05	172,172,197	0.0	0.0	0.0	0,0,0
667	0.04	0.09	0.05	172,172,197	0.0	0.0	0.0	0,0,0
668	0.04	0.09	0.05	172,172,197	0.0	0.0	0.0	0,0,0
669	0.04	0.09	0.05	172,172,197	0.0	0.0	0.0	0,0,0
670	0.04	0.09	0.05	172,172,197	0.0	0.0	0.0	0,0,0
671	0.04	0.09	0.05	172,172,197	0.0	0.0	0.0	0,0,0
672	0.04	0.08	0.05	172,172,197	0.0	0.0	0.0	0,0,0
673	0.04	0.08	0.05	172,172,197	0.0	0.0	0.0	0,0,0
674	0.04	0.09	0.05	172,172,197	0.0	0.0	0.0	0,0,0
675	0.04	0.08	0.05	172,172,197	0.0	0.0	0.0	0,0,0
676	0.04	0.09	0.05	172,172,197	0.0	0.0	0.0	0,0,0
677	0.04	0.08	0.05	172,172,197	0.0	0.0	0.0	0,0,0
678	0.04	0.09	0.05	172,172,197	0.0	0.0	0.0	0,0,0
679	0.04	0.08	0.05	172,172,197	0.0	0.0	0.0	0,0,0
680	0.04	0.09	0.05	172,172,197	0.0	0.0	0.0	0,0,0
681	0.04	0.08	0.05	172,172,197	0.0	0.0	0.0	0,0,0
682	0.04	0.09	0.05	172,172,197	0.0	0.0	0.0	0,0,0
683	0.04	0.08	0.05	172,172,197	0.0	0.0	0.0	0,0,0
684	0.04	0.08	0.05	172,172,197	0.0	0.0	0.0	0,0,0
685	0.04	0.08	0.05	172,172,197	0.0	0.0	0.0	0,0,0
686	0.04	0.09	0.05	172,172,197	0.0	0.0	0.0	0,0,0
687	0.04	0.08	0.05	172,172,197	0.0	0.0	0.0	0,0,0
688	0.04	0.09	0.05	172,172,197	0.0	0.0	0.0	0,0,0
689	0.04	0.08	0.05	172,172,197	0.0	0.0	0.0	0,0,0
690	0.04	0.09	0.05	172,172,197	0.0	0.0	0.0	0,0,0
691	0.04	0.08	0.05	172,172,197	0.0	0.0	0.0	0,0,0
692	0.04	0.08	0.05	172,172,197	0.0	0.0	0.0	0,0,0
693	0.04	0.08	0.05	172,172,197	0.0	0.0	0.0	0,0,0
694	0.04	0.09	0.05	172,172,197	0.0	0.0	0.0	0,0,0
695	0.05	0.10	0.06	172,172,197	0.0	0.0	0.0	0,0,0
696	0.04	0.08	0.05	172,172,197	0.0	0.0	0.0	0,0,0
1318	0.04	0.06	0.05	157,172,197	0.0	0.0	0.0	0,0,0
1319	0.01	0.02	0.02	157,176,197	0.0	0.0	0.0	0,0,0
1320	0.03	0.05	0.04	172,176,197	0.0	0.0	0.0	0,0,0
1321	0.01	0.02	0.02	172,176,197	0.0	0.0	0.0	0,0,0
1322	0.03	0.05	0.04	176,176,199	0.0	0.0	0.0	0,0,0
1323	0.01	0.02	0.02	172,176,197	0.0	0.0	0.0	0,0,0
1324	0.03	0.05	0.04	172,176,197	0.0	0.0	0.0	0,0,0
1325	0.01	0.02	0.02	157,176,197	0.0	0.0	0.0	0,0,0
1326	0.03	0.05	0.04	176,176,199	0.0	0.0	0.0	0,0,0
1327	0.01	0.03	0.02	172,176,197	0.0	0.0	0.0	0,0,0
1328	0.03	0.05	0.04	157,176,197	0.0	0.0	0.0	0,0,0
1329	0.01	0.03	0.02	161,176,199	0.0	0.0	0.0	0,0,0
1330	0.02	0.05	0.03	176,176,199	0.0	0.0	0.0	0,0,0
1331	0.01	0.03	0.02	161,176,199	0.0	0.0	0.0	0,0,0
1332	0.02	0.05	0.03	176,176,199	0.0	0.0	0.0	0,0,0
1333	0.01	0.03	0.02	161,176,199	0.0	0.0	0.0	0,0,0
1334	0.02	0.05	0.03	176,176,199	0.0	0.0	0.0	0,0,0
1335	0.01	0.03	0.02	161,176,199	0.0	0.0	0.0	0,0,0
1336	0.02	0.05	0.03	172,176,197	0.0	0.0	0.0	0,0,0
1337	0.01	0.03	0.02	161,176,199	0.0	0.0	0.0	0,0,0
1338	0.02	0.05	0.03	176,176,199	0.0	0.0	0.0	0,0,0
1339	0.01	0.03	0.02	176,176,199	0.0	0.0	0.0	0,0,0

1340	0.02	0.05	0.03	157,176,197	0.0	0.0	0.0	0,0,0
1341	0.01	0.04	0.02	176,176,199	0.0	0.0	0.0	0,0,0
1342	0.02	0.04	0.02	161,176,199	0.0	0.0	0.0	0,0,0
1343	0.01	0.04	0.02	161,176,199	0.0	0.0	0.0	0,0,0
1344	0.02	0.04	0.02	157,176,197	0.0	0.0	0.0	0,0,0
1345	0.01	0.04	0.02	172,176,197	0.0	0.0	0.0	0,0,0
1346	0.02	0.04	0.02	176,176,199	0.0	0.0	0.0	0,0,0
1347	0.01	0.04	0.02	161,176,199	0.0	0.0	0.0	0,0,0
1348	0.02	0.04	0.02	172,176,197	0.0	0.0	0.0	0,0,0
1349	0.01	0.04	0.02	161,176,199	0.0	0.0	0.0	0,0,0
1350	0.02	0.04	0.02	176,176,199	0.0	0.0	0.0	0,0,0
1351	0.02	0.04	0.02	157,176,197	0.0	0.0	0.0	0,0,0
1352	0.01	0.04	0.02	176,176,199	0.0	0.0	0.0	0,0,0
1353	0.02	0.05	0.03	176,176,199	0.0	0.0	0.0	0,0,0
1354	0.01	0.03	0.02	161,176,199	0.0	0.0	0.0	0,0,0
1355	0.02	0.05	0.03	172,176,197	0.0	0.0	0.0	0,0,0
1356	0.01	0.03	0.02	161,176,199	0.0	0.0	0.0	0,0,0
1357	0.02	0.05	0.03	176,176,199	0.0	0.0	0.0	0,0,0
1358	0.01	0.03	0.02	161,176,199	0.0	0.0	0.0	0,0,0
1359	0.02	0.05	0.03	176,176,199	0.0	0.0	0.0	0,0,0
1360	0.01	0.03	0.02	161,176,199	0.0	0.0	0.0	0,0,0
1361	0.02	0.05	0.03	176,176,199	0.0	0.0	0.0	0,0,0
1362	0.01	0.03	0.02	161,176,199	0.0	0.0	0.0	0,0,0
1363	0.03	0.05	0.03	157,176,197	0.0	0.0	0.0	0,0,0
1364	0.01	0.03	0.02	172,176,197	0.0	0.0	0.0	0,0,0
1365	0.03	0.05	0.04	176,176,199	0.0	0.0	0.0	0,0,0
1366	0.01	0.02	0.02	157,176,197	0.0	0.0	0.0	0,0,0
1367	0.03	0.05	0.04	172,176,197	0.0	0.0	0.0	0,0,0
1368	0.01	0.02	0.02	172,176,197	0.0	0.0	0.0	0,0,0
1369	0.03	0.04	0.04	172,176,199	0.0	0.0	0.0	0,0,0
1370	0.01	0.02	0.02	172,176,197	0.0	0.0	0.0	0,0,0
1371	0.03	0.04	0.04	172,176,197	0.0	0.0	0.0	0,0,0
1372	0.01	0.02	0.02	157,176,197	0.0	0.0	0.0	0,0,0
1373	0.03	0.05	0.04	157,172,197	0.0	0.0	0.0	0,0,0
1374	0.03	0.05	0.04	172,172,197	0.0	0.0	0.0	0,0,0
1375	0.01	0.02	0.02	161,162,199	0.0	0.0	0.0	0,0,0
1376	0.03	0.04	0.03	172,172,197	0.0	0.0	0.0	0,0,0
1377	0.01	0.02	0.02	161,161,199	0.0	0.0	0.0	0,0,0
1378	0.03	0.04	0.03	172,172,197	0.0	0.0	0.0	0,0,0
1379	0.01	0.02	0.02	161,161,199	0.0	0.0	0.0	0,0,0
1380	0.03	0.04	0.03	172,172,197	0.0	0.0	0.0	0,0,0
1381	0.01	0.02	0.02	161,161,199	0.0	0.0	0.0	0,0,0
1382	0.03	0.04	0.03	176,176,199	0.0	0.0	0.0	0,0,0
1383	0.01	0.02	0.02	176,176,199	0.0	0.0	0.0	0,0,0
1384	0.02	0.03	0.03	157,157,197	0.0	0.0	0.0	0,0,0
1385	0.01	0.02	0.02	176,176,199	0.0	0.0	0.0	0,0,0
1386	0.02	0.03	0.03	172,176,197	0.0	0.0	0.0	0,0,0
1387	0.01	0.02	0.02	161,176,199	0.0	0.0	0.0	0,0,0
1388	0.02	0.03	0.03	172,172,197	0.0	0.0	0.0	0,0,0
1389	0.01	0.02	0.02	161,176,199	0.0	0.0	0.0	0,0,0
1390	0.02	0.03	0.03	172,172,197	0.0	0.0	0.0	0,0,0
1391	0.01	0.02	0.02	161,176,199	0.0	0.0	0.0	0,0,0
1392	0.02	0.04	0.03	172,172,197	0.0	0.0	0.0	0,0,0
1393	0.01	0.03	0.02	162,176,199	0.0	0.0	0.0	0,0,0
1394	0.02	0.03	0.02	176,176,199	0.0	0.0	0.0	0,0,0
1395	0.01	0.03	0.02	176,176,199	0.0	0.0	0.0	0,0,0
1396	0.01	0.03	0.02	157,157,197	0.0	0.0	0.0	0,0,0
1397	0.01	0.03	0.02	176,176,199	0.0	0.0	0.0	0,0,0
1398	0.01	0.03	0.02	157,176,197	0.0	0.0	0.0	0,0,0
1399	0.01	0.03	0.02	161,176,199	0.0	0.0	0.0	0,0,0
1400	0.01	0.03	0.02	157,176,197	0.0	0.0	0.0	0,0,0
1401	0.01	0.03	0.02	161,176,199	0.0	0.0	0.0	0,0,0
1402	0.01	0.03	0.02	172,176,197	0.0	0.0	0.0	0,0,0
1403	0.01	0.03	0.02	161,176,199	0.0	0.0	0.0	0,0,0
1404	0.01	0.03	0.02	161,176,199	0.0	0.0	0.0	0,0,0
1405	0.01	0.03	0.02	161,176,199	0.0	0.0	0.0	0,0,0
1406	0.01	0.03	0.02	176,176,199	0.0	0.0	0.0	0,0,0
1407	0.01	0.03	0.02	176,176,199	0.0	0.0	0.0	0,0,0
1408	0.01	0.03	0.02	176,176,199	0.0	0.0	0.0	0,0,0
1409	0.02	0.03	0.02	176,176,199	0.0	0.0	0.0	0,0,0
1410	0.01	0.03	0.02	161,176,199	0.0	0.0	0.0	0,0,0
1411	0.02	0.03	0.02	172,172,197	0.0	0.0	0.0	0,0,0
1412	0.01	0.02	0.02	161,176,199	0.0	0.0	0.0	0,0,0
1413	0.02	0.03	0.02	172,172,197	0.0	0.0	0.0	0,0,0
1414	0.01	0.02	0.02	161,176,199	0.0	0.0	0.0	0,0,0
1415	0.02	0.03	0.02	172,172,197	0.0	0.0	0.0	0,0,0
1416	0.01	0.02	0.02	161,176,199	0.0	0.0	0.0	0,0,0
1417	0.02	0.03	0.02	172,176,197	0.0	0.0	0.0	0,0,0
1418	0.01	0.02	0.02	176,176,199	0.0	0.0	0.0	0,0,0

1419	0.02	0.03	0.03	157,157,197	0.0	0.0	0.0	0,0,0
1420	0.01	0.02	0.02	176,176,199	0.0	0.0	0.0	0,0,0
1421	0.02	0.03	0.03	176,176,199	0.0	0.0	0.0	0,0,0
1422	0.01	0.02	0.02	161,161,199	0.0	0.0	0.0	0,0,0
1423	0.02	0.03	0.03	172,172,197	0.0	0.0	0.0	0,0,0
1424	0.01	0.02	0.02	161,161,199	0.0	0.0	0.0	0,0,0
1425	0.02	0.03	0.03	172,172,197	0.0	0.0	0.0	0,0,0
1426	0.01	0.02	0.02	161,161,199	0.0	0.0	0.0	0,0,0
1427	0.02	0.03	0.03	172,172,197	0.0	0.0	0.0	0,0,0
1428	0.01	0.02	0.02	161,162,199	0.0	0.0	0.0	0,0,0
1429	0.03	0.04	0.04	172,172,197	0.0	0.0	0.0	0,0,0
1430	0.03	0.04	0.04	176,176,199	0.0	0.0	0.0	0,0,0
1431	0.01	0.02	0.02	161,162,199	0.0	0.0	0.0	0,0,0
1432	0.02	0.03	0.03	176,176,199	0.0	0.0	0.0	0,0,0
1433	0.01	0.02	0.02	176,162,199	0.0	0.0	0.0	0,0,0
1434	0.02	0.04	0.03	176,176,199	0.0	0.0	0.0	0,0,0
1435	0.01	0.02	0.02	172,161,197	0.0	0.0	0.0	0,0,0
1436	0.02	0.04	0.03	176,176,199	0.0	0.0	0.0	0,0,0
1437	0.01	0.02	0.02	172,161,197	0.0	0.0	0.0	0,0,0
1438	0.02	0.04	0.03	176,176,199	0.0	0.0	0.0	0,0,0
1439	0.01	0.02	0.02	176,162,199	0.0	0.0	0.0	0,0,0
1440	0.02	0.03	0.03	161,161,199	0.0	0.0	0.0	0,0,0
1441	0.01	0.02	0.02	172,162,197	0.0	0.0	0.0	0,0,0
1442	0.02	0.03	0.03	176,176,199	0.0	0.0	0.0	0,0,0
1443	0.01	0.02	0.02	172,162,197	0.0	0.0	0.0	0,0,0
1444	0.02	0.03	0.02	176,176,199	0.0	0.0	0.0	0,0,0
1445	0.01	0.02	0.02	172,162,197	0.0	0.0	0.0	0,0,0
1446	0.02	0.03	0.02	176,176,199	0.0	0.0	0.0	0,0,0
1447	0.01	0.02	0.02	172,162,197	0.0	0.0	0.0	0,0,0
1448	0.02	0.03	0.02	176,176,199	0.0	0.0	0.0	0,0,0
1449	0.01	0.02	0.02	172,162,197	0.0	0.0	0.0	0,0,0
1450	0.02	0.03	0.02	176,176,199	0.0	0.0	0.0	0,0,0
1451	0.01	0.03	0.02	172,162,197	0.0	0.0	0.0	0,0,0
1452	0.01	0.03	0.02	161,161,199	0.0	0.0	0.0	0,0,0
1453	0.01	0.03	0.02	172,162,197	0.0	0.0	0.0	0,0,0
1454	0.01	0.03	0.02	172,162,197	0.0	0.0	0.0	0,0,0
1455	0.01	0.02	0.02	172,162,197	0.0	0.0	0.0	0,0,0
1456	0.01	0.02	0.02	172,162,197	0.0	0.0	0.0	0,0,0
1457	0.01	0.02	0.02	172,162,197	0.0	0.0	0.0	0,0,0
1458	0.01	0.02	0.02	172,176,197	0.0	0.0	0.0	0,0,0
1459	0.01	0.02	0.02	172,162,197	0.0	0.0	0.0	0,0,0
1460	0.01	0.02	0.02	172,176,197	0.0	0.0	0.0	0,0,0
1461	0.01	0.02	0.02	172,176,197	0.0	0.0	0.0	0,0,0
1462	0.01	0.03	0.02	172,162,197	0.0	0.0	0.0	0,0,0
1463	0.01	0.03	0.02	172,162,197	0.0	0.0	0.0	0,0,0
1464	0.01	0.03	0.02	172,162,197	0.0	0.0	0.0	0,0,0
1465	0.02	0.03	0.02	176,176,199	0.0	0.0	0.0	0,0,0
1466	0.01	0.02	0.02	172,162,197	0.0	0.0	0.0	0,0,0
1467	0.02	0.03	0.02	176,176,199	0.0	0.0	0.0	0,0,0
1468	0.01	0.02	0.02	172,162,197	0.0	0.0	0.0	0,0,0
1469	0.02	0.03	0.02	176,176,199	0.0	0.0	0.0	0,0,0
1470	0.01	0.02	0.02	172,162,197	0.0	0.0	0.0	0,0,0
1471	0.02	0.03	0.02	176,176,199	0.0	0.0	0.0	0,0,0
1472	0.01	0.02	0.02	172,162,197	0.0	0.0	0.0	0,0,0
1473	0.02	0.03	0.02	176,176,199	0.0	0.0	0.0	0,0,0
1474	0.01	0.02	0.02	172,162,197	0.0	0.0	0.0	0,0,0
1475	0.02	0.03	0.02	161,161,199	0.0	0.0	0.0	0,0,0
1476	0.01	0.02	0.02	176,162,199	0.0	0.0	0.0	0,0,0
1477	0.02	0.03	0.03	176,176,199	0.0	0.0	0.0	0,0,0
1478	0.01	0.02	0.02	172,161,197	0.0	0.0	0.0	0,0,0
1479	0.02	0.03	0.03	176,176,199	0.0	0.0	0.0	0,0,0
1480	0.01	0.02	0.02	172,161,197	0.0	0.0	0.0	0,0,0
1481	0.02	0.03	0.03	176,176,199	0.0	0.0	0.0	0,0,0
1482	0.01	0.02	0.02	161,162,199	0.0	0.0	0.0	0,0,0
1483	0.02	0.03	0.03	176,176,199	0.0	0.0	0.0	0,0,0
1484	0.01	0.02	0.02	161,162,199	0.0	0.0	0.0	0,0,0
1485	0.03	0.04	0.04	176,176,199	0.0	0.0	0.0	0,0,0
1486	0.03	0.04	0.04	176,172,199	0.0	0.0	0.0	0,0,0
1487	0.01	0.02	0.02	157,162,197	0.0	0.0	0.0	0,0,0
1488	0.02	0.03	0.03	176,176,199	0.0	0.0	0.0	0,0,0
1489	0.01	0.02	0.02	172,162,197	0.0	0.0	0.0	0,0,0
1490	0.02	0.03	0.03	176,176,199	0.0	0.0	0.0	0,0,0
1491	0.01	0.02	0.02	172,161,197	0.0	0.0	0.0	0,0,0
1492	0.02	0.03	0.03	176,176,199	0.0	0.0	0.0	0,0,0
1493	0.01	0.02	0.02	172,161,197	0.0	0.0	0.0	0,0,0
1494	0.02	0.03	0.03	176,176,199	0.0	0.0	0.0	0,0,0
1495	0.01	0.02	0.02	172,162,197	0.0	0.0	0.0	0,0,0
1496	0.02	0.03	0.03	161,161,199	0.0	0.0	0.0	0,0,0
1497	0.01	0.02	0.02	172,162,197	0.0	0.0	0.0	0,0,0

1498	0.02	0.03	0.02	176,176,199	0.0	0.0	0.0	0,0,0
1499	0.01	0.02	0.02	172,162,197	0.0	0.0	0.0	0,0,0
1500	0.02	0.03	0.02	176,176,199	0.0	0.0	0.0	0,0,0
1501	0.01	0.02	0.02	172,162,197	0.0	0.0	0.0	0,0,0
1502	0.02	0.03	0.02	176,176,199	0.0	0.0	0.0	0,0,0
1503	0.01	0.02	0.02	172,162,197	0.0	0.0	0.0	0,0,0
1504	0.02	0.03	0.02	176,176,199	0.0	0.0	0.0	0,0,0
1505	0.01	0.02	0.02	172,162,197	0.0	0.0	0.0	0,0,0
1506	0.02	0.03	0.02	176,176,199	0.0	0.0	0.0	0,0,0
1507	0.01	0.03	0.02	172,176,197	0.0	0.0	0.0	0,0,0
1508	0.01	0.03	0.02	161,161,199	0.0	0.0	0.0	0,0,0
1509	0.01	0.03	0.02	172,176,197	0.0	0.0	0.0	0,0,0
1510	0.01	0.03	0.02	172,176,197	0.0	0.0	0.0	0,0,0
1511	0.01	0.02	0.02	172,162,197	0.0	0.0	0.0	0,0,0
1512	0.01	0.02	0.02	172,176,197	0.0	0.0	0.0	0,0,0
1513	0.01	0.02	0.02	172,162,197	0.0	0.0	0.0	0,0,0
1514	0.01	0.02	0.02	172,162,197	0.0	0.0	0.0	0,0,0
1515	0.01	0.02	0.02	172,176,197	0.0	0.0	0.0	0,0,0
1516	0.01	0.02	0.02	172,162,197	0.0	0.0	0.0	0,0,0
1517	0.01	0.02	0.02	172,162,197	0.0	0.0	0.0	0,0,0
1518	0.01	0.03	0.02	172,176,197	0.0	0.0	0.0	0,0,0
1519	0.01	0.03	0.02	172,176,197	0.0	0.0	0.0	0,0,0
1520	0.01	0.03	0.02	172,176,197	0.0	0.0	0.0	0,0,0
1521	0.02	0.03	0.02	176,176,199	0.0	0.0	0.0	0,0,0
1522	0.01	0.02	0.02	172,162,197	0.0	0.0	0.0	0,0,0
1523	0.02	0.03	0.02	176,176,199	0.0	0.0	0.0	0,0,0
1524	0.01	0.02	0.02	172,162,197	0.0	0.0	0.0	0,0,0
1525	0.02	0.03	0.02	176,176,199	0.0	0.0	0.0	0,0,0
1526	0.01	0.02	0.02	172,162,197	0.0	0.0	0.0	0,0,0
1527	0.02	0.03	0.02	176,176,199	0.0	0.0	0.0	0,0,0
1528	0.01	0.02	0.02	172,162,197	0.0	0.0	0.0	0,0,0
1529	0.02	0.03	0.02	176,176,199	0.0	0.0	0.0	0,0,0
1530	0.01	0.02	0.02	172,162,197	0.0	0.0	0.0	0,0,0
1531	0.02	0.03	0.02	161,161,199	0.0	0.0	0.0	0,0,0
1532	0.01	0.02	0.02	172,162,197	0.0	0.0	0.0	0,0,0
1533	0.02	0.03	0.03	176,176,199	0.0	0.0	0.0	0,0,0
1534	0.01	0.02	0.02	172,162,197	0.0	0.0	0.0	0,0,0
1535	0.02	0.03	0.03	176,176,199	0.0	0.0	0.0	0,0,0
1536	0.01	0.02	0.02	172,161,197	0.0	0.0	0.0	0,0,0
1537	0.02	0.03	0.03	176,176,199	0.0	0.0	0.0	0,0,0
1538	0.01	0.02	0.02	172,161,197	0.0	0.0	0.0	0,0,0
1539	0.02	0.03	0.03	176,176,199	0.0	0.0	0.0	0,0,0
1540	0.01	0.02	0.02	157,162,197	0.0	0.0	0.0	0,0,0
1541	0.03	0.04	0.04	176,172,199	0.0	0.0	0.0	0,0,0
1542	0.02	0.03	0.03	176,176,199	0.0	0.0	0.0	0,0,0
1543	0.01	0.02	0.02	172,172,197	0.0	0.0	0.0	0,0,0
1544	0.01	0.02	0.02	176,176,199	0.0	0.0	0.0	0,0,0
1545	0.01	0.02	0.02	172,162,197	0.0	0.0	0.0	0,0,0
1546	0.01	0.02	0.02	176,176,199	0.0	0.0	0.0	0,0,0
1547	0.01	0.02	0.02	172,162,197	0.0	0.0	0.0	0,0,0
1548	0.01	0.03	0.02	176,176,199	0.0	0.0	0.0	0,0,0
1549	0.01	0.02	0.02	172,176,197	0.0	0.0	0.0	0,0,0
1550	0.01	0.03	0.02	176,176,199	0.0	0.0	0.0	0,0,0
1551	0.01	0.02	0.02	172,161,197	0.0	0.0	0.0	0,0,0
1552	0.01	0.02	0.02	161,161,199	0.0	0.0	0.0	0,0,0
1553	0.01	0.02	0.02	172,162,197	0.0	0.0	0.0	0,0,0
1554	0.01	0.02	0.02	176,162,199	0.0	0.0	0.0	0,0,0
1555	0.01	0.02	0.02	172,161,197	0.0	0.0	0.0	0,0,0
1556	0.01	0.02	0.02	176,162,199	0.0	0.0	0.0	0,0,0
1557	0.01	0.02	0.02	172,162,197	0.0	0.0	0.0	0,0,0
1558	0.01	0.02	0.02	176,161,199	0.0	0.0	0.0	0,0,0
1559	0.01	0.02	0.02	172,176,197	0.0	0.0	0.0	0,0,0
1560	0.01	0.02	0.02	176,161,199	0.0	0.0	0.0	0,0,0
1561	0.01	0.02	0.02	172,176,197	0.0	0.0	0.0	0,0,0
1562	0.01	0.02	0.02	176,162,199	0.0	0.0	0.0	0,0,0
1563	0.01	0.02	0.02	172,161,197	0.0	0.0	0.0	0,0,0
1564	0.01	0.02	0.02	161,161,199	0.0	0.0	0.0	0,0,0
1565	0.01	0.02	0.02	172,162,199	0.0	0.0	0.0	0,0,0
1566	0.01	0.02	0.02	161,176,199	0.0	0.0	0.0	0,0,0
1567	0.01	0.02	0.02	161,162,199	0.0	0.0	0.0	0,0,0
1568	0.01	0.02	0.02	161,162,199	0.0	0.0	0.0	0,0,0
1569	0.01	0.02	0.02	162,162,199	0.0	0.0	0.0	0,0,0
1570	0.01	0.02	0.02	161,162,199	0.0	0.0	0.0	0,0,0
1571	0.01	0.02	0.02	161,176,199	0.0	0.0	0.0	0,0,0
1572	0.01	0.02	0.02	161,161,199	0.0	0.0	0.0	0,0,0
1573	0.01	0.02	0.02	161,176,199	0.0	0.0	0.0	0,0,0
1574	0.01	0.02	0.02	176,162,199	0.0	0.0	0.0	0,0,0
1575	0.01	0.02	0.02	161,161,199	0.0	0.0	0.0	0,0,0
1576	0.01	0.02	0.02	172,161,197	0.0	0.0	0.0	0,0,0

1577	0.01	0.02	0.02	176,162,199	0.0	0.0	0.0	0,0,0
1578	0.01	0.02	0.02	161,176,199	0.0	0.0	0.0	0,0,0
1579	0.01	0.02	0.02	162,162,199	0.0	0.0	0.0	0,0,0
1580	0.01	0.02	0.02	161,176,199	0.0	0.0	0.0	0,0,0
1581	0.01	0.02	0.02	176,161,199	0.0	0.0	0.0	0,0,0
1582	0.01	0.02	0.02	161,162,199	0.0	0.0	0.0	0,0,0
1583	0.01	0.02	0.02	176,162,199	0.0	0.0	0.0	0,0,0
1584	0.01	0.02	0.02	172,161,199	0.0	0.0	0.0	0,0,0
1585	0.01	0.02	0.02	176,162,199	0.0	0.0	0.0	0,0,0
1586	0.01	0.02	0.02	172,162,197	0.0	0.0	0.0	0,0,0
1587	0.01	0.02	0.02	161,161,199	0.0	0.0	0.0	0,0,0
1588	0.01	0.02	0.02	172,161,197	0.0	0.0	0.0	0,0,0
1589	0.01	0.02	0.02	176,176,199	0.0	0.0	0.0	0,0,0
1590	0.01	0.02	0.02	172,176,197	0.0	0.0	0.0	0,0,0
1591	0.01	0.02	0.02	176,176,199	0.0	0.0	0.0	0,0,0
1592	0.01	0.02	0.02	172,162,197	0.0	0.0	0.0	0,0,0
1593	0.01	0.02	0.02	176,176,199	0.0	0.0	0.0	0,0,0
1594	0.01	0.02	0.02	172,162,197	0.0	0.0	0.0	0,0,0
1595	0.01	0.02	0.02	176,176,199	0.0	0.0	0.0	0,0,0
1596	0.01	0.02	0.02	172,172,197	0.0	0.0	0.0	0,0,0
1597	0.02	0.03	0.03	176,176,199	0.0	0.0	0.0	0,0,0
2219	0.04	0.06	0.05	172,172,197	0.0	0.0	0.0	0,0,0
2220	0.01	0.02	0.02	157,176,197	0.0	0.0	0.0	0,0,0
2221	0.03	0.05	0.04	176,172,199	0.0	0.0	0.0	0,0,0
2222	0.01	0.02	0.02	157,172,197	0.0	0.0	0.0	0,0,0
2223	0.03	0.05	0.04	176,176,199	0.0	0.0	0.0	0,0,0
2224	0.01	0.02	0.02	157,172,197	0.0	0.0	0.0	0,0,0
2225	0.03	0.05	0.04	176,176,199	0.0	0.0	0.0	0,0,0
2226	0.01	0.02	0.02	157,172,197	0.0	0.0	0.0	0,0,0
2227	0.03	0.06	0.04	176,176,199	0.0	0.0	0.0	0,0,0
2228	0.01	0.03	0.02	161,176,199	0.0	0.0	0.0	0,0,0
2229	0.03	0.05	0.04	157,176,197	0.0	0.0	0.0	0,0,0
2230	0.01	0.03	0.02	161,176,199	0.0	0.0	0.0	0,0,0
2231	0.03	0.05	0.03	176,176,199	0.0	0.0	0.0	0,0,0
2232	0.01	0.02	0.02	157,176,197	0.0	0.0	0.0	0,0,0
2233	0.02	0.05	0.03	176,176,199	0.0	0.0	0.0	0,0,0
2234	0.01	0.03	0.02	161,176,199	0.0	0.0	0.0	0,0,0
2235	0.02	0.05	0.03	176,176,199	0.0	0.0	0.0	0,0,0
2236	0.01	0.03	0.02	161,176,199	0.0	0.0	0.0	0,0,0
2237	0.02	0.05	0.03	172,176,197	0.0	0.0	0.0	0,0,0
2238	0.01	0.03	0.02	161,176,199	0.0	0.0	0.0	0,0,0
2239	0.02	0.05	0.03	176,176,199	0.0	0.0	0.0	0,0,0
2240	0.01	0.03	0.02	176,176,199	0.0	0.0	0.0	0,0,0
2241	0.02	0.04	0.03	157,176,197	0.0	0.0	0.0	0,0,0
2242	0.01	0.04	0.02	176,176,199	0.0	0.0	0.0	0,0,0
2243	0.02	0.04	0.02	176,176,199	0.0	0.0	0.0	0,0,0
2244	0.01	0.03	0.02	161,176,199	0.0	0.0	0.0	0,0,0
2245	0.02	0.04	0.02	161,176,199	0.0	0.0	0.0	0,0,0
2246	0.01	0.04	0.02	161,176,199	0.0	0.0	0.0	0,0,0
2247	0.02	0.04	0.02	161,176,199	0.0	0.0	0.0	0,0,0
2248	0.01	0.04	0.02	161,176,199	0.0	0.0	0.0	0,0,0
2249	0.01	0.04	0.02	161,176,199	0.0	0.0	0.0	0,0,0
2250	0.02	0.04	0.02	176,176,199	0.0	0.0	0.0	0,0,0
2251	0.02	0.04	0.02	176,176,199	0.0	0.0	0.0	0,0,0
2252	0.02	0.04	0.02	157,176,197	0.0	0.0	0.0	0,0,0
2253	0.02	0.03	0.02	176,176,199	0.0	0.0	0.0	0,0,0
2254	0.02	0.05	0.03	176,176,199	0.0	0.0	0.0	0,0,0
2255	0.01	0.03	0.02	161,176,199	0.0	0.0	0.0	0,0,0
2256	0.02	0.04	0.03	172,176,197	0.0	0.0	0.0	0,0,0
2257	0.01	0.03	0.02	161,176,199	0.0	0.0	0.0	0,0,0
2258	0.02	0.04	0.03	176,176,199	0.0	0.0	0.0	0,0,0
2259	0.01	0.03	0.02	161,176,199	0.0	0.0	0.0	0,0,0
2260	0.02	0.04	0.03	176,176,199	0.0	0.0	0.0	0,0,0
2261	0.01	0.03	0.02	157,172,197	0.0	0.0	0.0	0,0,0
2262	0.02	0.05	0.03	176,176,199	0.0	0.0	0.0	0,0,0
2263	0.01	0.03	0.02	161,176,199	0.0	0.0	0.0	0,0,0
2264	0.02	0.05	0.03	157,176,197	0.0	0.0	0.0	0,0,0
2265	0.01	0.03	0.02	161,176,199	0.0	0.0	0.0	0,0,0
2266	0.03	0.05	0.04	176,176,199	0.0	0.0	0.0	0,0,0
2267	0.01	0.02	0.02	157,172,197	0.0	0.0	0.0	0,0,0
2268	0.03	0.05	0.04	176,176,199	0.0	0.0	0.0	0,0,0
2269	0.01	0.02	0.02	157,172,197	0.0	0.0	0.0	0,0,0
2270	0.03	0.05	0.04	176,176,199	0.0	0.0	0.0	0,0,0
2271	0.01	0.02	0.02	157,172,197	0.0	0.0	0.0	0,0,0
2272	0.03	0.05	0.04	176,172,199	0.0	0.0	0.0	0,0,0
2273	0.01	0.02	0.02	157,176,197	0.0	0.0	0.0	0,0,0
2274	0.04	0.06	0.05	172,172,197	0.0	0.0	0.0	0,0,0
2275	0.03	0.05	0.04	172,176,197	0.0	0.0	0.0	0,0,0
2276	0.01	0.02	0.02	161,176,199	0.0	0.0	0.0	0,0,0

2277	0.03	0.04	0.04	172,172,197	0.0	0.0	0.0	0,0,0
2278	0.01	0.02	0.02	176,176,199	0.0	0.0	0.0	0,0,0
2279	0.03	0.04	0.03	172,172,197	0.0	0.0	0.0	0,0,0
2280	0.01	0.02	0.02	176,161,199	0.0	0.0	0.0	0,0,0
2281	0.03	0.04	0.03	172,172,197	0.0	0.0	0.0	0,0,0
2282	0.01	0.02	0.02	161,161,199	0.0	0.0	0.0	0,0,0
2283	0.03	0.04	0.03	176,176,199	0.0	0.0	0.0	0,0,0
2284	0.01	0.02	0.02	176,176,199	0.0	0.0	0.0	0,0,0
2285	0.02	0.03	0.03	157,157,197	0.0	0.0	0.0	0,0,0
2286	0.01	0.02	0.02	176,172,199	0.0	0.0	0.0	0,0,0
2287	0.02	0.03	0.03	176,176,199	0.0	0.0	0.0	0,0,0
2288	0.01	0.02	0.02	161,172,199	0.0	0.0	0.0	0,0,0
2289	0.02	0.03	0.03	172,172,197	0.0	0.0	0.0	0,0,0
2290	0.01	0.02	0.02	176,172,199	0.0	0.0	0.0	0,0,0
2291	0.02	0.03	0.03	172,172,197	0.0	0.0	0.0	0,0,0
2292	0.01	0.02	0.02	176,172,199	0.0	0.0	0.0	0,0,0
2293	0.02	0.03	0.02	172,172,197	0.0	0.0	0.0	0,0,0
2294	0.01	0.02	0.02	161,172,199	0.0	0.0	0.0	0,0,0
2295	0.02	0.03	0.02	176,176,199	0.0	0.0	0.0	0,0,0
2296	0.01	0.02	0.02	176,176,199	0.0	0.0	0.0	0,0,0
2297	0.01	0.03	0.02	157,176,197	0.0	0.0	0.0	0,0,0
2298	0.01	0.03	0.02	176,176,199	0.0	0.0	0.0	0,0,0
2299	0.01	0.03	0.02	172,176,197	0.0	0.0	0.0	0,0,0
2300	0.01	0.02	0.02	161,172,199	0.0	0.0	0.0	0,0,0
2301	0.01	0.02	0.02	172,172,197	0.0	0.0	0.0	0,0,0
2302	0.01	0.02	0.02	176,172,199	0.0	0.0	0.0	0,0,0
2303	0.01	0.02	0.02	161,172,199	0.0	0.0	0.0	0,0,0
2304	0.01	0.02	0.02	176,172,199	0.0	0.0	0.0	0,0,0
2305	0.01	0.02	0.02	161,172,199	0.0	0.0	0.0	0,0,0
2306	0.01	0.03	0.02	172,176,197	0.0	0.0	0.0	0,0,0
2307	0.01	0.03	0.02	176,176,199	0.0	0.0	0.0	0,0,0
2308	0.01	0.02	0.02	176,176,199	0.0	0.0	0.0	0,0,0
2309	0.01	0.02	0.02	176,176,199	0.0	0.0	0.0	0,0,0
2310	0.02	0.03	0.02	176,176,199	0.0	0.0	0.0	0,0,0
2311	0.01	0.02	0.02	161,172,199	0.0	0.0	0.0	0,0,0
2312	0.02	0.03	0.02	172,172,197	0.0	0.0	0.0	0,0,0
2313	0.01	0.02	0.02	176,172,199	0.0	0.0	0.0	0,0,0
2314	0.02	0.03	0.02	172,172,197	0.0	0.0	0.0	0,0,0
2315	0.01	0.02	0.02	176,172,199	0.0	0.0	0.0	0,0,0
2316	0.02	0.03	0.02	172,172,197	0.0	0.0	0.0	0,0,0
2317	0.01	0.02	0.02	161,172,199	0.0	0.0	0.0	0,0,0
2318	0.02	0.03	0.03	176,176,199	0.0	0.0	0.0	0,0,0
2319	0.01	0.02	0.02	176,172,199	0.0	0.0	0.0	0,0,0
2320	0.02	0.03	0.03	157,157,197	0.0	0.0	0.0	0,0,0
2321	0.01	0.02	0.02	176,176,199	0.0	0.0	0.0	0,0,0
2322	0.02	0.03	0.03	176,176,199	0.0	0.0	0.0	0,0,0
2323	0.01	0.02	0.02	161,161,199	0.0	0.0	0.0	0,0,0
2324	0.02	0.03	0.03	172,172,197	0.0	0.0	0.0	0,0,0
2325	0.01	0.02	0.02	176,162,199	0.0	0.0	0.0	0,0,0
2326	0.02	0.03	0.03	172,172,197	0.0	0.0	0.0	0,0,0
2327	0.01	0.02	0.02	161,176,199	0.0	0.0	0.0	0,0,0
2328	0.02	0.03	0.03	172,172,197	0.0	0.0	0.0	0,0,0
2329	0.01	0.02	0.02	161,176,199	0.0	0.0	0.0	0,0,0
2330	0.03	0.05	0.04	172,176,197	0.0	0.0	0.0	0,0,0
2331	0.03	0.04	0.04	172,176,197	0.0	0.0	0.0	0,0,0
2332	0.01	0.02	0.02	161,176,199	0.0	0.0	0.0	0,0,0
2333	0.02	0.04	0.03	176,176,199	0.0	0.0	0.0	0,0,0
2334	0.01	0.02	0.02	176,176,199	0.0	0.0	0.0	0,0,0
2335	0.02	0.04	0.03	176,176,199	0.0	0.0	0.0	0,0,0
2336	0.01	0.02	0.02	176,161,199	0.0	0.0	0.0	0,0,0
2337	0.02	0.03	0.03	176,172,199	0.0	0.0	0.0	0,0,0
2338	0.01	0.02	0.02	167,161,199	0.0	0.0	0.0	0,0,0
2339	0.02	0.04	0.03	176,176,199	0.0	0.0	0.0	0,0,0
2340	0.01	0.02	0.02	176,176,199	0.0	0.0	0.0	0,0,0
2341	0.02	0.03	0.03	157,157,197	0.0	0.0	0.0	0,0,0
2342	0.01	0.02	0.02	176,176,199	0.0	0.0	0.0	0,0,0
2343	0.02	0.03	0.03	176,176,199	0.0	0.0	0.0	0,0,0
2344	0.01	0.02	0.02	161,161,199	0.0	0.0	0.0	0,0,0
2345	0.02	0.03	0.02	176,176,199	0.0	0.0	0.0	0,0,0
2346	0.01	0.02	0.02	176,162,199	0.0	0.0	0.0	0,0,0
2347	0.02	0.03	0.02	176,176,199	0.0	0.0	0.0	0,0,0
2348	0.01	0.02	0.02	176,162,199	0.0	0.0	0.0	0,0,0
2349	0.02	0.03	0.02	176,176,199	0.0	0.0	0.0	0,0,0
2350	0.01	0.02	0.02	161,162,199	0.0	0.0	0.0	0,0,0
2351	0.02	0.03	0.02	176,176,199	0.0	0.0	0.0	0,0,0
2352	0.01	0.02	0.02	176,176,199	0.0	0.0	0.0	0,0,0
2353	0.01	0.02	0.02	157,157,197	0.0	0.0	0.0	0,0,0
2354	0.01	0.02	0.02	176,176,199	0.0	0.0	0.0	0,0,0
2355	0.01	0.02	0.02	176,176,199	0.0	0.0	0.0	0,0,0

2356	0.01	0.02	0.02	161,162,199	0.0	0.0	0.0	0,0,0
2357	0.01	0.02	0.02	176,176,199	0.0	0.0	0.0	0,0,0
2358	0.01	0.02	0.02	176,176,199	0.0	0.0	0.0	0,0,0
2359	0.01	0.02	0.02	176,162,199	0.0	0.0	0.0	0,0,0
2360	0.01	0.02	0.02	176,176,199	0.0	0.0	0.0	0,0,0
2361	0.01	0.02	0.02	176,176,199	0.0	0.0	0.0	0,0,0
2362	0.01	0.02	0.02	176,176,199	0.0	0.0	0.0	0,0,0
2363	0.01	0.02	0.02	176,176,199	0.0	0.0	0.0	0,0,0
2364	0.01	0.02	0.02	176,176,199	0.0	0.0	0.0	0,0,0
2365	0.01	0.02	0.02	176,176,199	0.0	0.0	0.0	0,0,0
2366	0.02	0.03	0.02	176,176,199	0.0	0.0	0.0	0,0,0
2367	0.01	0.02	0.02	161,176,199	0.0	0.0	0.0	0,0,0
2368	0.02	0.03	0.02	176,176,199	0.0	0.0	0.0	0,0,0
2369	0.01	0.02	0.02	176,162,199	0.0	0.0	0.0	0,0,0
2370	0.02	0.03	0.02	176,176,199	0.0	0.0	0.0	0,0,0
2371	0.01	0.02	0.02	176,162,199	0.0	0.0	0.0	0,0,0
2372	0.02	0.03	0.02	176,176,199	0.0	0.0	0.0	0,0,0
2373	0.01	0.02	0.02	161,161,199	0.0	0.0	0.0	0,0,0
2374	0.02	0.03	0.02	176,176,199	0.0	0.0	0.0	0,0,0
2375	0.01	0.02	0.02	176,176,199	0.0	0.0	0.0	0,0,0
2376	0.02	0.03	0.02	157,157,197	0.0	0.0	0.0	0,0,0
2377	0.01	0.02	0.02	176,176,199	0.0	0.0	0.0	0,0,0
2378	0.02	0.03	0.03	176,176,199	0.0	0.0	0.0	0,0,0
2379	0.01	0.02	0.02	161,161,199	0.0	0.0	0.0	0,0,0
2380	0.02	0.03	0.03	176,172,199	0.0	0.0	0.0	0,0,0
2381	0.01	0.02	0.02	176,162,199	0.0	0.0	0.0	0,0,0
2382	0.02	0.03	0.03	176,172,199	0.0	0.0	0.0	0,0,0
2383	0.01	0.02	0.02	176,176,199	0.0	0.0	0.0	0,0,0
2384	0.02	0.03	0.03	176,176,199	0.0	0.0	0.0	0,0,0
2385	0.01	0.02	0.02	161,176,199	0.0	0.0	0.0	0,0,0
2386	0.03	0.04	0.04	172,176,197	0.0	0.0	0.0	0,0,0
2387	0.03	0.04	0.03	176,176,199	0.0	0.0	0.0	0,0,0
2388	0.01	0.02	0.02	157,176,197	0.0	0.0	0.0	0,0,0
2389	0.02	0.03	0.03	176,176,199	0.0	0.0	0.0	0,0,0
2390	0.01	0.02	0.02	172,176,197	0.0	0.0	0.0	0,0,0
2391	0.02	0.03	0.03	176,176,199	0.0	0.0	0.0	0,0,0
2392	0.01	0.02	0.02	172,162,197	0.0	0.0	0.0	0,0,0
2393	0.02	0.03	0.03	176,176,199	0.0	0.0	0.0	0,0,0
2394	0.01	0.02	0.02	157,161,197	0.0	0.0	0.0	0,0,0
2395	0.02	0.03	0.03	176,176,199	0.0	0.0	0.0	0,0,0
2396	0.01	0.02	0.02	176,176,199	0.0	0.0	0.0	0,0,0
2397	0.02	0.03	0.02	157,157,197	0.0	0.0	0.0	0,0,0
2398	0.01	0.02	0.02	176,162,199	0.0	0.0	0.0	0,0,0
2399	0.02	0.03	0.02	176,176,199	0.0	0.0	0.0	0,0,0
2400	0.01	0.02	0.02	157,161,197	0.0	0.0	0.0	0,0,0
2401	0.02	0.03	0.02	176,176,199	0.0	0.0	0.0	0,0,0
2402	0.01	0.02	0.02	172,161,197	0.0	0.0	0.0	0,0,0
2403	0.02	0.03	0.02	176,176,199	0.0	0.0	0.0	0,0,0
2404	0.01	0.02	0.02	176,161,199	0.0	0.0	0.0	0,0,0
2405	0.02	0.02	0.02	176,176,199	0.0	0.0	0.0	0,0,0
2406	0.01	0.02	0.02	157,161,197	0.0	0.0	0.0	0,0,0
2407	0.02	0.02	0.02	176,176,199	0.0	0.0	0.0	0,0,0
2408	0.01	0.02	0.02	176,161,199	0.0	0.0	0.0	0,0,0
2409	0.01	0.02	0.02	157,157,197	0.0	0.0	0.0	0,0,0
2410	0.01	0.02	0.02	176,161,199	0.0	0.0	0.0	0,0,0
2411	0.01	0.02	0.02	176,162,199	0.0	0.0	0.0	0,0,0
2412	0.01	0.02	0.02	157,176,197	0.0	0.0	0.0	0,0,0
2413	0.01	0.02	0.02	172,162,197	0.0	0.0	0.0	0,0,0
2414	0.01	0.02	0.02	176,176,199	0.0	0.0	0.0	0,0,0
2415	0.01	0.02	0.02	176,176,199	0.0	0.0	0.0	0,0,0
2416	0.01	0.02	0.02	176,161,199	0.0	0.0	0.0	0,0,0
2417	0.01	0.02	0.02	157,161,197	0.0	0.0	0.0	0,0,0
2418	0.01	0.02	0.02	157,161,197	0.0	0.0	0.0	0,0,0
2419	0.01	0.02	0.02	176,162,199	0.0	0.0	0.0	0,0,0
2420	0.01	0.02	0.02	176,161,199	0.0	0.0	0.0	0,0,0
2421	0.01	0.02	0.02	176,161,199	0.0	0.0	0.0	0,0,0
2422	0.02	0.02	0.02	176,176,199	0.0	0.0	0.0	0,0,0
2423	0.01	0.02	0.02	157,162,197	0.0	0.0	0.0	0,0,0
2424	0.02	0.02	0.02	176,176,199	0.0	0.0	0.0	0,0,0
2425	0.01	0.02	0.02	176,161,199	0.0	0.0	0.0	0,0,0
2426	0.02	0.02	0.02	176,176,199	0.0	0.0	0.0	0,0,0
2427	0.01	0.02	0.02	176,161,199	0.0	0.0	0.0	0,0,0
2428	0.02	0.02	0.02	176,176,199	0.0	0.0	0.0	0,0,0
2429	0.01	0.02	0.02	157,161,197	0.0	0.0	0.0	0,0,0
2430	0.02	0.03	0.02	176,176,199	0.0	0.0	0.0	0,0,0
2431	0.01	0.02	0.02	176,161,199	0.0	0.0	0.0	0,0,0
2432	0.02	0.03	0.02	157,157,197	0.0	0.0	0.0	0,0,0
2433	0.01	0.02	0.02	176,162,199	0.0	0.0	0.0	0,0,0
2434	0.02	0.03	0.03	176,176,199	0.0	0.0	0.0	0,0,0

2435	0.01	0.02	0.02	157,161,197	0.0	0.0	0.0	0,0,0
2436	0.02	0.03	0.03	176,176,199	0.0	0.0	0.0	0,0,0
2437	0.01	0.02	0.02	172,161,197	0.0	0.0	0.0	0,0,0
2438	0.02	0.03	0.03	176,176,199	0.0	0.0	0.0	0,0,0
2439	0.01	0.02	0.02	172,176,197	0.0	0.0	0.0	0,0,0
2440	0.02	0.03	0.03	176,176,199	0.0	0.0	0.0	0,0,0
2441	0.01	0.02	0.02	161,176,199	0.0	0.0	0.0	0,0,0
2442	0.02	0.04	0.03	176,176,199	0.0	0.0	0.0	0,0,0
2443	0.02	0.03	0.03	176,176,199	0.0	0.0	0.0	0,0,0
2444	0.01	0.02	0.02	176,176,199	0.0	0.0	0.0	0,0,0
2445	0.02	0.03	0.02	176,176,199	0.0	0.0	0.0	0,0,0
2446	0.01	0.02	0.02	162,176,199	0.0	0.0	0.0	0,0,0
2447	0.02	0.03	0.02	176,176,199	0.0	0.0	0.0	0,0,0
2448	0.01	0.02	0.02	162,176,199	0.0	0.0	0.0	0,0,0
2449	0.02	0.02	0.02	176,176,199	0.0	0.0	0.0	0,0,0
2450	0.01	0.02	0.02	162,176,199	0.0	0.0	0.0	0,0,0
2451	0.02	0.02	0.02	176,176,199	0.0	0.0	0.0	0,0,0
2452	0.01	0.02	0.02	161,161,199	0.0	0.0	0.0	0,0,0
2453	0.01	0.02	0.02	161,161,199	0.0	0.0	0.0	0,0,0
2454	0.01	0.02	0.02	176,176,199	0.0	0.0	0.0	0,0,0
2455	0.01	0.02	0.02	176,176,199	0.0	0.0	0.0	0,0,0
2456	0.01	0.02	0.02	161,161,199	0.0	0.0	0.0	0,0,0
2457	0.01	0.02	0.02	176,176,199	0.0	0.0	0.0	0,0,0
2458	0.01	0.02	0.02	161,161,199	0.0	0.0	0.0	0,0,0
2459	0.01	0.02	0.02	162,161,199	0.0	0.0	0.0	0,0,0
2460	0.01	0.02	0.02	162,176,199	0.0	0.0	0.0	0,0,0
2461	0.01	0.02	0.02	161,161,199	0.0	0.0	0.0	0,0,0
2462	0.01	0.02	0.02	161,176,199	0.0	0.0	0.0	0,0,0
2463	0.01	0.02	0.02	176,176,199	0.0	0.0	0.0	0,0,0
2464	0.01	0.02	0.02	161,161,199	0.0	0.0	0.0	0,0,0
2465	0.01	0.02	0.02	161,161,199	0.0	0.0	0.0	0,0,0
2466	0.01	0.02	0.02	176,176,199	0.0	0.0	0.0	0,0,0
2467	0.01	0.02	0.02	162,176,199	0.0	0.0	0.0	0,0,0
2468	0.01	0.02	0.02	161,161,199	0.0	0.0	0.0	0,0,0
2469	0.01	0.02	0.02	162,176,199	0.0	0.0	0.0	0,0,0
2470	0.01	0.02	0.02	162,161,199	0.0	0.0	0.0	0,0,0
2471	0.01	0.02	0.02	161,161,199	0.0	0.0	0.0	0,0,0
2472	0.01	0.02	0.02	161,176,199	0.0	0.0	0.0	0,0,0
2473	0.01	0.02	0.02	161,161,199	0.0	0.0	0.0	0,0,0
2474	0.01	0.02	0.02	161,176,199	0.0	0.0	0.0	0,0,0
2475	0.01	0.02	0.02	176,176,199	0.0	0.0	0.0	0,0,0
2476	0.01	0.02	0.02	161,161,199	0.0	0.0	0.0	0,0,0
2477	0.01	0.02	0.02	161,161,199	0.0	0.0	0.0	0,0,0
2478	0.01	0.02	0.02	176,176,199	0.0	0.0	0.0	0,0,0
2479	0.01	0.02	0.02	161,176,199	0.0	0.0	0.0	0,0,0
2480	0.01	0.02	0.02	161,176,199	0.0	0.0	0.0	0,0,0
2481	0.01	0.02	0.02	162,176,199	0.0	0.0	0.0	0,0,0
2482	0.01	0.02	0.02	176,176,199	0.0	0.0	0.0	0,0,0
2483	0.01	0.02	0.02	161,161,199	0.0	0.0	0.0	0,0,0
2484	0.01	0.02	0.02	176,176,199	0.0	0.0	0.0	0,0,0
2485	0.01	0.02	0.02	161,161,199	0.0	0.0	0.0	0,0,0
2486	0.01	0.02	0.02	176,176,199	0.0	0.0	0.0	0,0,0
2487	0.01	0.02	0.02	176,176,199	0.0	0.0	0.0	0,0,0
2488	0.01	0.02	0.02	161,161,199	0.0	0.0	0.0	0,0,0
2489	0.01	0.02	0.02	161,161,199	0.0	0.0	0.0	0,0,0
2490	0.02	0.02	0.02	176,176,199	0.0	0.0	0.0	0,0,0
2491	0.01	0.02	0.02	162,176,199	0.0	0.0	0.0	0,0,0
2492	0.01	0.02	0.02	176,176,199	0.0	0.0	0.0	0,0,0
2493	0.01	0.02	0.02	176,176,199	0.0	0.0	0.0	0,0,0
2494	0.02	0.02	0.02	176,176,199	0.0	0.0	0.0	0,0,0
2495	0.01	0.02	0.02	162,176,199	0.0	0.0	0.0	0,0,0
2496	0.02	0.03	0.02	176,176,199	0.0	0.0	0.0	0,0,0
2497	0.01	0.02	0.02	162,176,199	0.0	0.0	0.0	0,0,0
2498	0.02	0.03	0.02	176,176,199	0.0	0.0	0.0	0,0,0
3116	0.04	0.06	0.06	172,172,197	0.0	0.0	0.0	0,0,0
3117	0.01	0.02	0.02	157,172,197	0.0	0.0	0.0	0,0,0
3118	0.03	0.05	0.05	176,176,199	0.0	0.0	0.0	0,0,0
3119	0.01	0.02	0.02	157,172,197	0.0	0.0	0.0	0,0,0
3120	0.03	0.05	0.04	176,176,199	0.0	0.0	0.0	0,0,0
3121	0.01	0.02	0.02	157,172,197	0.0	0.0	0.0	0,0,0
3122	0.03	0.05	0.04	172,172,197	0.0	0.0	0.0	0,0,0
3123	0.01	0.02	0.02	157,172,197	0.0	0.0	0.0	0,0,0
3124	0.03	0.06	0.04	176,176,199	0.0	0.0	0.0	0,0,0
3125	0.01	0.02	0.02	161,172,199	0.0	0.0	0.0	0,0,0
3126	0.03	0.04	0.04	157,157,197	0.0	0.0	0.0	0,0,0
3127	0.01	0.02	0.02	161,172,199	0.0	0.0	0.0	0,0,0
3128	0.03	0.05	0.04	176,176,199	0.0	0.0	0.0	0,0,0
3129	0.01	0.02	0.02	157,172,197	0.0	0.0	0.0	0,0,0
3130	0.03	0.05	0.03	176,176,199	0.0	0.0	0.0	0,0,0

3131	0.01	0.02	0.02	161,172,199	0.0	0.0	0.0	0,0,0
3132	0.02	0.04	0.03	172,176,197	0.0	0.0	0.0	0,0,0
3133	0.01	0.02	0.02	161,172,199	0.0	0.0	0.0	0,0,0
3134	0.02	0.04	0.03	157,176,197	0.0	0.0	0.0	0,0,0
3135	0.01	0.03	0.02	157,176,197	0.0	0.0	0.0	0,0,0
3136	0.02	0.05	0.03	176,176,199	0.0	0.0	0.0	0,0,0
3137	0.01	0.02	0.02	176,172,199	0.0	0.0	0.0	0,0,0
3138	0.02	0.03	0.02	157,157,197	0.0	0.0	0.0	0,0,0
3139	0.01	0.03	0.02	176,176,199	0.0	0.0	0.0	0,0,0
3140	0.02	0.04	0.03	176,176,199	0.0	0.0	0.0	0,0,0
3141	0.01	0.03	0.02	157,176,197	0.0	0.0	0.0	0,0,0
3142	0.02	0.04	0.02	176,176,199	0.0	0.0	0.0	0,0,0
3143	0.01	0.03	0.02	161,176,199	0.0	0.0	0.0	0,0,0
3144	0.01	0.03	0.02	161,176,199	0.0	0.0	0.0	0,0,0
3145	0.01	0.03	0.02	176,176,199	0.0	0.0	0.0	0,0,0
3146	0.01	0.03	0.02	157,176,197	0.0	0.0	0.0	0,0,0
3147	0.02	0.04	0.02	176,176,199	0.0	0.0	0.0	0,0,0
3148	0.02	0.04	0.02	176,176,199	0.0	0.0	0.0	0,0,0
3149	0.02	0.03	0.02	176,157,199	0.0	0.0	0.0	0,0,0
3150	0.01	0.02	0.02	161,172,199	0.0	0.0	0.0	0,0,0
3151	0.02	0.05	0.03	176,176,199	0.0	0.0	0.0	0,0,0
3152	0.01	0.03	0.02	157,176,197	0.0	0.0	0.0	0,0,0
3153	0.02	0.04	0.03	157,176,197	0.0	0.0	0.0	0,0,0
3154	0.01	0.03	0.02	157,176,197	0.0	0.0	0.0	0,0,0
3155	0.02	0.04	0.03	172,176,197	0.0	0.0	0.0	0,0,0
3156	0.01	0.02	0.02	157,176,197	0.0	0.0	0.0	0,0,0
3157	0.02	0.04	0.03	176,176,199	0.0	0.0	0.0	0,0,0
3158	0.01	0.02	0.02	157,172,197	0.0	0.0	0.0	0,0,0
3159	0.02	0.05	0.03	176,176,199	0.0	0.0	0.0	0,0,0
3160	0.01	0.02	0.02	161,176,199	0.0	0.0	0.0	0,0,0
3161	0.02	0.04	0.03	157,157,197	0.0	0.0	0.0	0,0,0
3162	0.01	0.02	0.02	161,172,199	0.0	0.0	0.0	0,0,0
3163	0.03	0.05	0.04	176,176,199	0.0	0.0	0.0	0,0,0
3164	0.01	0.02	0.02	157,172,197	0.0	0.0	0.0	0,0,0
3165	0.03	0.05	0.04	172,172,197	0.0	0.0	0.0	0,0,0
3166	0.01	0.02	0.02	157,172,197	0.0	0.0	0.0	0,0,0
3167	0.03	0.05	0.04	172,176,197	0.0	0.0	0.0	0,0,0
3168	0.01	0.02	0.02	157,172,197	0.0	0.0	0.0	0,0,0
3169	0.03	0.05	0.04	176,176,199	0.0	0.0	0.0	0,0,0
3170	0.01	0.02	0.02	157,172,197	0.0	0.0	0.0	0,0,0
3171	0.04	0.06	0.05	172,172,197	0.0	0.0	0.0	0,0,0
3172	0.03	0.05	0.05	172,172,197	0.0	0.0	0.0	0,0,0
3173	0.01	0.02	0.02	157,176,197	0.0	0.0	0.0	0,0,0
3174	0.03	0.04	0.04	176,172,199	0.0	0.0	0.0	0,0,0
3175	0.01	0.02	0.02	172,176,197	0.0	0.0	0.0	0,0,0
3176	0.03	0.04	0.03	172,172,197	0.0	0.0	0.0	0,0,0
3177	0.01	0.02	0.02	172,172,197	0.0	0.0	0.0	0,0,0
3178	0.02	0.04	0.03	172,172,197	0.0	0.0	0.0	0,0,0
3179	0.01	0.02	0.02	157,157,197	0.0	0.0	0.0	0,0,0
3180	0.03	0.04	0.04	176,176,199	0.0	0.0	0.0	0,0,0
3181	0.01	0.02	0.02	176,172,199	0.0	0.0	0.0	0,0,0
3182	0.02	0.03	0.03	157,157,197	0.0	0.0	0.0	0,0,0
3183	0.01	0.02	0.02	176,172,199	0.0	0.0	0.0	0,0,0
3184	0.02	0.03	0.03	176,172,199	0.0	0.0	0.0	0,0,0
3185	0.01	0.02	0.02	157,157,197	0.0	0.0	0.0	0,0,0
3186	0.02	0.03	0.03	172,172,197	0.0	0.0	0.0	0,0,0
3187	0.01	0.02	0.02	176,172,199	0.0	0.0	0.0	0,0,0
3188	0.02	0.03	0.02	172,157,197	0.0	0.0	0.0	0,0,0
3189	0.01	0.02	0.02	176,172,199	0.0	0.0	0.0	0,0,0
3190	0.02	0.03	0.02	157,157,197	0.0	0.0	0.0	0,0,0
3191	0.01	0.02	0.02	157,172,197	0.0	0.0	0.0	0,0,0
3192	0.02	0.03	0.03	176,176,199	0.0	0.0	0.0	0,0,0
3193	0.01	0.02	0.02	176,172,199	0.0	0.0	0.0	0,0,0
3194	0.01	0.02	0.02	157,172,197	0.0	0.0	0.0	0,0,0
3195	0.01	0.02	0.02	176,172,199	0.0	0.0	0.0	0,0,0
3196	0.01	0.02	0.02	176,176,199	0.0	0.0	0.0	0,0,0
3197	0.01	0.02	0.02	157,172,197	0.0	0.0	0.0	0,0,0
3198	0.01	0.02	0.02	172,176,197	0.0	0.0	0.0	0,0,0
3199	0.01	0.02	0.02	157,172,197	0.0	0.0	0.0	0,0,0
3200	0.01	0.02	0.02	176,172,199	0.0	0.0	0.0	0,0,0
3201	0.02	0.02	0.02	176,176,199	0.0	0.0	0.0	0,0,0
3202	0.02	0.03	0.02	176,176,199	0.0	0.0	0.0	0,0,0
3203	0.01	0.03	0.02	176,172,199	0.0	0.0	0.0	0,0,0
3204	0.01	0.03	0.02	172,176,199	0.0	0.0	0.0	0,0,0
3205	0.01	0.02	0.02	157,176,197	0.0	0.0	0.0	0,0,0
3206	0.01	0.02	0.02	176,172,199	0.0	0.0	0.0	0,0,0
3207	0.02	0.03	0.02	176,176,199	0.0	0.0	0.0	0,0,0
3208	0.01	0.02	0.02	157,172,197	0.0	0.0	0.0	0,0,0
3209	0.02	0.02	0.02	157,157,197	0.0	0.0	0.0	0,0,0

3210	0.01	0.02	0.02	172,172,197	0.0	0.0	0.0	0,0,0
3211	0.02	0.02	0.02	172,157,197	0.0	0.0	0.0	0,0,0
3212	0.01	0.02	0.02	172,172,197	0.0	0.0	0.0	0,0,0
3213	0.02	0.03	0.02	172,176,197	0.0	0.0	0.0	0,0,0
3214	0.01	0.02	0.02	157,157,197	0.0	0.0	0.0	0,0,0
3215	0.02	0.03	0.03	176,176,199	0.0	0.0	0.0	0,0,0
3216	0.01	0.02	0.02	176,172,199	0.0	0.0	0.0	0,0,0
3217	0.02	0.03	0.02	157,157,197	0.0	0.0	0.0	0,0,0
3218	0.01	0.02	0.02	176,172,199	0.0	0.0	0.0	0,0,0
3219	0.02	0.04	0.03	176,176,199	0.0	0.0	0.0	0,0,0
3220	0.01	0.02	0.02	157,157,197	0.0	0.0	0.0	0,0,0
3221	0.02	0.03	0.03	172,172,197	0.0	0.0	0.0	0,0,0
3222	0.01	0.02	0.02	172,172,197	0.0	0.0	0.0	0,0,0
3223	0.02	0.03	0.03	172,172,197	0.0	0.0	0.0	0,0,0
3224	0.01	0.02	0.02	172,176,197	0.0	0.0	0.0	0,0,0
3225	0.03	0.04	0.03	176,172,199	0.0	0.0	0.0	0,0,0
3226	0.01	0.02	0.02	157,176,197	0.0	0.0	0.0	0,0,0
3227	0.03	0.05	0.04	172,172,197	0.0	0.0	0.0	0,0,0
3228	0.03	0.05	0.04	172,172,197	0.0	0.0	0.0	0,0,0
3229	0.01	0.02	0.02	172,176,197	0.0	0.0	0.0	0,0,0
3230	0.03	0.04	0.03	176,176,199	0.0	0.0	0.0	0,0,0
3231	0.01	0.02	0.02	172,176,197	0.0	0.0	0.0	0,0,0
3232	0.02	0.03	0.03	176,172,199	0.0	0.0	0.0	0,0,0
3233	0.01	0.02	0.02	172,172,197	0.0	0.0	0.0	0,0,0
3234	0.02	0.03	0.03	176,172,199	0.0	0.0	0.0	0,0,0
3235	0.01	0.02	0.02	157,157,197	0.0	0.0	0.0	0,0,0
3236	0.02	0.03	0.03	176,176,199	0.0	0.0	0.0	0,0,0
3237	0.01	0.02	0.02	176,176,199	0.0	0.0	0.0	0,0,0
3238	0.02	0.03	0.03	157,157,197	0.0	0.0	0.0	0,0,0
3239	0.01	0.02	0.02	176,157,199	0.0	0.0	0.0	0,0,0
3240	0.02	0.03	0.03	176,176,199	0.0	0.0	0.0	0,0,0
3241	0.01	0.02	0.02	157,157,197	0.0	0.0	0.0	0,0,0
3242	0.02	0.03	0.02	176,172,199	0.0	0.0	0.0	0,0,0
3243	0.01	0.02	0.02	172,157,197	0.0	0.0	0.0	0,0,0
3244	0.02	0.02	0.02	172,172,197	0.0	0.0	0.0	0,0,0
3245	0.01	0.02	0.02	172,157,197	0.0	0.0	0.0	0,0,0
3246	0.02	0.02	0.02	157,172,197	0.0	0.0	0.0	0,0,0
3247	0.01	0.02	0.02	157,157,197	0.0	0.0	0.0	0,0,0
3248	0.02	0.02	0.02	176,176,199	0.0	0.0	0.0	0,0,0
3249	0.01	0.02	0.02	176,176,199	0.0	0.0	0.0	0,0,0
3250	0.01	0.02	0.02	157,157,197	0.0	0.0	0.0	0,0,0
3251	0.01	0.02	0.02	176,176,199	0.0	0.0	0.0	0,0,0
3252	0.01	0.02	0.02	176,176,199	0.0	0.0	0.0	0,0,0
3253	0.01	0.02	0.02	157,157,197	0.0	0.0	0.0	0,0,0
3254	0.01	0.02	0.02	176,157,199	0.0	0.0	0.0	0,0,0
3255	0.01	0.02	0.02	176,176,199	0.0	0.0	0.0	0,0,0
3256	0.02	0.02	0.02	176,176,199	0.0	0.0	0.0	0,0,0
3257	0.01	0.02	0.02	176,176,199	0.0	0.0	0.0	0,0,0
3258	0.01	0.02	0.02	172,176,197	0.0	0.0	0.0	0,0,0
3259	0.02	0.02	0.02	176,176,199	0.0	0.0	0.0	0,0,0
3260	0.02	0.02	0.02	176,176,199	0.0	0.0	0.0	0,0,0
3261	0.01	0.02	0.02	157,157,197	0.0	0.0	0.0	0,0,0
3262	0.01	0.02	0.02	176,176,199	0.0	0.0	0.0	0,0,0
3263	0.02	0.02	0.02	176,176,199	0.0	0.0	0.0	0,0,0
3264	0.01	0.02	0.02	157,176,197	0.0	0.0	0.0	0,0,0
3265	0.01	0.02	0.02	157,157,197	0.0	0.0	0.0	0,0,0
3266	0.01	0.02	0.02	157,176,197	0.0	0.0	0.0	0,0,0
3267	0.02	0.02	0.02	172,172,197	0.0	0.0	0.0	0,0,0
3268	0.01	0.02	0.02	157,157,197	0.0	0.0	0.0	0,0,0
3269	0.02	0.02	0.02	172,172,197	0.0	0.0	0.0	0,0,0
3270	0.01	0.02	0.02	157,157,197	0.0	0.0	0.0	0,0,0
3271	0.02	0.03	0.02	176,172,199	0.0	0.0	0.0	0,0,0
3272	0.01	0.02	0.02	157,176,197	0.0	0.0	0.0	0,0,0
3273	0.02	0.03	0.02	157,157,197	0.0	0.0	0.0	0,0,0
3274	0.01	0.02	0.02	176,176,199	0.0	0.0	0.0	0,0,0
3275	0.02	0.03	0.03	176,176,199	0.0	0.0	0.0	0,0,0
3276	0.01	0.02	0.02	157,157,197	0.0	0.0	0.0	0,0,0
3277	0.02	0.03	0.03	172,172,197	0.0	0.0	0.0	0,0,0
3278	0.01	0.02	0.02	157,157,197	0.0	0.0	0.0	0,0,0
3279	0.02	0.03	0.03	172,172,197	0.0	0.0	0.0	0,0,0
3280	0.01	0.02	0.02	157,176,197	0.0	0.0	0.0	0,0,0
3281	0.02	0.03	0.03	172,172,197	0.0	0.0	0.0	0,0,0
3282	0.01	0.02	0.02	157,176,197	0.0	0.0	0.0	0,0,0
3283	0.03	0.04	0.04	172,172,197	0.0	0.0	0.0	0,0,0
3284	0.03	0.04	0.03	172,172,197	0.0	0.0	0.0	0,0,0
3285	0.01	0.02	0.02	157,176,197	0.0	0.0	0.0	0,0,0
3286	0.02	0.03	0.03	176,176,199	0.0	0.0	0.0	0,0,0
3287	0.01	0.02	0.02	172,176,197	0.0	0.0	0.0	0,0,0
3288	0.02	0.03	0.03	176,172,199	0.0	0.0	0.0	0,0,0

3289	0.01	0.02	0.02	172,157,197	0.0	0.0	0.0	0,0,0
3290	0.02	0.03	0.03	176,172,199	0.0	0.0	0.0	0,0,0
3291	0.01	0.02	0.02	157,157,197	0.0	0.0	0.0	0,0,0
3292	0.02	0.03	0.03	176,176,199	0.0	0.0	0.0	0,0,0
3293	0.01	0.02	0.02	176,176,199	0.0	0.0	0.0	0,0,0
3294	0.02	0.02	0.02	157,157,197	0.0	0.0	0.0	0,0,0
3295	0.01	0.02	0.02	157,157,197	0.0	0.0	0.0	0,0,0
3296	0.02	0.02	0.02	176,172,199	0.0	0.0	0.0	0,0,0
3297	0.01	0.01	0.02	157,157,197	0.0	0.0	0.0	0,0,0
3298	0.02	0.02	0.02	176,172,199	0.0	0.0	0.0	0,0,0
3299	0.01	0.01	0.02	157,161,197	0.0	0.0	0.0	0,0,0
3300	0.02	0.02	0.02	176,176,199	0.0	0.0	0.0	0,0,0
3301	0.01	0.01	0.02	157,157,197	0.0	0.0	0.0	0,0,0
3302	0.02	0.02	0.02	176,161,199	0.0	0.0	0.0	0,0,0
3303	0.01	0.01	0.02	157,157,197	0.0	0.0	0.0	0,0,0
3304	0.02	0.02	0.02	176,176,199	0.0	0.0	0.0	0,0,0
3305	0.01	0.01	0.02	176,161,199	0.0	0.0	0.0	0,0,0
3306	0.01	0.01	0.02	157,157,197	0.0	0.0	0.0	0,0,0
3307	0.01	0.01	0.02	161,161,199	0.0	0.0	0.0	0,0,0
3308	0.01	0.01	0.02	172,157,197	0.0	0.0	0.0	0,0,0
3309	0.01	0.01	0.02	157,157,197	0.0	0.0	0.0	0,0,0
3310	0.02	0.02	0.02	176,172,199	0.0	0.0	0.0	0,0,0
3311	0.01	0.02	0.02	161,176,199	0.0	0.0	0.0	0,0,0
3312	0.01	0.02	0.02	176,176,199	0.0	0.0	0.0	0,0,0
3313	0.02	0.02	0.02	176,176,199	0.0	0.0	0.0	0,0,0
3314	0.02	0.02	0.02	176,176,199	0.0	0.0	0.0	0,0,0
3315	0.01	0.02	0.02	176,176,199	0.0	0.0	0.0	0,0,0
3316	0.01	0.01	0.02	161,176,199	0.0	0.0	0.0	0,0,0
3317	0.01	0.01	0.02	161,161,199	0.0	0.0	0.0	0,0,0
3318	0.01	0.01	0.02	161,161,199	0.0	0.0	0.0	0,0,0
3319	0.02	0.02	0.02	176,176,199	0.0	0.0	0.0	0,0,0
3320	0.01	0.02	0.02	176,176,199	0.0	0.0	0.0	0,0,0
3321	0.02	0.02	0.02	176,176,199	0.0	0.0	0.0	0,0,0
3322	0.01	0.02	0.02	176,176,199	0.0	0.0	0.0	0,0,0
3323	0.02	0.02	0.02	176,176,199	0.0	0.0	0.0	0,0,0
3324	0.01	0.02	0.02	176,176,199	0.0	0.0	0.0	0,0,0
3325	0.02	0.02	0.02	176,176,199	0.0	0.0	0.0	0,0,0
3326	0.01	0.02	0.02	176,176,199	0.0	0.0	0.0	0,0,0
3327	0.02	0.03	0.02	176,176,199	0.0	0.0	0.0	0,0,0
3328	0.02	0.02	0.02	176,176,199	0.0	0.0	0.0	0,0,0
3329	0.02	0.02	0.02	157,157,197	0.0	0.0	0.0	0,0,0
3330	0.01	0.02	0.02	176,176,199	0.0	0.0	0.0	0,0,0
3331	0.02	0.03	0.03	176,176,199	0.0	0.0	0.0	0,0,0
3332	0.01	0.02	0.02	176,176,199	0.0	0.0	0.0	0,0,0
3333	0.02	0.03	0.03	176,176,199	0.0	0.0	0.0	0,0,0
3334	0.01	0.02	0.02	176,176,199	0.0	0.0	0.0	0,0,0
3335	0.02	0.03	0.03	176,176,199	0.0	0.0	0.0	0,0,0
3336	0.01	0.02	0.02	176,176,199	0.0	0.0	0.0	0,0,0
3337	0.02	0.03	0.03	176,176,199	0.0	0.0	0.0	0,0,0
3338	0.02	0.03	0.02	176,176,199	0.0	0.0	0.0	0,0,0
3339	0.02	0.04	0.03	172,172,197	0.0	0.0	0.0	0,0,0
3340	0.02	0.03	0.03	176,176,199	0.0	0.0	0.0	0,0,0
3341	0.01	0.02	0.02	176,176,199	0.0	0.0	0.0	0,0,0
3342	0.02	0.02	0.02	176,176,199	0.0	0.0	0.0	0,0,0
3343	0.01	0.02	0.02	176,176,199	0.0	0.0	0.0	0,0,0
3344	0.02	0.02	0.02	176,172,199	0.0	0.0	0.0	0,0,0
3345	0.01	0.02	0.02	176,176,199	0.0	0.0	0.0	0,0,0
3346	0.01	0.02	0.02	176,176,199	0.0	0.0	0.0	0,0,0
3347	0.01	0.02	0.02	176,176,199	0.0	0.0	0.0	0,0,0
3348	0.01	0.02	0.02	176,176,199	0.0	0.0	0.0	0,0,0
3349	0.01	0.02	0.02	176,176,199	0.0	0.0	0.0	0,0,0
3350	0.01	0.02	0.02	157,161,197	0.0	0.0	0.0	0,0,0
3351	0.01	0.02	0.02	176,176,199	0.0	0.0	0.0	0,0,0
3352	0.01	0.02	0.02	176,176,199	0.0	0.0	0.0	0,0,0
3353	0.01	0.01	0.01	161,176,199	0.0	0.0	0.0	0,0,0
3354	0.01	0.02	0.02	176,176,199	0.0	0.0	0.0	0,0,0
3355	0.01	0.01	0.01	161,176,199	0.0	0.0	0.0	0,0,0
3356	0.01	0.02	0.02	161,176,199	0.0	0.0	0.0	0,0,0
3357	0.01	0.01	0.01	161,176,199	0.0	0.0	0.0	0,0,0
3358	0.01	0.01	0.02	161,161,199	0.0	0.0	0.0	0,0,0
3359	0.01	0.01	0.01	161,176,199	0.0	0.0	0.0	0,0,0
3360	0.01	0.02	0.02	176,176,199	0.0	0.0	0.0	0,0,0
3361	0.01	0.01	0.01	161,161,199	0.0	0.0	0.0	0,0,0
3362	0.01	0.01	0.02	157,161,197	0.0	0.0	0.0	0,0,0
3363	0.01	0.01	0.02	176,176,199	0.0	0.0	0.0	0,0,0
3364	0.01	0.02	0.02	172,172,197	0.0	0.0	0.0	0,0,0
3365	0.01	0.02	0.02	161,172,199	0.0	0.0	0.0	0,0,0
3366	0.01	0.02	0.02	176,176,199	0.0	0.0	0.0	0,0,0
3367	0.01	0.02	0.02	176,176,199	0.0	0.0	0.0	0,0,0

3368	0.01	0.02	0.02	176,176,199	0.0	0.0	0.0	0,0,0
3369	0.01	0.02	0.02	176,176,199	0.0	0.0	0.0	0,0,0
3370	0.01	0.01	0.01	161,161,199	0.0	0.0	0.0	0,0,0
3371	0.01	0.01	0.01	161,176,199	0.0	0.0	0.0	0,0,0
3372	0.01	0.01	0.02	176,176,199	0.0	0.0	0.0	0,0,0
3373	0.01	0.02	0.02	157,161,197	0.0	0.0	0.0	0,0,0
3374	0.01	0.01	0.02	161,176,199	0.0	0.0	0.0	0,0,0
3375	0.01	0.02	0.02	176,176,199	0.0	0.0	0.0	0,0,0
3376	0.01	0.02	0.01	157,176,197	0.0	0.0	0.0	0,0,0
3377	0.01	0.02	0.01	157,162,197	0.0	0.0	0.0	0,0,0
3378	0.01	0.02	0.01	157,176,197	0.0	0.0	0.0	0,0,0
3379	0.01	0.02	0.01	157,176,197	0.0	0.0	0.0	0,0,0
3380	0.01	0.02	0.01	157,176,197	0.0	0.0	0.0	0,0,0
3381	0.01	0.02	0.01	157,176,197	0.0	0.0	0.0	0,0,0
3382	0.01	0.02	0.01	157,162,197	0.0	0.0	0.0	0,0,0
3383	0.01	0.02	0.01	157,176,197	0.0	0.0	0.0	0,0,0
3384	0.01	0.02	0.02	176,176,199	0.0	0.0	0.0	0,0,0
3385	0.01	0.02	0.02	161,161,199	0.0	0.0	0.0	0,0,0
3386	0.01	0.02	0.02	176,176,199	0.0	0.0	0.0	0,0,0
3387	0.01	0.02	0.02	176,176,199	0.0	0.0	0.0	0,0,0
3388	0.01	0.02	0.01	157,176,197	0.0	0.0	0.0	0,0,0
3389	0.01	0.02	0.02	176,161,199	0.0	0.0	0.0	0,0,0
3390	0.01	0.02	0.01	157,176,197	0.0	0.0	0.0	0,0,0
3391	0.01	0.02	0.02	176,176,199	0.0	0.0	0.0	0,0,0
3392	0.01	0.02	0.01	161,157,199	0.0	0.0	0.0	0,0,0
3393	0.01	0.02	0.02	176,176,199	0.0	0.0	0.0	0,0,0
3394	0.01	0.02	0.01	161,157,199	0.0	0.0	0.0	0,0,0
3395	0.02	0.03	0.02	176,176,199	0.0	0.0	0.0	0,0,0
4008	0.04	0.07	0.06	172,172,197	0.0	0.0	0.0	0,0,0
4009	0.01	0.02	0.02	161,176,199	0.0	0.0	0.0	0,0,0
4010	0.03	0.05	0.04	176,176,199	0.0	0.0	0.0	0,0,0
4011	0.01	0.02	0.02	176,176,199	0.0	0.0	0.0	0,0,0
4012	0.03	0.04	0.04	176,176,199	0.0	0.0	0.0	0,0,0
4013	0.01	0.02	0.02	176,176,199	0.0	0.0	0.0	0,0,0
4014	0.02	0.04	0.03	172,176,197	0.0	0.0	0.0	0,0,0
4015	0.01	0.02	0.02	157,176,197	0.0	0.0	0.0	0,0,0
4016	0.03	0.05	0.04	176,176,199	0.0	0.0	0.0	0,0,0
4017	0.01	0.02	0.02	176,161,199	0.0	0.0	0.0	0,0,0
4018	0.02	0.02	0.03	157,157,197	0.0	0.0	0.0	0,0,0
4019	0.02	0.03	0.02	176,176,199	0.0	0.0	0.0	0,0,0
4020	0.03	0.04	0.04	176,176,199	0.0	0.0	0.0	0,0,0
4021	0.01	0.02	0.02	172,157,197	0.0	0.0	0.0	0,0,0
4022	0.02	0.04	0.03	176,176,199	0.0	0.0	0.0	0,0,0
4023	0.01	0.02	0.02	176,176,199	0.0	0.0	0.0	0,0,0
4024	0.02	0.03	0.03	176,172,199	0.0	0.0	0.0	0,0,0
4025	0.01	0.02	0.02	176,176,199	0.0	0.0	0.0	0,0,0
4026	0.02	0.03	0.02	157,172,197	0.0	0.0	0.0	0,0,0
4027	0.01	0.03	0.02	157,176,197	0.0	0.0	0.0	0,0,0
4028	0.03	0.04	0.03	176,176,199	0.0	0.0	0.0	0,0,0
4029	0.01	0.02	0.02	157,157,197	0.0	0.0	0.0	0,0,0
4030	0.01	0.02	0.02	157,157,197	0.0	0.0	0.0	0,0,0
4031	0.02	0.03	0.02	176,176,199	0.0	0.0	0.0	0,0,0
4032	0.02	0.04	0.03	176,176,199	0.0	0.0	0.0	0,0,0
4033	0.01	0.02	0.02	172,172,197	0.0	0.0	0.0	0,0,0
4034	0.02	0.03	0.02	176,176,199	0.0	0.0	0.0	0,0,0
4035	0.02	0.03	0.02	176,176,199	0.0	0.0	0.0	0,0,0
4036	0.02	0.03	0.02	176,176,199	0.0	0.0	0.0	0,0,0
4037	0.02	0.03	0.02	172,172,197	0.0	0.0	0.0	0,0,0
4038	0.01	0.03	0.02	172,172,197	0.0	0.0	0.0	0,0,0
4039	0.02	0.04	0.02	176,176,199	0.0	0.0	0.0	0,0,0
4040	0.02	0.04	0.03	176,176,199	0.0	0.0	0.0	0,0,0
4041	0.01	0.02	0.02	157,157,197	0.0	0.0	0.0	0,0,0
4042	0.01	0.02	0.02	157,157,197	0.0	0.0	0.0	0,0,0
4043	0.03	0.05	0.03	176,176,199	0.0	0.0	0.0	0,0,0
4044	0.02	0.03	0.02	176,176,199	0.0	0.0	0.0	0,0,0
4045	0.02	0.03	0.02	157,172,197	0.0	0.0	0.0	0,0,0
4046	0.02	0.03	0.02	176,176,199	0.0	0.0	0.0	0,0,0
4047	0.02	0.04	0.03	176,172,199	0.0	0.0	0.0	0,0,0
4048	0.02	0.02	0.02	176,176,199	0.0	0.0	0.0	0,0,0
4049	0.02	0.04	0.03	176,176,199	0.0	0.0	0.0	0,0,0
4050	0.01	0.02	0.02	172,172,197	0.0	0.0	0.0	0,0,0
4051	0.03	0.05	0.03	176,176,199	0.0	0.0	0.0	0,0,0
4052	0.02	0.03	0.02	176,176,199	0.0	0.0	0.0	0,0,0
4053	0.02	0.03	0.02	157,172,197	0.0	0.0	0.0	0,0,0
4054	0.01	0.02	0.02	176,157,199	0.0	0.0	0.0	0,0,0
4055	0.03	0.06	0.04	176,176,199	0.0	0.0	0.0	0,0,0
4056	0.01	0.03	0.02	157,176,197	0.0	0.0	0.0	0,0,0
4057	0.02	0.04	0.03	172,176,197	0.0	0.0	0.0	0,0,0
4058	0.02	0.02	0.02	176,176,199	0.0	0.0	0.0	0,0,0

4059	0.03	0.05	0.04	176,176,199	0.0	0.0	0.0	0,0,0
4060	0.02	0.02	0.02	176,176,199	0.0	0.0	0.0	0,0,0
4061	0.03	0.05	0.04	176,176,199	0.0	0.0	0.0	0,0,0
4062	0.01	0.03	0.02	161,176,199	0.0	0.0	0.0	0,0,0
4063	0.04	0.08	0.06	172,172,197	0.0	0.0	0.0	0,0,0
4064	0.04	0.05	0.05	172,172,197	0.0	0.0	0.0	0,0,0
4065	0.01	0.02	0.02	172,176,197	0.0	0.0	0.0	0,0,0
4066	0.02	0.03	0.03	172,176,197	0.0	0.0	0.0	0,0,0
4067	0.01	0.02	0.02	176,176,199	0.0	0.0	0.0	0,0,0
4068	0.02	0.03	0.03	176,172,199	0.0	0.0	0.0	0,0,0
4069	0.01	0.02	0.02	176,172,199	0.0	0.0	0.0	0,0,0
4070	0.02	0.03	0.03	161,172,199	0.0	0.0	0.0	0,0,0
4071	0.01	0.01	0.02	157,172,197	0.0	0.0	0.0	0,0,0
4072	0.02	0.03	0.03	176,176,199	0.0	0.0	0.0	0,0,0
4073	0.01	0.02	0.02	176,176,199	0.0	0.0	0.0	0,0,0
4074	0.02	0.03	0.03	172,157,197	0.0	0.0	0.0	0,0,0
4075	0.01	0.01	0.02	157,172,197	0.0	0.0	0.0	0,0,0
4076	0.02	0.03	0.03	176,176,199	0.0	0.0	0.0	0,0,0
4077	0.01	0.02	0.02	172,176,197	0.0	0.0	0.0	0,0,0
4078	0.02	0.02	0.02	176,157,199	0.0	0.0	0.0	0,0,0
4079	0.01	0.02	0.02	172,176,197	0.0	0.0	0.0	0,0,0
4080	0.02	0.02	0.02	176,172,199	0.0	0.0	0.0	0,0,0
4081	0.01	0.02	0.02	172,176,197	0.0	0.0	0.0	0,0,0
4082	0.01	0.01	0.02	157,157,197	0.0	0.0	0.0	0,0,0
4083	0.01	0.01	0.01	157,172,197	0.0	0.0	0.0	0,0,0
4084	0.02	0.02	0.02	176,176,199	0.0	0.0	0.0	0,0,0
4085	0.01	0.01	0.02	176,176,199	0.0	0.0	0.0	0,0,0
4086	0.01	0.02	0.02	157,157,197	0.0	0.0	0.0	0,0,0
4087	0.01	0.01	0.02	157,172,197	0.0	0.0	0.0	0,0,0
4088	0.01	0.02	0.02	176,172,199	0.0	0.0	0.0	0,0,0
4089	0.01	0.02	0.01	172,176,197	0.0	0.0	0.0	0,0,0
4090	0.01	0.01	0.02	176,172,199	0.0	0.0	0.0	0,0,0
4091	0.01	0.02	0.02	172,176,197	0.0	0.0	0.0	0,0,0
4092	0.01	0.02	0.02	172,176,197	0.0	0.0	0.0	0,0,0
4093	0.01	0.01	0.01	172,176,197	0.0	0.0	0.0	0,0,0
4094	0.01	0.01	0.01	172,176,197	0.0	0.0	0.0	0,0,0
4095	0.01	0.01	0.02	176,172,199	0.0	0.0	0.0	0,0,0
4096	0.01	0.01	0.02	157,172,197	0.0	0.0	0.0	0,0,0
4097	0.01	0.01	0.02	172,157,197	0.0	0.0	0.0	0,0,0
4098	0.01	0.01	0.02	176,176,199	0.0	0.0	0.0	0,0,0
4099	0.02	0.02	0.02	176,176,199	0.0	0.0	0.0	0,0,0
4100	0.01	0.02	0.02	157,172,197	0.0	0.0	0.0	0,0,0
4101	0.01	0.02	0.02	157,172,197	0.0	0.0	0.0	0,0,0
4102	0.01	0.02	0.02	172,176,197	0.0	0.0	0.0	0,0,0
4103	0.02	0.02	0.02	176,172,199	0.0	0.0	0.0	0,0,0
4104	0.01	0.02	0.02	172,176,197	0.0	0.0	0.0	0,0,0
4105	0.02	0.02	0.02	176,172,199	0.0	0.0	0.0	0,0,0
4106	0.01	0.02	0.02	172,176,197	0.0	0.0	0.0	0,0,0
4107	0.02	0.03	0.03	176,176,199	0.0	0.0	0.0	0,0,0
4108	0.01	0.02	0.02	172,172,197	0.0	0.0	0.0	0,0,0
4109	0.02	0.03	0.03	172,157,197	0.0	0.0	0.0	0,0,0
4110	0.01	0.02	0.02	176,176,199	0.0	0.0	0.0	0,0,0
4111	0.02	0.03	0.03	176,176,199	0.0	0.0	0.0	0,0,0
4112	0.01	0.02	0.02	157,172,197	0.0	0.0	0.0	0,0,0
4113	0.02	0.03	0.03	161,172,199	0.0	0.0	0.0	0,0,0
4114	0.01	0.02	0.02	176,172,199	0.0	0.0	0.0	0,0,0
4115	0.02	0.03	0.03	176,176,199	0.0	0.0	0.0	0,0,0
4116	0.01	0.02	0.02	176,176,199	0.0	0.0	0.0	0,0,0
4117	0.02	0.04	0.03	172,176,197	0.0	0.0	0.0	0,0,0
4118	0.01	0.02	0.02	172,176,197	0.0	0.0	0.0	0,0,0
4119	0.04	0.06	0.05	172,172,197	0.0	0.0	0.0	0,0,0
4120	0.03	0.04	0.04	172,172,197	0.0	0.0	0.0	0,0,0
4121	0.01	0.02	0.02	172,176,197	0.0	0.0	0.0	0,0,0
4122	0.02	0.03	0.03	176,172,199	0.0	0.0	0.0	0,0,0
4123	0.01	0.02	0.02	176,172,199	0.0	0.0	0.0	0,0,0
4124	0.02	0.03	0.03	176,172,199	0.0	0.0	0.0	0,0,0
4125	0.01	0.01	0.02	176,172,199	0.0	0.0	0.0	0,0,0
4126	0.02	0.03	0.03	176,172,199	0.0	0.0	0.0	0,0,0
4127	0.01	0.01	0.02	157,157,197	0.0	0.0	0.0	0,0,0
4128	0.02	0.03	0.03	176,176,199	0.0	0.0	0.0	0,0,0
4129	0.01	0.01	0.02	176,172,199	0.0	0.0	0.0	0,0,0
4130	0.02	0.02	0.03	157,172,197	0.0	0.0	0.0	0,0,0
4131	0.01	0.01	0.02	172,157,197	0.0	0.0	0.0	0,0,0
4132	0.02	0.02	0.03	176,172,199	0.0	0.0	0.0	0,0,0
4133	0.01	0.01	0.02	172,172,197	0.0	0.0	0.0	0,0,0
4134	0.02	0.02	0.02	176,172,199	0.0	0.0	0.0	0,0,0
4135	0.01	0.01	0.02	172,157,197	0.0	0.0	0.0	0,0,0
4136	0.02	0.02	0.02	176,172,199	0.0	0.0	0.0	0,0,0
4137	0.01	9.25e-03	0.02	172,157,197	0.0	0.0	0.0	0,0,0

4138	0.01	0.02	0.02	157,172,197	0.0	0.0	0.0	0,0,0
4139	0.01	8.22e-03	0.01	157,157,197	0.0	0.0	0.0	0,0,0
4140	0.02	0.01	0.02	176,176,199	0.0	0.0	0.0	0,0,0
4141	0.01	9.67e-03	0.02	161,157,199	0.0	0.0	0.0	0,0,0
4142	0.01	0.01	0.02	157,157,197	0.0	0.0	0.0	0,0,0
4143	0.01	8.91e-03	0.02	157,157,197	0.0	0.0	0.0	0,0,0
4144	0.01	0.01	0.02	176,172,199	0.0	0.0	0.0	0,0,0
4145	0.01	8.24e-03	0.01	172,157,197	0.0	0.0	0.0	0,0,0
4146	0.01	0.01	0.02	176,172,199	0.0	0.0	0.0	0,0,0
4147	0.01	9.38e-03	0.02	172,172,197	0.0	0.0	0.0	0,0,0
4148	0.01	0.01	0.02	176,172,199	0.0	0.0	0.0	0,0,0
4149	0.01	8.54e-03	0.02	172,172,197	0.0	0.0	0.0	0,0,0
4150	0.01	8.80e-03	0.01	157,172,197	0.0	0.0	0.0	0,0,0
4151	0.01	9.66e-03	0.02	176,172,199	0.0	0.0	0.0	0,0,0
4152	0.01	8.85e-03	0.02	157,157,197	0.0	0.0	0.0	0,0,0
4153	0.01	0.01	0.02	157,157,197	0.0	0.0	0.0	0,0,0
4154	0.01	9.87e-03	0.02	161,157,199	0.0	0.0	0.0	0,0,0
4155	0.01	0.01	0.02	176,176,199	0.0	0.0	0.0	0,0,0
4156	0.01	9.02e-03	0.01	157,157,197	0.0	0.0	0.0	0,0,0
4157	0.01	0.01	0.02	157,172,197	0.0	0.0	0.0	0,0,0
4158	0.01	0.01	0.02	172,157,197	0.0	0.0	0.0	0,0,0
4159	0.02	0.02	0.02	176,172,199	0.0	0.0	0.0	0,0,0
4160	0.01	0.01	0.02	172,157,197	0.0	0.0	0.0	0,0,0
4161	0.02	0.02	0.02	176,172,199	0.0	0.0	0.0	0,0,0
4162	0.01	0.01	0.02	172,157,197	0.0	0.0	0.0	0,0,0
4163	0.02	0.02	0.02	176,172,199	0.0	0.0	0.0	0,0,0
4164	0.01	0.01	0.02	176,157,199	0.0	0.0	0.0	0,0,0
4165	0.02	0.03	0.02	172,172,197	0.0	0.0	0.0	0,0,0
4166	0.01	0.02	0.02	176,176,199	0.0	0.0	0.0	0,0,0
4167	0.02	0.03	0.03	176,176,199	0.0	0.0	0.0	0,0,0
4168	0.01	0.02	0.02	157,157,197	0.0	0.0	0.0	0,0,0
4169	0.02	0.03	0.03	176,172,199	0.0	0.0	0.0	0,0,0
4170	0.01	0.02	0.02	176,172,199	0.0	0.0	0.0	0,0,0
4171	0.02	0.03	0.03	176,172,199	0.0	0.0	0.0	0,0,0
4172	0.01	0.02	0.02	176,172,199	0.0	0.0	0.0	0,0,0
4173	0.02	0.04	0.03	176,172,199	0.0	0.0	0.0	0,0,0
4174	0.01	0.02	0.02	172,172,197	0.0	0.0	0.0	0,0,0
4175	0.03	0.05	0.04	172,172,197	0.0	0.0	0.0	0,0,0
4176	0.02	0.03	0.03	172,172,197	0.0	0.0	0.0	0,0,0
4177	0.01	0.02	0.02	157,176,197	0.0	0.0	0.0	0,0,0
4178	0.02	0.03	0.03	172,172,197	0.0	0.0	0.0	0,0,0
4179	0.01	0.02	0.02	172,172,197	0.0	0.0	0.0	0,0,0
4180	0.02	0.02	0.03	176,172,199	0.0	0.0	0.0	0,0,0
4181	0.01	0.01	0.02	157,157,197	0.0	0.0	0.0	0,0,0
4182	0.02	0.02	0.02	176,172,199	0.0	0.0	0.0	0,0,0
4183	0.01	0.01	0.02	157,157,197	0.0	0.0	0.0	0,0,0
4184	0.02	0.02	0.02	176,176,199	0.0	0.0	0.0	0,0,0
4185	0.01	0.01	0.02	157,157,197	0.0	0.0	0.0	0,0,0
4186	0.02	0.02	0.02	157,157,197	0.0	0.0	0.0	0,0,0
4187	0.01	9.94e-03	0.02	157,157,197	0.0	0.0	0.0	0,0,0
4188	0.02	0.01	0.02	176,157,199	0.0	0.0	0.0	0,0,0
4189	0.01	8.27e-03	0.01	157,157,197	0.0	0.0	0.0	0,0,0
4190	0.02	0.01	0.02	176,157,199	0.0	0.0	0.0	0,0,0
4191	0.01	7.04e-03	0.01	157,157,197	0.0	0.0	0.0	0,0,0
4192	0.01	0.01	0.02	172,157,197	0.0	0.0	0.0	0,0,0
4193	0.01	5.92e-03	0.01	157,157,197	0.0	0.0	0.0	0,0,0
4194	0.01	9.46e-03	0.02	172,157,197	0.0	0.0	0.0	0,0,0
4195	0.01	5.07e-03	0.01	157,157,197	0.0	0.0	0.0	0,0,0
4196	0.01	9.31e-03	0.02	176,176,199	0.0	0.0	0.0	0,0,0
4197	0.01	6.38e-03	0.02	157,157,197	0.0	0.0	0.0	0,0,0
4198	0.01	6.47e-03	0.02	157,157,197	0.0	0.0	0.0	0,0,0
4199	0.01	5.82e-03	0.02	157,157,197	0.0	0.0	0.0	0,0,0
4200	0.01	5.90e-03	0.02	172,157,197	0.0	0.0	0.0	0,0,0
4201	0.01	4.69e-03	0.01	157,157,197	0.0	0.0	0.0	0,0,0
4202	0.01	5.71e-03	0.02	176,157,199	0.0	0.0	0.0	0,0,0
4203	0.01	4.42e-03	0.01	157,157,197	0.0	0.0	0.0	0,0,0
4204	0.01	5.09e-03	0.01	157,157,197	0.0	0.0	0.0	0,0,0
4205	0.01	4.51e-03	0.01	157,157,197	0.0	0.0	0.0	0,0,0
4206	0.01	4.70e-03	0.01	157,157,197	0.0	0.0	0.0	0,0,0
4207	0.01	5.38e-03	0.01	176,157,199	0.0	0.0	0.0	0,0,0
4208	0.01	6.06e-03	0.02	157,157,197	0.0	0.0	0.0	0,0,0
4209	0.01	6.81e-03	0.02	157,157,197	0.0	0.0	0.0	0,0,0
4210	0.01	6.42e-03	0.02	157,157,197	0.0	0.0	0.0	0,0,0
4211	0.01	7.54e-03	0.02	176,161,199	0.0	0.0	0.0	0,0,0
4212	0.01	5.04e-03	0.01	157,157,197	0.0	0.0	0.0	0,0,0
4213	0.01	8.29e-03	0.02	157,157,197	0.0	0.0	0.0	0,0,0
4214	0.01	5.54e-03	0.01	157,157,197	0.0	0.0	0.0	0,0,0
4215	0.01	9.80e-03	0.02	157,157,197	0.0	0.0	0.0	0,0,0
4216	0.01	6.53e-03	0.01	157,157,197	0.0	0.0	0.0	0,0,0

4217	0.01	0.01	0.02	157,157,197	0.0	0.0	0.0	0,0,0
4218	0.01	7.76e-03	0.01	157,157,197	0.0	0.0	0.0	0,0,0
4219	0.01	0.01	0.02	176,157,199	0.0	0.0	0.0	0,0,0
4220	0.01	9.24e-03	0.02	157,157,197	0.0	0.0	0.0	0,0,0
4221	0.02	0.02	0.02	157,157,197	0.0	0.0	0.0	0,0,0
4222	0.01	0.01	0.02	161,157,199	0.0	0.0	0.0	0,0,0
4223	0.02	0.02	0.02	176,176,199	0.0	0.0	0.0	0,0,0
4224	0.01	0.01	0.02	157,157,197	0.0	0.0	0.0	0,0,0
4225	0.02	0.02	0.02	176,172,199	0.0	0.0	0.0	0,0,0
4226	0.01	0.01	0.02	157,157,197	0.0	0.0	0.0	0,0,0
4227	0.02	0.02	0.02	176,172,199	0.0	0.0	0.0	0,0,0
4228	0.01	0.02	0.02	172,172,197	0.0	0.0	0.0	0,0,0
4229	0.02	0.03	0.03	172,172,197	0.0	0.0	0.0	0,0,0
4230	0.01	0.02	0.02	157,172,197	0.0	0.0	0.0	0,0,0
4231	0.02	0.04	0.03	172,172,197	0.0	0.0	0.0	0,0,0
4232	0.02	0.02	0.02	176,176,199	0.0	0.0	0.0	0,0,0
4233	0.01	0.02	0.02	176,176,199	0.0	0.0	0.0	0,0,0
4234	0.01	0.02	0.02	176,176,199	0.0	0.0	0.0	0,0,0
4235	0.01	0.02	0.01	176,176,199	0.0	0.0	0.0	0,0,0
4236	0.01	0.02	0.02	176,176,199	0.0	0.0	0.0	0,0,0
4237	0.01	0.01	0.01	176,176,199	0.0	0.0	0.0	0,0,0
4238	0.01	0.01	0.02	176,157,199	0.0	0.0	0.0	0,0,0
4239	0.01	0.01	0.01	176,161,199	0.0	0.0	0.0	0,0,0
4240	0.01	0.01	0.02	176,172,199	0.0	0.0	0.0	0,0,0
4241	0.01	0.01	0.01	176,176,199	0.0	0.0	0.0	0,0,0
4242	0.01	0.01	0.02	157,157,197	0.0	0.0	0.0	0,0,0
4243	0.01	0.01	0.01	176,157,199	0.0	0.0	0.0	0,0,0
4244	0.01	0.01	0.01	172,157,197	0.0	0.0	0.0	0,0,0
4245	9.38e-03	9.83e-03	0.01	161,157,199	0.0	0.0	0.0	0,0,0
4246	0.01	0.01	0.01	157,157,197	0.0	0.0	0.0	0,0,0
4247	9.28e-03	9.10e-03	0.01	161,157,199	0.0	0.0	0.0	0,0,0
4248	0.01	9.93e-03	0.01	157,157,197	0.0	0.0	0.0	0,0,0
4249	9.23e-03	8.86e-03	0.01	161,157,199	0.0	0.0	0.0	0,0,0
4250	0.01	9.91e-03	0.01	157,157,197	0.0	0.0	0.0	0,0,0
4251	9.16e-03	9.21e-03	0.01	161,157,199	0.0	0.0	0.0	0,0,0
4252	0.01	0.01	0.01	176,157,199	0.0	0.0	0.0	0,0,0
4253	9.53e-03	9.67e-03	0.01	157,157,197	0.0	0.0	0.0	0,0,0
4254	0.01	0.01	0.01	157,157,197	0.0	0.0	0.0	0,0,0
4255	9.88e-03	9.60e-03	0.01	161,157,199	0.0	0.0	0.0	0,0,0
4256	9.95e-03	9.90e-03	0.01	157,157,197	0.0	0.0	0.0	0,0,0
4257	9.10e-03	9.23e-03	0.01	157,157,197	0.0	0.0	0.0	0,0,0
4258	9.99e-03	9.46e-03	0.01	157,157,197	0.0	0.0	0.0	0,0,0
4259	9.07e-03	8.80e-03	0.01	157,157,197	0.0	0.0	0.0	0,0,0
4260	9.58e-03	8.73e-03	0.01	157,157,197	0.0	0.0	0.0	0,0,0
4261	9.47e-03	8.70e-03	0.01	157,157,197	0.0	0.0	0.0	0,0,0
4262	9.36e-03	8.85e-03	0.01	157,157,197	0.0	0.0	0.0	0,0,0
4263	9.75e-03	9.50e-03	0.01	157,157,197	0.0	0.0	0.0	0,0,0
4264	9.95e-03	9.54e-03	0.01	161,157,199	0.0	0.0	0.0	0,0,0
4265	0.01	0.01	0.01	157,157,197	0.0	0.0	0.0	0,0,0
4266	0.01	9.56e-03	0.01	157,157,197	0.0	0.0	0.0	0,0,0
4267	0.01	9.65e-03	0.01	176,157,199	0.0	0.0	0.0	0,0,0
4268	9.71e-03	8.62e-03	0.01	176,157,199	0.0	0.0	0.0	0,0,0
4269	9.99e-03	8.72e-03	0.01	176,157,199	0.0	0.0	0.0	0,0,0
4270	9.92e-03	8.33e-03	0.01	176,157,199	0.0	0.0	0.0	0,0,0
4271	0.01	8.66e-03	0.01	176,157,199	0.0	0.0	0.0	0,0,0
4272	0.01	8.79e-03	0.01	176,157,199	0.0	0.0	0.0	0,0,0
4273	0.01	9.44e-03	0.01	176,157,199	0.0	0.0	0.0	0,0,0
4274	0.01	9.70e-03	0.01	176,157,199	0.0	0.0	0.0	0,0,0
4275	0.01	0.01	0.01	176,157,199	0.0	0.0	0.0	0,0,0
4276	0.01	0.01	0.01	176,157,199	0.0	0.0	0.0	0,0,0
4277	0.01	0.01	0.02	157,157,197	0.0	0.0	0.0	0,0,0
4278	0.01	0.01	0.01	172,161,197	0.0	0.0	0.0	0,0,0
4279	0.01	0.01	0.02	176,161,199	0.0	0.0	0.0	0,0,0
4280	0.01	0.01	0.01	176,176,199	0.0	0.0	0.0	0,0,0
4281	0.01	0.01	0.02	176,157,199	0.0	0.0	0.0	0,0,0
4282	0.01	0.01	0.01	176,176,199	0.0	0.0	0.0	0,0,0
4283	0.01	0.02	0.02	176,172,199	0.0	0.0	0.0	0,0,0
4284	0.01	0.02	0.01	176,176,199	0.0	0.0	0.0	0,0,0
4285	0.01	0.02	0.02	176,176,199	0.0	0.0	0.0	0,0,0
4286	0.01	0.02	0.02	176,176,199	0.0	0.0	0.0	0,0,0
4287	0.02	0.02	0.02	176,176,199	0.0	0.0	0.0	0,0,0
4489	0.11	0.20	0.13	172,172,197	0.0	0.0	0.0	0,0,0
4490	0.16	0.29	0.17	172,176,199	0.0	0.0	0.0	0,0,0
4491	0.09	0.17	0.11	172,172,197	0.0	0.0	0.0	0,0,0
4492	0.10	0.19	0.12	172,172,197	0.0	0.0	0.0	0,0,0
4493	0.11	0.20	0.13	172,172,197	0.0	0.0	0.0	0,0,0
4494	0.11	0.20	0.13	172,172,197	0.0	0.0	0.0	0,0,0
4495	0.11	0.20	0.13	172,172,197	0.0	0.0	0.0	0,0,0
4496	0.09	0.17	0.11	172,172,197	0.0	0.0	0.0	0,0,0

4497	0.07	0.13	0.09	172,172,197	0.0	0.0	0.0	0,0,0
4498	0.13	0.22	0.15	172,172,197	0.0	0.0	0.0	0,0,0
4499	0.36	0.60	0.43	172,172,197	0.11	0.15	0.15	172,193,197
4500	0.30	0.51	0.34	172,172,197	0.09	0.0	0.0	172,0,0
4501	0.12	0.22	0.14	172,172,197	0.0	0.0	0.0	0,0,0
4502	0.08	0.16	0.10	172,172,197	0.0	0.0	0.0	0,0,0
4503	0.10	0.19	0.12	172,172,197	0.0	0.0	0.0	0,0,0
4504	0.11	0.21	0.13	172,172,197	0.0	0.0	0.0	0,0,0
4505	0.11	0.22	0.13	172,172,197	0.0	0.0	0.0	0,0,0
4506	0.11	0.22	0.13	172,172,197	0.0	0.0	0.0	0,0,0
4507	0.11	0.21	0.12	172,172,197	0.0	0.0	0.0	0,0,0
4508	0.10	0.18	0.11	172,172,197	0.0	0.0	0.0	0,0,0
4509	0.08	0.15	0.09	172,172,197	0.0	0.0	0.0	0,0,0
4510	0.13	0.24	0.16	172,172,197	0.0	0.0	0.0	0,0,0
4511	0.34	0.59	0.40	172,172,197	0.11	0.14	0.13	172,193,197
4512	0.34	0.58	0.40	172,172,197	0.11	0.13	0.13	172,193,197
4513	0.13	0.24	0.15	172,172,197	0.0	0.0	0.0	0,0,0
4514	0.08	0.15	0.09	172,172,197	0.0	0.0	0.0	0,0,0
4515	0.10	0.18	0.11	172,172,197	0.0	0.0	0.0	0,0,0
4516	0.11	0.21	0.12	172,172,197	0.0	0.0	0.0	0,0,0
4517	0.11	0.22	0.13	172,172,197	0.0	0.0	0.0	0,0,0
4518	0.11	0.22	0.13	172,172,197	0.0	0.0	0.0	0,0,0
4519	0.11	0.21	0.12	172,172,197	0.0	0.0	0.0	0,0,0
4520	0.10	0.18	0.11	172,172,197	0.0	0.0	0.0	0,0,0
4521	0.08	0.15	0.09	172,172,197	0.0	0.0	0.0	0,0,0
4522	0.13	0.24	0.15	172,172,197	0.0	0.0	0.0	0,0,0
4523	0.34	0.58	0.39	172,172,197	0.11	0.13	0.12	172,193,197
4524	0.35	0.59	0.41	172,172,197	0.11	0.14	0.13	172,193,197
4525	0.13	0.25	0.16	172,172,197	0.0	0.0	0.0	0,0,0
4526	0.08	0.15	0.09	172,172,197	0.0	0.0	0.0	0,0,0
4527	0.10	0.18	0.11	172,172,197	0.0	0.0	0.0	0,0,0
4528	0.11	0.21	0.12	172,172,197	0.0	0.0	0.0	0,0,0
4529	0.11	0.22	0.13	172,172,197	0.0	0.0	0.0	0,0,0
4530	0.11	0.22	0.13	172,172,197	0.0	0.0	0.0	0,0,0
4531	0.11	0.21	0.13	172,172,197	0.0	0.0	0.0	0,0,0
4532	0.10	0.19	0.11	172,172,197	0.0	0.0	0.0	0,0,0
4533	0.08	0.16	0.10	172,172,197	0.0	0.0	0.0	0,0,0
4534	0.12	0.22	0.14	172,172,197	0.0	0.0	0.0	0,0,0
4535	0.29	0.50	0.34	172,172,197	0.09	0.0	0.0	172,0,0
4536	0.36	0.60	0.43	172,172,197	0.11	0.15	0.15	172,193,197
4537	0.13	0.23	0.15	172,172,197	0.0	0.0	0.0	0,0,0
4538	0.07	0.13	0.09	172,172,197	0.0	0.0	0.0	0,0,0
4539	0.09	0.17	0.11	172,172,197	0.0	0.0	0.0	0,0,0
4540	0.11	0.20	0.13	172,172,197	0.0	0.0	0.0	0,0,0
4541	0.11	0.20	0.13	172,172,197	0.0	0.0	0.0	0,0,0
4542	0.11	0.20	0.13	172,172,197	0.0	0.0	0.0	0,0,0
4543	0.10	0.19	0.12	172,172,197	0.0	0.0	0.0	0,0,0
4544	0.09	0.17	0.11	172,172,197	0.0	0.0	0.0	0,0,0
4545	0.16	0.29	0.17	172,176,199	0.0	0.0	0.0	0,0,0
4546	0.11	0.20	0.13	172,172,197	0.0	0.0	0.0	0,0,0
4547	0.08	0.12	0.10	172,172,197	0.0	0.0	0.0	0,0,0
4548	0.14	0.25	0.15	172,172,197	0.0	0.0	0.0	0,0,0
4549	0.09	0.16	0.10	172,172,197	0.0	0.0	0.0	0,0,0
4550	0.10	0.18	0.12	172,172,197	0.0	0.0	0.0	0,0,0
4551	0.10	0.19	0.12	172,172,197	0.0	0.0	0.0	0,0,0
4552	0.10	0.19	0.12	172,172,197	0.0	0.0	0.0	0,0,0
4553	0.10	0.18	0.12	172,172,197	0.0	0.0	0.0	0,0,0
4554	0.09	0.16	0.10	172,172,197	0.0	0.0	0.0	0,0,0
4555	0.07	0.12	0.08	172,172,197	0.0	0.0	0.0	0,0,0
4556	0.12	0.21	0.14	172,172,197	0.0	0.0	0.0	0,0,0
4557	0.37	0.60	0.44	172,172,197	0.11	0.15	0.15	172,193,197
4558	0.30	0.52	0.35	172,172,197	0.10	0.0	0.0	172,0,0
4559	0.12	0.21	0.14	172,172,197	0.0	0.0	0.0	0,0,0
4560	0.08	0.15	0.09	172,172,197	0.0	0.0	0.0	0,0,0
4561	0.09	0.18	0.11	172,172,197	0.0	0.0	0.0	0,0,0
4562	0.10	0.20	0.12	172,172,197	0.0	0.0	0.0	0,0,0
4563	0.10	0.20	0.12	172,172,197	0.0	0.0	0.0	0,0,0
4564	0.10	0.20	0.12	172,172,197	0.0	0.0	0.0	0,0,0
4565	0.10	0.19	0.12	172,172,197	0.0	0.0	0.0	0,0,0
4566	0.09	0.17	0.11	172,172,197	0.0	0.0	0.0	0,0,0
4567	0.07	0.14	0.09	172,172,197	0.0	0.0	0.0	0,0,0
4568	0.13	0.23	0.15	172,172,197	0.0	0.0	0.0	0,0,0
4569	0.35	0.59	0.41	172,172,197	0.11	0.14	0.13	172,193,197
4570	0.34	0.59	0.40	172,172,197	0.11	0.14	0.13	172,193,197
4571	0.13	0.23	0.15	172,172,197	0.0	0.0	0.0	0,0,0
4572	0.07	0.14	0.09	172,172,197	0.0	0.0	0.0	0,0,0
4573	0.09	0.17	0.11	172,172,197	0.0	0.0	0.0	0,0,0
4574	0.10	0.19	0.12	172,172,197	0.0	0.0	0.0	0,0,0
4575	0.10	0.20	0.12	172,172,197	0.0	0.0	0.0	0,0,0

4576	0.10	0.20	0.12	172,172,197	0.0	0.0	0.0	0,0,0
4577	0.10	0.19	0.12	172,172,197	0.0	0.0	0.0	0,0,0
4578	0.09	0.17	0.11	172,172,197	0.0	0.0	0.0	0,0,0
4579	0.07	0.14	0.09	172,172,197	0.0	0.0	0.0	0,0,0
4580	0.13	0.23	0.15	172,172,197	0.0	0.0	0.0	0,0,0
4581	0.34	0.58	0.40	172,172,197	0.11	0.13	0.13	172,193,197
4582	0.35	0.60	0.41	172,172,197	0.11	0.14	0.14	172,193,197
4583	0.13	0.23	0.15	172,172,197	0.0	0.0	0.0	0,0,0
4584	0.07	0.14	0.09	172,172,197	0.0	0.0	0.0	0,0,0
4585	0.09	0.17	0.11	172,172,197	0.0	0.0	0.0	0,0,0
4586	0.10	0.19	0.12	172,172,197	0.0	0.0	0.0	0,0,0
4587	0.10	0.20	0.12	172,172,197	0.0	0.0	0.0	0,0,0
4588	0.10	0.20	0.12	172,172,197	0.0	0.0	0.0	0,0,0
4589	0.10	0.20	0.12	172,172,197	0.0	0.0	0.0	0,0,0
4590	0.09	0.18	0.11	172,172,197	0.0	0.0	0.0	0,0,0
4591	0.08	0.15	0.09	172,172,197	0.0	0.0	0.0	0,0,0
4592	0.12	0.21	0.14	172,172,197	0.0	0.0	0.0	0,0,0
4593	0.30	0.52	0.34	172,172,197	0.10	0.0	0.0	172,0,0
4594	0.37	0.60	0.44	172,172,197	0.11	0.16	0.15	172,193,197
4595	0.12	0.21	0.14	172,172,197	0.0	0.0	0.0	0,0,0
4596	0.07	0.12	0.08	172,172,197	0.0	0.0	0.0	0,0,0
4597	0.09	0.16	0.10	172,172,197	0.0	0.0	0.0	0,0,0
4598	0.10	0.18	0.12	172,172,197	0.0	0.0	0.0	0,0,0
4599	0.10	0.19	0.12	172,172,197	0.0	0.0	0.0	0,0,0
4600	0.10	0.19	0.12	172,172,197	0.0	0.0	0.0	0,0,0
4601	0.10	0.18	0.12	172,172,197	0.0	0.0	0.0	0,0,0
4602	0.09	0.16	0.10	172,172,197	0.0	0.0	0.0	0,0,0
4603	0.14	0.25	0.15	172,172,197	0.0	0.0	0.0	0,0,0
4604	0.08	0.12	0.10	172,172,197	0.0	0.0	0.0	0,0,0
4812	0.08	0.12	0.09	172,172,197	0.0	0.0	0.0	0,0,0
4813	0.08	0.13	0.09	172,172,197	0.0	0.0	0.0	0,0,0
4814	0.09	0.15	0.10	172,172,197	0.0	0.0	0.0	0,0,0
4815	0.09	0.15	0.10	172,172,197	0.0	0.0	0.0	0,0,0
4816	0.09	0.15	0.10	172,172,197	0.0	0.0	0.0	0,0,0
4817	0.09	0.15	0.10	172,172,197	0.0	0.0	0.0	0,0,0
4818	0.08	0.15	0.10	172,172,197	0.0	0.0	0.0	0,0,0
4819	0.08	0.14	0.09	172,172,197	0.0	0.0	0.0	0,0,0
4820	0.07	0.12	0.08	172,172,197	0.0	0.0	0.0	0,0,0
4821	0.10	0.17	0.11	172,172,197	0.0	0.0	0.0	0,0,0
4822	0.15	0.25	0.17	172,172,197	0.0	0.0	0.0	0,0,0
4823	0.14	0.25	0.16	172,172,197	0.0	0.0	0.0	0,0,0
4824	0.10	0.18	0.11	172,172,197	0.0	0.0	0.0	0,0,0
4825	0.08	0.14	0.09	172,172,197	0.0	0.0	0.0	0,0,0
4826	0.08	0.15	0.10	172,172,197	0.0	0.0	0.0	0,0,0
4827	0.09	0.16	0.10	172,172,197	0.0	0.0	0.0	0,0,0
4828	0.09	0.16	0.10	172,172,197	0.0	0.0	0.0	0,0,0
4829	0.09	0.16	0.10	172,172,197	0.0	0.0	0.0	0,0,0
4830	0.09	0.16	0.10	172,172,197	0.0	0.0	0.0	0,0,0
4831	0.08	0.15	0.10	172,172,197	0.0	0.0	0.0	0,0,0
4832	0.07	0.13	0.09	172,172,197	0.0	0.0	0.0	0,0,0
4833	0.10	0.19	0.12	172,172,197	0.0	0.0	0.0	0,0,0
4834	0.15	0.26	0.18	172,172,197	0.0	0.0	0.0	0,0,0
4835	0.15	0.26	0.17	172,172,197	0.0	0.0	0.0	0,0,0
4836	0.10	0.19	0.12	172,172,197	0.0	0.0	0.0	0,0,0
4837	0.07	0.13	0.09	172,172,197	0.0	0.0	0.0	0,0,0
4838	0.08	0.15	0.10	172,172,197	0.0	0.0	0.0	0,0,0
4839	0.08	0.16	0.10	172,172,197	0.0	0.0	0.0	0,0,0
4840	0.08	0.16	0.10	172,172,197	0.0	0.0	0.0	0,0,0
4841	0.08	0.16	0.10	172,172,197	0.0	0.0	0.0	0,0,0
4842	0.08	0.16	0.10	172,172,197	0.0	0.0	0.0	0,0,0
4843	0.08	0.15	0.10	172,172,197	0.0	0.0	0.0	0,0,0
4844	0.07	0.13	0.09	172,172,197	0.0	0.0	0.0	0,0,0
4845	0.10	0.19	0.12	172,172,197	0.0	0.0	0.0	0,0,0
4846	0.15	0.26	0.17	172,172,197	0.0	0.0	0.0	0,0,0
4847	0.15	0.26	0.18	172,172,197	0.0	0.0	0.0	0,0,0
4848	0.10	0.19	0.12	172,172,197	0.0	0.0	0.0	0,0,0
4849	0.07	0.13	0.09	172,172,197	0.0	0.0	0.0	0,0,0
4850	0.08	0.15	0.10	172,172,197	0.0	0.0	0.0	0,0,0
4851	0.09	0.16	0.10	172,172,197	0.0	0.0	0.0	0,0,0
4852	0.09	0.16	0.10	172,172,197	0.0	0.0	0.0	0,0,0
4853	0.09	0.16	0.10	172,172,197	0.0	0.0	0.0	0,0,0
4854	0.09	0.16	0.10	172,172,197	0.0	0.0	0.0	0,0,0
4855	0.08	0.15	0.10	172,172,197	0.0	0.0	0.0	0,0,0
4856	0.08	0.14	0.09	172,172,197	0.0	0.0	0.0	0,0,0
4857	0.10	0.18	0.11	172,172,197	0.0	0.0	0.0	0,0,0
4858	0.14	0.25	0.16	172,172,197	0.0	0.0	0.0	0,0,0
4859	0.15	0.25	0.17	172,172,197	0.0	0.0	0.0	0,0,0
4860	0.10	0.17	0.11	172,172,197	0.0	0.0	0.0	0,0,0
4861	0.07	0.12	0.08	172,172,197	0.0	0.0	0.0	0,0,0

4862	0.08	0.14	0.09	172,172,197	0.0	0.0	0.0	0,0,0
4863	0.08	0.15	0.10	172,172,197	0.0	0.0	0.0	0,0,0
4864	0.09	0.15	0.10	172,172,197	0.0	0.0	0.0	0,0,0
4865	0.09	0.15	0.10	172,172,197	0.0	0.0	0.0	0,0,0
4866	0.09	0.15	0.10	172,172,197	0.0	0.0	0.0	0,0,0
4867	0.09	0.15	0.10	172,172,197	0.0	0.0	0.0	0,0,0
4868	0.08	0.13	0.09	172,172,197	0.0	0.0	0.0	0,0,0
4869	0.08	0.12	0.09	172,172,197	0.0	0.0	0.0	0,0,0
4870	0.07	0.11	0.09	172,172,197	0.0	0.0	0.0	0,0,0
4871	0.07	0.12	0.09	172,172,197	0.0	0.0	0.0	0,0,0
4872	0.08	0.13	0.09	172,172,197	0.0	0.0	0.0	0,0,0
4873	0.08	0.13	0.09	172,172,197	0.0	0.0	0.0	0,0,0
4874	0.08	0.13	0.09	172,172,197	0.0	0.0	0.0	0,0,0
4875	0.07	0.12	0.08	172,172,197	0.0	0.0	0.0	0,0,0
4876	0.07	0.11	0.08	172,172,197	0.0	0.0	0.0	0,0,0
4877	0.07	0.11	0.08	172,172,197	0.0	0.0	0.0	0,0,0
4878	0.06	0.11	0.08	172,172,197	0.0	0.0	0.0	0,0,0
4879	0.06	0.10	0.07	172,176,197	0.0	0.0	0.0	0,0,0
4880	0.08	0.14	0.09	176,176,199	0.0	0.0	0.0	0,0,0
4881	0.07	0.14	0.09	176,176,199	0.0	0.0	0.0	0,0,0
4882	0.06	0.11	0.07	172,172,197	0.0	0.0	0.0	0,0,0
4883	0.07	0.12	0.08	172,172,197	0.0	0.0	0.0	0,0,0
4884	0.07	0.13	0.09	172,172,197	0.0	0.0	0.0	0,0,0
4885	0.07	0.13	0.09	172,172,197	0.0	0.0	0.0	0,0,0
4886	0.07	0.12	0.08	172,172,197	0.0	0.0	0.0	0,0,0
4887	0.07	0.12	0.08	172,172,197	0.0	0.0	0.0	0,0,0
4888	0.07	0.13	0.08	172,172,197	0.0	0.0	0.0	0,0,0
4889	0.07	0.13	0.08	172,172,197	0.0	0.0	0.0	0,0,0
4890	0.07	0.12	0.08	172,172,197	0.0	0.0	0.0	0,0,0
4891	0.06	0.12	0.07	172,172,197	0.0	0.0	0.0	0,0,0
4892	0.08	0.15	0.09	172,172,197	0.0	0.0	0.0	0,0,0
4893	0.08	0.15	0.09	172,172,197	0.0	0.0	0.0	0,0,0
4894	0.06	0.12	0.07	172,172,197	0.0	0.0	0.0	0,0,0
4895	0.07	0.12	0.08	172,172,197	0.0	0.0	0.0	0,0,0
4896	0.07	0.13	0.08	172,172,197	0.0	0.0	0.0	0,0,0
4897	0.07	0.13	0.08	172,172,197	0.0	0.0	0.0	0,0,0
4898	0.07	0.12	0.08	172,172,197	0.0	0.0	0.0	0,0,0
4899	0.07	0.12	0.08	172,172,197	0.0	0.0	0.0	0,0,0
4900	0.07	0.13	0.08	172,172,197	0.0	0.0	0.0	0,0,0
4901	0.07	0.13	0.08	172,172,197	0.0	0.0	0.0	0,0,0
4902	0.07	0.12	0.08	172,172,197	0.0	0.0	0.0	0,0,0
4903	0.06	0.11	0.07	172,172,197	0.0	0.0	0.0	0,0,0
4904	0.08	0.15	0.09	172,172,197	0.0	0.0	0.0	0,0,0
4905	0.08	0.15	0.09	172,172,197	0.0	0.0	0.0	0,0,0
4906	0.06	0.12	0.07	172,172,197	0.0	0.0	0.0	0,0,0
4907	0.07	0.12	0.08	172,172,197	0.0	0.0	0.0	0,0,0
4908	0.07	0.13	0.08	172,172,197	0.0	0.0	0.0	0,0,0
4909	0.07	0.13	0.08	172,172,197	0.0	0.0	0.0	0,0,0
4910	0.07	0.12	0.08	172,172,197	0.0	0.0	0.0	0,0,0
4911	0.07	0.12	0.08	172,172,197	0.0	0.0	0.0	0,0,0
4912	0.07	0.13	0.08	172,172,197	0.0	0.0	0.0	0,0,0
4913	0.07	0.13	0.09	172,172,197	0.0	0.0	0.0	0,0,0
4914	0.07	0.12	0.08	172,172,197	0.0	0.0	0.0	0,0,0
4915	0.06	0.11	0.07	172,172,197	0.0	0.0	0.0	0,0,0
4916	0.07	0.14	0.09	176,176,199	0.0	0.0	0.0	0,0,0
4917	0.08	0.14	0.09	176,176,199	0.0	0.0	0.0	0,0,0
4918	0.06	0.10	0.07	172,176,197	0.0	0.0	0.0	0,0,0
4919	0.06	0.11	0.08	172,172,197	0.0	0.0	0.0	0,0,0
4920	0.07	0.11	0.08	172,172,197	0.0	0.0	0.0	0,0,0
4921	0.07	0.11	0.08	172,172,197	0.0	0.0	0.0	0,0,0
4922	0.07	0.12	0.08	172,172,197	0.0	0.0	0.0	0,0,0
4923	0.08	0.13	0.09	172,172,197	0.0	0.0	0.0	0,0,0
4924	0.08	0.13	0.09	172,172,197	0.0	0.0	0.0	0,0,0
4925	0.08	0.13	0.09	172,172,197	0.0	0.0	0.0	0,0,0
4926	0.07	0.12	0.09	172,172,197	0.0	0.0	0.0	0,0,0
4927	0.07	0.11	0.09	172,172,197	0.0	0.0	0.0	0,0,0
4928	0.07	0.12	0.08	176,176,199	0.0	0.0	0.0	0,0,0
4929	0.07	0.10	0.08	176,176,199	0.0	0.0	0.0	0,0,0
4930	0.06	0.10	0.07	172,172,197	0.0	0.0	0.0	0,0,0
4931	0.06	0.10	0.07	172,172,197	0.0	0.0	0.0	0,0,0
4932	0.06	0.09	0.07	172,172,197	0.0	0.0	0.0	0,0,0
4933	0.05	0.08	0.05	172,172,197	0.0	0.0	0.0	0,0,0
4934	0.05	0.08	0.06	172,172,197	0.0	0.0	0.0	0,0,0
4935	0.05	0.08	0.06	172,172,197	0.0	0.0	0.0	0,0,0
4936	0.05	0.08	0.06	172,172,197	0.0	0.0	0.0	0,0,0
4937	0.04	0.06	0.05	172,172,197	0.0	0.0	0.0	0,0,0
4938	0.09	0.16	0.11	176,176,199	0.0	0.0	0.0	0,0,0
4939	0.09	0.16	0.11	176,176,199	0.0	0.0	0.0	0,0,0
4940	0.04	0.07	0.05	176,172,197	0.0	0.0	0.0	0,0,0

4941	0.05	0.09	0.06	172,172,197	0.0	0.0	0.0	0,0,0
4942	0.05	0.09	0.06	172,172,197	0.0	0.0	0.0	0,0,0
4943	0.05	0.09	0.06	172,172,197	0.0	0.0	0.0	0,0,0
4944	0.04	0.08	0.05	172,172,197	0.0	0.0	0.0	0,0,0
4945	0.04	0.08	0.05	172,172,197	0.0	0.0	0.0	0,0,0
4946	0.05	0.09	0.06	172,172,197	0.0	0.0	0.0	0,0,0
4947	0.05	0.09	0.06	172,172,197	0.0	0.0	0.0	0,0,0
4948	0.05	0.09	0.06	172,172,197	0.0	0.0	0.0	0,0,0
4949	0.04	0.07	0.05	176,172,197	0.0	0.0	0.0	0,0,0
4950	0.09	0.16	0.11	176,176,199	0.0	0.0	0.0	0,0,0
4951	0.09	0.16	0.11	176,176,199	0.0	0.0	0.0	0,0,0
4952	0.04	0.07	0.05	176,172,197	0.0	0.0	0.0	0,0,0
4953	0.05	0.09	0.06	172,172,197	0.0	0.0	0.0	0,0,0
4954	0.05	0.09	0.06	172,172,197	0.0	0.0	0.0	0,0,0
4955	0.05	0.09	0.06	172,172,197	0.0	0.0	0.0	0,0,0
4956	0.04	0.08	0.05	172,172,197	0.0	0.0	0.0	0,0,0
4957	0.04	0.08	0.05	172,172,197	0.0	0.0	0.0	0,0,0
4958	0.05	0.09	0.06	172,172,197	0.0	0.0	0.0	0,0,0
4959	0.05	0.09	0.06	172,172,197	0.0	0.0	0.0	0,0,0
4960	0.05	0.09	0.06	172,172,197	0.0	0.0	0.0	0,0,0
4961	0.04	0.07	0.05	172,172,197	0.0	0.0	0.0	0,0,0
4962	0.09	0.16	0.11	176,176,199	0.0	0.0	0.0	0,0,0
4963	0.09	0.16	0.11	176,176,199	0.0	0.0	0.0	0,0,0
4964	0.04	0.07	0.05	176,172,197	0.0	0.0	0.0	0,0,0
4965	0.05	0.09	0.06	172,172,197	0.0	0.0	0.0	0,0,0
4966	0.05	0.09	0.06	172,172,197	0.0	0.0	0.0	0,0,0
4967	0.05	0.09	0.06	172,172,197	0.0	0.0	0.0	0,0,0
4968	0.04	0.08	0.05	172,172,197	0.0	0.0	0.0	0,0,0
4969	0.04	0.08	0.05	172,172,197	0.0	0.0	0.0	0,0,0
4970	0.05	0.09	0.06	172,172,197	0.0	0.0	0.0	0,0,0
4971	0.05	0.09	0.06	172,172,197	0.0	0.0	0.0	0,0,0
4972	0.05	0.09	0.06	172,172,197	0.0	0.0	0.0	0,0,0
4973	0.04	0.07	0.05	176,172,199	0.0	0.0	0.0	0,0,0
4974	0.09	0.16	0.11	176,176,199	0.0	0.0	0.0	0,0,0
4975	0.09	0.16	0.11	176,176,199	0.0	0.0	0.0	0,0,0
4976	0.04	0.06	0.05	172,172,197	0.0	0.0	0.0	0,0,0
4977	0.05	0.08	0.06	172,172,197	0.0	0.0	0.0	0,0,0
4978	0.05	0.08	0.06	172,172,197	0.0	0.0	0.0	0,0,0
4979	0.05	0.08	0.06	172,172,197	0.0	0.0	0.0	0,0,0
4980	0.05	0.08	0.05	172,172,197	0.0	0.0	0.0	0,0,0
4981	0.06	0.09	0.07	172,172,197	0.0	0.0	0.0	0,0,0
4982	0.06	0.10	0.07	172,172,197	0.0	0.0	0.0	0,0,0
4983	0.06	0.10	0.07	172,172,197	0.0	0.0	0.0	0,0,0
4984	0.07	0.10	0.08	176,176,199	0.0	0.0	0.0	0,0,0
4985	0.07	0.12	0.08	176,176,199	0.0	0.0	0.0	0,0,0
4992	0.09	0.15	0.10	176,176,199	0.0	0.0	0.0	0,0,0
4993	0.09	0.12	0.11	176,176,199	0.0	0.0	0.0	0,0,0
4994	0.04	0.07	0.05	172,176,197	0.0	0.0	0.0	0,0,0
4995	0.03	0.06	0.04	176,176,197	0.0	0.0	0.0	0,0,0
4996	0.03	0.05	0.03	172,176,197	0.0	0.0	0.0	0,0,0
4997	0.03	0.05	0.03	176,176,199	0.0	0.0	0.0	0,0,0
4998	0.03	0.05	0.03	176,176,199	0.0	0.0	0.0	0,0,0
4999	0.03	0.05	0.03	176,176,199	0.0	0.0	0.0	0,0,0
5000	0.03	0.05	0.03	176,176,199	0.0	0.0	0.0	0,0,0
5001	0.04	0.06	0.04	176,176,199	0.0	0.0	0.0	0,0,0
5002	0.10	0.19	0.12	176,176,199	0.0	0.0	0.0	0,0,0
5003	0.10	0.19	0.12	176,176,199	0.0	0.0	0.0	0,0,0
5004	0.04	0.07	0.05	176,176,199	0.0	0.0	0.0	0,0,0
5005	0.04	0.07	0.05	176,176,199	0.0	0.0	0.0	0,0,0
5006	0.04	0.07	0.05	176,176,199	0.0	0.0	0.0	0,0,0
5007	0.04	0.07	0.05	176,176,199	0.0	0.0	0.0	0,0,0
5008	0.04	0.07	0.05	176,176,199	0.0	0.0	0.0	0,0,0
5009	0.04	0.07	0.05	176,176,199	0.0	0.0	0.0	0,0,0
5010	0.04	0.07	0.05	176,176,199	0.0	0.0	0.0	0,0,0
5011	0.04	0.07	0.05	176,176,199	0.0	0.0	0.0	0,0,0
5012	0.04	0.07	0.04	176,176,199	0.0	0.0	0.0	0,0,0
5013	0.04	0.07	0.05	176,176,199	0.0	0.0	0.0	0,0,0
5014	0.10	0.19	0.11	176,176,199	0.0	0.0	0.0	0,0,0
5015	0.10	0.19	0.11	176,176,199	0.0	0.0	0.0	0,0,0
5016	0.04	0.07	0.05	176,176,199	0.0	0.0	0.0	0,0,0
5017	0.04	0.06	0.04	176,176,199	0.0	0.0	0.0	0,0,0
5018	0.04	0.07	0.05	176,176,199	0.0	0.0	0.0	0,0,0
5019	0.04	0.07	0.05	176,176,199	0.0	0.0	0.0	0,0,0
5020	0.04	0.07	0.05	176,176,199	0.0	0.0	0.0	0,0,0
5021	0.04	0.07	0.05	176,176,199	0.0	0.0	0.0	0,0,0
5022	0.04	0.07	0.05	176,176,199	0.0	0.0	0.0	0,0,0
5023	0.04	0.07	0.05	176,176,199	0.0	0.0	0.0	0,0,0
5024	0.04	0.06	0.04	176,176,199	0.0	0.0	0.0	0,0,0
5025	0.04	0.07	0.05	176,176,199	0.0	0.0	0.0	0,0,0

5026	0.10	0.19	0.11	176,176,199	0.0	0.0	0.0	0,0,0
5027	0.10	0.19	0.11	176,176,199	0.0	0.0	0.0	0,0,0
5028	0.04	0.07	0.05	176,176,199	0.0	0.0	0.0	0,0,0
5029	0.04	0.07	0.04	176,176,199	0.0	0.0	0.0	0,0,0
5030	0.04	0.07	0.05	176,176,199	0.0	0.0	0.0	0,0,0
5031	0.04	0.07	0.05	176,176,199	0.0	0.0	0.0	0,0,0
5032	0.04	0.07	0.05	176,176,199	0.0	0.0	0.0	0,0,0
5033	0.04	0.07	0.05	176,176,199	0.0	0.0	0.0	0,0,0
5034	0.04	0.07	0.05	176,176,199	0.0	0.0	0.0	0,0,0
5035	0.04	0.07	0.05	176,176,199	0.0	0.0	0.0	0,0,0
5036	0.04	0.07	0.05	176,176,199	0.0	0.0	0.0	0,0,0
5037	0.04	0.07	0.05	176,176,199	0.0	0.0	0.0	0,0,0
5038	0.10	0.19	0.12	176,176,199	0.0	0.0	0.0	0,0,0
5039	0.10	0.19	0.12	176,176,199	0.0	0.0	0.0	0,0,0
5040	0.04	0.06	0.04	176,176,199	0.0	0.0	0.0	0,0,0
5041	0.03	0.05	0.03	176,176,199	0.0	0.0	0.0	0,0,0
5042	0.03	0.05	0.04	176,176,199	0.0	0.0	0.0	0,0,0
5043	0.03	0.05	0.04	176,176,199	0.0	0.0	0.0	0,0,0
5044	0.03	0.05	0.03	176,176,199	0.0	0.0	0.0	0,0,0
5045	0.03	0.05	0.03	172,176,197	0.0	0.0	0.0	0,0,0
5046	0.03	0.06	0.04	176,176,197	0.0	0.0	0.0	0,0,0
5047	0.04	0.07	0.05	172,176,197	0.0	0.0	0.0	0,0,0
5048	0.09	0.12	0.11	176,176,199	0.0	0.0	0.0	0,0,0
5049	0.09	0.15	0.10	176,176,199	0.0	0.0	0.0	0,0,0
5050	0.06	0.12	0.07	176,176,199	0.0	0.0	0.0	0,0,0
5051	0.07	0.12	0.08	176,176,199	0.0	0.0	0.0	0,0,0
5052	0.11	0.18	0.13	176,176,199	0.0	0.0	0.0	0,0,0
5053	0.10	0.16	0.12	176,176,199	0.0	0.0	0.0	0,0,0
5054	0.14	0.22	0.16	176,176,199	0.0	0.0	0.0	0,0,0
5055	0.13	0.21	0.16	176,176,199	0.0	0.0	0.0	0,0,0
5056	0.12	0.19	0.14	176,176,199	0.0	0.0	0.0	0,0,0
5057	0.13	0.20	0.15	176,176,199	0.0	0.0	0.0	0,0,0
5058	0.08	0.13	0.09	176,176,199	0.0	0.0	0.0	0,0,0
5059	0.08	0.14	0.10	176,176,199	0.0	0.0	0.0	0,0,0
5060	0.09	0.15	0.10	176,176,199	0.0	0.0	0.0	0,0,0
5061	0.09	0.15	0.10	176,176,199	0.0	0.0	0.0	0,0,0
5062	0.09	0.16	0.11	176,176,199	0.0	0.0	0.0	0,0,0
5063	0.09	0.15	0.10	176,176,199	0.0	0.0	0.0	0,0,0
5064	0.14	0.23	0.17	176,176,199	0.0	0.0	0.0	0,0,0
5065	0.14	0.22	0.16	176,176,199	0.0	0.0	0.0	0,0,0
5066	0.16	0.26	0.19	176,176,199	0.0	0.0	0.0	0,0,0
5067	0.16	0.26	0.19	176,176,199	0.0	0.0	0.0	0,0,0
5068	0.14	0.22	0.16	176,176,199	0.0	0.0	0.0	0,0,0
5069	0.14	0.23	0.16	176,176,199	0.0	0.0	0.0	0,0,0
5070	0.08	0.14	0.10	176,176,199	0.0	0.0	0.0	0,0,0
5071	0.09	0.15	0.10	176,176,199	0.0	0.0	0.0	0,0,0
5072	0.09	0.14	0.10	176,176,199	0.0	0.0	0.0	0,0,0
5073	0.09	0.14	0.10	176,176,199	0.0	0.0	0.0	0,0,0
5074	0.09	0.15	0.10	176,176,199	0.0	0.0	0.0	0,0,0
5075	0.08	0.14	0.10	176,176,199	0.0	0.0	0.0	0,0,0
5076	0.14	0.23	0.16	176,176,199	0.0	0.0	0.0	0,0,0
5077	0.13	0.22	0.16	176,176,199	0.0	0.0	0.0	0,0,0
5078	0.16	0.25	0.18	176,176,199	0.0	0.0	0.0	0,0,0
5079	0.16	0.25	0.18	176,176,199	0.0	0.0	0.0	0,0,0
5080	0.13	0.22	0.16	176,176,199	0.0	0.0	0.0	0,0,0
5081	0.14	0.23	0.16	176,176,199	0.0	0.0	0.0	0,0,0
5082	0.08	0.14	0.10	176,176,199	0.0	0.0	0.0	0,0,0
5083	0.09	0.15	0.10	176,176,199	0.0	0.0	0.0	0,0,0
5084	0.09	0.14	0.10	176,176,199	0.0	0.0	0.0	0,0,0
5085	0.09	0.14	0.10	176,176,199	0.0	0.0	0.0	0,0,0
5086	0.09	0.15	0.10	176,176,199	0.0	0.0	0.0	0,0,0
5087	0.08	0.14	0.10	176,176,199	0.0	0.0	0.0	0,0,0
5088	0.14	0.23	0.16	176,176,199	0.0	0.0	0.0	0,0,0
5089	0.14	0.22	0.16	176,176,199	0.0	0.0	0.0	0,0,0
5090	0.16	0.26	0.19	176,176,199	0.0	0.0	0.0	0,0,0
5091	0.16	0.26	0.19	176,176,199	0.0	0.0	0.0	0,0,0
5092	0.14	0.22	0.16	176,176,199	0.0	0.0	0.0	0,0,0
5093	0.14	0.23	0.17	176,176,199	0.0	0.0	0.0	0,0,0
5094	0.09	0.15	0.10	176,176,199	0.0	0.0	0.0	0,0,0
5095	0.09	0.16	0.11	176,176,199	0.0	0.0	0.0	0,0,0
5096	0.09	0.15	0.11	176,176,199	0.0	0.0	0.0	0,0,0
5097	0.09	0.15	0.10	176,176,199	0.0	0.0	0.0	0,0,0
5098	0.08	0.14	0.10	176,176,199	0.0	0.0	0.0	0,0,0
5099	0.08	0.13	0.09	176,176,199	0.0	0.0	0.0	0,0,0
5100	0.13	0.20	0.15	176,176,199	0.0	0.0	0.0	0,0,0
5101	0.12	0.19	0.14	176,176,199	0.0	0.0	0.0	0,0,0
5102	0.14	0.21	0.16	176,176,199	0.0	0.0	0.0	0,0,0
5103	0.14	0.22	0.16	176,176,199	0.0	0.0	0.0	0,0,0
5104	0.10	0.16	0.12	176,176,199	0.0	0.0	0.0	0,0,0

5105	0.11	0.18	0.13	176,176,199	0.0	0.0	0.0	0,0,0
5106	0.07	0.12	0.08	176,176,199	0.0	0.0	0.0	0,0,0
5107	0.06	0.12	0.07	176,176,199	0.0	0.0	0.0	0,0,0
5166	0.03	0.06	0.04	176,176,199	0.0	0.0	0.0	0,0,0
5167	0.04	0.08	0.05	176,176,199	0.0	0.0	0.0	0,0,0
5168	0.10	0.18	0.12	176,176,199	0.0	0.0	0.0	0,0,0
5169	0.11	0.19	0.13	176,176,199	0.0	0.0	0.0	0,0,0
5170	0.14	0.23	0.16	176,176,199	0.0	0.0	0.0	0,0,0
5171	0.14	0.24	0.16	176,176,199	0.0	0.0	0.0	0,0,0
5172	0.13	0.21	0.15	176,176,199	0.0	0.0	0.0	0,0,0
5173	0.13	0.22	0.15	176,176,199	0.0	0.0	0.0	0,0,0
5174	0.08	0.14	0.09	176,176,199	0.0	0.0	0.0	0,0,0
5175	0.08	0.14	0.09	176,176,199	0.0	0.0	0.0	0,0,0
5176	0.04	0.06	0.04	176,176,199	0.0	0.0	0.0	0,0,0
5177	0.04	0.07	0.05	176,176,199	0.0	0.0	0.0	0,0,0
5178	0.09	0.15	0.10	176,176,199	0.0	0.0	0.0	0,0,0
5179	0.09	0.16	0.11	176,176,199	0.0	0.0	0.0	0,0,0
5180	0.14	0.24	0.16	176,176,199	0.0	0.0	0.0	0,0,0
5181	0.15	0.25	0.17	176,176,199	0.0	0.0	0.0	0,0,0
5182	0.16	0.28	0.19	176,176,199	0.0	0.0	0.0	0,0,0
5183	0.16	0.28	0.19	176,176,199	0.0	0.0	0.0	0,0,0
5184	0.14	0.24	0.16	176,176,199	0.0	0.0	0.0	0,0,0
5185	0.14	0.24	0.16	176,176,199	0.0	0.0	0.0	0,0,0
5186	0.09	0.15	0.10	176,176,199	0.0	0.0	0.0	0,0,0
5187	0.08	0.15	0.10	176,176,199	0.0	0.0	0.0	0,0,0
5188	0.04	0.07	0.05	176,176,199	0.0	0.0	0.0	0,0,0
5189	0.04	0.07	0.05	176,176,199	0.0	0.0	0.0	0,0,0
5190	0.08	0.15	0.09	176,176,199	0.0	0.0	0.0	0,0,0
5191	0.09	0.15	0.10	176,176,199	0.0	0.0	0.0	0,0,0
5192	0.14	0.23	0.16	176,176,199	0.0	0.0	0.0	0,0,0
5193	0.14	0.24	0.16	176,176,199	0.0	0.0	0.0	0,0,0
5194	0.16	0.27	0.19	176,176,199	0.0	0.0	0.0	0,0,0
5195	0.16	0.27	0.19	176,176,199	0.0	0.0	0.0	0,0,0
5196	0.14	0.24	0.16	176,176,199	0.0	0.0	0.0	0,0,0
5197	0.14	0.23	0.16	176,176,199	0.0	0.0	0.0	0,0,0
5198	0.09	0.15	0.10	176,176,199	0.0	0.0	0.0	0,0,0
5199	0.08	0.14	0.09	176,176,199	0.0	0.0	0.0	0,0,0
5200	0.04	0.07	0.05	176,176,199	0.0	0.0	0.0	0,0,0
5201	0.04	0.07	0.05	176,176,199	0.0	0.0	0.0	0,0,0
5202	0.08	0.15	0.10	176,176,199	0.0	0.0	0.0	0,0,0
5203	0.09	0.15	0.10	176,176,199	0.0	0.0	0.0	0,0,0
5204	0.14	0.24	0.16	176,176,199	0.0	0.0	0.0	0,0,0
5205	0.14	0.24	0.17	176,176,199	0.0	0.0	0.0	0,0,0
5206	0.16	0.28	0.19	176,176,199	0.0	0.0	0.0	0,0,0
5207	0.16	0.28	0.19	176,176,199	0.0	0.0	0.0	0,0,0
5208	0.15	0.25	0.17	176,176,199	0.0	0.0	0.0	0,0,0
5209	0.14	0.24	0.16	176,176,199	0.0	0.0	0.0	0,0,0
5210	0.09	0.16	0.11	176,176,199	0.0	0.0	0.0	0,0,0
5211	0.09	0.15	0.10	176,176,199	0.0	0.0	0.0	0,0,0
5212	0.04	0.07	0.05	176,176,199	0.0	0.0	0.0	0,0,0
5213	0.04	0.06	0.04	176,176,199	0.0	0.0	0.0	0,0,0
5214	0.08	0.14	0.09	176,176,199	0.0	0.0	0.0	0,0,0
5215	0.08	0.14	0.09	176,176,199	0.0	0.0	0.0	0,0,0
5216	0.13	0.22	0.15	176,176,199	0.0	0.0	0.0	0,0,0
5217	0.13	0.21	0.15	176,176,199	0.0	0.0	0.0	0,0,0
5218	0.14	0.24	0.16	176,176,199	0.0	0.0	0.0	0,0,0
5219	0.14	0.23	0.16	176,176,199	0.0	0.0	0.0	0,0,0
5220	0.11	0.19	0.13	176,176,199	0.0	0.0	0.0	0,0,0
5221	0.10	0.18	0.12	176,176,199	0.0	0.0	0.0	0,0,0
5222	0.04	0.08	0.05	176,176,199	0.0	0.0	0.0	0,0,0
5223	0.03	0.06	0.04	176,176,199	0.0	0.0	0.0	0,0,0
5338	9.89e-03	0.02	0.01	176,176,199	0.0	0.0	0.0	0,0,0
5339	9.74e-03	0.03	0.01	172,172,197	0.0	0.0	0.0	0,0,0
5340	8.80e-03	0.03	0.01	176,176,199	0.0	0.0	0.0	0,0,0
5341	0.02	0.04	0.02	176,176,199	0.0	0.0	0.0	0,0,0
5342	0.02	0.04	0.02	176,176,199	0.0	0.0	0.0	0,0,0
5343	0.02	0.04	0.02	176,176,199	0.0	0.0	0.0	0,0,0
5344	0.02	0.04	0.02	176,176,199	0.0	0.0	0.0	0,0,0
5345	0.01	0.03	0.02	176,176,199	0.0	0.0	0.0	0,0,0
5346	0.01	0.03	0.02	176,176,199	0.0	0.0	0.0	0,0,0
5347	9.12e-03	0.02	0.01	176,176,199	0.0	0.0	0.0	0,0,0
5348	6.47e-03	0.01	7.55e-03	176,176,199	0.0	0.0	0.0	0,0,0
5349	5.34e-03	0.02	6.12e-03	176,176,199	0.0	0.0	0.0	0,0,0
5350	8.67e-03	0.02	9.99e-03	176,176,199	0.0	0.0	0.0	0,0,0
5351	0.02	0.04	0.02	176,176,199	0.0	0.0	0.0	0,0,0
5352	0.02	0.03	0.02	176,176,199	0.0	0.0	0.0	0,0,0
5353	0.02	0.05	0.03	176,176,199	0.0	0.0	0.0	0,0,0
5354	0.02	0.05	0.03	176,176,199	0.0	0.0	0.0	0,0,0
5355	0.02	0.05	0.03	176,176,199	0.0	0.0	0.0	0,0,0

5356	0.02	0.05	0.03	176,176,199	0.0	0.0	0.0	0,0,0
5357	0.02	0.03	0.02	176,176,199	0.0	0.0	0.0	0,0,0
5358	0.02	0.03	0.02	176,176,199	0.0	0.0	0.0	0,0,0
5359	9.16e-03	0.02	0.01	176,176,199	0.0	0.0	0.0	0,0,0
5360	6.06e-03	0.01	7.28e-03	176,176,199	0.0	0.0	0.0	0,0,0
5361	5.76e-03	0.01	7.18e-03	176,176,199	0.0	0.0	0.0	0,0,0
5362	8.75e-03	0.02	0.01	176,176,199	0.0	0.0	0.0	0,0,0
5363	0.02	0.03	0.02	176,176,199	0.0	0.0	0.0	0,0,0
5364	0.02	0.03	0.02	176,176,199	0.0	0.0	0.0	0,0,0
5365	0.02	0.05	0.03	176,176,199	0.0	0.0	0.0	0,0,0
5366	0.02	0.05	0.03	176,176,199	0.0	0.0	0.0	0,0,0
5367	0.02	0.04	0.03	176,176,199	0.0	0.0	0.0	0,0,0
5368	0.02	0.05	0.03	176,176,199	0.0	0.0	0.0	0,0,0
5369	0.01	0.03	0.02	176,176,199	0.0	0.0	0.0	0,0,0
5370	0.02	0.03	0.02	176,176,199	0.0	0.0	0.0	0,0,0
5371	8.34e-03	0.02	9.58e-03	176,176,199	0.0	0.0	0.0	0,0,0
5372	5.69e-03	0.01	7.08e-03	176,176,199	0.0	0.0	0.0	0,0,0
5373	6.03e-03	0.01	7.05e-03	176,176,199	0.0	0.0	0.0	0,0,0
5374	9.03e-03	0.02	0.01	176,176,199	0.0	0.0	0.0	0,0,0
5375	0.02	0.03	0.02	176,176,199	0.0	0.0	0.0	0,0,0
5376	0.02	0.03	0.02	176,176,199	0.0	0.0	0.0	0,0,0
5377	0.02	0.05	0.03	176,176,199	0.0	0.0	0.0	0,0,0
5378	0.02	0.05	0.03	176,176,199	0.0	0.0	0.0	0,0,0
5379	0.02	0.05	0.03	176,176,199	0.0	0.0	0.0	0,0,0
5380	0.02	0.05	0.03	176,176,199	0.0	0.0	0.0	0,0,0
5381	0.02	0.03	0.02	176,176,199	0.0	0.0	0.0	0,0,0
5382	0.02	0.04	0.02	176,176,199	0.0	0.0	0.0	0,0,0
5383	8.73e-03	0.02	0.01	176,176,199	0.0	0.0	0.0	0,0,0
5384	5.60e-03	0.01	6.48e-03	176,176,199	0.0	0.0	0.0	0,0,0
5385	6.48e-03	0.01	7.56e-03	176,176,199	0.0	0.0	0.0	0,0,0
5386	8.92e-03	0.02	0.01	176,176,199	0.0	0.0	0.0	0,0,0
5387	0.02	0.03	0.02	176,176,199	0.0	0.0	0.0	0,0,0
5388	0.01	0.03	0.02	176,176,199	0.0	0.0	0.0	0,0,0
5389	0.02	0.04	0.02	176,176,199	0.0	0.0	0.0	0,0,0
5390	0.02	0.04	0.02	176,176,199	0.0	0.0	0.0	0,0,0
5391	0.02	0.04	0.02	176,176,199	0.0	0.0	0.0	0,0,0
5392	0.02	0.04	0.02	176,176,199	0.0	0.0	0.0	0,0,0
5393	8.84e-03	0.03	0.01	176,176,199	0.0	0.0	0.0	0,0,0
5394	9.63e-03	0.03	0.01	172,172,197	0.0	0.0	0.0	0,0,0
5395	9.75e-03	0.02	0.01	176,176,199	0.0	0.0	0.0	0,0,0
5396	5.57e-03	9.22e-03	6.55e-03	176,176,199	0.0	0.0	0.0	0,0,0
5397	9.56e-03	0.02	0.01	172,172,197	0.0	0.0	0.0	0,0,0
5398	5.80e-03	0.01	6.78e-03	172,176,197	0.0	0.0	0.0	0,0,0
5399	5.04e-03	0.01	5.98e-03	176,172,199	0.0	0.0	0.0	0,0,0
5400	5.21e-03	0.01	6.14e-03	176,176,199	0.0	0.0	0.0	0,0,0
5401	4.81e-03	0.01	5.77e-03	176,176,199	0.0	0.0	0.0	0,0,0
5402	4.91e-03	0.01	5.76e-03	176,176,199	0.0	0.0	0.0	0,0,0
5403	4.91e-03	9.00e-03	6.04e-03	176,176,199	0.0	0.0	0.0	0,0,0
5404	4.80e-03	8.52e-03	5.89e-03	176,176,199	0.0	0.0	0.0	0,0,0
5405	5.57e-03	9.49e-03	6.88e-03	176,176,199	0.0	0.0	0.0	0,0,0
5406	5.45e-03	8.94e-03	6.73e-03	176,176,199	0.0	0.0	0.0	0,0,0
5407	5.77e-03	9.30e-03	7.17e-03	176,176,199	0.0	0.0	0.0	0,0,0
5408	5.77e-03	9.74e-03	7.17e-03	176,176,199	0.0	0.0	0.0	0,0,0
5409	5.84e-03	9.47e-03	7.30e-03	176,176,199	0.0	0.0	0.0	0,0,0
5410	5.85e-03	9.88e-03	7.30e-03	176,176,199	0.0	0.0	0.0	0,0,0
5411	6.17e-03	0.01	7.71e-03	176,176,199	0.0	0.0	0.0	0,0,0
5412	6.16e-03	0.01	7.69e-03	176,176,199	0.0	0.0	0.0	0,0,0
5413	6.36e-03	0.01	7.95e-03	176,176,199	0.0	0.0	0.0	0,0,0
5414	6.31e-03	0.01	7.90e-03	176,176,199	0.0	0.0	0.0	0,0,0
5415	6.41e-03	9.48e-03	8.03e-03	176,176,199	0.0	0.0	0.0	0,0,0
5416	6.34e-03	9.02e-03	7.95e-03	176,176,199	0.0	0.0	0.0	0,0,0
5417	6.76e-03	9.41e-03	8.45e-03	176,176,199	0.0	0.0	0.0	0,0,0
5418	6.70e-03	8.98e-03	8.38e-03	176,176,199	0.0	0.0	0.0	0,0,0
5419	6.76e-03	8.96e-03	8.45e-03	176,176,199	0.0	0.0	0.0	0,0,0
5420	6.78e-03	9.42e-03	8.48e-03	176,176,199	0.0	0.0	0.0	0,0,0
5421	6.58e-03	8.90e-03	8.26e-03	176,176,199	0.0	0.0	0.0	0,0,0
5422	6.61e-03	9.34e-03	8.29e-03	176,176,199	0.0	0.0	0.0	0,0,0
5423	6.75e-03	0.01	8.45e-03	176,176,199	0.0	0.0	0.0	0,0,0
5424	6.74e-03	0.01	8.44e-03	176,176,199	0.0	0.0	0.0	0,0,0
5425	6.74e-03	0.01	8.44e-03	176,176,199	0.0	0.0	0.0	0,0,0
5426	6.71e-03	0.01	8.40e-03	176,176,199	0.0	0.0	0.0	0,0,0
5427	6.60e-03	8.98e-03	8.28e-03	176,176,199	0.0	0.0	0.0	0,0,0
5428	6.55e-03	8.43e-03	8.22e-03	176,176,199	0.0	0.0	0.0	0,0,0
5429	6.68e-03	9.13e-03	8.35e-03	176,176,199	0.0	0.0	0.0	0,0,0
5430	6.65e-03	8.70e-03	8.31e-03	176,176,199	0.0	0.0	0.0	0,0,0
5431	6.55e-03	8.72e-03	8.19e-03	176,176,199	0.0	0.0	0.0	0,0,0
5432	6.56e-03	9.09e-03	8.19e-03	176,176,199	0.0	0.0	0.0	0,0,0
5433	6.23e-03	8.60e-03	7.80e-03	176,176,199	0.0	0.0	0.0	0,0,0
5434	6.28e-03	9.03e-03	7.86e-03	176,176,199	0.0	0.0	0.0	0,0,0

5435	6.17e-03	0.01	7.70e-03	176,176,199	0.0	0.0	0.0	0,0,0
5436	6.18e-03	0.01	7.72e-03	176,176,199	0.0	0.0	0.0	0,0,0
5437	6.01e-03	0.01	7.49e-03	176,176,199	0.0	0.0	0.0	0,0,0
5438	5.99e-03	0.01	7.47e-03	176,176,199	0.0	0.0	0.0	0,0,0
5439	5.74e-03	9.35e-03	7.16e-03	176,176,199	0.0	0.0	0.0	0,0,0
5440	5.70e-03	8.91e-03	7.10e-03	176,176,199	0.0	0.0	0.0	0,0,0
5441	5.61e-03	9.38e-03	6.96e-03	176,176,199	0.0	0.0	0.0	0,0,0
5442	5.62e-03	9.01e-03	6.98e-03	176,176,199	0.0	0.0	0.0	0,0,0
5443	5.41e-03	8.64e-03	6.59e-03	176,176,199	0.0	0.0	0.0	0,0,0
5444	5.36e-03	9.00e-03	6.61e-03	176,176,199	0.0	0.0	0.0	0,0,0
5445	4.71e-03	7.95e-03	5.81e-03	176,176,199	0.0	0.0	0.0	0,0,0
5446	4.83e-03	8.64e-03	5.94e-03	176,176,199	0.0	0.0	0.0	0,0,0
5447	4.80e-03	9.69e-03	5.62e-03	176,176,199	0.0	0.0	0.0	0,0,0
5448	4.68e-03	0.01	5.62e-03	176,176,199	0.0	0.0	0.0	0,0,0
5449	5.16e-03	0.01	6.07e-03	176,176,199	0.0	0.0	0.0	0,0,0
5450	4.96e-03	0.01	5.87e-03	176,176,199	0.0	0.0	0.0	0,0,0
5451	5.79e-03	0.01	6.76e-03	172,176,197	0.0	0.0	0.0	0,0,0
5452	9.48e-03	0.02	0.01	172,172,197	0.0	0.0	0.0	0,0,0
5453	5.65e-03	9.79e-03	6.66e-03	176,176,199	0.0	0.0	0.0	0,0,0
5454	8.16e-03	0.01	9.49e-03	172,172,197	0.0	0.0	0.0	0,0,0
5455	8.11e-03	0.02	9.93e-03	172,176,197	0.0	0.0	0.0	0,0,0
5456	5.64e-03	0.01	6.75e-03	176,176,199	0.0	0.0	0.0	0,0,0
5457	5.91e-03	0.01	6.99e-03	176,176,199	0.0	0.0	0.0	0,0,0
5458	5.64e-03	0.01	6.77e-03	172,176,197	0.0	0.0	0.0	0,0,0
5459	5.74e-03	0.01	6.82e-03	176,176,199	0.0	0.0	0.0	0,0,0
5460	5.53e-03	0.01	6.62e-03	172,176,197	0.0	0.0	0.0	0,0,0
5461	5.57e-03	9.49e-03	6.66e-03	172,176,197	0.0	0.0	0.0	0,0,0
5462	5.46e-03	9.48e-03	6.55e-03	172,176,197	0.0	0.0	0.0	0,0,0
5463	5.93e-03	9.46e-03	7.09e-03	172,176,197	0.0	0.0	0.0	0,0,0
5464	5.85e-03	9.64e-03	6.99e-03	172,176,197	0.0	0.0	0.0	0,0,0
5465	5.88e-03	9.50e-03	7.13e-03	172,176,199	0.0	0.0	0.0	0,0,0
5466	5.76e-03	9.67e-03	7.01e-03	172,176,199	0.0	0.0	0.0	0,0,0
5467	5.76e-03	9.90e-03	7.19e-03	176,176,199	0.0	0.0	0.0	0,0,0
5468	5.64e-03	0.01	7.06e-03	176,176,199	0.0	0.0	0.0	0,0,0
5469	5.95e-03	0.01	7.44e-03	176,176,199	0.0	0.0	0.0	0,0,0
5470	5.89e-03	0.01	7.38e-03	176,176,199	0.0	0.0	0.0	0,0,0
5471	6.09e-03	0.01	7.64e-03	176,176,199	0.0	0.0	0.0	0,0,0
5472	6.07e-03	0.01	7.61e-03	176,176,199	0.0	0.0	0.0	0,0,0
5473	6.22e-03	9.82e-03	7.80e-03	176,176,199	0.0	0.0	0.0	0,0,0
5474	6.19e-03	9.78e-03	7.77e-03	176,176,199	0.0	0.0	0.0	0,0,0
5475	6.64e-03	9.67e-03	8.31e-03	176,176,199	0.0	0.0	0.0	0,0,0
5476	6.60e-03	9.71e-03	8.26e-03	176,176,199	0.0	0.0	0.0	0,0,0
5477	6.64e-03	9.63e-03	8.32e-03	176,176,199	0.0	0.0	0.0	0,0,0
5478	6.67e-03	9.71e-03	8.35e-03	176,176,199	0.0	0.0	0.0	0,0,0
5479	6.42e-03	9.69e-03	8.07e-03	176,176,199	0.0	0.0	0.0	0,0,0
5480	6.43e-03	9.84e-03	8.08e-03	176,176,199	0.0	0.0	0.0	0,0,0
5481	6.50e-03	0.01	8.16e-03	176,176,199	0.0	0.0	0.0	0,0,0
5482	6.50e-03	0.01	8.16e-03	176,176,199	0.0	0.0	0.0	0,0,0
5483	6.48e-03	0.01	8.14e-03	176,176,199	0.0	0.0	0.0	0,0,0
5484	6.47e-03	0.01	8.13e-03	176,176,199	0.0	0.0	0.0	0,0,0
5485	6.41e-03	9.44e-03	8.06e-03	176,176,199	0.0	0.0	0.0	0,0,0
5486	6.40e-03	9.39e-03	8.04e-03	176,172,199	0.0	0.0	0.0	0,0,0
5487	6.56e-03	9.65e-03	8.20e-03	176,176,199	0.0	0.0	0.0	0,0,0
5488	6.55e-03	9.62e-03	8.20e-03	176,176,199	0.0	0.0	0.0	0,0,0
5489	6.44e-03	9.72e-03	8.06e-03	176,172,199	0.0	0.0	0.0	0,0,0
5490	6.44e-03	9.90e-03	8.05e-03	176,176,199	0.0	0.0	0.0	0,0,0
5491	6.05e-03	0.01	7.59e-03	176,176,199	0.0	0.0	0.0	0,0,0
5492	6.09e-03	0.01	7.64e-03	176,176,199	0.0	0.0	0.0	0,0,0
5493	5.90e-03	0.01	7.38e-03	176,176,199	0.0	0.0	0.0	0,0,0
5494	5.92e-03	0.01	7.41e-03	176,176,199	0.0	0.0	0.0	0,0,0
5495	5.80e-03	0.01	7.15e-03	172,176,199	0.0	0.0	0.0	0,0,0
5496	5.89e-03	0.01	7.18e-03	172,176,199	0.0	0.0	0.0	0,0,0
5497	5.85e-03	0.01	7.03e-03	172,176,197	0.0	0.0	0.0	0,0,0
5498	5.94e-03	0.01	7.13e-03	172,176,197	0.0	0.0	0.0	0,0,0
5499	5.99e-03	0.01	7.17e-03	172,176,197	0.0	0.0	0.0	0,0,0
5500	6.03e-03	9.56e-03	7.22e-03	172,176,197	0.0	0.0	0.0	0,0,0
5501	5.94e-03	9.69e-03	7.10e-03	172,176,197	0.0	0.0	0.0	0,0,0
5502	6.07e-03	9.88e-03	7.25e-03	172,176,197	0.0	0.0	0.0	0,0,0
5503	5.91e-03	9.92e-03	7.10e-03	172,176,197	0.0	0.0	0.0	0,0,0
5504	5.99e-03	9.61e-03	7.20e-03	172,176,197	0.0	0.0	0.0	0,0,0
5505	5.78e-03	9.96e-03	6.93e-03	172,176,197	0.0	0.0	0.0	0,0,0
5506	5.92e-03	9.94e-03	7.09e-03	172,176,197	0.0	0.0	0.0	0,0,0
5507	5.95e-03	0.01	7.16e-03	172,176,197	0.0	0.0	0.0	0,0,0
5508	6.12e-03	0.01	7.36e-03	172,176,197	0.0	0.0	0.0	0,0,0
5509	5.67e-03	0.01	6.80e-03	176,176,199	0.0	0.0	0.0	0,0,0
5510	8.23e-03	0.02	0.01	172,176,197	0.0	0.0	0.0	0,0,0
5511	8.44e-03	0.01	9.82e-03	172,172,197	0.0	0.0	0.0	0,0,0
5512	7.32e-03	8.18e-03	8.53e-03	172,176,197	0.0	0.0	0.0	0,0,0
5513	8.82e-03	0.02	0.01	176,176,199	0.0	0.0	0.0	0,0,0

5514	5.83e-03	0.01	6.89e-03	172,176,197	0.0	0.0	0.0	0,0,0
5515	5.85e-03	0.01	6.91e-03	176,176,199	0.0	0.0	0.0	0,0,0
5516	5.66e-03	9.89e-03	6.65e-03	172,176,197	0.0	0.0	0.0	0,0,0
5517	5.63e-03	9.74e-03	6.61e-03	176,176,199	0.0	0.0	0.0	0,0,0
5518	5.56e-03	9.37e-03	6.51e-03	176,176,199	0.0	0.0	0.0	0,0,0
5519	5.52e-03	9.40e-03	6.48e-03	176,176,197	0.0	0.0	0.0	0,0,0
5520	5.47e-03	9.11e-03	6.41e-03	176,176,199	0.0	0.0	0.0	0,0,0
5521	5.61e-03	9.59e-03	6.67e-03	176,176,199	0.0	0.0	0.0	0,0,0
5522	5.49e-03	9.16e-03	6.50e-03	176,176,199	0.0	0.0	0.0	0,0,0
5523	5.55e-03	9.04e-03	6.58e-03	172,176,197	0.0	0.0	0.0	0,0,0
5524	5.40e-03	9.11e-03	6.39e-03	172,176,197	0.0	0.0	0.0	0,0,0
5525	5.39e-03	9.04e-03	6.39e-03	172,176,197	0.0	0.0	0.0	0,0,0
5526	5.43e-03	8.94e-03	6.34e-03	176,176,199	0.0	0.0	0.0	0,0,0
5527	5.40e-03	9.15e-03	6.40e-03	172,176,197	0.0	0.0	0.0	0,0,0
5528	5.42e-03	9.03e-03	6.51e-03	176,176,199	0.0	0.0	0.0	0,0,0
5529	5.38e-03	9.10e-03	6.49e-03	172,176,199	0.0	0.0	0.0	0,0,0
5530	5.37e-03	8.96e-03	6.84e-03	176,176,199	0.0	0.0	0.0	0,0,0
5531	5.34e-03	8.92e-03	6.78e-03	172,176,199	0.0	0.0	0.0	0,0,0
5532	5.45e-03	8.75e-03	7.10e-03	176,176,199	0.0	0.0	0.0	0,0,0
5533	5.50e-03	9.10e-03	7.06e-03	176,176,199	0.0	0.0	0.0	0,0,0
5534	5.73e-03	8.76e-03	7.44e-03	176,176,199	0.0	0.0	0.0	0,0,0
5535	5.81e-03	8.84e-03	7.58e-03	176,176,199	0.0	0.0	0.0	0,0,0
5536	5.72e-03	8.92e-03	7.43e-03	176,176,199	0.0	0.0	0.0	0,0,0
5537	5.54e-03	8.80e-03	7.27e-03	176,176,199	0.0	0.0	0.0	0,0,0
5538	5.70e-03	8.68e-03	7.42e-03	176,176,199	0.0	0.0	0.0	0,0,0
5539	5.56e-03	8.91e-03	7.29e-03	172,176,197	0.0	0.0	0.0	0,0,0
5540	5.77e-03	8.72e-03	7.49e-03	176,176,199	0.0	0.0	0.0	0,0,0
5541	5.63e-03	8.83e-03	7.37e-03	176,176,199	0.0	0.0	0.0	0,0,0
5542	5.74e-03	8.71e-03	7.46e-03	176,176,199	0.0	0.0	0.0	0,0,0
5543	5.59e-03	8.74e-03	7.32e-03	176,176,199	0.0	0.0	0.0	0,0,0
5544	5.68e-03	8.67e-03	7.39e-03	176,176,199	0.0	0.0	0.0	0,0,0
5545	5.45e-03	8.88e-03	7.03e-03	176,176,199	0.0	0.0	0.0	0,0,0
5546	5.65e-03	8.70e-03	7.33e-03	176,176,199	0.0	0.0	0.0	0,0,0
5547	5.51e-03	8.82e-03	7.21e-03	176,176,199	0.0	0.0	0.0	0,0,0
5548	5.48e-03	8.53e-03	7.10e-03	176,176,199	0.0	0.0	0.0	0,0,0
5549	5.50e-03	8.53e-03	7.01e-03	172,176,199	0.0	0.0	0.0	0,0,0
5550	5.54e-03	8.49e-03	6.74e-03	172,172,199	0.0	0.0	0.0	0,0,0
5551	5.49e-03	8.63e-03	6.62e-03	172,176,199	0.0	0.0	0.0	0,0,0
5552	5.55e-03	8.55e-03	6.55e-03	172,176,197	0.0	0.0	0.0	0,0,0
5553	5.49e-03	8.67e-03	6.48e-03	172,176,197	0.0	0.0	0.0	0,0,0
5554	5.57e-03	8.58e-03	6.57e-03	172,176,197	0.0	0.0	0.0	0,0,0
5555	5.49e-03	8.63e-03	6.51e-03	172,176,197	0.0	0.0	0.0	0,0,0
5556	5.60e-03	8.54e-03	6.63e-03	172,176,197	0.0	0.0	0.0	0,0,0
5557	5.49e-03	8.74e-03	6.50e-03	172,176,197	0.0	0.0	0.0	0,0,0
5558	5.55e-03	8.89e-03	6.57e-03	172,176,197	0.0	0.0	0.0	0,0,0
5559	5.47e-03	8.99e-03	6.46e-03	176,176,199	0.0	0.0	0.0	0,0,0
5560	5.57e-03	8.84e-03	6.57e-03	176,176,199	0.0	0.0	0.0	0,0,0
5561	5.51e-03	8.81e-03	6.56e-03	172,176,197	0.0	0.0	0.0	0,0,0
5562	5.64e-03	9.13e-03	6.71e-03	172,176,197	0.0	0.0	0.0	0,0,0
5563	5.39e-03	9.07e-03	6.39e-03	172,176,197	0.0	0.0	0.0	0,0,0
5564	5.57e-03	9.31e-03	6.61e-03	172,176,197	0.0	0.0	0.0	0,0,0
5565	5.56e-03	9.68e-03	6.62e-03	172,176,197	0.0	0.0	0.0	0,0,0
5566	5.79e-03	0.01	6.91e-03	172,176,197	0.0	0.0	0.0	0,0,0
5567	5.75e-03	0.01	6.77e-03	172,176,197	0.0	0.0	0.0	0,0,0
5568	9.03e-03	0.02	0.01	176,176,199	0.0	0.0	0.0	0,0,0
5569	7.61e-03	8.65e-03	8.87e-03	172,176,197	0.0	0.0	0.0	0,0,0

Guscio	**rRfck**	**rRfyk**	**rPfck**	**wR**	**wF**	**wP**
	0.37	0.60	0.44	0.11	0.16	0.15